Tel: 886-2-66296288
Fax: 886-2-29174598
URL: http://www.princeton.com.tw

DESCRIPTION

PT2260 is a remote control encoder paired with either PT2270 or PT2272 utilizing CMOS Technology. It encodes data and address pins into a serial coded waveform suitable for RF modulation. PT2260 has a maximum of 10 bits tri-state address pins providing up to 59,049 (or 3^{10}) address codes; thereby, drastically reducing any code collision and unauthorized code scanning possibilities.

PT2260 is one of the first generation of Encoder/Decoder ICs that utilizes the unique PTC Technology. When paired with PT2270, this encoder/decoder (PT2260/PT2270) pair can operate at very wide temperature range (see Features). Thus, this very important feature enables your Encoder/Decoder to operate under the worst environmental condition.

FEATURES

- High performance CMOS technology
- Low power consumption
- Very high noise immunity
- Wide operating temperature range: -40℃ ~ 85℃
- 8 or 10 Tri-State code address pins
- 2 or 4 data pins
- Wider range of operating voltage: 1.8 ~ 10.0V
- Single resistor oscillator
- Least external components

APPLICATIONS

- Home/Car security system
- Garage door controller
- Remote fan controller
- Remote control toys

BLOCK DIAGRAM

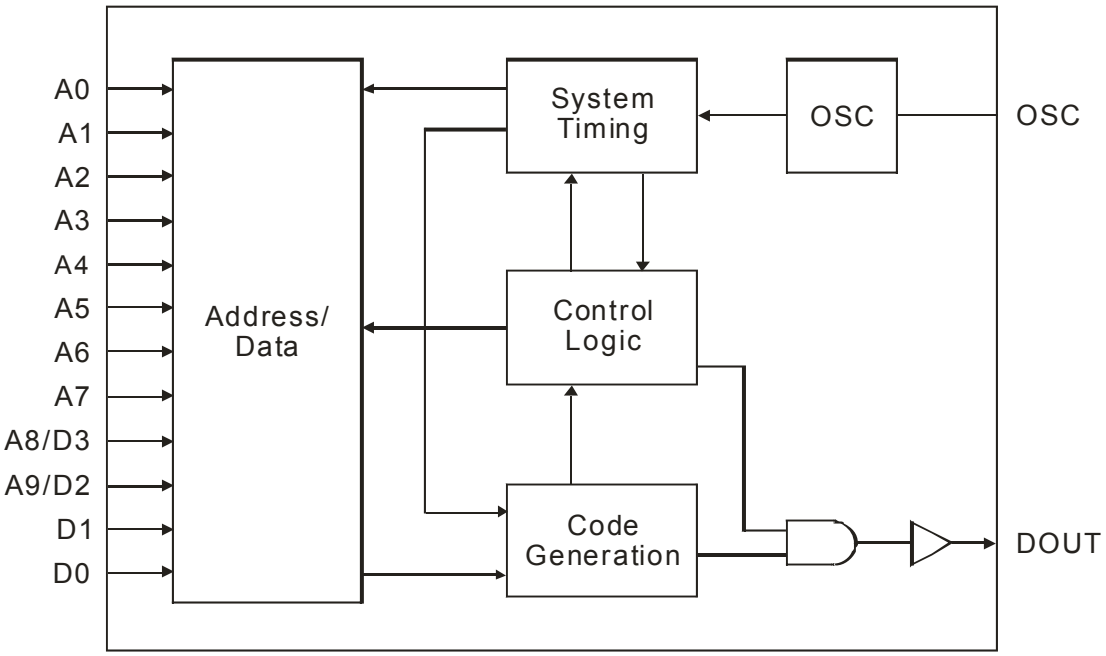

PIN CONFIGURATION

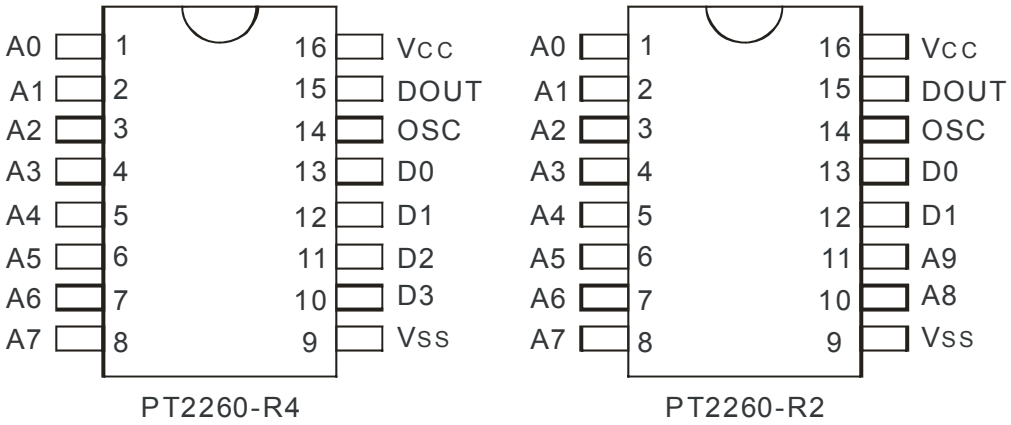

Tel: 886-2-66296288
Fax: 886-2-29174598
URL: http://www.princeton.com.tw

PIN CONFIGURATION

Pin Name	I/O	Description	Pin No.
A0 ~ A7	I	Code Address Pin Nos. 0 ~ 7 These eight tri-state pins are detected by PT2260 to determine the encoded waveform bit 0 ~ bit 7. Each bit can be set to “0”, “1”, or “f” (floating).	1 ~ 8
A8/D3 ~ A9/D2	I/PL*	Code Address Pin No. 8 ~ 9/Data Pin No. 3 ~ 2. These two tri-state pins are detected by PT2260 to determine the encoded waveform bit 8 ~ bit 9. When these pins are used as address pins (as in PT2260-R2), they can be set to “0”, “1”, or “f” (floating). When these pins are used as data pins (as in PT2260-R4), they can only be set to “0” or “1”.	10 ~ 11
D1, D0	I/PL	Data Pin No. 1/0. These pins can only be set to “0” or “1”	12, 13
OSC	I	Oscillator Pin A resistor connected between the Osc Pin and the Vcc determines the fundamental frequency of the PT2260	14
DOUT	O	Data Output Pin. The encoded waveform is serially outputted to this pin. When PT2260 is not transmitting, DOUT outputs low (Vss) voltage	15
Vcc		Positive Power Supply	16
Vss		Negative Power Supply	9

Note:
PL -- Pull-low Resistor is connected internally
PL* -- If those two pins are used as Data Pins (PT2260-R2), pull-low resistor is connected internally; otherwise, no pull-low resistor is connected.

FUNCTION DESCRIPTION

PT2260 encodes the code address and data set at A0 ~ A7, A8/D3, A9/D2, D1 and D0 into a special waveform and outputs it to the DOUT when any of the data pins is tied to high. This waveform is fed to the RF modulator for transmission. The transmitted radio frequency is received by the RF demodulator and reshaped into the special waveform. PT2270 (or PT2272) is then used to decode the waveform and set the corresponding output pin(s). Thus completing a remote control encoding and decoding function.

RF OPERATION

CODE BITS

A Code Bit is the basic component of the encoded waveform, and can be classified as either an AD (Address/Data) Bit or a SYNC (Synchronous) Bit.

Address/Data (AD) Bit Waveform

An AD Bit can be designated as Bit “0”, “1”, or “f” if it is in low, high or floating state respectively. One bit waveform consists of 2 pulse cycles. Each pulse cycle has 512 oscillating clock periods. For further details, please refer to the diagram below:

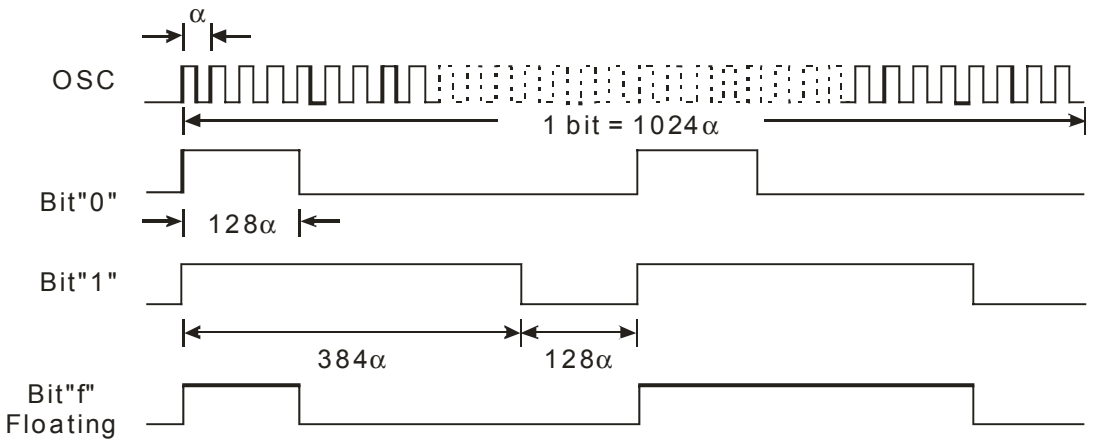

where: α=Oscillating Clock Period

Synchronous (Sync.) Bit Waveform

The Synchronous Bit Waveform is 4 bits long with 1/8 bit width pulse. Please refer to the diagram below:

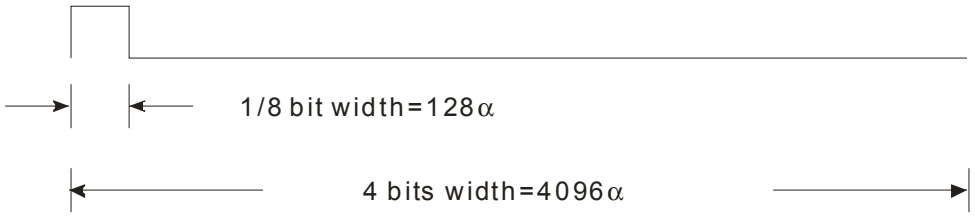

Note: 1 bit=1024α

CODE WORD

A group of Code Bits is called a Code Word. A Code Word consists of 12 AD bits followed by one Sync. Bit. The 12 AD bits are determined by the corresponding states of A0 ~ A7, A8/D3, A9/D2, D1 and D0 pins at the time of transmission. When the Data Type of PT2260 is used, the address bits will decrease accordingly.

For example: In the 4-Data Type where the address has eight (8) bits, the transmitting format is:

PT2260 has a maximum of ten (10) Address Bits. The following diagram shows the code bits with their corresponding pins.

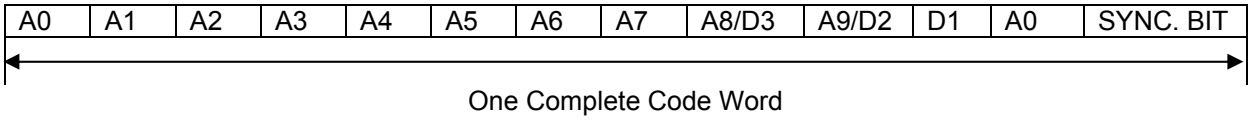

2 Data: A0 A1 A2 A3 A4 A5 A6 A7 A8 A9 D1 D0 Sync Bit
4 Data: A0 A1 A2 A3 A4 A5 A6 A7 D3 D2 D1 D0 Sync Bit

The Code Bits A0 ~ A7, A8/D3, A9/D2, D1 and D0 are determined by the states set at these pins. For example, when the A0 (Pin No.1) is set to “1” (Vcc), the Code Bit A0 is synthesized as “1” bit. In the same manner, when it (A0 Pin) is set to “0” (Vss) or left floating, the Code Bit A0 is synthesized as a “0” or “f” bit respectively.

When PT2260 detects “1” on any of the Data pins, it outputs a Code Word at DOUT. If the Data Pin is still in high state (“1”) the time the Code Word transmission ends, PT2260 outputs the same Code Word. Please refer to the diagram below:

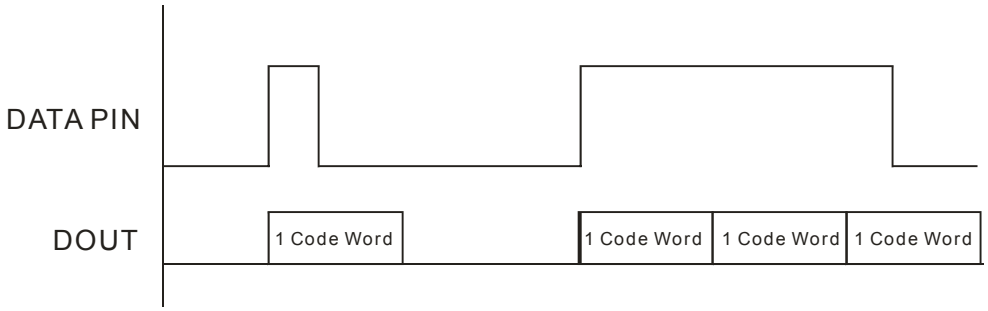

SINGLE OSCILLATOR

The built-in oscillator circuitry of PT2260 allows a precision oscillator to be constructed by connecting an external resistor between OSC and Vcc pins. For PT2270 (or PT2272) to decode correctly the received waveform, the oscillator frequency of PT2270 (or PT2272) must be 1/16 ~ 4 (or 1/16 ~ 1/4) times that of the transmitting PT2260. The typical oscillator frequency with various resistor values for PT2260, PT2270, and PT2272 are shown below:

Encoder (PT2260) OSC Frequency

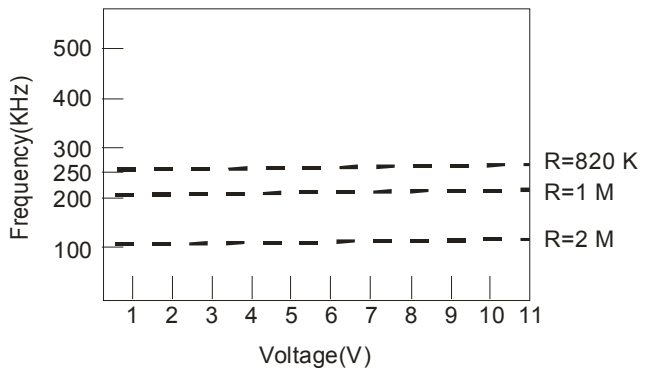

Decoder (PT2270) OSC Frequency

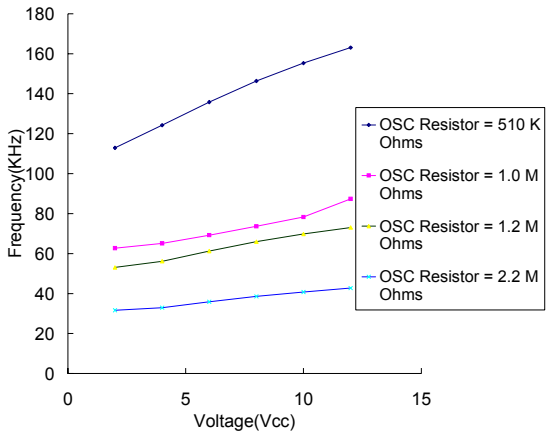

Decoder (PT2272) OSC Frequency

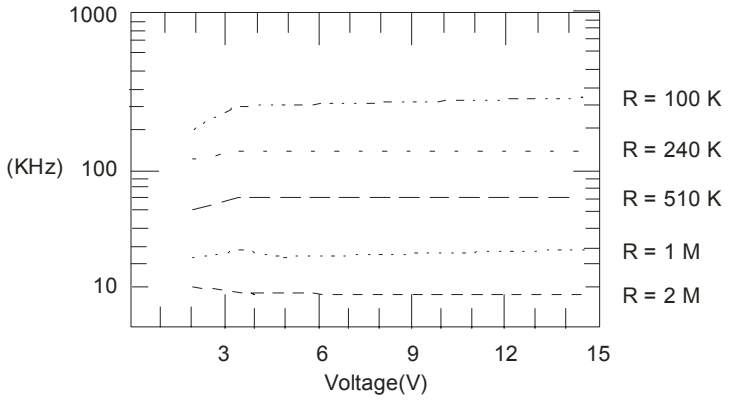

Suggested Oscillator resistor values are shown below.

PT2260	PT2272	PT2270
820KΩ	510KΩ	1MΩ
1MΩ	620KΩ	1.2MΩ
2MΩ	1.2MΩ	2.2MΩ

OPERATION FLOWCHART

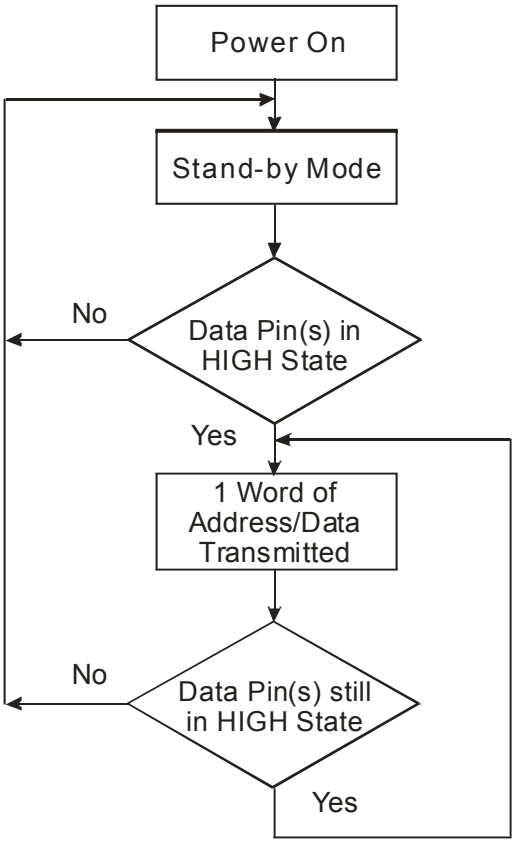

Tel: 886-2-66296288
Fax: 886-2-29174598
URL: http://www.princeton.com.tw

ABSOLUTE MAXIMUM RATINGS

Parameter	Symbol	Conditions	Ratings	Unit
Supply voltage	Vcc		-0.3 ~ 10.0	V
Input voltage	VI		-0.3 ~ Vcc+0.3	V
Output voltage	VO		-0.3 ~ Vcc+0.3	V
Maximum power dissipation	Pa	Vcc=10V	500	mW
Operating temperature	Topr		-40 ~ +85	℃
Storage temperature	Tstg		-65 ~ +150	℃

DC ELECTRICAL CHARACTERISTICS

Parameter	Symbol	Test Conditions	Min.	Typ.	Max.	Unit
Supply voltage	Vcc		1.8		10	V
Stand-by current	Isb	Vcc=5V, OSC stops All input pins open	0.2	0.5	0.8	μA
DOUT output driving current	I_{OH}	Vcc=3V, V_{OH}=1.5V Vcc=10V, V_{OH}=5 V	2.5 20			mA
DOUT output sinking current	I_{OL}	Vcc=3V, V_{OL}=1.5V Vcc=10V, V_{OL}=5V	4.6 24			mA
Operation current	Iop	Vcc=1.8V Vcc=6.0V Vcc=10V	0.01 0.50 1.60			mA

APPLICATION CIRCUIT

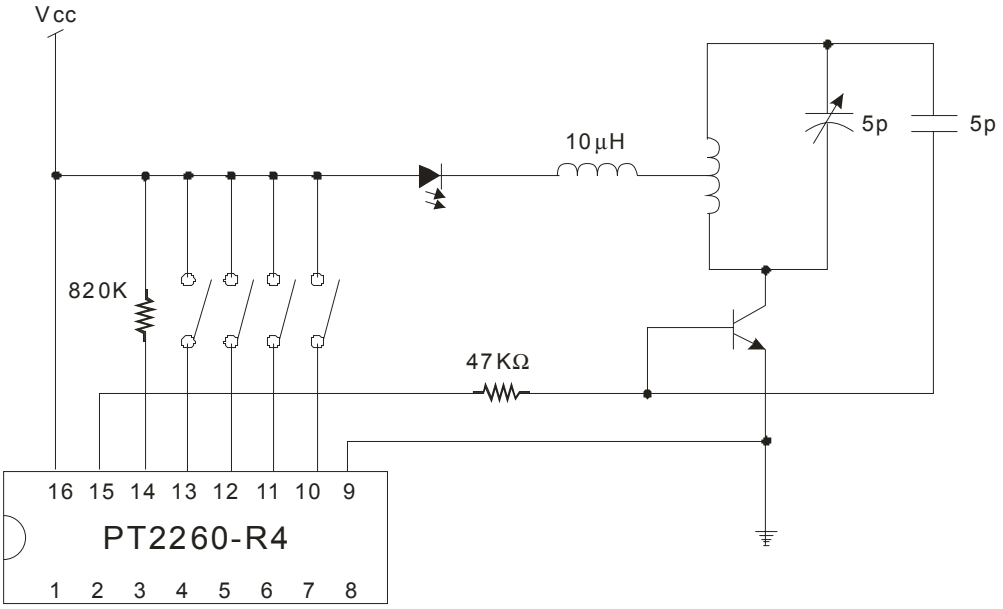

UHF Band 4-Data Transmitter Circuit is recommended.

Tel: 886-2-66296288
Fax: 886-2-29174598
URL: http://www.princeton.com.tw

ORDER INFORMATION

Valid Part Number	Package Type	Top Code
PT2260-D	16 Pins, DIP, 300mil	PT2260-D
PT2260-R2	16 Pins, DIP, 300mil	PT2260-R2
PT2260-R4	16 Pins, DIP, 300mil	PT2260-R4
PT2260-R2S	16 Pins, SOP, 150mil	PT2260-R2S
PT2260-R4S	16 Pins, SOP, 150mil	PT2260-R4S

Notes:
1. R: RF Application.
2. 2: 2 Data Pins; 4: 4 Data Pins.

Tel: 886-2-66296288
Fax: 886-2-29174598
URL: http://www.princeton.com.tw

PACKAGE INFORMATION

16 PINS, DIP, 300MIL

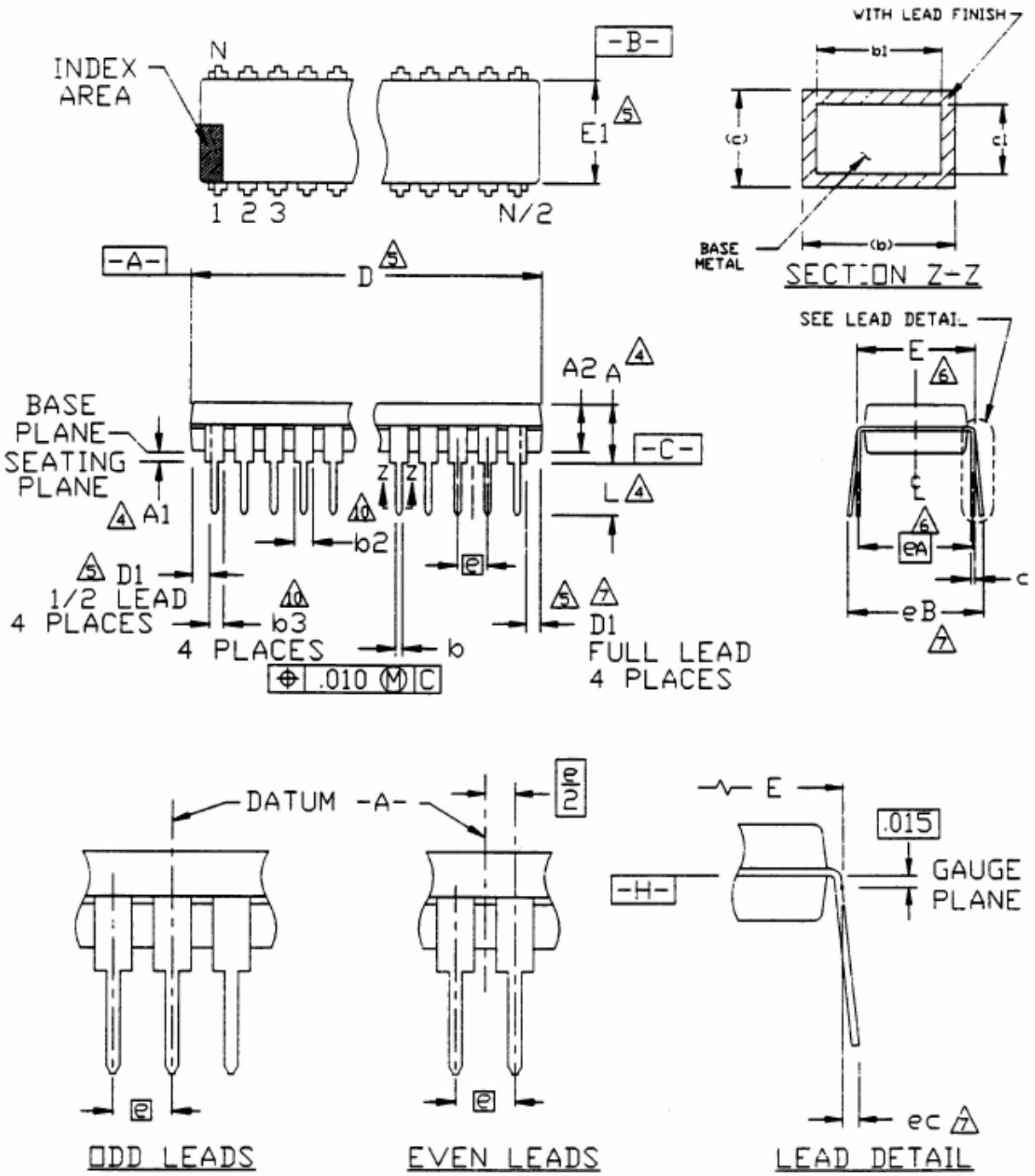

Tel: 886-2-66296288
Fax: 886-2-29174598
URL: http://www.princeton.com.tw

Symbol	Min.	Nom.	Max.
A	-	-	0.210
A1	0.015	-	-
A2	0.115	0.130	0.195
b	0.014	0.018	0.022
b1	0.014	0.018	0.020
b2	0.045	0.060	0.070
b3	0.030	0.039	0.045
c	0.008	0.010	0.014
c1	0.008	0.010	0.011
D	0.780	0.790	0.800
D1	0.005	-	-
E	0.300	0.310	0.325
E1	0.240	0.250	0.280
e	0.100 BSC.		
eA	0.300 BSC.		
eB	-	-	0.430
eC	0.000	-	0.060
L	0.115	0.130	0.150

Notes:
1. All dimensions are in INCHES.
2. Dimensioning and tolerancing per ANSI Y14.5M-1982.
3. Dimensions “A”, “A1” and “L” are measured with the package seated in JEDEC Seating Plane Gauge GS-3.
4. “D”, “D1” and “E1” dimensions do not include mold flash or protrusions. Mold flash or protrusions shall not exceed 0.010 inch.
5. “E” and “eA” measured with the leads constrained to be perpendicular to datum -c-. “eB” and “eC” are measured at the lead tips with the loads unconstrained.
6. “N” is the number of terminal positions. (N=16)
7. Pointed or rounded lead tips are preferred to ease insertion.
8. “b2” and “b3” maximum dimensions are not include dambar protrusions. Dambar protrusions shall not exceed 0.010 inch (0.25 mm).
9. Distance between leads including Dambar protrusions to be 0.005 inch minimum.
10. Datum plane -H- coincident with the bottom of lead, where lead exits body.
11. Refer to JEDEC MS-001 Variation AB.

JEDEC is the trademark of JEDEC SOLID STATE TECHNOLOGY ASSOCIATION.

16 PINS, SOP, 150MIL

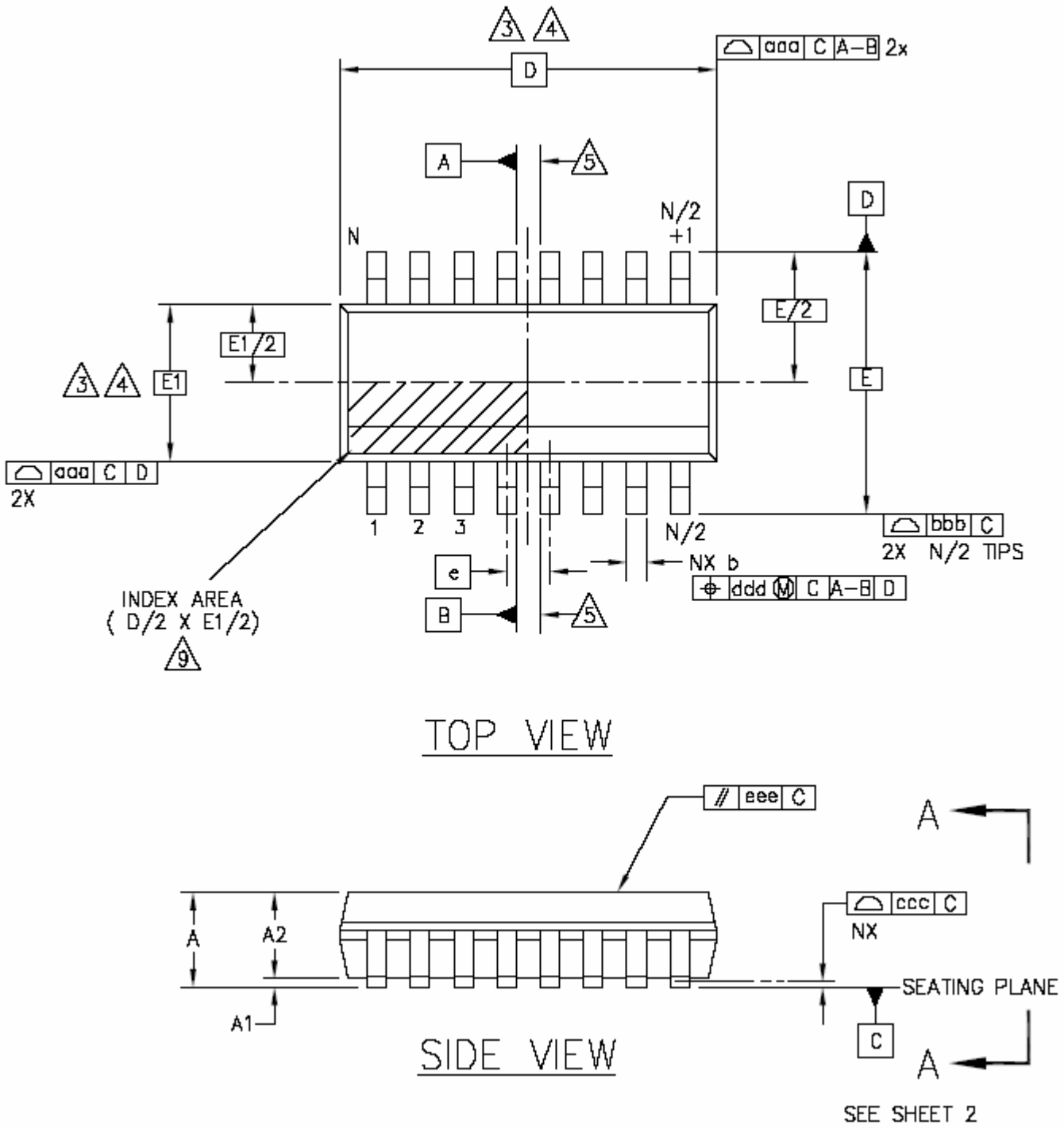

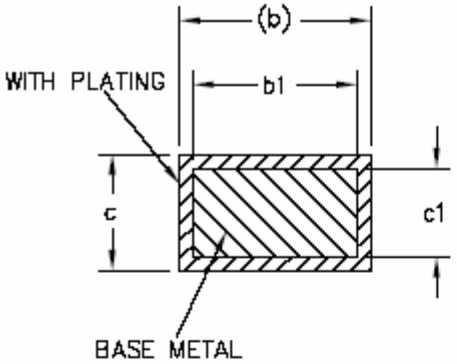

SECTION B–B
7

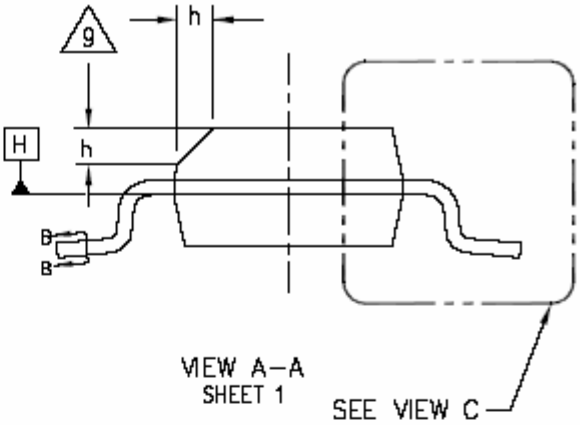

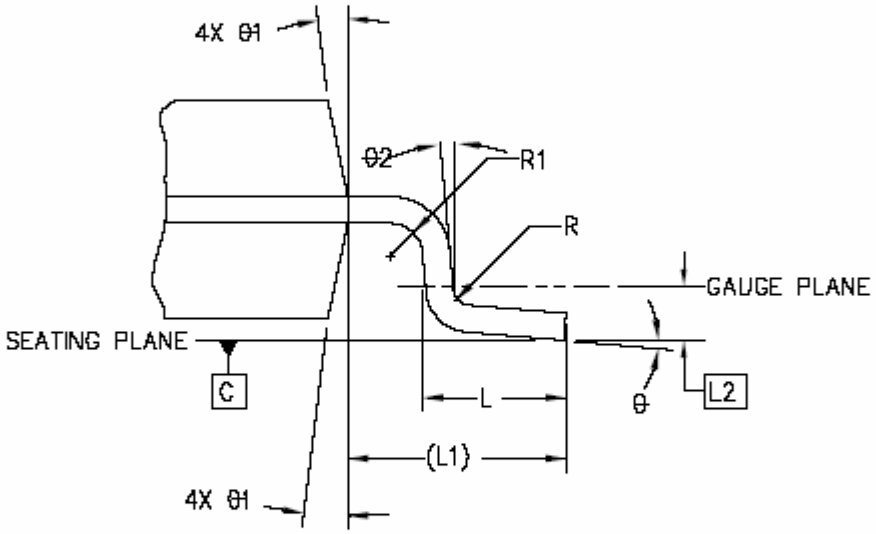

VIEW C

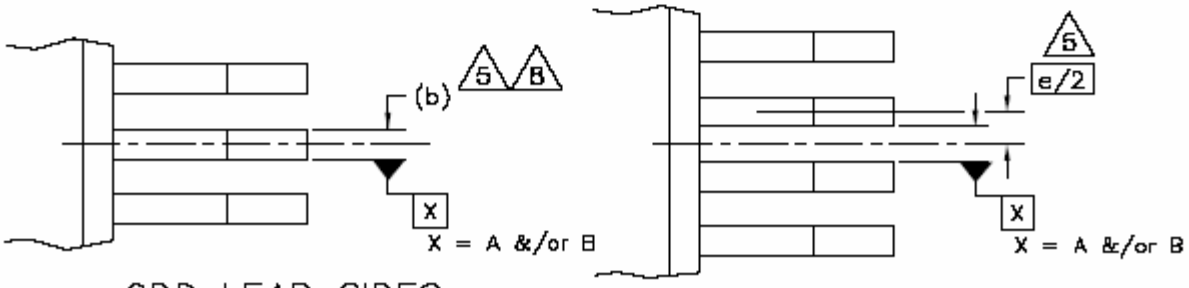

ODD LEAD SIDES
TOPVIEW

EVEN LEAD SIDES
TOPVIEW

Tel: 886-2-66296288
Fax: 886-2-29174598
URL: http://www.princeton.com.tw

Symbol	Min.	Typ.	Max.
A	1.35	-	1.75
A1	0.10	-	0.25
A2	1.25	-	1.65
b	0.31	-	0.51
b1	0.28	-	0.48
c	0.17	-	0.25
c1	0.17	-	0.23
D	9.90 BSC.		
E	6.00 BSC.		
E1	3.90 BSC.		
e	1.27 BSC.		
L	0.40	-	1.27
L1	1.04 REF.		
L2	0.25 BSC.		
R	0.07	-	-
R1	0.07		-
h	0.25	-	0.50
θ	0°	-	8°
θ1	5°	-	15°
θ2	0°	-	-

Notes:
1. Dimensioning and tolerancing per ANSI Y 14.5M-1994
2. Controlling Dimension: MILLIMETERS.
3. Dimension D does not include mold flash protrusions or gate burrs. Mold flash, protrusions or gate burrs shall not exceed 0.15 mm (0.006 in) per end. Dimension E1 does not include interlead flash or protrusion. Interlead flash or protrusion shall not exceed 0.25mm per side. D and E1 dimensions are determined at datum H.
4. The package top may be smaller than the package bottom. Dimensions D and E1 are determined at the outermost extremes of the plastic body exclusive of mold flash, tie bar burrs, gate burrs and interlead flash, but including any mismatch between the top and bottom of the plastic body.
5. Datums A & B to be determined at datum H.
6. N is the number of terminal positions. (N=16)
7. The dimensions apply to the flat section of the lead between 0.10 to 0.25mm from the lead tip.
8. Dimension “b” does not include dambar protrusion. Allowable dambar protrusion shall be 0.10mm total in excess of the “b” dimension at maximum material condition. The dambar cannot be located on the lower radius of the foot.
9. This chamfer feature is optional. If it is not present, then a pin 1 identifier must be located within the index area indicated.
10. Refer to JEDEC MS-012, Variation AC.

JEDEC is the registered trademark of JEDEC SOLID STATE TECHNOLOGY ASSOCIATION.

OCEAN CHIPS
Океан Электроники
Поставка электронных компонентов

Компания «Океан Электроники» предлагает заключение долгосрочных отношений при поставках импортных электронных компонентов на взаимовыгодных условиях!

Наши преимущества:

- Поставка оригинальных импортных электронных компонентов напрямую с производств Америки, Европы и Азии, а так же с крупнейших складов мира;
- Широкая линейка поставок активных и пассивных импортных электронных компонентов (более 30 млн. наименований);
- Поставка сложных, дефицитных, либо снятых с производства позиций;
- Оперативные сроки поставки под заказ (от 5 рабочих дней);
- Экспресс доставка в любую точку России;
- Помощь Конструкторского Отдела и консультации квалифицированных инженеров;
- Техническая поддержка проекта, помощь в подборе аналогов, поставка прототипов;
- Поставка электронных компонентов под контролем ВП;
- Система менеджмента качества сертифицирована по Международному стандарту ISO 9001;
- При необходимости вся продукция военного и аэрокосмического назначения проходит испытания и сертификацию в лаборатории (по согласованию с заказчиком);
- Поставка специализированных компонентов военного и аэрокосмического уровня качества (Xilinx, Altera, Analog Devices, Intersil, Interpoint, Microsemi, Actel, Aeroflex, Peregrine, VPT, Syfer, Eurofarad, Texas Instruments, MS Kennedy, Miteq, Cobham, E2V, MA-COM, Hittite, Mini-Circuits, General Dynamics и др.);

Компания «Океан Электроники» является официальным дистрибьютором и эксклюзивным представителем в России одного из крупнейших производителей разъемов военного и аэрокосмического назначения **«JONHON»**, а так же официальным дистрибьютором и эксклюзивным представителем в России производителя высокотехнологичных и надежных решений для передачи СВЧ сигналов **«FORSTAR»**.

AVIC JONHON

«JONHON» (основан в 1970 г.)

Разъемы специального, военного и аэрокосмического назначения:

(Применяются в военной, авиационной, аэрокосмической, морской, железнодорожной, горно- и нефтедобывающей отраслях промышленности)

«FORSTAR» (основан в 1998 г.)

ВЧ соединители, коаксиальные кабели, кабельные сборки и микроволновые компоненты:

(Применяются в телекоммуникациях гражданского и специального назначения, в средствах связи, РЛС, а так же военной, авиационной и аэрокосмической отраслях промышленности).

FORSTAR®

Телефон: 8 (812) 309-75-97 (многоканальный)
Факс: 8 (812) 320-03-32
Электронная почта: ocean@oceanchips.ru
Web: http://oceanchips.ru/
Адрес: 198099, г. Санкт-Петербург, ул. Калинина, д. 2, корп. 4, лит. А