MAX951–MAX954

Ultra-Low-Power, Single-Supply Op Amp + Comparator + Reference

General Description

The MAX951–MAX954 feature combinations of a micropower operational amplifier, comparator, and reference in an 8-pin package. In the MAX951 and MAX952, the comparator's inverting input is connected to an internal 1.2V ±2% bandgap reference. The MAX953 and MAX954 are offered without an internal reference. The MAX951/MAX952 operate from a single 2.7V to 7V supply with a typical supply current of 7µA, while the MAX953/MAX954 operate from 2.4V to 7V with a 5µA typical supply current. Both the op amp and comparator feature a common-mode input voltage range that extends from the negative supply rail to within 1.6V of the positive rail, as well as output stages that swing Rail-to-Rail®.

The op amps in the MAX951/MAX953 are internally compensated to be unity-gain stable, while the op amps in the MAX952/MAX954 feature 125kHz typical bandwidth, 66V/ms slew rate, and stability for gains of 10V/V or greater. These op amps have a unique output stage that enables them to operate with an ultra-low supply current while maintaining linearity under loaded conditions. In addition, they have been designed to exhibit good DC characteristics over their entire operating temperature range, minimizing input-referred errors.

The comparator output stage of these devices continuously sources as much as 40mA. The comparators eliminate power-supply glitches that commonly occur when changing logic states, minimizing parasitic feedback and making the devices easier to use. In addition, they contain ±3mV internal hysteresis to ensure clean output switching, even with slow-moving input signals.

Applications

- Instruments, Terminals, and Bar-Code Readers
- Battery-Powered Systems
- Low-Frequency, Local-Area Alarms/Detectors
- Photodiode Preamps
- Smart Cards
- Infrared Receivers for Remote Controls
- Smoke Detectors and Safety Sensors

Rail-to-Rail is a registered trademark of Nippon Motorola, Ltd.

Features

- Op Amp + Comparator + Reference in an 8-Pin µMAX Package (MAX951/MAX952)
- 7µA Typical Supply Current (Op Amp + Comparator + Reference)
- Comparator and Op Amp Input Range Includes Ground
- Outputs Swing Rail to Rail
- 2.4V to 7V Supply Voltage Range
- Unity-Gain Stable and 125kHz Decompensated A_V ≥ 10V/V Op Amp Options
- Internal 1.2V ±2% Bandgap Reference
- Internal Comparator Hysteresis
- Op Amp Capable of Driving up to 1000pF Load

Selector Guide

PART	INTERNAL 2% PRECISION REFERENCE	OP AMP GAIN STABILITY (V/V)	COMPARATOR	SUPPLY CURRENT (µA)
MAX951	Yes	1	Yes	7
MAX952	Yes	10	Yes	7
MAX953	No	1	Yes	5
MAX954	No	10	Yes	5

Pin Configuration

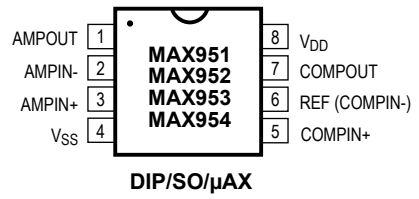

Typical Operating Circuit and Ordering Information appear at end of data sheet end of data sheet.

19-0431; Rev 3; 2/15

Absolute Maximum Ratings

Supply Voltage (V_{DD} to V_{SS}).....9V
Inputs
  Current (AMPIN_, COMPIN_).....20mA
  Voltage (AMPIN_, COMPIN_)...(V_{DD} + 0.3V) to (V_{SS} - 0.3V)
Outputs
  Current (AMPOUT, COMPOUT).....50mA
  Current (REF).....20mA
  Voltage (AMPOUT, COMPOUT, REF).....(V_{DD} + 0.3V) to (V_{SS} - 0.3V)
  Short-Circuit Duration (REF, AMPOUT).....Continuous
  Short-Circuit Duration (COMPOUT, V_{DD} to V_{SS} ≤ 7V)...1min
Continuous Power Dissipation (T_A = +70°C)
  8-Pin Plastic DIP (derate 9.09mW/°C above +70°C)...727mW
  8-Pin SO (derate 5.88mW/°C above +70°C).....471mW
  8-Pin µMAX (derate 4.10mW/°C above +70°C).....330mW
  8-Pin CERDIP (derate 8.00mW/°C above +70°C).....640mW
Operating Temperature Ranges
  MAX95_E_A .....-40°C to +85°C
  MAX95_MJA.....-55°C to +125°C
Maximum Junction Temperatures
  MAX95_E_A.....+150°C
  MAX95_MJA.....+175°C
Storage Temperature Range .....-65°C to +165°C
Lead Temperature (soldering, 10s) .....+300°C

Stresses beyond those listed under "Absolute Maximum Ratings" may cause permanent damage to the device. These are stress ratings only, and functional operation of the device at these or any other conditions beyond those indicated in the operational sections of the specifications is not implied. Exposure to absolute maximum rating conditions for extended periods may affect device reliability.

Electrical Characteristics

(V_{DD} = 2.8V to 7V for MAX951/MAX952, V_{DD} = 2.4V to 7V for MAX953/MAX954, V_{SS} = 0, $V_{CM\ COMP}$ = 0 for the MAX953/MAX954, $V_{CM\ OPAMP}$ = 0, AMPOUT = (V_{DD} + V_{SS})/2, COMPOUT = low, T_A = T_{MIN} to T_{MAX}, typical values are at T_A = +25°C, unless otherwise noted.)

PARAMETER	SYMBOL	CONDITIONS		MIN	TYP	MAX	UNITS
Supply Voltage Range	V_{DD}	MAX951/MAX952	T_A = T_{MIN} to T_{MAX}	2.8		7.0	V
			T_A = -10°C to +85°C	2.7		7.0	
		MAX953/MAX954		2.4		7.0	
Supply Current (Note 1)	I_S	T_A = +25°C, MAX951/MAX952			7	10	µA
		MAX951E/MAX952E				11	
		MAX951M/MAX952M				13	
		T_A = +25°C, MAX953/MAX954			5	8	
		MAX953E/MAX954E				9	
		MAX953M/MAX954M				11	
COMPARATOR							
Input Offset Voltage (Note 2)	V_{OS}	T_A = +25°C			1	3	mV
		MAX95_EPA/ESA				14	
		MAX95_EUA (µMAX)				14	
		MAX95_MJA				6	
Trip Point (Note 3)		T_A = +25°C			4		mV
		MAX95_EUA (µMAX)			17		
		MAX95_EPA/ESA			5		
		MAX95_MJA			7		
Input Leakage Current (Note 4)		T_A = +25°C			0.003	0.050	nA
		MAX95_E			0.003	5	
		MAX95_M				40	

Electrical Characteristics (continued)

(V_{DD} = 2.8V to 7V for MAX951/MAX952, V_{DD} = 2.4V to 7V for MAX953/MAX954, V_{SS} = 0, $V_{CM\ COMP}$ = 0 for the MAX953/MAX954, $V_{CM\ OPAMP}$ = 0, AMPOUT = (V_{DD} + V_{SS})/2, COMPOUT = low, T_A = T_{MIN} to T_{MAX}, typical values are at T_A = +25°C, unless otherwise noted.)

PARAMETER	SYMBOL	CONDITIONS		MIN	TYP	MAX	UNITS
Common-Mode Input Range	CMVR			V_{SS}		V_{DD} -1.6V	V
Common-Mode Rejection Ratio	CMRR	V_{SS} to (V_{DD} - 1.6V), MAX953/MAX954			0.1	1	mV/V
Power-Supply Rejection Ratio	PSRR	MAX951/MAX952, V_{DD} = 2.8V to 7V			0.05	1	mV/V
		MAX953/MAX954, V_{DD} = 2.4V to 7V			0.05	1	
Response Time	t_{pd}	C_L = 100pF, T_A = +25°C, V_{DD} - V_{SS} = 5V	V_{OD} = 10mV		22		μs
			V_{OD} = 100mV		4		
Output High Voltage	V_{OH}	I_{SOURCE} = 2mA		V_{DD} - 0.4V			V
Output Low Voltage	V_{OL}	I_{SINK} = 1.8mA				V_{SS} + 0.4V	V
REFERENCE							
Reference Voltage (Note 5)	V_{REF}	MAX95_EPA/ESA		1.176	1.200	1.224	V
		MAX95_EUA (μMAX)		1.130	1.200	1.270	
		MAX95_MJA		1.164	1.200	1.236	
Load Regulation		I_{OUT} = ±20μA, T_A = +25°C			0.1		%
		I_{OUT} = ±6μA, MAX95_E				1.5	
		I_{OUT} = ±3μA, MAX95_M				1.5	
Voltage Noise	e_n	0.1Hz to 10Hz			16		$μV_{P-P}$
OP AMP							
Input Offset Voltage	V_{OS}	T_A = +25°C			1	3	mV
		MAX95_EPA/ESA				4	
		MAX95_EUA (μMAX)				5	
		MAX95_MJA				5	
Input Bias Current	I_B	T_A = +25°C			0.003	0.050	nA
		MAX95_E			0.003	5	
		MAX95_M			0.003	40	
Large-Signal Gain (No Load)	A_{VOL}	AMPOUT = 0.5V to 4.5V, V_{DD} - V_{SS} = 5V	T_A = +25°C	100	1000		V/mV
			MAX95_E	50			
			MAX95_M	10			
Large-Signal Gain (100kΩ Load to V_{SS})	A_{VOL}	AMPOUT = 0.5V to 4.5V, V_{DD} - V_{SS} = 5V	T_A = +25°C	40	150		V/mV
			MAX95_E	25			
			MAX95_M	5			
Gain Bandwidth	GBW	A_V = 1V/V, MAX951/MAX953, V_{DD} - V_{SS} = 5V			20		kHz
		A_V = 10V/V, MAX952/MAX954, V_{DD} - V_{SS} = 5V			125		

Electrical Characteristics (continued)

(V_{DD} = 2.8V to 7V for MAX951/MAX952, V_{DD} = 2.4V to 7V for MAX953/MAX954, V_{SS} = 0, $V_{CM\ COMP}$ = 0 for the MAX953/MAX954, $V_{CM\ OPAMP}$ = 0, AMPOUT = (V_{DD} + V_{SS})/2, COMPOUT = low, T_A = T_{MIN} to T_{MAX}, typical values are at T_A = +25°C, unless otherwise noted.)

PARAMETER	SYMBOL	CONDITIONS	MIN	TYP	MAX	UNITS
Slew Rate	SR	A_V = 1V/V, MAX951/MAX953, V_{DD} - V_{SS} = 5V		12.5		V/ms
		A_V = 10V/V, MAX952/MAX954, V_{DD} - V_{SS} = 5V		66		
Common-Mode Input Range	CMVR		V_{SS}		V_{DD} - 1.6	V
Common-Mode Rejection Ratio	CMRR	$V_{CM\ OPAMP}$ = V_{SS} to (V_{DD} - 1.6V)		0.03	1	mV/V
Power-Supply Rejection Ratio	PSRR	V_{DD} = 2.8V to 7V, MAX951/MAX952		0.07	1.0	mV/V
		V_{DD} = 2.4V to 7V, MAX953/MAX954		0.07	1.0	
Input Noise Voltage	e_n	f_o = 1kHz		80		nV√Hz
		f_o = 0.1Hz to 10Hz		1.2		μV_{P-P}
Output High Voltage	V_{OH}	R_L = 100kΩ to V_{SS}	V_{DD} - 500mV			V
Output Low Voltage	V_{OL}	R_L = 100kΩ to V_{SS}			V_{SS} + 50mV	V
Output Source Current	I_{SRC}	T_A = +25°C	70			µA
		T_A = +25°C, V_{DD} - V_{SS} = 5V	300	820		
		MAX95_E	60			
		MAX95_M	40			
Output Sink Current	I_{SNK}	T_A = +25°C	70			µA
		T_A = +25°C, V_{DD} - V_{SS} = 5V	200	570		
		MAX95_E	50			
		MAX95_M	30			

Note 1: Supply current is tested with COMPIN+ = (REF - 100mV) for MAX951/MAX952, and COMPIN+ = 0 for MAX953/MAX954.

Note 2: Input Offset Voltage is defined as the center of the input-referred hysteresis. $V_{CM\ COMP}$ = REF for MAX951/MAX952, and $V_{CM\ COMP}$ = 0 for MAX953/MAX954.

Note 3: Trip Point is defined as the differential input voltage required to make the comparator output change. The difference between upper and lower trip points is equal to the width of the input-referred hysteresis. $V_{CM\ COMP}$ = REF for MAX951/MAX952, and $V_{CM\ COMP}$ = 0 for MAX953/MAX954.

Note 4: For MAX951/MAX952, input leakage current is measured for COMPIN- at the reference voltage. For MAX953/MAX954, input leakage current is measured for both COMPIN+ and COMPIN- at V_{SS}.

Note 5: Reference voltage is measured with respect to V_{SS}. Contact factory for availability of a 3% accurate reference voltage in the µMAX package.

Typical Operating Characteristics

(T_A = +25°C, unless otherwise noted.)

SUPPLY CURRENT vs. SUPPLY VOLTAGE

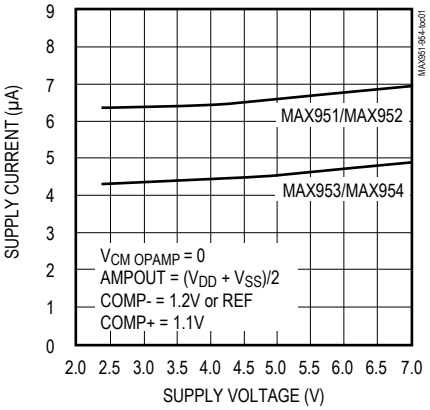

SUPPLY CURRENT vs. TEMPERATURE

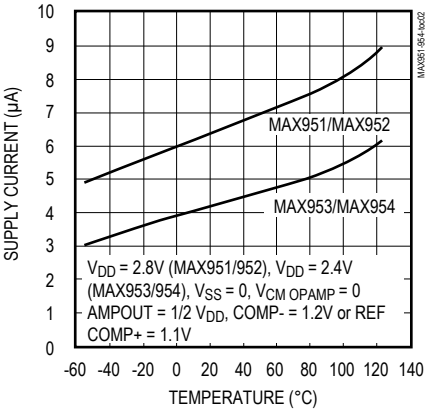

REFERENCE VOLTAGE vs. TEMPERATURE

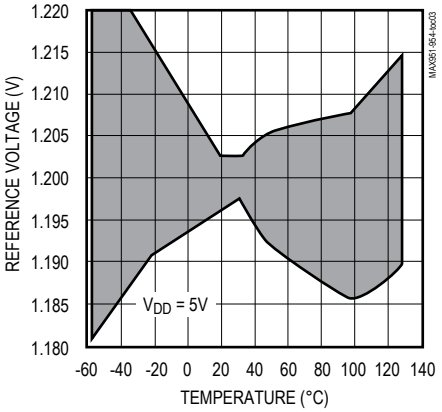

REFERENCE OUTPUT VOLTAGE vs. LOAD CURRENT

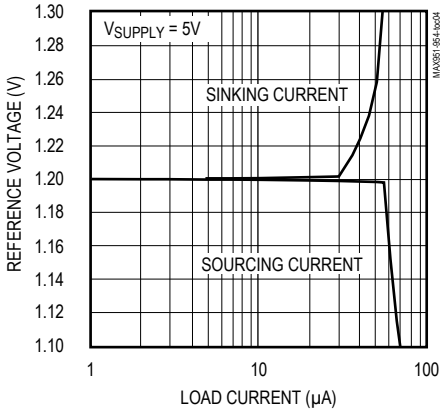

POWER-SUPPLY REJECTION RATIO vs. FREQUENCY

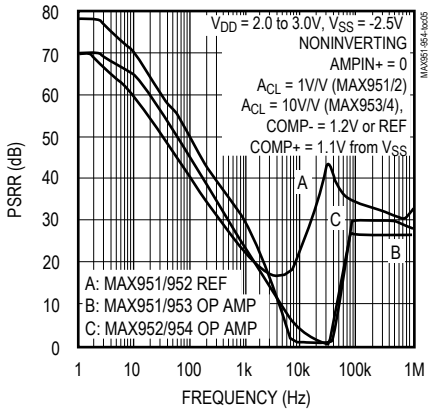

DC OPEN-LOOP GAIN vs. SUPPLY VOLTAGE

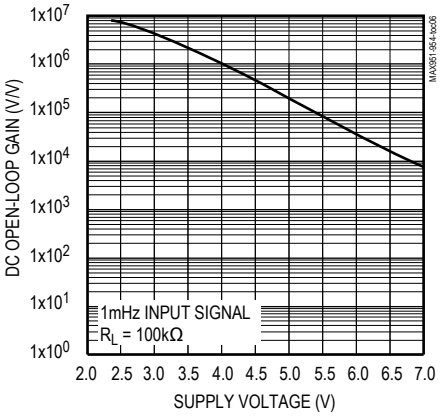

DC OPEN-LOOP GAIN vs. TEMPERATURE

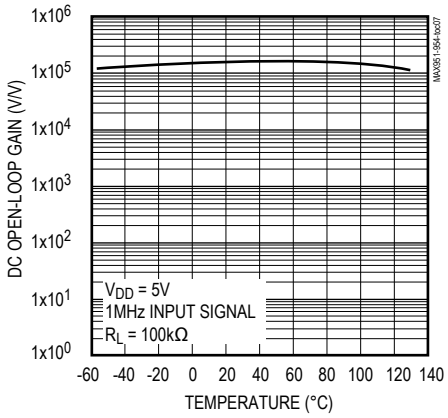

MAX951/MAX953 OPEN-LOOP GAIN AND PHASE vs. FREQUENCY

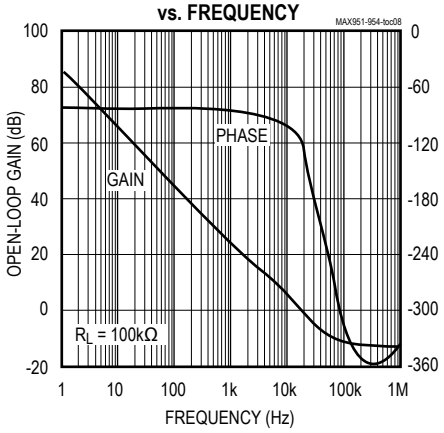

MAX952/MAX954 OPEN-LOOP GAIN AND PHASE vs. FREQUENCY

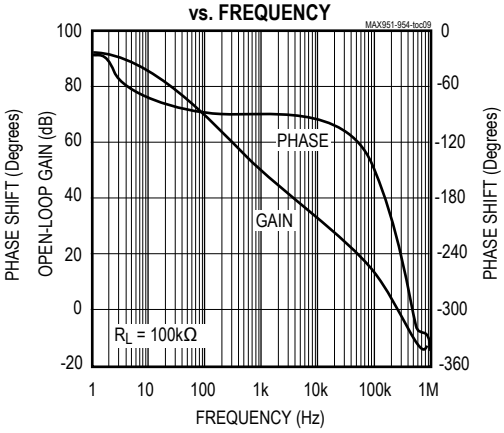

Typical Operating Characteristics (continued)

(T_A = +25°C, unless otherwise noted.)

OP AMP OUTPUT VOLTAGE vs. LOAD CURRENT

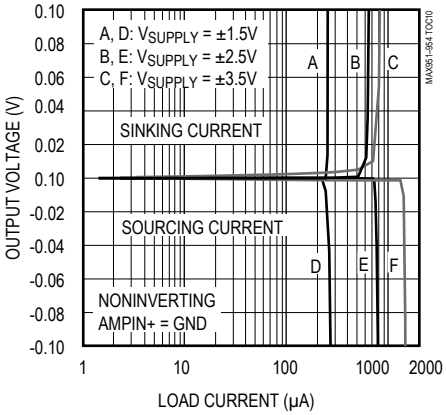

OP AMP SHORT-CIRCUIT CURRENT vs. SUPPLY VOLTAGE

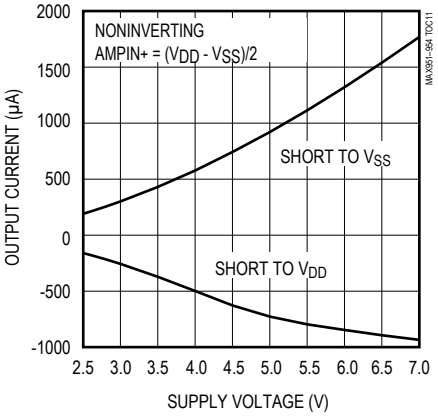

OP AMP PERCENT OVERSHOOT vs. CAPACITIVE LOAD

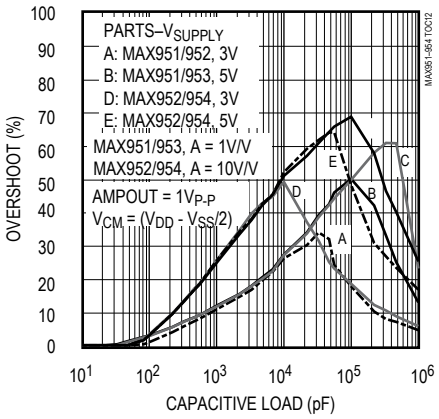

COMPARATOR OUTPUT VOLTAGE vs. LOAD CURRENT

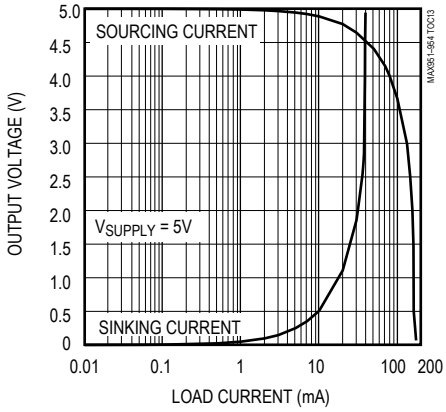

COMPARATOR SHORT-CIRCUIT CURRENT vs. SUPPLY VOLTAGE

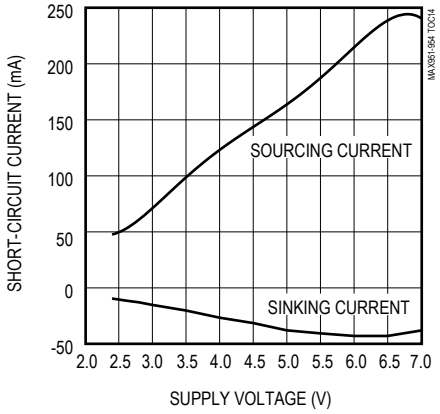

Typical Operating Characteristics (continued)

(T_A = +25°C, unless otherwise noted.)

COMPARATOR RESPONSE TIME FOR VARIOUS INPUT OVERDRIVES (FALLING)

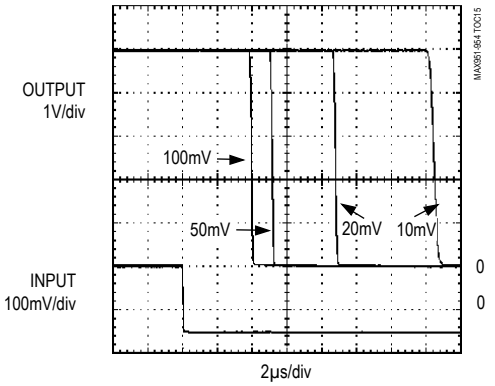

MAX953: LOAD = 100kΩ || 100pF, V_{SUPPLY} = 5V

COMPARATOR RESPONSE TIME FOR VARIOUS INPUT OVERDRIVES (RISING)

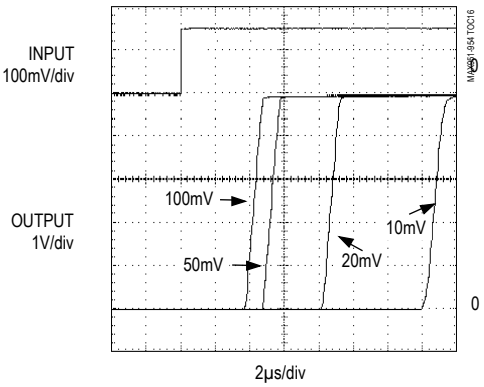

MAX953: LOAD = 100kΩ || 100pF, V_{SUPPLY} = 5V

MAX951/MAX953 OP AMP SMALL-SIGNAL TRANSIENT RESPONSE

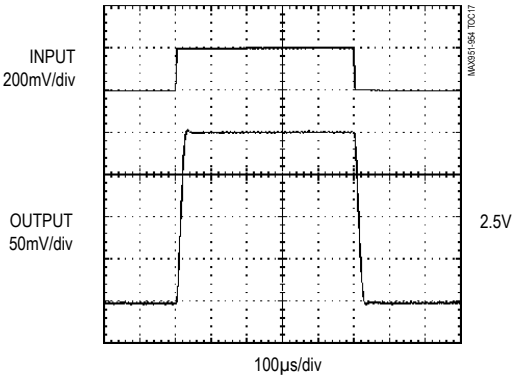

NONINVERTING: A_{VCL} = 1V/V,
LOAD = 100kΩ || 100pF to V_{SS}, V_{SUPPLY} = 5V

MAX951/MAX953 OP AMP LARGE-SIGNAL TRANSIENT RESPONSE

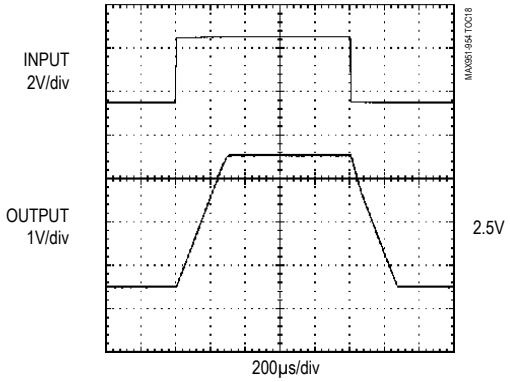

NONINVERTING, A_{VCL} = 1V/V,
LOAD = 100kΩ || 100pF to V_{SS}, V_{SUPPLY} = 5V

MAX952/MAX954 OP AMP SMALL-SIGNAL TRANSIENT RESPONSE

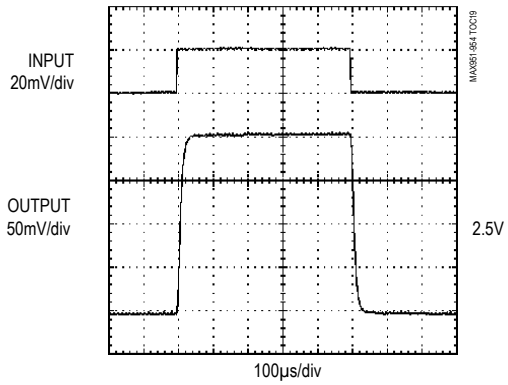

NONINVERTING, A_{VCL} = 10V/V,
LOAD = 100kΩ || 100pF to V_{SS}, V_{SUPPLY} = 5V

MAX952/MAX954 OP AMP LARGE-SIGNAL TRANSIENT RESPONSE

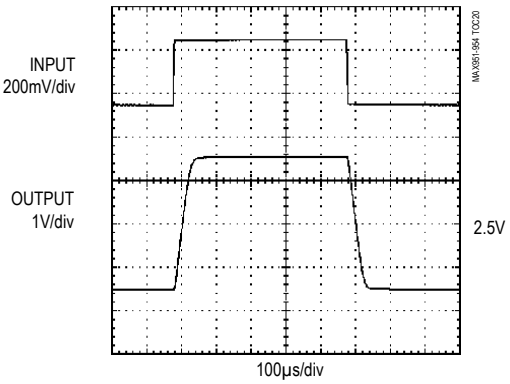

NONINVERTING, A_{VCL} = 10V/V,
LOAD = 100kΩ || 100pF to V_{SS}, V_{SUPPLY} = 5V

Pin Description

PIN		NAME	FUNCTION
MAX951 MAX952	MAX953 MAX954		
1	1	AMPOUT	Op Amp Output
2	2	AMPIN-	Inverting Op Amp Input
3	3	AMPIN+	Noninverting Op Amp Input
4	4	V_{SS}	Negative Supply or Ground
5	5	COMPIN+	Noninverting Comparator Input
6	—	REF	1.200V Reference Output. Also connected to inverting comparator input.
—	6	COMPIN-	Inverting Comparator Input
7	7	COMPOUT	Comparator Output
8	8	V_{DD}	Positive Supply

Functional Diagrams

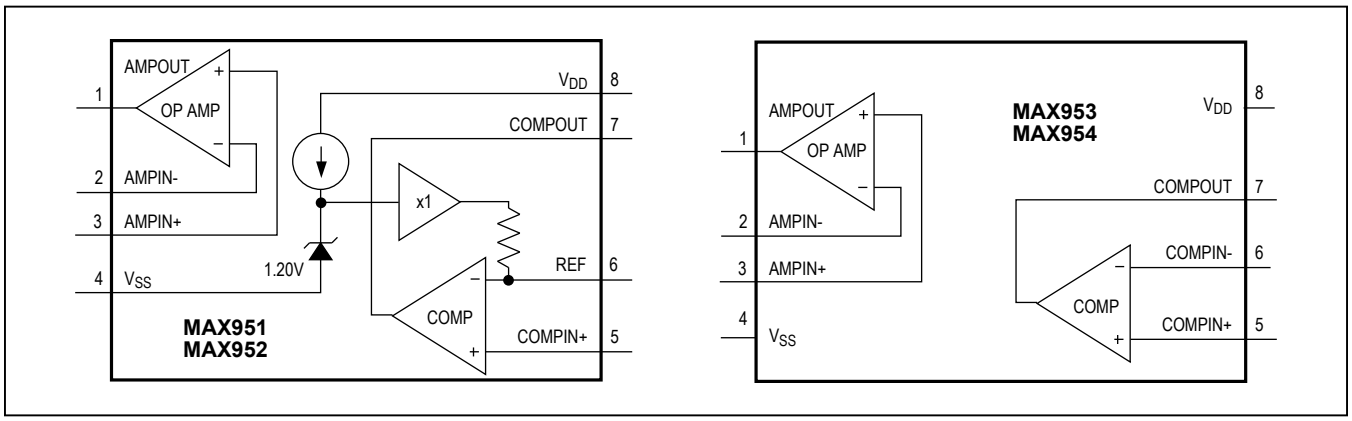

Figure 1. MAX951–MAX954 Functional Diagrams

Detailed Description

The MAX951–MAX954 are combinations of a micropower op amp, comparator, and reference in an 8-pin package, as shown in Figure 1. In the MAX951/MAX952, the comparator's negative input is connected to a 1.20V ±2% bandgap reference. All four devices are optimized to operate from a single supply. Supply current is less than 10µA (7µA typical) for the MAX951/MAX952 and less than 8µA (5µA typical) for the MAX953/MAX954.

Op Amp

The op amps in the MAX951/MAX953 are internally compensated to be unity-gain stable, while the op amps in the MAX952/MAX954 feature 125kHz typical gain bandwidth, 66V/ms slew rate, and stability for gains of 10V/V or greater. All these op amps feature high-impedance differential inputs and a common-mode input voltage range that extends from the negative supply rail to within 1.6V of the positive rail. They have a CMOS output stage that swings rail to rail and is driven by a proprietary high gain stage, which enables them to operate with an ultra-low supply current while maintaining linearity under loaded conditions. Careful design results in good DC characteristics over their entire operating temperature range, minimizing input referred errors.

Comparator

The comparator in the MAX951–MAX954 has a high-impedance differential input stage with a common-mode input voltage range that extends from the negative supply rail to within 1.6V of the positive rail. Their CMOS output stage swings rail-to-rail and can continuously source as much as 40mA. The comparators eliminate power-supply

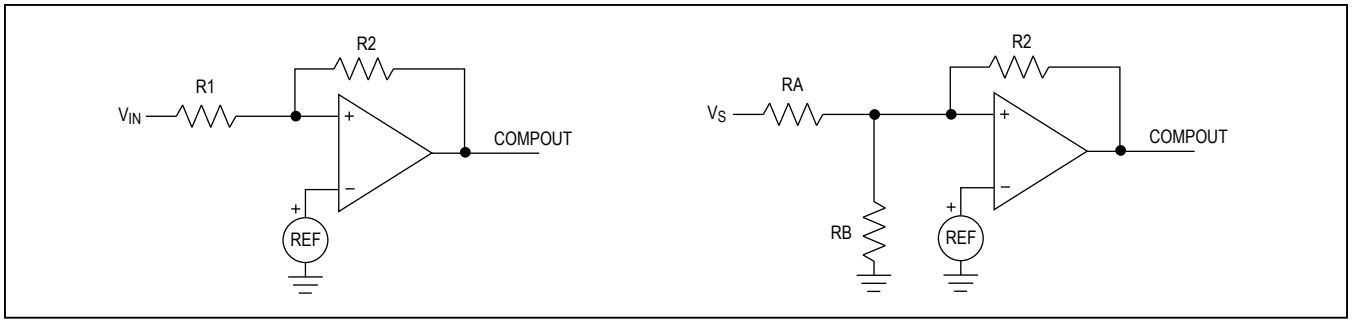

Figure 2. External Hysteresis

glitches that commonly occur when changing logic states, minimizing parasitic feedback and making them easier to use. In addition, they include internal hysteresis (±3mV) to ensure clean output switching, even with slow-moving input signals. The inputs can be taken above and below the supply rails up to 300mV without damage. Input voltages beyond this range can forward bias the ESD-protection diodes and should be avoided.

The MAX951–MAX954 comparator outputs swing rail-to-rail (from V_{DD} to V_{SS}). TTL compatibility is assured by using a 5V ±10% supply.

The MAX951–MAX954 comparators continuously output source currents as high as 40mA and sink currents of over 5mA, while keeping quiescent currents in the micro-ampere range. The output can source 100mA (at V_{DD} = 5V) for short pulses, as long as the package's maximum power dissipation is not exceeded. The output stage does not generate crowbar switching currents during transitions; this minimizes feedback through the supplies and helps ensure stability without bypassing.

Reference

The internal reference in the MAX951/MAX952 has an output of 1.20V with respect to V_{SS}. Its accuracy is ±2% in the -40°C to +85°C temperature range. It is comprised of a trimmed bandgap reference fed by a proportional-to-absolute-temperature (PTAT) current source and buffered by a micropower unity-gain amplifier. The REF output is typically capable of sourcing and sinking 20µA. Do not bypass the reference output. The reference is stable for capacitive loads less than 100pF.

Applications Information

The micropower MAX951–MAX954 are designed to extend battery life in portable instruments and add functionality in power-limited industrial controls. Following are some practical considerations for circuit design and layout.

Comparator Hysteresis

Hysteresis increases the comparator's noise immunity by increasing the upper threshold and decreasing the lower threshold. The comparator in these devices contain a ±3mV wide internal hysteresis band to ensure clean output switching, even with slow-moving signals.

When necessary, hysteresis can be increased by using external resistors to add positive feedback, as shown in Figure 2. This circuit increases hysteresis at the expense of more supply current and a slower response. The design procedure is as follows:

1) Set R2. The leakage current in COMPIN+ is less than 5nA (up to +85°C), so current through R2 can be as little as 500nA and still maintain good accuracy. If R2 = 2.4MΩ, the current through R2 at the upper trip point is V_{REF}/R2 or 500nA.
2) Choose the width of the hysteresis band. In this example choose V_{EHYST} = 50mV

$$R1 = R2\frac{\left[V_{EHYST} - 2V_{IHYST}\right]}{\left(V_{DD} + 2V_{IHYST}\right)}$$

   where the internal hysteresis is V_{IHYST} = 3mV.
3) Determine R1. If the supply voltage is 5V, then R1 = 24kΩ.
4) Check the hysteresis trip points. The upper trip point is

$$V_{IN(H)} = \frac{(R1 + R2)}{R2}\left(V_{REF} + V_{IHYST}\right)$$

   or 1.22V in our example. The lower trip point is 50mV less, or 1.17V in our example.

   If a resistor divider is used for R1, the calculations should be modified using a Thevenin equivalent model.
5) Determine R_A:

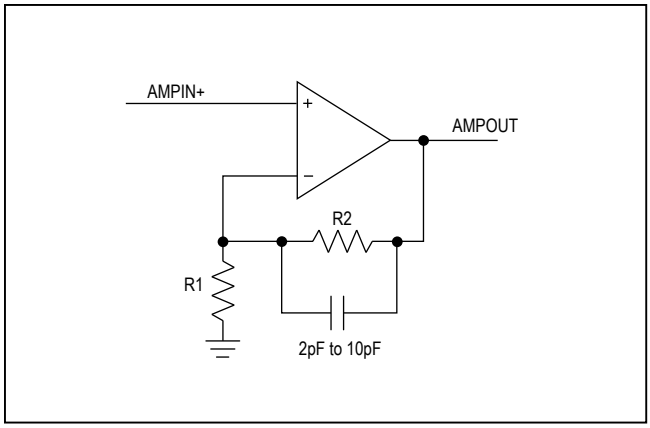

Figure 3. Compensation for Feedback-Node Capacitance

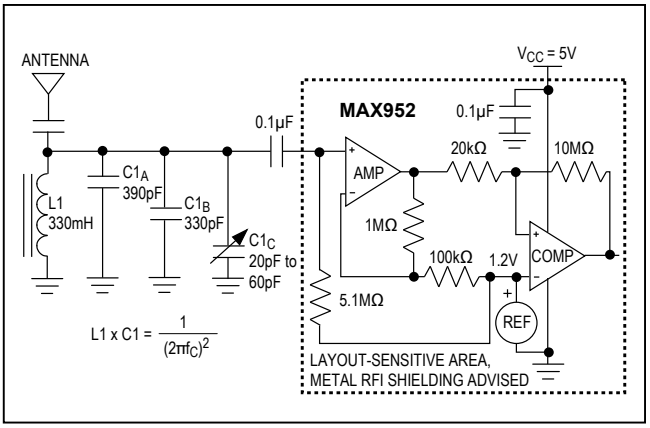

Figure 4. Low-Frequency Radio Receiver Application

$$R_A \approx R2\frac{V_{SHYST}}{V_{DD}}, \text{for } V_{SHYST} >> V_{IHYST}$$

In the example, R_A is again 24kΩ.

6) Select the upper trip point $V_{S(H)}$. Our example is set at 4.75V.

7) Calculate R_B.

$$R_B = \frac{(V_{REF} + V_{IHYST})(R2)(R_A)}{(R2)(V_{S(H)}) - (V_{REF} + V_{IHSYT})(R_A + R2)}$$

where R_B is 8.19kΩ, or approximately 8.2kΩ.

Input Noise Considerations

Because low power requirements often demand high-impedance circuits, effects from radiated noise are more significant. Thus, traces between the op amp or comparator inputs and any resistor networks attached should be kept as short as possible.

Crosstalk

Reference

Internal crosstalk to the reference from the comparator is package dependent. Typical values (V_{DD} = 5V) are 45mV for the plastic DIP package and 32mV for the SO package. Applications using the reference for the op amp or external circuitry can eliminate this crosstalk by using a simple RC lowpass filter, as shown in Figure 5.

Op Amp

Internal crosstalk to the op amp from the comparator is package dependent, but not input-referred. Typical values (V_{DD} = 5V) are 4mV for the plastic DIP package and 280µV for the SO package.

Op Amp Stability and Board Layout Considerations

Unlike other industry-standard micropower CMOS op amps, the op amps in the MAX951–MAX954 maintain stability in their minimum gain configuration while driving heavy capacitive loads, as demonstrated in the MAX951/MAX953 Op Amp Percent Overshoot vs. Capacitive Load graph in the *Typical Operating Characteristics*.

Although this family is primarily designed for low-frequency applications, good layout is extremely important. Low-power, high-impedance circuits may increase the effects of board leakage and stray capacitance. For example, the combination of a 10MΩ resistance (from leakage between traces on a contaminated, poorly designed PC board) and a 1pF stray capacitance provides a pole at approximately 16kHz, which is near the amplifier's bandwidth. Board routing and layout should minimize leakage and stray capacitance. In some cases, stray capacitance may be unavoidable and it may be necessary to add a 2pF to 10pF capacitor across the feedback resistor to compensate; select the smallest capacitor value that ensures stability.

Input Overdrive

With 100mV overdrive, comparator propagation delay is typically 6µs. The *Typical Operating Characteristics* show propagation delay for various overdrive levels.

Supply current can increase when the op amp in the MAX951–MAX954 is overdriven to the negative supply rail. For example, when connecting the op amp as a comparator and applying a -100mV input overdrive, supply current rises by around 15µA and 32µA for supply voltages of 2.8V and 7V, respectively.

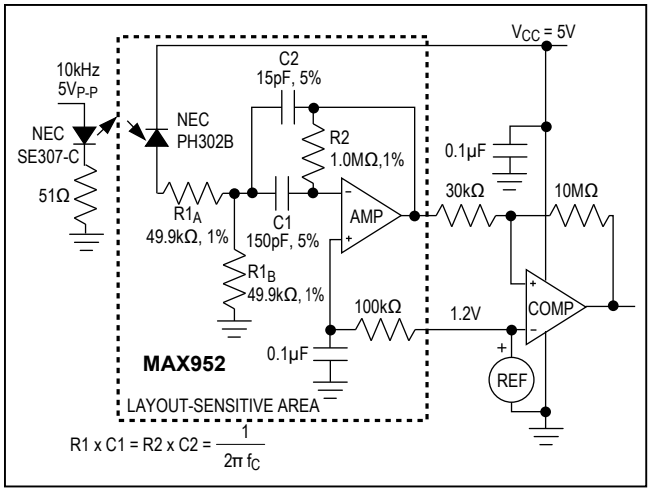

Figure 5. Infrared Receiver Application

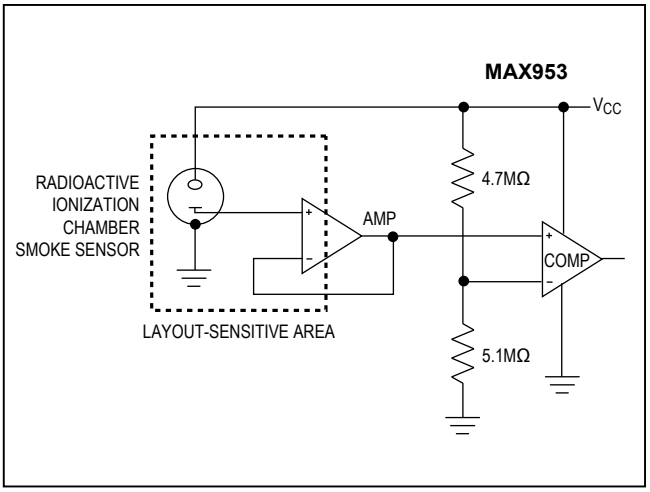

Figure 6. Sensor Preamp and Alarm Trigger Application

Power-Supply Bypassing

Power-supply bypass capacitors are not required if the supply impedance is low. For single-supply applications, it is good general practice to bypass V_{DD} with a 0.1µF capacitor to ground. Do not bypass the reference output.

Applications Circuits

Low-Frequency Radio Receiver for Alarms and Detectors

The circuit in Figure 4 is useful as a front end for low-frequency RF alarms. The unshielded inductor (M7334-ND from Digikey) is used with capacitors $C1_A$, $C1_B$, and $C1_C$ in a resonant circuit to provide frequency selectivity. The op amp from a MAX952 amplifies the signal received. The comparator improves noise immunity, provides a signal strength threshold, and translates the received signal into a pulse train. Carrier frequencies are limited to around 10kHz. 10kHz is used in the example in Figure 4.

The layout and routing of components for the amplifier should be tight to minimize 60Hz interference and crosstalk from the comparator. Metal shielding is recommended to prevent RFI from the comparator or digital circuitry from exciting the receiving antenna. The transmitting antenna can be long parallel wires spaced about 7.2cm apart, with equal but opposite currents. Radio waves from this antenna will be detectable when the receiver is brought within close proximity, but cancel out at greater distances.

Infrared Receiver Front End for Remote Controls and Data Links

The circuit in Figure 5 uses the MAX952 as a pin photodiode preamplifier and discriminator for an infrared receiver. The op amp is configured as a Delyiannis-Friend bandpass filter to reduce disturbances from noise and eliminate low-frequency interference from sunlight, fluorescent lights, etc. This circuit is applicable for TV remote controls and low-frequency data links up to 20kbps. Carrier frequencies are limited to around 10kHz. 10kHz is used in the example circuit.

Component layout and routing for the amplifier should be tight to reduce stray capacitance, 60Hz interference, and RFI from the comparator. Crosstalk from comparator edges will distort the amplifier signal. In order to minimize the effect, a lowpass RC filter is added to the connection from the reference to the noninverting input of the op amp.

Sensor Preamp and Alarm Trigger for Smoke Detectors

The high-impedance CMOS inputs of the MAX951–MAX954 op amps are ideal for buffering high-impedance sensors, such as smoke detector ionization chambers, piezoelectric transducers, gas detectors, and pH sensors. Input bias currents are typically less than 3pA at room temperature. A 5µA typical quiescent current for the MAX953 will minimize battery drain without resorting to complex sleep schemes, allowing continuous monitoring and immediate detection.

Ionization-type smoke detectors use a radioactive source, such as Americium, to ionize smoke particles. A positive voltage on a plate attached to the source repels the positive smoke ions and accelerates them toward an outer electrode connected to ground. Some ions collect on an intermediate plate. With careful design, the voltage on this plate will stabilize at a little less than one-half the supply voltage under normal conditions, but rise higher when smoke increases the ion current. This voltage is buffered

by the high-input-impedance op amp of a MAX951 (Figure 6). The comparator and resistor voltage divider set an alarm threshold to indicate a fire.

Design and fabrication of the connection from the intermediate plate of the ionization chamber to the noninverting input of the op amp is critical, since the impedance of this node must be well above 50MΩ. This connection must be as short and direct as possible to prevent charge leakage and 60Hz interference. Where possible, the grounded outer electrode or chassis of the ionization chamber should shield this connection to reduce 60Hz interference. Pay special attention to board cleaning, to prevent leakage due to ionic compounds such as chlorides, flux, and other contaminants from the manufacturing process. Where applicable, a coating of high-purity wax may be used to insulate this connection and prevent leakage due to surface moisture or an accumulation of dirt.

Ordering Information

PART	TEMP RANGE	PIN-PACKAGE
MAX951C/D	0°C to +70°C	Dice*
MAX951EPA	-40°C to +85°C	8 Plastic Dip
MAX951ESA	-40°C to +85°C	8 SO
MAX951EUA	-40°C to +85°C	8 µMAX
MAX951MJA	-55°C to +125°C	8 CERDIP**
MAX952C/D	0°C to +70°C	Dice*
MAX952EPA	-40°C to +85°C	8 Plastic Dip
MAX952ESA	-40°C to +85°C	8 SO
MAX952EUA	-40°C to +85°C	8 µMAX
MAX952MJA	-55°C to +125°C	8 CERDIP**
MAX953C/D	0°C to +70°C	Dice*
MAX953EPA	-40°C to +85°C	8 Plastic Dip
MAX953ESA	-40°C to +85°C	8 SO
MAX953EUA	-40°C to +85°C	8 µMAX
MAX953MJA	-55°C to +125°C	8 CERDIP**
MAX954C/D	0°C to +70°C	Dice*
MAX954EPA	-40°C to +85°C	8 Plastic Dip
MAX954ESA	-40°C to +85°C	8 SO
MAX954EUA	-40°C to +85°C	8 µMAX
MAX954MJA	-55°C to +125°C	8 CERDIP**

**Dice are tested at T_A = +25°C, DC parameters only.*

***Contact factory for availability and processing to MIL-STD-883.*

Chip Topography

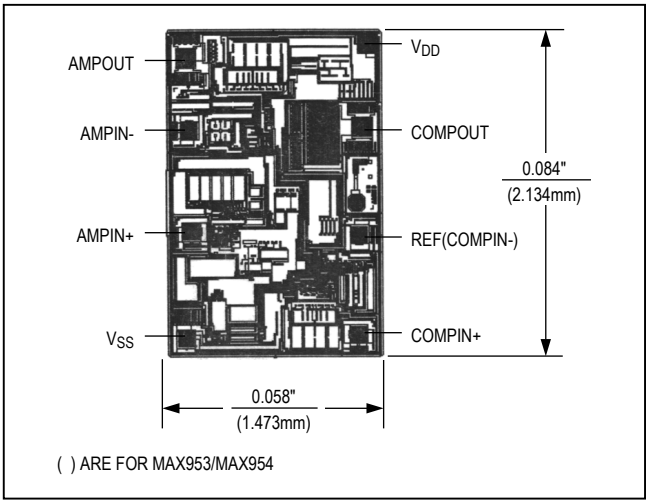

Chip Information

TRANSISTOR COUNT: 163

SUBSTRATE CONNECTED TO V_{DD}

Typical Operating Circuit

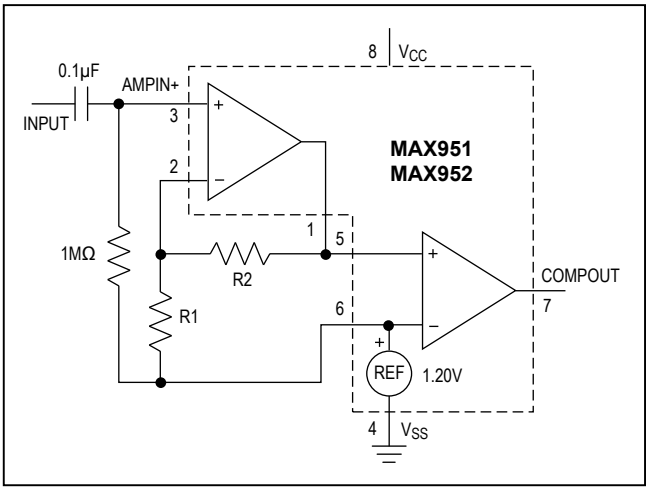

Package Information

For the latest package outline information and land patterns (footprints), go to **www.maximintegrated.com/packages**. Note that a "+", "#", or "-" in the package code indicates RoHS status only. Package drawings may show a different suffix character, but the drawing pertains to the package regardless of RoHS status.

Revision History

REVISION NUMBER	REVISION DATE	DESCRIPTION	PAGES CHANGED
3	2/15	Removed automotive reference in the *Applications* section	1

For pricing, delivery, and ordering information, please contact Maxim Direct at 1-888-629-4642, or visit Maxim Integrated's website at www.maximintegrated.com.

Maxim Integrated cannot assume responsibility for use of any circuitry other than circuitry entirely embodied in a Maxim Integrated product. No circuit patent licenses are implied. Maxim Integrated reserves the right to change the circuitry and specifications without notice at any time. The parametric values (min and max limits) shown in the Electrical Characteristics table are guaranteed. Other parametric values quoted in this data sheet are provided for guidance.

Maxim Integrated and the Maxim Integrated logo are trademarks of Maxim Integrated Products, Inc. © 2015 Maxim Integrated Products, Inc.

OCEAN CHIPS
Океан Электроники
Поставка электронных компонентов

Компания «Океан Электроники» предлагает заключение долгосрочных отношений при поставках импортных электронных компонентов на взаимовыгодных условиях!

Наши преимущества:

- Поставка оригинальных импортных электронных компонентов напрямую с производств Америки, Европы и Азии, а так же с крупнейших складов мира;
- Широкая линейка поставок активных и пассивных импортных электронных компонентов (более 30 млн. наименований);
- Поставка сложных, дефицитных, либо снятых с производства позиций;
- Оперативные сроки поставки под заказ (от 5 рабочих дней);
- Экспресс доставка в любую точку России;
- Помощь Конструкторского Отдела и консультации квалифицированных инженеров;
- Техническая поддержка проекта, помощь в подборе аналогов, поставка прототипов;
- Поставка электронных компонентов под контролем ВП;
- Система менеджмента качества сертифицирована по Международному стандарту ISO 9001;
- При необходимости вся продукция военного и аэрокосмического назначения проходит испытания и сертификацию в лаборатории (по согласованию с заказчиком);
- Поставка специализированных компонентов военного и аэрокосмического уровня качества (Xilinx, Altera, Analog Devices, Intersil, Interpoint, Microsemi, Actel, Aeroflex, Peregrine, VPT, Syfer, Eurofarad, Texas Instruments, MS Kennedy, Miteq, Cobham, E2V, MA-COM, Hittite, Mini-Circuits, General Dynamics и др.);

Компания «Океан Электроники» является официальным дистрибьютором и эксклюзивным представителем в России одного из крупнейших производителей разъемов военного и аэрокосмического назначения **«JONHON»**, а так же официальным дистрибьютором и эксклюзивным представителем в России производителя высокотехнологичных и надежных решений для передачи СВЧ сигналов **«FORSTAR»**.

AVIC JONHON

«JONHON» (основан в 1970 г.)

Разъемы специального, военного и аэрокосмического назначения:

(Применяются в военной, авиационной, аэрокосмической, морской, железнодорожной, горно- и нефтедобывающей отраслях промышленности)

«FORSTAR» (основан в 1998 г.)

ВЧ соединители, коаксиальные кабели, кабельные сборки и микроволновые компоненты:

(Применяются в телекоммуникациях гражданского и специального назначения, в средствах связи, РЛС, а так же военной, авиационной и аэрокосмической отраслях промышленности).

FORSTAR®

Телефон: 8 (812) 309-75-97 (многоканальный)
Факс: 8 (812) 320-03-32
Электронная почта: ocean@oceanchips.ru
Web: http://oceanchips.ru/
Адрес: 198099, г. Санкт-Петербург, ул. Калинина, д. 2, корп. 4, лит. А