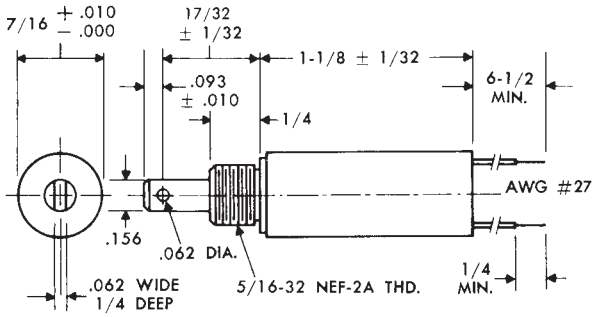

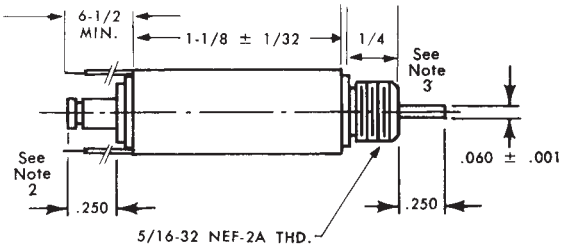

Notes:
1. Solenoid shown in energized position.
2. .250 Plunger configuration shown supplied for spring return only.
3. Largest size thread that may be threaded on push rod #0.
4. Push force approximately 90% of pull forces shown.

Type C7-18

Specifications	
Size	7/16″ Diameter x 1⅛″ Long (From Mounting Surface)
Weight	½ Oz. Max.
Mounting	5/16-32 Threaded Bushing (Nut and Lockwasher Supplied)
Dielectric Strength	500 VRMS
Insulation Material	Class "A" (105° C)
Life Expectancy	10 Million Cycles at Rated Load
Nominal Coil Power	Continuous Duty—2 Watts Intermittent Duty (10%)—10 Watts (One Minute Max. on Time)

Standard Coils		
Nominal Volts (D.C.)	**Resistance (OHMS ± 10%) at 25°C**	
	Continuous Duty	**Intermittent Duty**
6	18	3.6
12	72	14.4
24	288	58.0
110	6613	1323.0
Other Coils and Duty Cycles Available Upon Request		

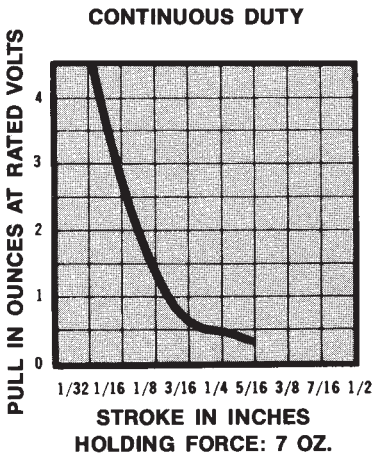

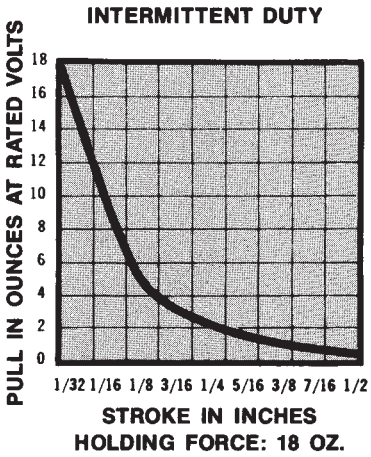

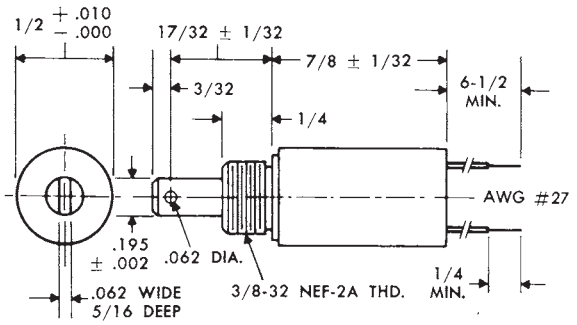

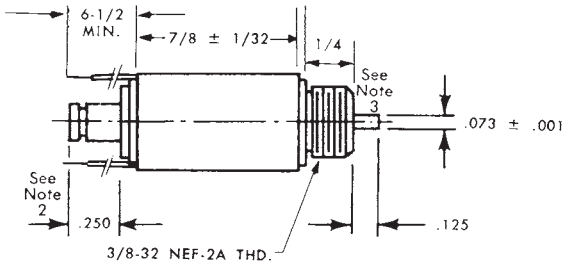

Notes:
1. Solenoid shown in energized position.
2. .250 Plunger configuration shown supplied for spring return only.
3. Largest size thread that may be threaded on push rod #1.
4. Push force approximately 90% of pull forces shown.

Type C8-14

Specifications	
Size	½" Diameter x ⅞" Long (From Mounting Surface)
Weight	1 Oz. Max.
Mounting	⅜-32 Threaded Bushing (Nut and Lockwasher Supplied)
Dielectric Strength	500 VRMS
Insulation Material	Class "A" (105° C)
Life Expectancy	10 Million Cycles at Rated Load
Nominal Coil Power	Continuous Duty—2.4 Watts Intermittent Duty (10%)—7 Watts (One Minute Max. on Time)

Standard Coils		
Nominal Volts (D.C.)	**Resistance (OHMS ± 10%) at 25°C**	
	Continuous Duty	**Intermittent Duty**
6	15	5.0
12	60	20.6
24	240	82.0
110	5510	1890.0
Other Coils and Duty Cycles Available Upon Request		

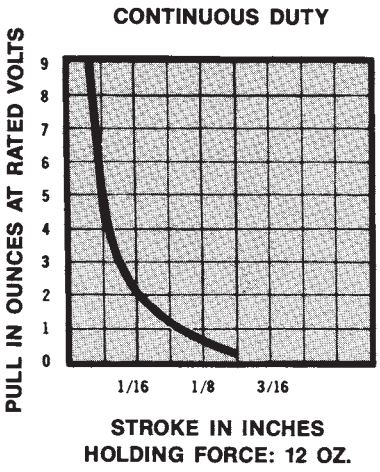

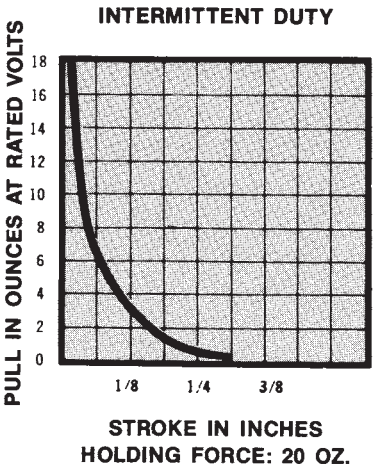

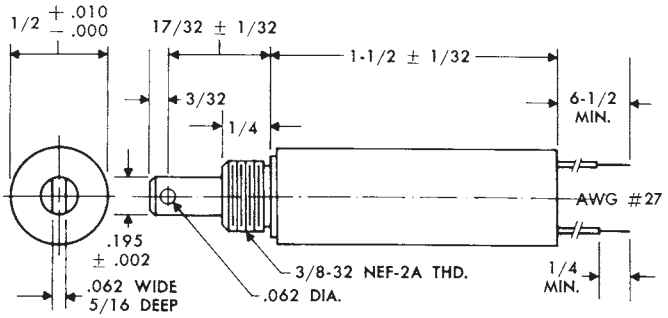

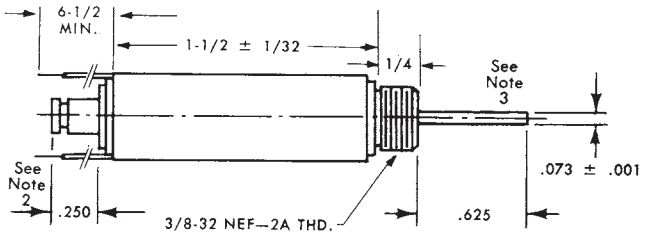

Notes:
1. Solenoid shown in energized position.
2. .250 Plunger configuration shown supplied for spring return only.
3. Largest size thread that may be threaded on push rod #1.
4. Push force approximately 90% of pull forces shown.

Type C8-24

Specifications	
Size	½" Diameter x 1½" Long (From Mounting Surface)
Weight	1½ Oz. Max.
Mounting	⅜-32 Threaded Bushing (Nut and Lockwasher Supplied)
Dielectric Strength	500 VRMS
Insulation Material	Class "A" (105° C)
Life Expectancy	10 Million Cycles at Rated Load
Nominal Coil Power	Continuous Duty—3.5 Watts Intermittent Duty (10%)—15 Watts (One Minute Max. on Time)

Standard Coils		
Nominal Volts (D.C.)	**Resistance (OHMS ± 10%) at 25°C**	
	Continuous Duty	**Intermittent Duty**
6	10.3	2.4
12	41.0	9.6
24	165.0	38.5
110	3780.0	882.0
Other Coils and Duty Cycles Available Upon Request		

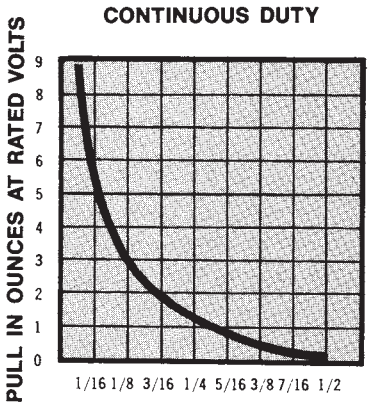

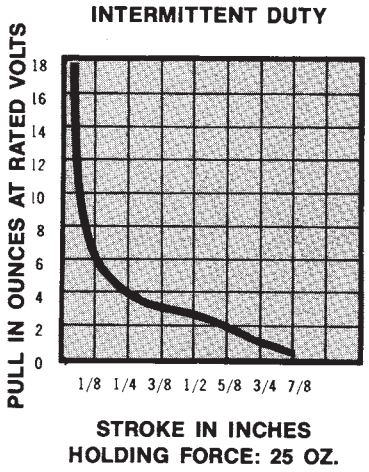

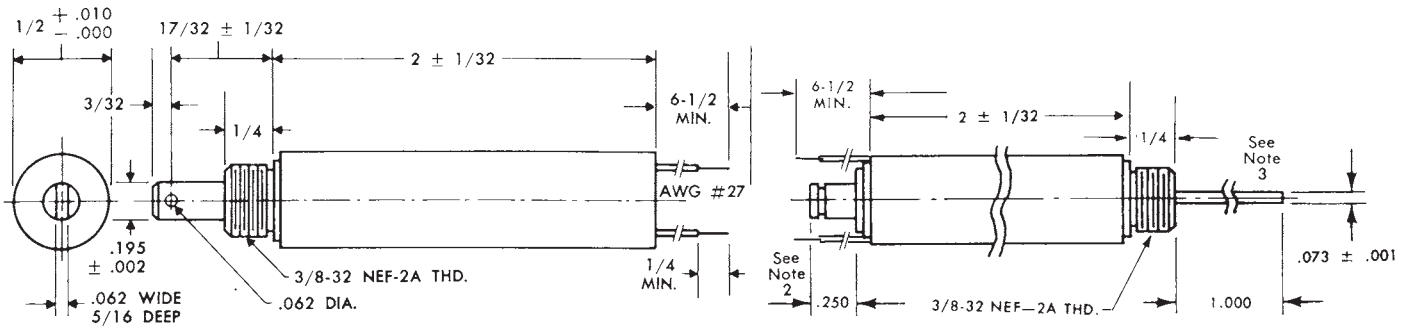

Notes:
1. Solenoid shown in energized position.
2. .250 Plunger configuration shown supplied for spring return only.
3. Largest size thread that may be threaded on push rod #1.
4. Push force approximately 90% of pull forces shown.

Type C8-32

Specifications	
Size	½" Diameter x 2" Long (From Mounting Surface)
Weight	2 Oz. Max.
Mounting	⅜-32 Threaded Bushing (Nut and Lockwasher Supplied)
Dielectric Strength	500 VRMS
Insulation Material	Class "A" (105° C)
Life Expectancy	10 Million Cycles at Rated Load
Nominal Coil Power	Continuous Duty—4 Watts Intermittent Duty (10%)—20 Watts (One Minute Max. on Time)

Standard Coils		
Nominal Volts (D.C.)	**Resistance (OHMS ± 10%) at 25°C**	
	Continuous Duty	**Intermittent Duty**
6	9	1.8
12	36	7.2
24	145	29.0
110	3306	661.0
Other Coils and Duty Cycles Available Upon Request		

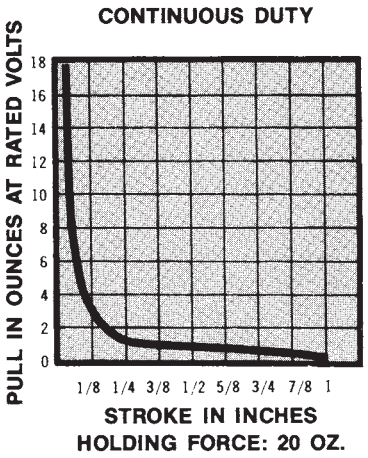

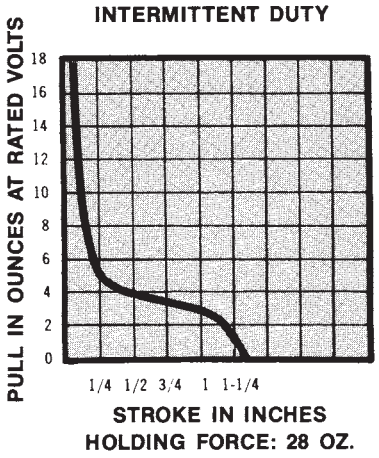

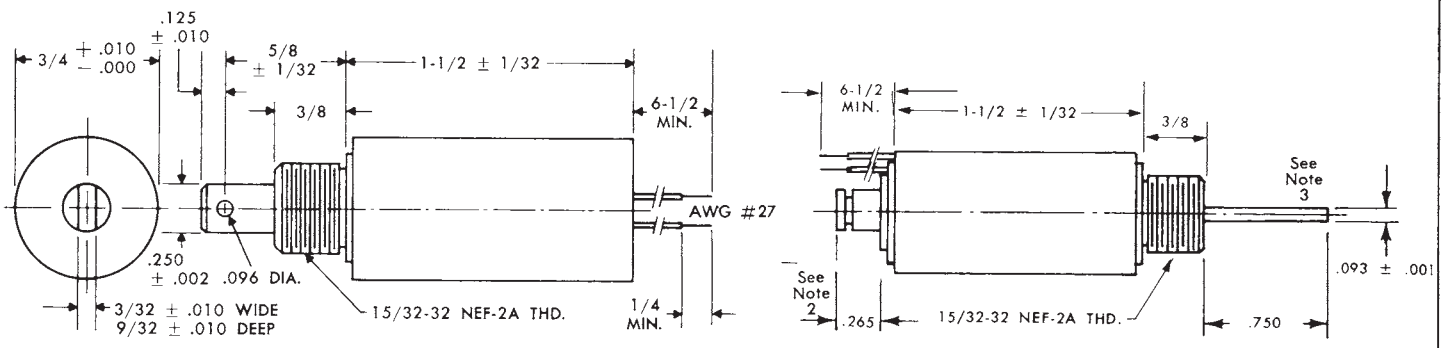

Notes:
1. Solenoid shown in energized position.
2. .265 Plunger configuration shown supplied for spring return only.
3. Largest size thread that may be threaded on push rod #3.
4. Push force approximately 90% of pull forces shown.

Type C12-24

Specifications	
Size	¾″ Diameter x 1½″ Long (From Mounting Surface)
Weight	3 Oz. Max.
Mounting	15/32-32 Threaded Bushing (Nut and Lockwasher Supplied)
Dielectric Strength	500 VRMS
Insulation Material	Class "A" (105° C)
Life Expectancy	10 Million Cycles at Rated Load
Nominal Coil Power	Continuous Duty—3.5 Watts Intermittent Duty (10%)—22 Watts (One Minute Max. on Time)

Standard Coils		
Nominal Volts (D.C.)	**Resistance (OHMS ± 10%) at 25°C**	
	Continuous Duty	**Intermittent Duty**
6	10.3	1.6
12	41.0	6.5
24	165.0	26.0
110	3780.0	600.0
Other Coils and Duty Cycles Available Upon Request		

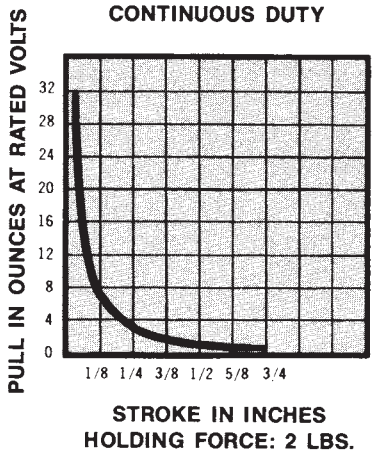

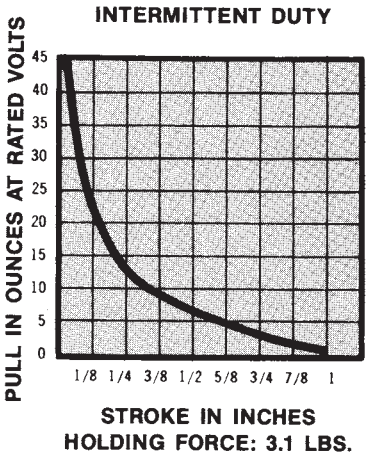

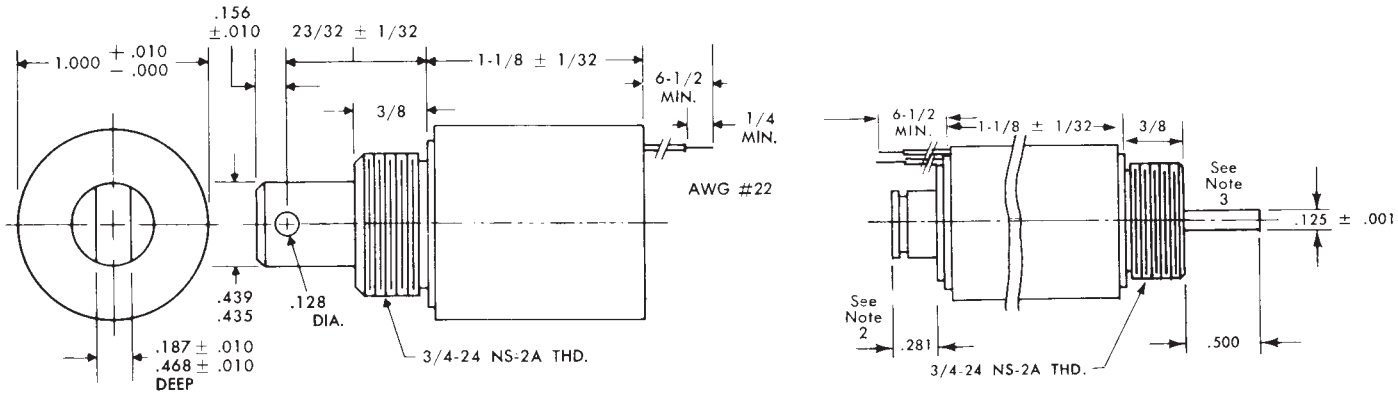

Notes:
1. Solenoid shown in energized position.
2. .281 Plunger configuration shown supplied for spring return only.
3. Largest size thread that may be threaded on push rod #5.
4. Push force approximately 90% of pull forces shown.

Type C16-18

Specifications	
Size	1″ Diameter x 1⅛″ Long (From Mounting Surface)
Weight	4 Oz. Max.
Mounting	¾-24 Threaded Bushing (Nut and Lockwasher Supplied)
Dielectric Strength	500 VRMS
Insulation Material	Class "A" (105° C)
Life Expectancy	10 Million Cycles at Rated Load
Nominal Coil Power	Continuous Duty—4 Watts Intermittent Duty (10%)—19 Watts (One Minute Max. on Time)

Standard Coils

Nominal Volts (D.C.)	Resistance (OHMS ± 10%) at 25°C	
	Continuous Duty	Intermittent Duty
6	9	1.9
12	36	7.6
24	144	30.0
110	3306	696.0

Other Coils and Duty Cycles Available Upon Request

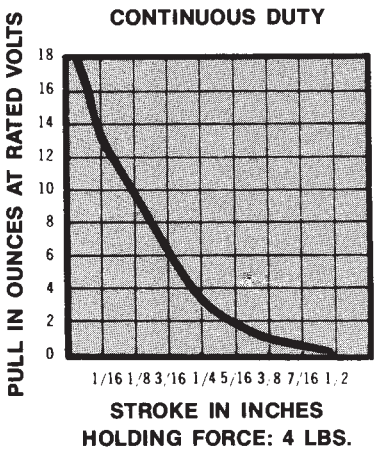

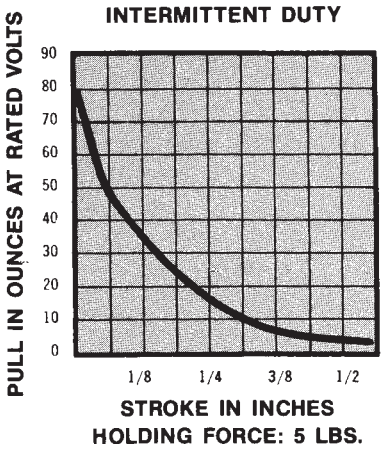

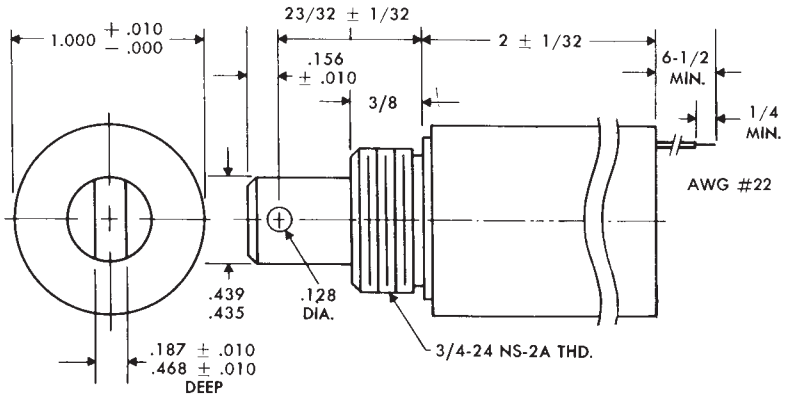

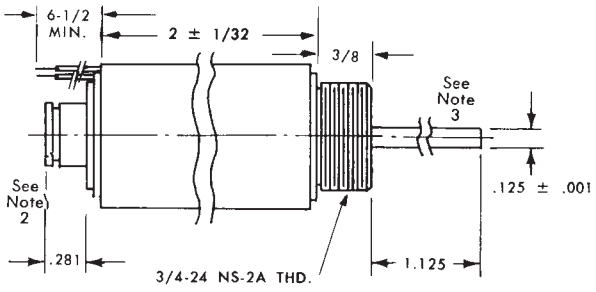

Notes:
1. Solenoid shown in energized position.
2. .281 Plunger configuration shown supplied for spring return only.
3. Largest size thread that may be threaded on push rod #5.
4. Push force approximately 90% of pull forces shown.

Type C16-32

Specifications	
Size	1″ Diameter x 2″ Long (From Mounting Surface)
Weight	5½ Oz. Max.
Mounting	¾-24 Threaded Bushing (Nut and Lockwasher Supplied)
Dielectric Strength	500 VRMS
Insulation Material	Class "A" (105° C)
Life Expectancy	10 Million Cycles at Rated Load
Nominal Coil Power	Continuous Duty—5.5 Watts Intermittent Duty (10%)—38 Watts (One Minute Max. on Time)

Standard Coils

Nominal Volts (D.C.)	Resistance (OHMS ± 10%) at 25°C	
	Continuous Duty	Intermittent Duty
6	6.5	.95
12	26.0	3.80
24	105.0	15.00
110	2405	348.0
Other Coils and Duty Cycles Available Upon Request		

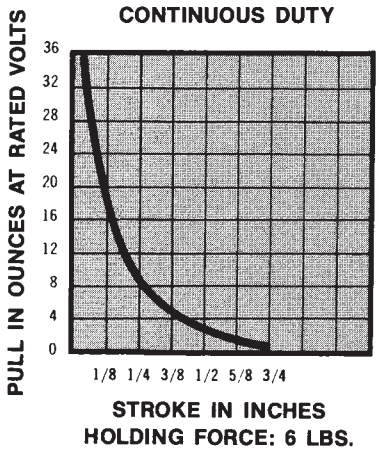

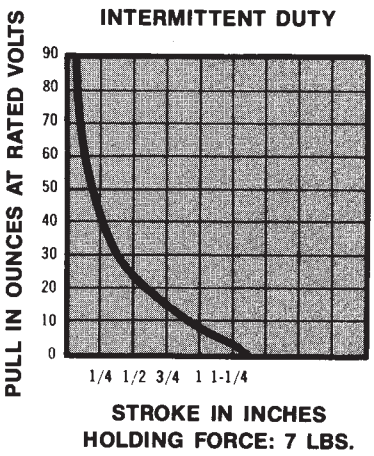

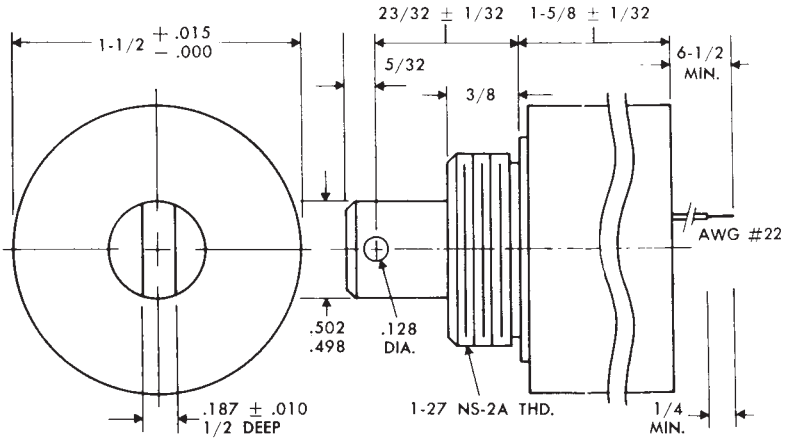

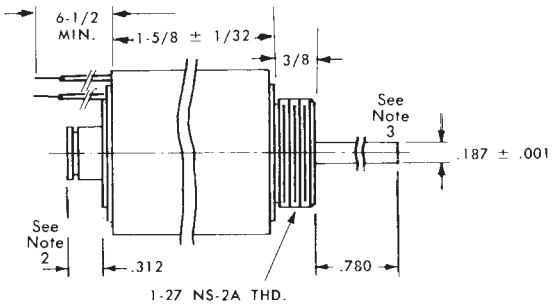

Notes:
1. Solenoid shown in energized position.
2. .312 Plunger configuration shown supplied for spring return only.
3. Largest size thread that may be threaded on push rod #10.
4. Push force approximately 90% of pull forces shown.

Type C24-26

Specifications	
Size	1½" Diameter x 1⅝" Long (From Mounting Surface)
Weight	10 Oz. Max.
Mounting	1-27 Threaded Bushing (Nut and Lockwasher Supplied)
Dielectric Strength	500 VRMS
Insulation Material	Class "A" (105° C)
Life Expectancy	10 Million Cycles at Rated Load
Nominal Coil Power	Continuous Duty—7 Watts Intermittent Duty (10%)—40 Watts (One Minute Max. on Time)

Standard Coils		
Nominal Volts (D.C.)	**Resistance (OHMS ± 10%) at 25°C**	
	Continuous Duty	**Intermittent Duty**
6	5.0	.9
12	20.6	3.6
24	82.0	14.0
110	1890.0	331.0
Other Coils and Duty Cycles Available Upon Request		

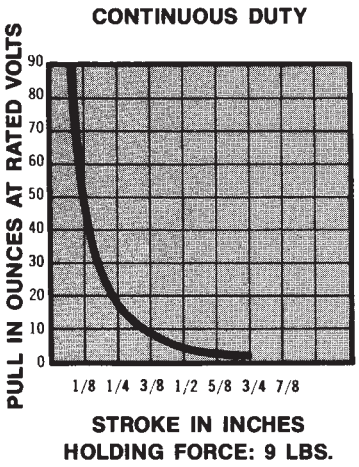

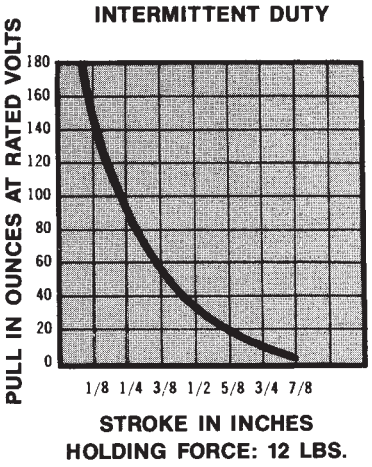

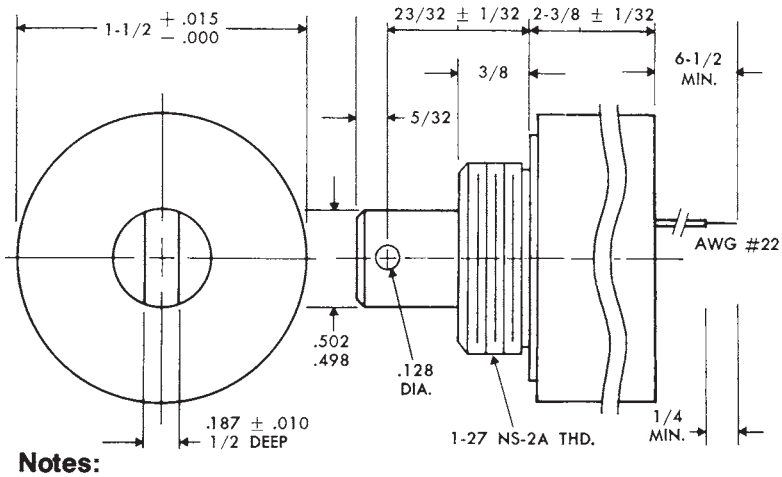

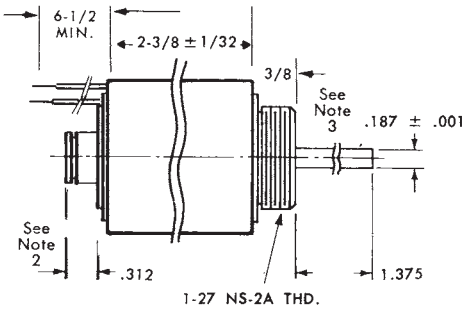

Notes:
1. Solenoid shown in energized position.
2. .312 Plunger configuration shown supplied for spring return only.
3. Largest size thread that may be threaded on push rod #10.
4. Push force approximately 90% of pull forces shown.

Type C24-38

Specifications	
Size	1½" Diameter x 2⅜" Long (From Mounting Surface)
Weight	18 Oz. Max.
Mounting	1-27 Threaded Bushing (Nut and Lockwasher Supplied)
Dielectric Strength	500 VRMS
Insulation Material	Class "A" (105° C)
Life Expectancy	10 Million Cycles at Rated Load
Nominal Coil Power	Continuous Duty—10 Watts Intermittent Duty (10%)—60 Watts (One Minute Max. on Time)

Standard Coils		
Nominal Volts (D.C.)	**Resistance (OHMS ± 10%) at 25°C**	
	Continuous Duty	**Intermittent Duty**
6	3.6	.6
12	14.5	2.4
24	58.0	9.6
110	1323.0	220.0
Other Coils and Duty Cycles Available Upon Request		

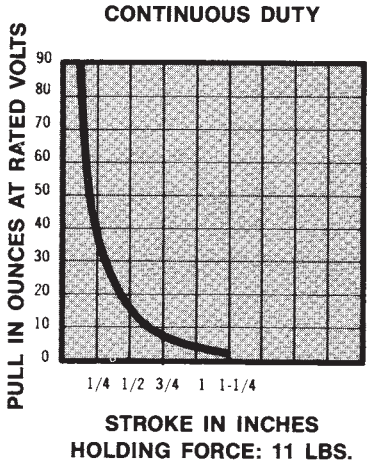

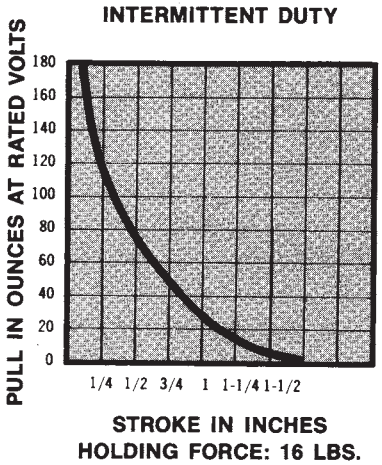

OCEAN CHIPS
Океан Электроники
Поставка электронных компонентов

Компания «Океан Электроники» предлагает заключение долгосрочных отношений при поставках импортных электронных компонентов на взаимовыгодных условиях!

Наши преимущества:

- Поставка оригинальных импортных электронных компонентов напрямую с производств Америки, Европы и Азии, а так же с крупнейших складов мира;
- Широкая линейка поставок активных и пассивных импортных электронных компонентов (более 30 млн. наименований);
- Поставка сложных, дефицитных, либо снятых с производства позиций;
- Оперативные сроки поставки под заказ (от 5 рабочих дней);
- Экспресс доставка в любую точку России;
- Помощь Конструкторского Отдела и консультации квалифицированных инженеров;
- Техническая поддержка проекта, помощь в подборе аналогов, поставка прототипов;
- Поставка электронных компонентов под контролем ВП;
- Система менеджмента качества сертифицирована по Международному стандарту ISO 9001;
- При необходимости вся продукция военного и аэрокосмического назначения проходит испытания и сертификацию в лаборатории (по согласованию с заказчиком);
- Поставка специализированных компонентов военного и аэрокосмического уровня качества (Xilinx, Altera, Analog Devices, Intersil, Interpoint, Microsemi, Actel, Aeroflex, Peregrine, VPT, Syfer, Eurofarad, Texas Instruments, MS Kennedy, Miteq, Cobham, E2V, MA-COM, Hittite, Mini-Circuits, General Dynamics и др.);

Компания «Океан Электроники» является официальным дистрибьютором и эксклюзивным представителем в России одного из крупнейших производителей разъемов военного и аэрокосмического назначения **«JONHON»**, а так же официальным дистрибьютором и эксклюзивным представителем в России производителя высокотехнологичных и надежных решений для передачи СВЧ сигналов **«FORSTAR»**.

AVIC JONHON

«JONHON» (основан в 1970 г.)

Разъемы специального, военного и аэрокосмического назначения:

(Применяются в военной, авиационной, аэрокосмической, морской, железнодорожной, горно- и нефтедобывающей отраслях промышленности)

«FORSTAR» (основан в 1998 г.)

ВЧ соединители, коаксиальные кабели, кабельные сборки и микроволновые компоненты:

(Применяются в телекоммуникациях гражданского и специального назначения, в средствах связи, РЛС, а так же военной, авиационной и аэрокосмической отраслях промышленности).

FORSTAR®

Телефон: 8 (812) 309-75-97 (многоканальный)
Факс: 8 (812) 320-03-32
Электронная почта: ocean@oceanchips.ru
Web: http://oceanchips.ru/
Адрес: 198099, г. Санкт-Петербург, ул. Калинина, д. 2, корп. 4, лит. А