RJD

Rechargeable LI-ION Batteries

FEATURES	**Highest power rating with long life – Standard parts stocked***
APPLICATIONS	**Wearable electronic & IoT devices – Memory backup circuits**

Nominal Voltage	**3.7VDC (4.2VDC to 3.0VDC)**	
Operating Temperature Range	**-20°C to +60°C**	
Storage Temperature Range	**-20°C to +60°C (one month) -20°C to +40°C (up to 3 months) -20°C to +25°C (up to 6 months)**	
Storage Capacity	**Nominal**	**See part listing 0.2C rate, 3.0V cut-off**
	Minimum	**See part listing 0.2C rate, 3.0V cut-off**
Charging Voltage	**4.2VDC ± 0.03V**	
Charging current	**0.5CA**	
Charging Time	**< 3.0 hours**	
Charging method	**Constant Current/ Constant Voltage (CCCV)**	
Discharge Current	**Standard**	**0.2CA**
	Maximum	**2CA**
Discharge Cut-off Voltage	**3.0V**	
Anode	**Graphite**	
Cathode	**Lithium nickel manganese cobalt oxide**	
Certification	**UL1642 – MH28281**	

Markings

Standard (bare cells)	Non-Standard Terminations
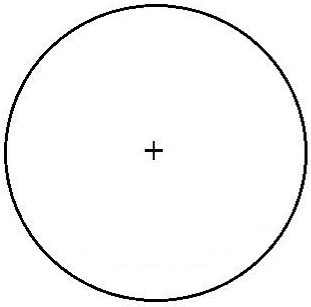 Front 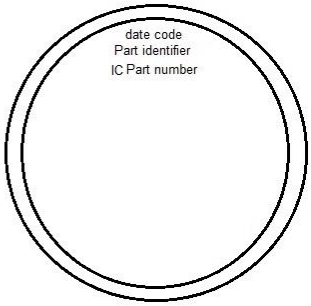 Back	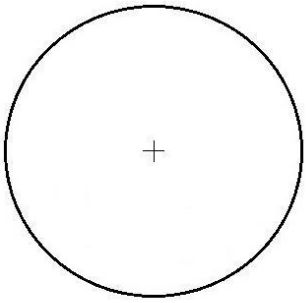 Front Back

©2019 Illinois Capacitor

North America
Tel: (847) 675-1760
sales@illcap.com

Asia
Tel: 852 2793 0931
sales@illcap.com.hk

RJD

Rechargeable LI-ION Batteries

Standard Coin Cell Options

IC Part Number	Capacity (mAh)		Charging Current (mA)	Discharge Current (mA)		Maximum Internal Resistance (mΩ)	Appox. Weight (g)	Maximum Diameter (D mm)	Thickness (T mm)
	Nom.	Min.		STD	MAX				
RJD2032C1	85	80	40	16	160	700	3.4	20.02	3.5
RJD2048	120	110	55	22	220	700	4.2	20.02	5.0
RJD2430C1	110	104	52	21	208	500	4.5	24.5	3.15
RJD2440	150	140	70	28	280	800	5.4	24.5	4.3
RJD2450	200	190	95	38	380	500	6.5	24.5	5.4
RJD3032	200	190	95	38	380	600	7.2	30	3.4
RJD3048	300	290	145	58	580	400	9.3	30	4.9
RJD3555	500	490	245	98	980	200	14.1	35.2	5.7

Standard PCM & Connector Options

IC Part Number	Capacity (mAh)		Charging Current (mA)	Discharge Current (mA)		Maximum Internal Resistance (mΩ)	Approx. Weight (g)	Maximum Diameter (D mm)	Thickness (T mm)
	Nom.	Min.		STD	MAX				
RJD3032HPPV30M	200	190	95	38	380	900	7.2	30	4.2
RJD3048HPPV30M	300	290	145	58	580	700	9.3	30	5.7
RJD3555HPPV30M	500	490	245	98	980	500	14.1	35.2	6.4

Standard Leaded Options

IC Part Number	Capacity (mAh)		Charging Current (mA)	Discharge Current (mA)		Maximum Internal Resistance (mΩ)	Approx. Weight (g)	Maximum Diameter (D mm)	Thickness (T mm)
	Nom.	Min.		STD	MAX				
RJD2032C1ST1	85	80	40	16	160	700	3.4	20.02	3.9
RJD2048ST1	120	110	55	22	220	700	4.2	20.02	5.4
RJD2430C1ST1	110	104	52	21	208	500	4.5	24.5	3.55
RJD2440ST1	150	140	70	28	280	800	5.4	24.5	4.7
RJD2450ST1	200	190	95	38	380	500	6.5	24.5	5.8
RJD3032ST1	200	190	95	38	380	600	7.2	30	3.8
RJD3048ST1	300	290	145	58	580	400	9.3	30	5.3
RJD3555ST1	500	490	245	98	980	200	14.1	35.2	6.1

©2019 Illinois Capacitor

ILLINOIS CAPACITOR
a Cornell Dubilier Brand

North America
Tel: (847) 675-1760
sales@illcap.com

Asia
Tel: 852 2793 0931
sales@illcap.com.hk

Cell Dimensions

IC Part Number	Fresh Cell				Cycled cell (after 500 cycles)	
	Shipping (Charged)		Full Charge		Full Charge	
	Maximum Diameter (D mm)	Maximum Thickness (T mm)	Maximum Diameter (D mm)	Maximum Thickness (T mm)	Maximum Diameter (D mm)	Maximum Thickness (T mm)
RJD2032C1*	20.02	3.5	20	3.6	20	3.7
RJD2048*	20.02	5	20	5.2	20	5.3
RJD2430C1*	24.5	3.15	24.5	3.25	24.5	3.3
RJD2440*	24.5	4.3	24.5	4.4	24.5	4.5
RJD2450*	24.5	5.4	24.5	5.5	24.5	5.6
RJD3032*	30	3.4	30	3.5	30	3.6
RJD3048*	30	4.9	30	4.9	30	5.2
RJD3555*	35.2	5.7	35.2	5.8	35.2	6.3

Part Numbering

RJD 2032C1	A	B	C	D	E
Section 1	Section 2	Section 3	Section 4	Section 5	Section 6

Section 1 – IC standard part number (Bare cell)

Section 2 –Termination style

Termination Styles

Contact IC for detailed drawings

Bare Cell - (Standard)	Style - T0
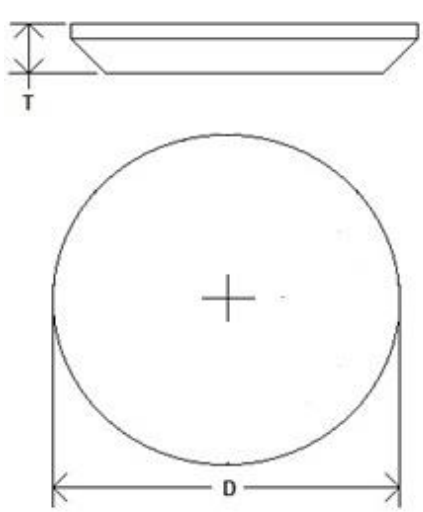	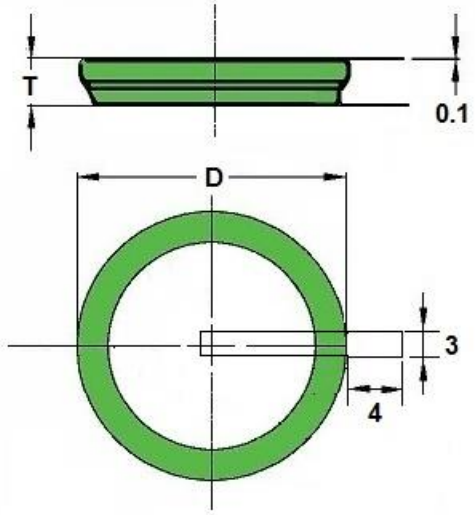

©2019 Illinois Capacitor
North America
Tel: (847) 675-1760
sales@illcap.com

Asia
Tel: 852 2793 0931
sales@illcap.com.hk

RJD

Rechargeable LI-ION Batteries

Style - ST1

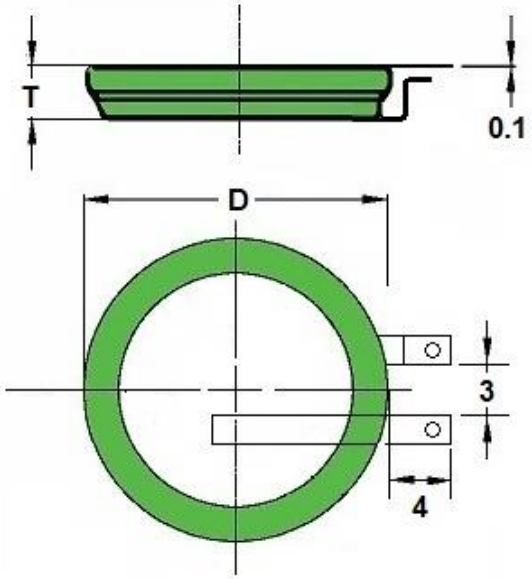

Style - T1

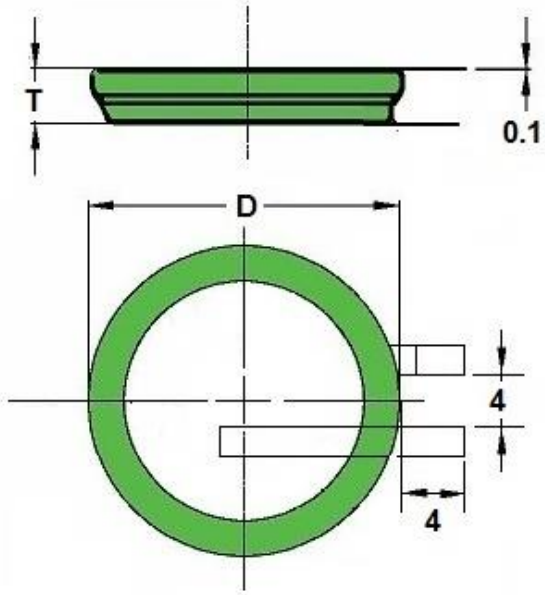

Style – SP8

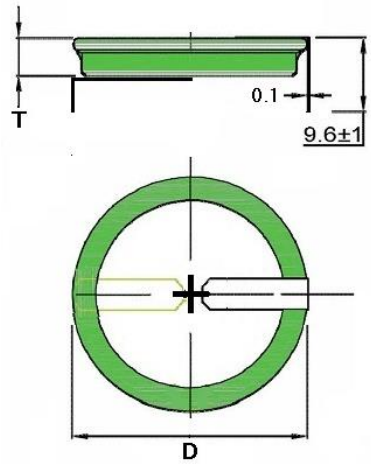

Style - ST9

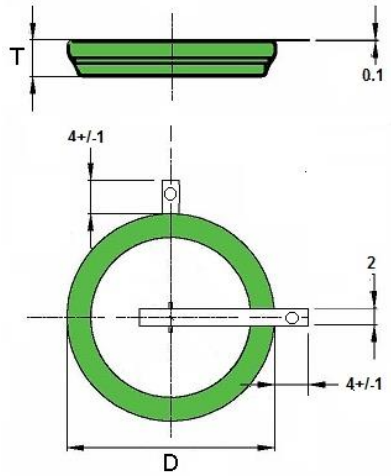

Style - SP9

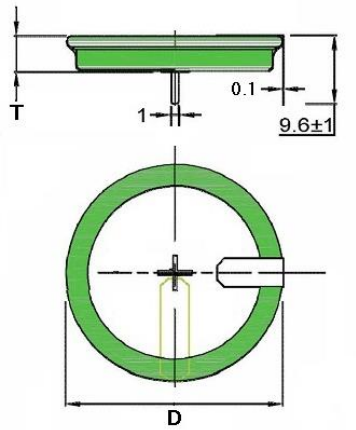

Style - WL

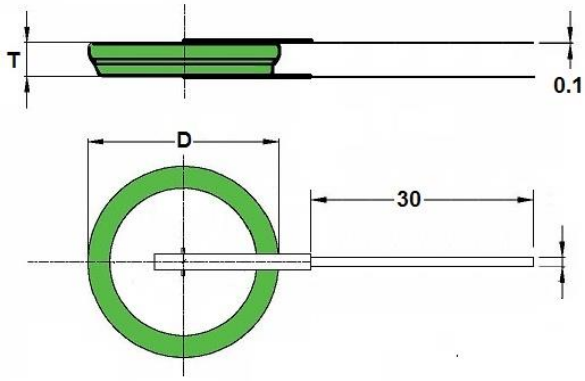

©2019 Illinois Capacitor

North America
Tel: (847) 675-1760
sales@illcap.com

Asia
Tel: 852 2793 0931
sales@illcap.com.hk

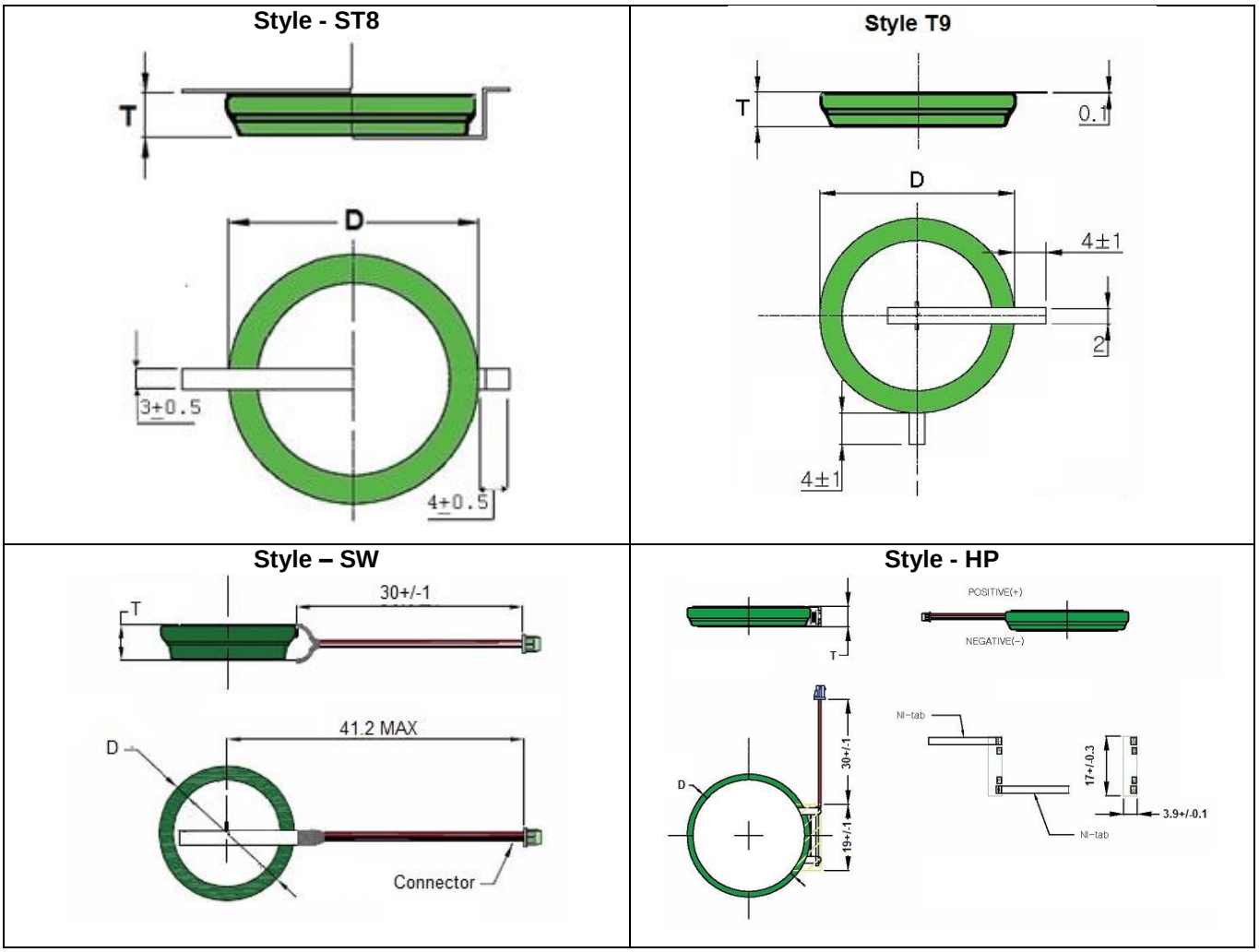

Contact IC if other termination type is preferred

Section 3 – Connector supplied with PCM indicator, with connector is standard (Code P)

Connector with PCM	Connector without PCM
P	**N**

Section 4 - Wire gauge for types SW and HP, 30 gauge is standard (Code V).
*Contact IC if a different wire gauge is needed.

Section 5 – Lead Length for types SW and HP, 30mm. is the standard. (Code 30)
*Contact IC if a different wire length is needed.

Section 6 – Connector option for types SW and HP, Molex is standard (Code M)

©2019 Illinois Capacitor
North America
Tel: (847) 675-1760
sales@illcap.com

Asia
Tel: 852 2793 0931
sales@illcap.com.hk

Connector types

IC Code	M (Standard)	J
Connector Manufacturer	Molex	JST
Connector Part Number	51021-0200	ACHR-02V-S
Drawing	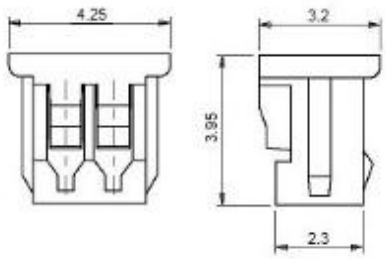	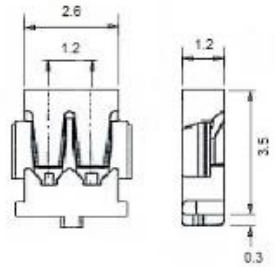
Detailed specifications location	http://www.molex.com/pdm_docs/sd/510210200_sd.pdf	http://www.jst.com/home23.html

HP lead style are supplied with a PCM (Protection Circuit Module).
PCM Type: Powerlogics part # RJD 201 or RJD 9901 (see Protection Circuit Module section below for complete specifications).

PCM option

Protection Circuit Module

(Only for HP lead style)

Specification	RJD 9901	RJD 201
PCM used with indicated corresponding bare cell part number	RJD3032 RJD3048 RJD3555	RJD2032C1, RJD2048, RJD2430C1, RJD2440, RJD2450
Main IC	SP31ABE	MP29A
PCB	SALTEK, APEX	SALTEK, APEX
FET	X	X
PTC	MicroSMD175F-2 (TE)	X
L terminal	X	X
Capacitor	2Point	2Point
Resistor	2Point	1Point
Dimension(L*W*T)	16.9*3.9*2.0mm	11.0X3.5X1.75mm
Wake-up Function	NO	NO
Overcharge Detection Voltage	4.275V ± 25mV	4.25V~4.3V
Overcharge Detection Delay Time	700.0mSec ~ 1300mSec	800.0mSec ~ 1200mSec
Over-Discharge Detection Voltage	2.242V~2.358V	2.76V~2.84V
Over-Discharge Detection Delay Time	14.0mSec~26.0mSec	16.0mSec~24.0mSec

©2019 Illinois Capacitor
North America
Tel: (847) 675-1760
sales@illcap.com

Asia
Tel: 852 2793 0931
sales@illcap.com.hk

Over-Discharge Current Detection	1.2 ~ 4.0A	0.77 ~ 1.76A
Overcharge Current Detection	0.9A ~ 4.4A	0.9A ~ 4.4A
Over-Discharge Current Protection Delay Time	8.0mSec ~ 16.0mSec	4.8mSec ~ 7.2mSec
Short Detection Delay Time	100μs ~ 500μs	280μs ~ 560μs
PCM Impedance	< 220mΩ	< 46mΩ
Operation Current Consumption	Max 6.0μA(TYP 4.0μA)	Max 6.0μA(TYP 3.0μA)
Power-Down Mode Current Consumption	Max 0.1μA	Max 0.1μA
Distance Between B+, B- Tab	13.93mm	5.25mm

Battery Operation Instruction:

Charging

a. Charge the battery in a temperature range of 0℃ to + 45℃.
b. Charge the battery at a constant current of 0.5C until 4.20VDC±0.03VDC per cell is attained. Charge rates greater than 1C are NOT recommended. (C: Rated Capacity of Battery)
c. Maintain charge voltage at 4.20VDC per cell for 3.0 hours (recommended for maximum capacity).
** Use a constant current, constant voltage (CC/CV) lithium-ion (Li+) battery charge controller.*
** Do not continue to charge battery over specified time.*

Discharging

a. Recommended cut-off voltage to 3.0VDC. Recommended maximum discharge rate is 2C at constant current.
b. For maximum performance, discharge the battery in a temperature range of –20℃ to + 45℃.

Protection Circuit

Protection circuit can be provided upon request. However, protection circuit may be omitted for most applications without damaging performance and safety. Please consult our engineering staff for technical advice.

Storage Recommendations

Storage Temperature and Humidity
Store the battery within a temperature range of –20°C to +45℃, low humidity, non-corrosive gas atmosphere and no condensation on the battery.

Long Period Storage

In case of a long storage period (more than 3 months), store the battery within a temperature range of –20°C to +25°C, low humidity and non-corrosive gas atmosphere. Extended storage periods will reduce the capacity of the battery.

Standard Test Conditions

Unless otherwise specified, all tests are conducted at 25°C ± 3°C and relative humidity of 65% ± 20%.

©2019 Illinois Capacitor
North America
Tel: (847) 675-1760
sales@illcap.com

Asia
Tel: 852 2793 0931
sales@illcap.com.hk

Electrical Characteristics

Standard Charge and Discharge Conditions

A. The "Standard Charge" means charging the Cell with initial charge current (0.5C) and with a constant voltage of 4.2VDC (+ 0.03VDC) and the specified cut-off current (see table 1) at 25°C for 3 hours.
B. Standard discharge means discharging cell with constant discharge current (0.2C)(see table 1) and with 3.0VDC cut-off voltage at 25°C
C. Initial Discharge Capacity
D. The initial capacity measured under the standard test conditions
E. Initial Discharge Capacity: See standard part listing
F. Initial Internal resistance: see standard part listing
G. Internal resistance measured at 1 kHz after Standard Charge.
H. Cycle life (500 cycles with constant charge listed in note A above and constant discharge rate of 0.5C)
I. Temperature dependence of discharge capacity. See discharge table below.
J. Relative capacity at each temperature measured with a constant discharge current (0.2C) with 3.0VDC cutoff after the standard charge shown below.

IC Part Number	Discharge Temperature			
	-20°C	-10°C	25°C	60°C
RJD2032C1	>60 %	>80%	100 %	>95%
RJD2048	>60 %	>80%	100 %	>80%
RJD2430C1	>60 %	>80%	100 %	>95%
RJD2440	>60 %	>80%	100 %	>80%
RJD2450	>60 %	>80%	100 %	>80%
RJD3032	>60 %	>80%	100 %	>80%
RJD3048	>60 %	>80%	100 %	>80%
RJD3555	>60 %	>80%	100 %	>80%

Table 1

IC Part Number	Charging Current (0.5C) (mA)	Constant Discharge Current (0.2C) (mA)	Charging end condition (at CV mode) (mA)	Capacity after 500 cycles (mAh)
RJD2032C1	40	16	2.4	56
RJD2048	60	24	3.6	77
RJD2430C1	55	22	3.3	72.8
RJD2440	75	30	4.5	98
RJD2450	100	40	6	133
RJD3032	100	40	6	133
RJD3048	150	60	9	203
RJD3555	250	100	15	350

©2019 Illinois Capacitor
North America
Tel: (847) 675-1760
sales@illcap.com

Asia
Tel: 852 2793 0931
sales@illcap.com.hk

Discharge Characteristics on Current Load (C-Rate)

Relative capacity at each load, measured with constant discharge current 0.2C, 0.5C, 1.0C, 2C with 3.0VDC cut-off after Standard Charge shown below.

Charge Current	Discharge Current			
Standard Charge	0.2 CA	0.5 CA	1 CA	2.0 CA
	100 %	> 95 %	> 90 %	> 50%

Shipment

The Cell shall be shipped with 30% of the nominal voltage. (Nominal Cell voltage range: 3.7 ~ 3.8 V).
30% SOC is only for air transport.

Storage Characteristics

After storage at the conditions listed below, the battery is measured at the standard charge and discharge conditions stated under the electrical characteristics.

Storage Condition	Charge State	Capacity Retention	Capacity Recovery
20 days at 60°C	Shipping charge	-	> 85%
20 days at 60°C	Full charge	> 70%	> 85%
60 days at 60°C	Full charge	> 40%	> 60%
30 days at 60°C, 90%RH	Full charge	> 40%	> 70%

Safety Test

Test	Test Method	Criteria
High Temperature	Storing a cell at 90°C for 4 hours after being charged to 4.2VDC	No leakage
High Temperature and High Humidity	Storing a cell at 60°C and 90% RH for 1 week after being charged to 4.2VDC	No leakage
Thermal Shock Test	Store a fully charged cell (4.2VDC) at 60°C for 2 hours then at -20°C for 2 hours. 10 cycles with a maximum transition time of 5 minutes.	No leakage
Hot Box Test	A cell is to be heated in a gravity convection oven. The temperature of the oven is to be raised 5°C+/- 2°C per minute to a temperature of 130°C and remain at that temperature for 10 minutes	No explosion, No fire
Overcharge Test	Charge the test samples with constant current (3C) and voltage 4.5VDC. Test samples remain on test for 2.5 hours	No explosion, No fire
Impact Test	A test cell is to be placed on a flat surface. The bar of 9.1 kg weight and 15.8 mm diameter is dropped from a height of 610 mm onto the cell.	No explosion, No fire

©2019 Illinois Capacitor
North America
Tel: (847) 675-1760
sales@illcap.com

Asia
Tel: 852 2793 0931
sales@illcap.com.hk

Short-Circuit Test	A cell is to be short-circuited by connecting the positive and negative terminals of the battery with copper wire having a maximum resistance load of 100mΩ.	No fire or explosion, until battery is completely discharged
Nail Test	A stainless steel nail having a diameter of 4.0 mm is punched through the cell until the nail has passed through the opposite side of the cell.	No explosion, No fire
Applying Pressure	Placing pressure on entire surface of a fully charged cell with 7kg for 72 hours	No leakage, No weight decrease

Precautions and Safety Instructions

Lithium-Ion rechargeable batteries subjected to abusive conditions can become damaged and/or cause personal injury. Please read and observe the standard battery precautions below before using.

Note 1. The customer is required to contact Illinois Capacitor in advance, if and when the customer needs other applications or operating conditions other than those described in this document.

Note 2. Illinois Capacitor will take no responsibility for any accident where the cell is used under other conditions than those described in this document.

Precautions and Safety Instructions:

a. Do not expose the battery to extreme heat or flame.
b. Do not short circuit, over-charge or over-discharge the battery.
c. Do not subject the battery to strong mechanical shocks.
d. Do not immerse the battery in water or sea water, or get it wet.
e. Do not reverse the polarity of the battery for any reason.
f. Do not disassemble or modify the battery.
g. Do not remove charge/discharge protection circuitry.
h. Do not handle or store with metallic objects like necklaces, coins or hairpins, etc.
i. Do not use the battery if possible damage or deformation is present.
j. Do not connect battery to the plug socket or car-cigarette-plug.
k. Do not directly solder onto the battery. Only spot weld lead onto battery. Soldering iron temperature should be limited to 350°C with a soldering time of <5 seconds.
l. Do not place batteries in a solder bath.
m. Do not touch a leaked battery directly.
n. D o not use for other equipment.
o. Do not mix Lithium-ion batteries.
p. Do not use or leave the battery in direct sunlight (or in heated car by sunshine).
q. Keep battery away from children.
r. Use only the specified charger and observe charging requirement.
s. Do not drive a nail into battery or strike battery with another battery or insert a screw into the battery
t. Do not smash or throw battery.
u. Recharge the battery every 6 months.
v. Follow recommended charging conditions when charging battery.

©2019 Illinois Capacitor
North America
Tel: (847) 675-1760
sales@illcap.com

Asia
Tel: 852 2793 0931
sales@illcap.com.hk

Warnings:

a. Do not swallow. Keep out of reach of infants and children. If swallowed call physician immediately.
b. Do not put battery in microwave or pressure cooker.
c. Do not use battery together with a primary battery, such as dry battery types or batteries with different capacities.
d. Do not replace battery with a different type or model.
e. Discontinue use of battery if an unusual odor, discoloration, deformation, internal heating or other unusual characteristic changes are detected.
f. Do not have any leaked electrolyte come in contact with eyes. If contact occurs flush eyes immediately with water and consult a doctor.
g. If charging does not stop after expected charging time, stop charging battery.

Requirement for Safety Assurance

For safety assurance, please discuss the equipment design, its system and protection circuit of Lithium-ion battery with Illinois capacitor in advance.

Consult with Illinois Capacitor about high rate current, rapid charge and special application.

©2019 Illinois Capacitor

North America
Tel: (847) 675-1760
sales@illcap.com

Asia
Tel: 852 2793 0931
sales@illcap.com.hk

OCEAN CHIPS
Океан Электроники
Поставка электронных компонентов

Компания «Океан Электроники» предлагает заключение долгосрочных отношений при поставках импортных электронных компонентов на взаимовыгодных условиях!

Наши преимущества:

- Поставка оригинальных импортных электронных компонентов напрямую с производств Америки, Европы и Азии, а так же с крупнейших складов мира;
- Широкая линейка поставок активных и пассивных импортных электронных компонентов (более 30 млн. наименований);
- Поставка сложных, дефицитных, либо снятых с производства позиций;
- Оперативные сроки поставки под заказ (от 5 рабочих дней);
- Экспресс доставка в любую точку России;
- Помощь Конструкторского Отдела и консультации квалифицированных инженеров;
- Техническая поддержка проекта, помощь в подборе аналогов, поставка прототипов;
- Поставка электронных компонентов под контролем ВП;
- Система менеджмента качества сертифицирована по Международному стандарту ISO 9001;
- При необходимости вся продукция военного и аэрокосмического назначения проходит испытания и сертификацию в лаборатории (по согласованию с заказчиком);
- Поставка специализированных компонентов военного и аэрокосмического уровня качества (Xilinx, Altera, Analog Devices, Intersil, Interpoint, Microsemi, Actel, Aeroflex, Peregrine, VPT, Syfer, Eurofarad, Texas Instruments, MS Kennedy, Miteq, Cobham, E2V, MA-COM, Hittite, Mini-Circuits, General Dynamics и др.);

Компания «Океан Электроники» является официальным дистрибьютором и эксклюзивным представителем в России одного из крупнейших производителей разъемов военного и аэрокосмического назначения **«JONHON»**, а так же официальным дистрибьютором и эксклюзивным представителем в России производителя высокотехнологичных и надежных решений для передачи СВЧ сигналов **«FORSTAR»**.

AVIC JONHON

«JONHON» (основан в 1970 г.)

Разъемы специального, военного и аэрокосмического назначения:

(Применяются в военной, авиационной, аэрокосмической, морской, железнодорожной, горно- и нефтедобывающей отраслях промышленности)

«FORSTAR» (основан в 1998 г.)

ВЧ соединители, коаксиальные кабели, кабельные сборки и микроволновые компоненты:

(Применяются в телекоммуникациях гражданского и специального назначения, в средствах связи, РЛС, а так же военной, авиационной и аэрокосмической отраслях промышленности).

FORSTAR®

Телефон: 8 (812) 309-75-97 (многоканальный)
Факс: 8 (812) 320-03-32
Электронная почта: ocean@oceanchips.ru
Web: http://oceanchips.ru/
Адрес: 198099, г. Санкт-Петербург, ул. Калинина, д. 2, корп. 4, лит. А