LM26

LM26 SOT-23, +/-3C Accurate, Factory Preset Thermostat

Literature Number: SNIS115Q

National Semiconductor

September 9, 2009

LM26

SOT-23, ±3°C Accurate, Factory Preset Thermostat

General Description

The LM26 is a precision, single digital-output, low-power thermostat comprised of an internal reference, DAC, temperature sensor and comparator. Utilizing factory programming, it can be manufactured with different trip points as well as different digital output functionality. The trip point (T_{OS}) can be preset at the factory to any temperature in the range of −55°C to +110°C in 1°C increments. The LM26 has one digital output (OS/$\overline{OS}$/US/$\overline{US}$), one digital input (HYST) and one analog output (V_{TEMP}). The digital output stage can be preset as either open-drain or push-pull. In addition, it can be factory programmed to be active HIGH or LOW. The digital output can be factory programmed to indicate an over temperature shutdown event (OS or $\overline{OS}$) or an under temperature shutdown event (US or $\overline{US}$). When preset as an overtemperature shutdown ($\overline{OS}$) it will go LOW to indicate that the die temperature is over the internally preset T_{OS} and go HIGH when the temperature goes below (T_{OS}–T_{HYST}). Similarly, when preprogrammed as an undertemperature shutdown (US) it will go HIGH to indicate that the temperature is below T_{US} and go LOW when the temperature is above (T_{US}+T_{HYST}). The typical hysteresis, T_{HYST}, can be set to 2°C or 10°C and is controlled by the state of the HYST pin. A V_{TEMP} analog output provides a voltage that is proportional to temperature and has a −10.82mV/°C output slope.

Available parts are detailed in the ordering information. For other part options, contact a National Semiconductor Distributor or Sales Representative for information on minimum order qualification. The LM26 is currently available in a 5-lead SOT-23 package.

Applications

- Microprocessor Thermal Management
- Appliances
- Portable Battery Powered Systems
- Fan Control
- Industrial Process Control
- HVAC Systems
- Remote Temperature Sensing
- Electronic System Protection

Features

- Internal comparator with pin programmable 2°C or 10°C hysteresis
- No external components required
- Open Drain or push-pull digital output; supports CMOS logic levels
- Internal temperature sensor with V_{TEMP} output pin
- V_{TEMP} output allows after-assembly system testing
- Internal voltage reference and DAC for trip-point setting
- Currently available in 5-pin SOT-23 plastic package
- Excellent power supply noise rejection
- UL Recognized Component

Key Specifications

Power Supply Voltage	2.7V to 5.5V
Power Supply Current	40µA (max) 20µA (typ)
Hysteresis Temperature	2°C or 10°C (typ)

Temperature Trip Point Accuracy

Temperature Range	LM26CIM
−55°C to +110°C	±3°C (max)
+120°C	±4°C (max)

LM26CIM5-TPA Simplified Block Diagram and Connection Diagram

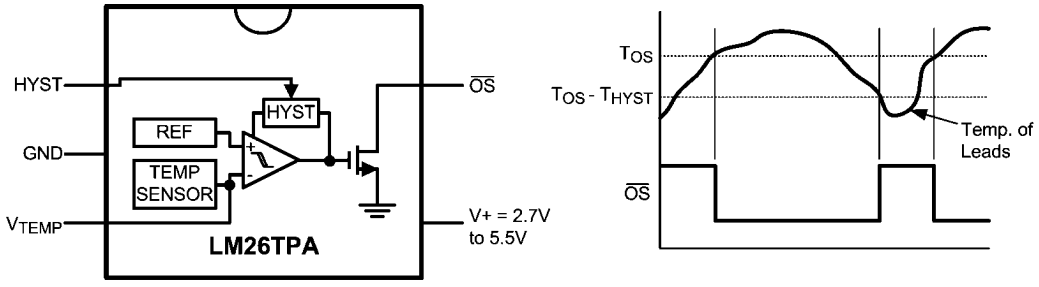

HYST=GND for 10°C Hysteresis
HYST = V+ for 2°C Hysteresis
$V_{TEMP} = (-3.479 \times 10^{-6} \times (T-30)^2) + (-1.082 \times 10^{-2} \times (T-30)) + 1.8015V$

10132301

The LM26CIM5-TPA has a fixed trip point of 85°C.
For other trip point and output function availability,
please see ordering information or contact National Semiconductor.

© 2011 National Semiconductor Corporation

Ordering Information

For more detailed information on the suffix meaning see the part number template at the end of the Electrical Characteristics Section. Contact National Semiconductor for other set points and output options.

Order Number Bulk Rail	3000 Units in Tape & Reel	Top Mark	NS Package Number	Trip Point Setting	Output Function
LM26CIM5-BPB	LM26CIM5X-BPB	TBPB	MA05B	–45°C	Open Drain $\overline{US}$
LM26CIM5-DPB	LM26CIM5X-DPB	TDPB	MA05B	–25°C	Open Drain $\overline{US}$
LM26CIM5-HHD	LM26CIM5X-HHD	THHD	MA05B	0°C	Push Pull US
LM26CIM5-NPA	LM26CIM5X-NPA	TNPA	MA05B	45°C	Open Drain $\overline{OS}$
LM26CIM5-PHA	LM26CIM5X-PHA	TPHA	MA05B	50°C	Open Drain $\overline{OS}$
LM26CIM5-RPA	LM26CIM5X-RPA	TRPA	MA05B	65°C	Open Drain $\overline{OS}$
LM26CIM5-SHA	LM26CIM5X-SHA	TSHA	MA05B	70°C	Open Drain $\overline{OS}$
LM26CIM5-SPA	LM26CIM5X-SPA	TSPA	MA05B	75°C	Open Drain $\overline{OS}$
LM26CIM5-TPA	LM26CIM5X-TPA	TTPA	MA05B	85°C	Open Drain $\overline{OS}$
LM26CIM5-VHA	LM26CIM5X-VHA	TVHA	MA05B	90°C	Open Drain $\overline{OS}$
LM26CIM5-VPA	LM26CIM5X-VPA	TVPA	MA05B	95°C	Open Drain $\overline{OS}$
LM26CIM5-XHA	LM26CIM5X-XHA	TXHA	MA05B	100°C	Open Drain $\overline{OS}$
LM26CIM5-XPA	LM26CIM5X-XPA	TXPA	MA05B	105°C	Open Drain $\overline{OS}$
LM26CIM5-YHA	LM26CIM5X-YHA	TYHA	MA05B	110°C	Open Drain $\overline{OS}$
LM26CIM5-YPA	LM26CIM5X-YPA	TYPA	MA05B	115°C	Open Drain $\overline{OS}$
LM26CIM5-ZHA	LM26CIM5X-ZHA	TZHA	MA05B	120°C	Open Drain $\overline{OS}$

Connection Diagram

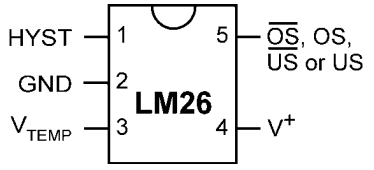

10132302

Pin Descriptions

Pin Number	Pin Name	Function	Connection
1	HYST	Hysteresis control, digital input	GND for 10°C or V+ for 2°C
2	GND	Ground, connected to the back side of the die through lead frame.	System GND
3	V_{TEMP}	Analog output voltage proportional to temperature	Leave floating or connect to a high impedance node.
4	V+	Supply input	2.7V to 5.5V with a 0.1µF bypass capacitor. For PSRR information see *Section Titled NOISE CONSIDERATIONS*.
5	$\overline{OS}$	Overtemperature Shutdown open-drain active low thermostat digital output	Controller interrupt, system or power supply shutdown; pull-up resistor ≥ 10kΩ
	OS	Overtemperature Shutdown push-pull active high thermostat digital output	Controller interrupt, system or power supply shutdown
	$\overline{US}$	Undertemperature Shutdown open-drain active low thermostat digital output	System or power supply shutdown; pull-up resistor ≥ 10kΩ
	US	Undertemperature Shutdown push-pull active high thermostat digital output	System or power supply shutdown

Note: pin 5 functionality and trip point setting are programmed during LM26 manufacture.

Absolute Maximum Ratings (Note 1)

Input Voltage	6.0V
Input Current at any pin (Note 2)	5mA
Package Input Current (Note 2)	20mA
Package Dissipation at T_A = 25°C (Note 3)	500mW
Soldering Information	
SOT23 Package	
Vapor Phase (60 seconds)	215°C
Infrared (15 seconds)	220°C
Storage Temperature	−65°C to + 150°C
ESD Susceptibility (Note 4)	
Human Body Model	2500V
Machine Model	250V

Operating Ratings (Note 1)

Specified Temperature Range	**$T_{MIN} \le T_A \le T_{MAX}$**
LM26CIM	−55°C ≤ T_A ≤ +125°C
Positive Supply Voltage (V+)	+2.7V to +5.5V
Maximum V_{OUT}	+5.5V

LM26 Electrical Characteristics

The following specifications apply for V+ = 2.7V_{DC} to 5.5V_{DC}, and V_{TEMP} load current = 0μA unless otherwise specified. **Boldface limits apply for $T_A = T_J = T_{MIN}$ to T_{MAX};** all other limits $T_A = T_J$ = 25°C unless otherwise specified.

Symbol	Parameter	Conditions	Typical (Note 6)	LM26CIM Limits (Note 7)	Units (Limits)
Temperature Sensor					
	Trip Point Accuracy (Includes V_{REF}, DAC, Comparator Offset, and Temperature Sensitivity errors)	-55°C ≤ T_A ≤ +110°C		±3	°C (max)
		+120°C		±4	°C (max)
	Trip Point Hysteresis	HYST = GND	11		°C
		HYST = V+	2		°C
	V_{TEMP} Output Temperature Sensitivity		−10.82		mV/°C
	V_{TEMP} Temperature Sensitivity Error to Equation: $V_O = (-3.479\times10^{-6}\times(T-30)^2) + (-1.082\times10^{-2}\times(T-30)) + 1.8015V$	−30°C ≤ T_A ≤ 120°C, 2.7V ≤ V+ ≤ 5.5V		**±3**	°C (max)
		−55°C ≤ T_A ≤ 120°C, 4.5V ≤ V+ ≤ 5.5V		**±3**	°C (max)
		T_A = 30°C		±2.5	°C (max)
	V_{TEMP} Load Regulation	Source ≤ 1 μA	0.070		mV
		Sink ≤ 40 μA		**0.7**	mV (max)
	V_{TEMP} Line Regulation	+2.7V ≤ V+ ≤ +5.5V, −30°C ≤ T_A ≤ +120°C	−0.2		mV/V
I_S	Supply Current		16	20 **40**	μA (max) μA (max)
Digital Output and Input					
$I_{OUT(“1”)}$	Logical “1” Output Leakage Current (Note 9)	V+ = +5.0V	0.001	1	μA (max)
$V_{OUT(“0”)}$	Logical “0” Output Voltage	I_{OUT} = +1.2mA and V+≥2.7V; I_{OUT} = +3.2mA and V+≥4.5V; (Note 8)		**0.4**	V (max)
$V_{OUT(“1”)}$	Logical “1” Push-Pull Output Voltage	I_{SOURCE} = 500μA, V+ ≥ 2.7V		**0.8 × V+**	V (min)
		I_{SOURCE} = 800μA, V+≥4.5V		**V+ – 1.5**	V (min)
V_{IH}	HYST Input Logical ”1“ Threshold Voltage			**0.8 × V+**	V (min)
V_{IL}	HYST Input Logical ”0“ Threshold Voltage			**0.2 × V+**	V (max)

Note 1: *Absolute Maximum Ratings* indicate limits beyond which damage to the device may occur. *Operating Ratings* indicate conditions for which the device is functional, but do not guarantee specific performance limits. For guaranteed specifications and test conditions, see the *Electrical Characteristics*. The guaranteed specifications apply only for the test conditions listed. Some performance characteristics may degrade when the device is not operated under the listed test conditions.

Note 2: When the input voltage (V_I) at any pin exceeds the power supply (V_I < GND or V_I > V^+), the current at that pin should be limited to 5mA. The 20mA maximum package input current rating limits the number of pins that can safely exceed the power supplies with an input current of 5mA to four. Under normal operating conditions the maximum current that pins 2, 4 or 5 can handle is limited to 5mA each.

Note 3: The maximum power dissipation must be derated at elevated temperatures and is dictated by T_{JMAX} (maximum junction temperature), θ_{JA} (junction to ambient thermal resistance) and T_A (ambient temperature). The maximum allowable power dissipation at any temperature is $P_D = (T_{JMAX}–T_A) / \theta_{JA}$ or the number given in the *Absolute Maximum Ratings*, whichever is lower. For this device, T_{JMAX} = 150°C. For this device the typical thermal resistance (θ_{JA}) of the different package types when board mounted follow:

Package Type	θ_{JA}
SOT23-5, MA05B	250°C/W

Note 4: The human body model is a 100pF capacitor discharge through a 1.5kΩ resistor into each pin. The machine model is a 200pF capacitor discharged directly into each pin.

Note 5: See the URL "http://www.national.com/packaging/" for other recommendations and methods of soldering surface mount devices.

Note 6: Typicals are at $T_J = T_A$ = 25°C and represent most likely parametric norm.

Note 7: Limits are guaranteed to National's AOQL (Average Outgoing Quality Level).

Note 8: Care should be taken to include the effects of self heating when setting the maximum output load current. The power dissipation of the LM26 would increase by 1.28mW when I_{OUT} = 3.2mA and V_{OUT} = 0.4V. With a thermal resistance of 250°C/W, this power dissipation would cause an increase in the die temperature of about 0.32°C due to self heating. Self heating is not included in the trip point accuracy specification.

Note 9: The 1µA limit is based on a testing limitation and does not reflect the actual performance of the part. Expect to see a doubling of the current for every 15°C increase in temperature. For example, the 1nA typical current at 25°C would increase to 16nA at 85°C.

Part Number Template

The series of digits labeled xyz in the part number LM26CIM-xyz, describe the set point value and the function of the output as follows:

The place holders xy describe the set point temperature as shown in the following table.

x (10x)	y (1x)	Temperature (°C)
A	-	–5
B	-	–4
C	-	–3
D	-	–2
E	-	–1
F	-	–0
H	H	0
J	J	1
K	K	2
L	L	3

x (10x)	y (1x)	Temperature (°C)
N	N	4
P	P	5
R	R	6
S	S	7
T	T	8
V	V	9
X	-	10
Y	-	11
Z	-	12

The value of z describes the assignment/function of the output as shown in the following table:

Active-$\overline{\text{Low}}$/High	$\overline{\text{Open-Drain}}$/ Push-Pull	$\overline{\text{OS}}$/US	Value of z	Digital Output Function
0	0	0	A	Active-Low, Open-Drain, $\overline{\text{OS}}$ output
0	0	1	B	Active-Low, Open-Drain, $\overline{\text{US}}$ output
1	1	0	C	Active-High, Push-Pull, OS output
1	1	1	D	Active-High, Push-Pull, US output

For example:

- the part number LM26CIM5-TPA has T_{OS} = 85°C, and programmed as an active-low open-drain overtemperature shutdown output.
- the part number LM26CIM5-FPD has T_{US} = –5°C, and programmed as an active-high, push-pull undertemperature shutdown output.

Active-high open-drain and active-low push-pull options are available, please contact National Semiconductor for more information.

Functional Description

LM26 OPTIONS

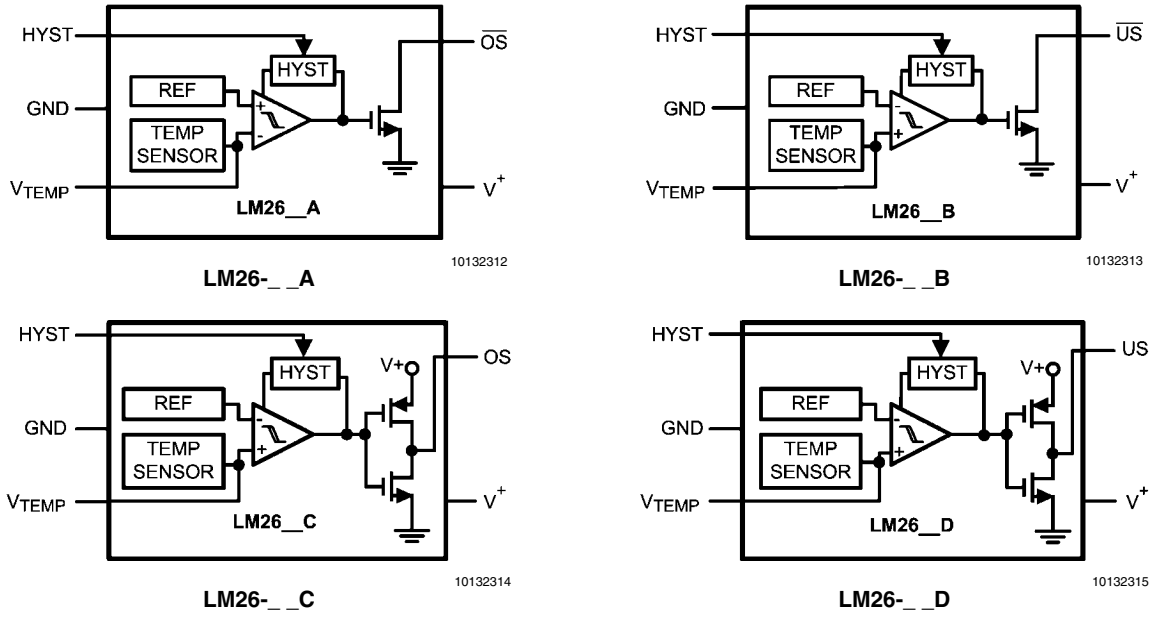

FIGURE 1. Output Pin Options Block Diagrams

The LM26 can be factory programmed to have a trip point anywhere in the range of –55°C to +110°C.

Applications Hints

AFTER-ASSEMBLY PCB TESTING

The LM26's V_{TEMP} output allows after-assembly PCB testing by following a simple test procedure. Simply measuring the V_{TEMP} output voltage will verify that the LM26 has been assembled properly and that its temperature sensing circuitry is functional. The V_{TEMP} output has very weak drive capability that can be overdriven by 1.5mA. Therefore, one can simply force the V_{TEMP} voltage to cause the digital output to change state, thereby verifying that the comparator and output circuitry function after assembly. Here is a sample test procedure that can be used to test the LM26CIM5-TPA which has an 85°C trip point.

1. Turn on V+ and measure V_{TEMP}. Then calculate the temperature reading of the LM26 using the equation:

$$V_O = (-3.479\times10^{-6}\times(T-30)^2) + (-1.082\times10^{-2}\times(T-30)) + 1.8015V \quad (1)$$

or

$$T = -1525.04 + \sqrt{2.4182 \times 10^6 + \frac{1.8015 - V_{TEMP}}{3.479 \times 10^{-6}}} \quad (2)$$

2. Verify that the temperature measured in step one is within (±3°C + error of reference temperature sensor) of the ambient/board temperature. The ambient/board temperature (reference temperature) should be measured using an extremely accurate calibrated temperature sensor.
3.
   A. Observe that $\overline{OS}$ is high.
   B. Drive V_{TEMP} to ground.
   C. Observe that $\overline{OS}$ is now low.
   D. Release the V_{TEMP} pin.
   E. Observe that $\overline{OS}$ is now high.
4.
   A. Observe that $\overline{OS}$ is high.
   B. Drive V_{TEMP} voltage down gradually.
   C. When $\overline{OS}$ goes low, note the V_{TEMP} voltage.
   D. V_{TEMP}Trig = V_{TEMP} at $\overline{OS}$ trigger (HIGH->LOW)
   E. Calculate Ttrig using *Equation 2*.
5.
   A. Gradually raise V_{TEMP} until $\overline{OS}$ goes HIGH. Note V_{TEMP}.
   B. Calculate T_{HYST} using *Equation 2*.

V_{TEMP} LOADING

The V_{TEMP} output has very weak drive capability (1 µA source, 40 µA sink). So care should be taken when attaching circuitry to this pin. Capacitive loading may cause the V_{TEMP} output to oscillate. Simply adding a resistor in series as shown in *Figure 2* will prevent oscillations from occurring. To determine the value of the resistor follow the guidelines given in *Table 1*. The same value resistor will work for either placement of the resistor. If an additional capacitive load is placed directly on the LM26 output, rather than across C_{LOAD}, it should be at least a factor of 10 smaller than C_{LOAD}.

TABLE 1. Resistive compensation for capacitive loading of V_{TEMP}

C_{LOAD}	R (Ω)
≤100pF	0
1nF	8200
10nF	3000
100nF	1000
≥1µF	430

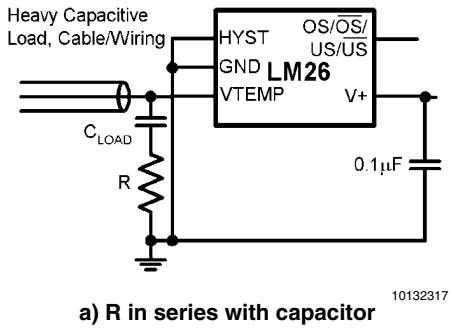

a) R in series with capacitor

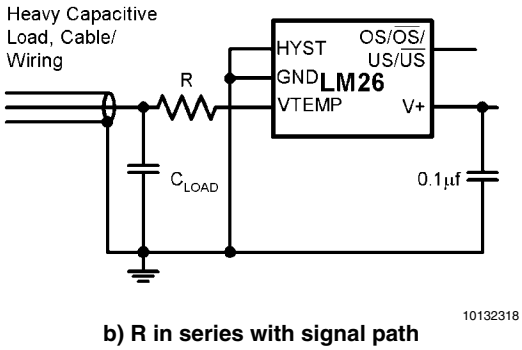

b) R in series with signal path

FIGURE 2. Resistor placement for capacitive loading compensation of V_{TEMP}

NOISE CONSIDERATIONS

The LM26 has excellent power supply noise rejection. Listed below is a variety of signals used to test the LM26 power supply rejection. False triggering of the output was not observed when these signals where coupled into the V+ pin of the LM26.

- square wave 400kHz, 1Vp-p
- square wave 2kHz, 200mVp-p
- sine wave 100Hz to 1MHz, 200mVp-p

Testing was done while maintaining the temperature of the LM26 one degree centigrade way from the trip point with the output not activated.

MOUNTING CONSIDERATIONS

The LM26 can be applied easily in the same way as other integrated-circuit temperature sensors. It can be glued or cemented to a surface. The temperature that the LM26 is sensing will be within about +0.06°C of the surface temperature to which the LM26's leads are attached to.

This presumes that the ambient air temperature is almost the same as the surface temperature; if the air temperature were much higher or lower than the surface temperature, the actual temperature measured would be at an intermediate temperature between the surface temperature and the air temperature.

To ensure good thermal conductivity, the backside of the LM26 die is directly attached to the GND pin (pin 2). The temperatures of the lands and traces to the other leads of the LM26 will also affect the temperature that is being sensed.

Alternatively, the LM26 can be mounted inside a sealed-end metal tube, and can then be dipped into a bath or screwed into a threaded hole in a tank. As with any IC, the LM26 and accompanying wiring and circuits must be kept insulated and dry, to avoid leakage and corrosion. This is especially true if the circuit may operate at cold temperatures where condensation can occur. Printed-circuit coatings and varnishes such as Humiseal and epoxy paints or dips are often used to ensure that moisture cannot corrode the LM26 or its connections.

The junction to ambient thermal resistance (θ_{JA}) is the parameter used to calculate the rise of a part's junction temperature due to its power dissipation. For the LM26 the equation used to calculate the rise in the die junction temperature is as follows:

$$T_J = T_A + \Theta_{JA}(V^+I_Q + (V^+ - V_{TEMP})I_{L_TEMP} + V_{DO}I_{DO}) \quad (3)$$

where T_A is the ambient temperature, V^+ is the power supply voltage, I_Q is the quiescent current, I_{L_TEMP} is the load current on the V_{TEMP} output, V_{DO} is the voltage on the digital output, and I_{DO} is the load current on the digital output. Since the LM26's junction temperature is the actual temperature being measured, care should be taken to minimize the load current that the LM26 is required to drive.

The tables shown in *Figure 3* summarize the thermal resistance for different conditions and the rise in die temperature of the LM26 without any loading on V_{TEMP} and a 10k pull-up resistor on an open-drain digital output with a 5.5V power supply.

	SOT23-5 no heat sink		SOT23-5 small heat sink	
	θ_{JA} (°C/W)	T_J–T_A (°C)	θ_{JA} (°C/W)	T_J–T_A (°C)
Still Air	250	0.11	TBD	TBD
Moving Air	TBD	TBD	TBD	TBD

FIGURE 3. Thermal resistance (θ_{JA}) and temperature rise due to self heating (T_J–T_A)

Typical Applications

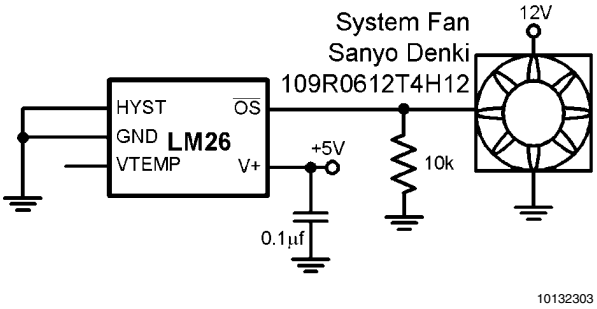

Note: The fan's control pin has internal pull-up. The 10k pull-down sets a slow fan speed. When the output of the LM26 goes low, the fan will speed up.

FIGURE 4. Two Speed Fan Speed Control

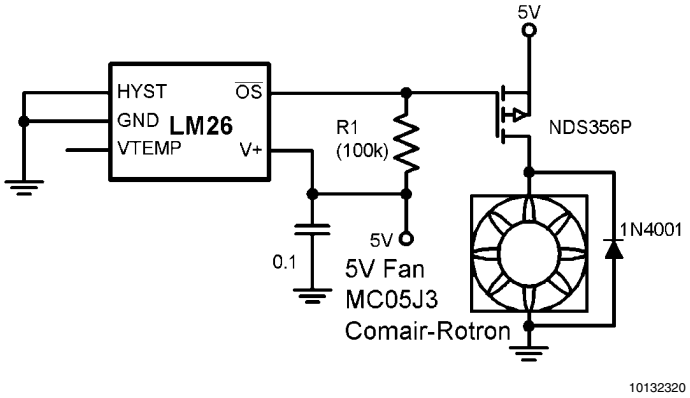

FIGURE 5. Fan High Side Drive

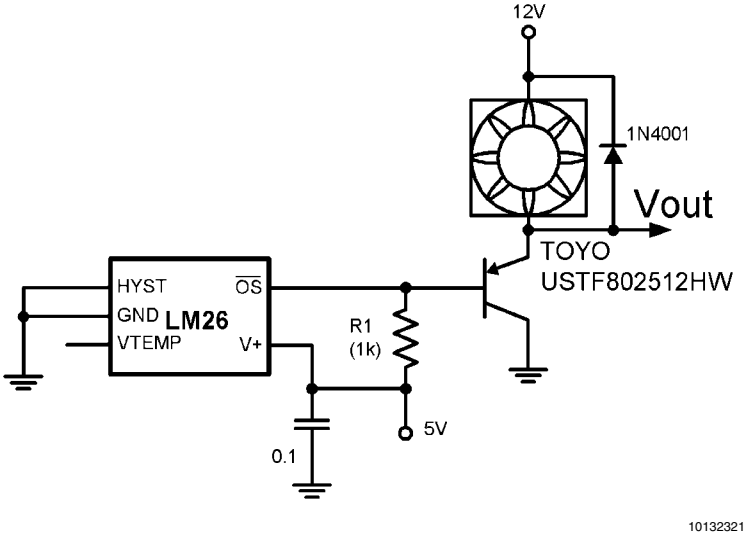

FIGURE 6. Fan Low Side Drive

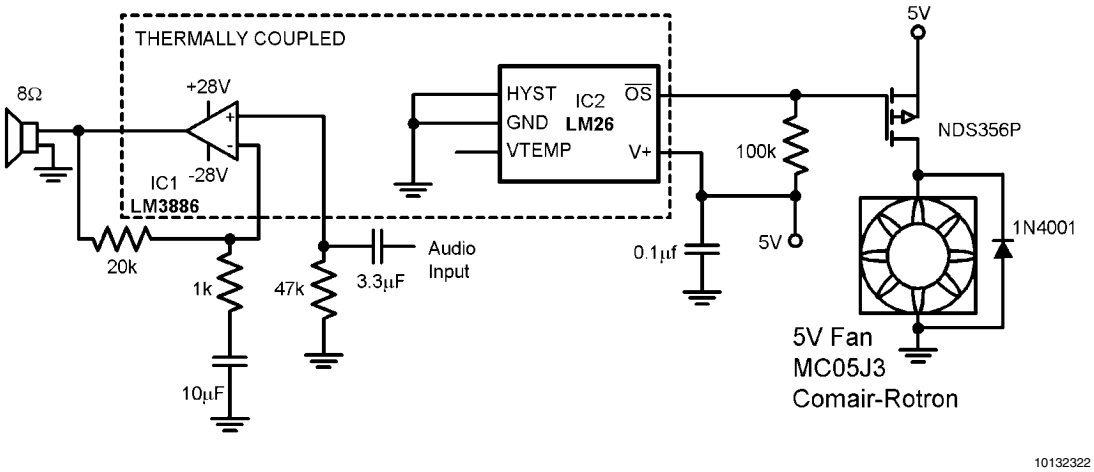

FIGURE 7. Audio Power Amplifier Thermal Protection

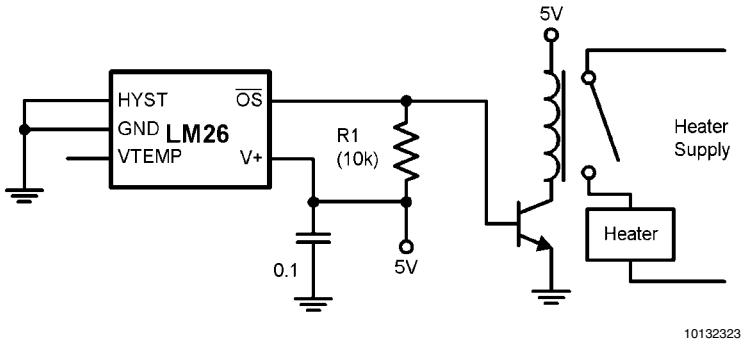

FIGURE 8. Simple Thermostat

Physical Dimensions inches (millimeters) unless otherwise noted

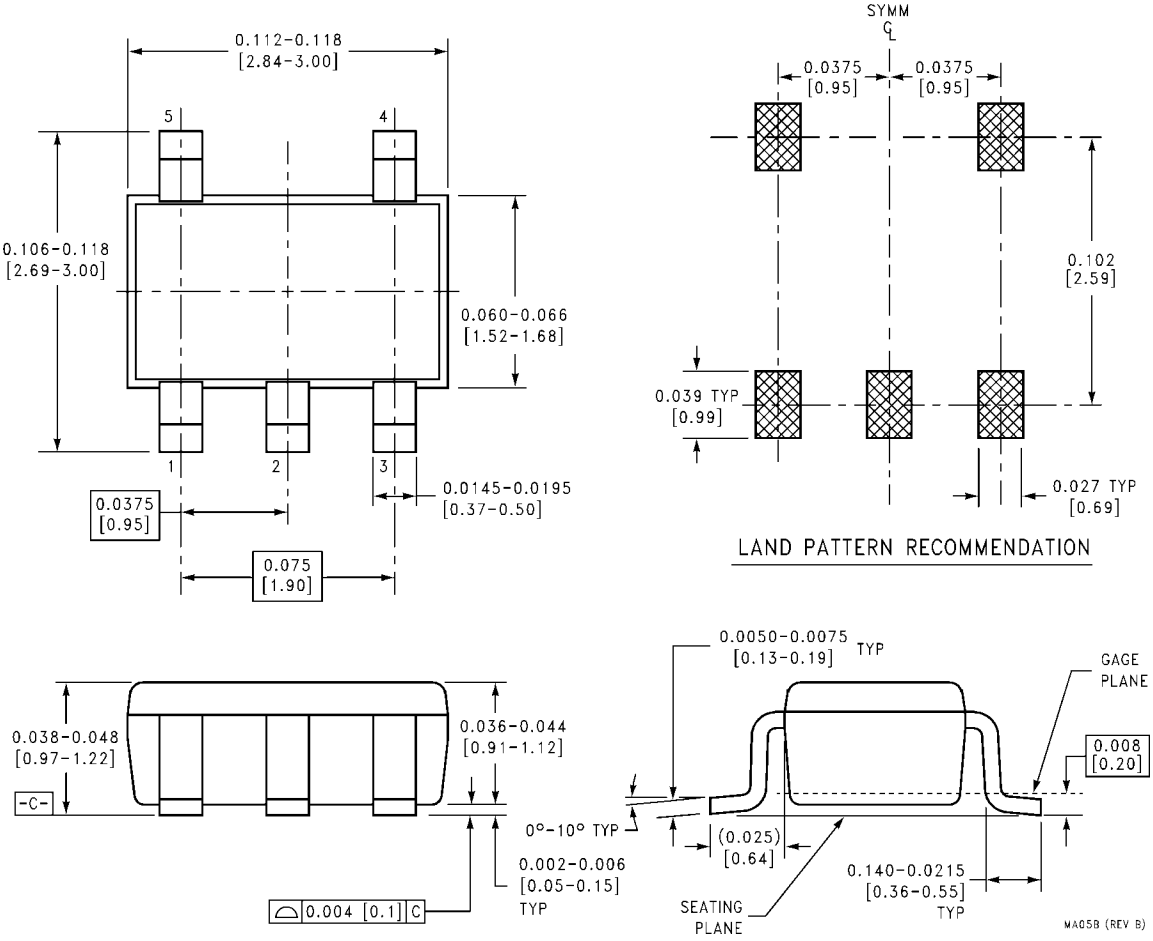

5-Lead Molded SOT-23 Plastic Package, JEDEC
Order Number LM26CIM5 or LM26CIM5X
NS Package Number MA05B

Notes

For more National Semiconductor product information and proven design tools, visit the following Web sites at:
www.national.com

Products		Design Support	
Amplifiers	www.national.com/amplifiers	WEBENCH® Tools	www.national.com/webench
Audio	www.national.com/audio	App Notes	www.national.com/appnotes
Clock and Timing	www.national.com/timing	Reference Designs	www.national.com/refdesigns
Data Converters	www.national.com/adc	Samples	www.national.com/samples
Interface	www.national.com/interface	Eval Boards	www.national.com/evalboards
LVDS	www.national.com/lvds	Packaging	www.national.com/packaging
Power Management	www.national.com/power	Green Compliance	www.national.com/quality/green
Switching Regulators	www.national.com/switchers	Distributors	www.national.com/contacts
LDOs	www.national.com/ldo	Quality and Reliability	www.national.com/quality
LED Lighting	www.national.com/led	Feedback/Support	www.national.com/feedback
Voltage References	www.national.com/vref	Design Made Easy	www.national.com/easy
PowerWise® Solutions	www.national.com/powerwise	Applications & Markets	www.national.com/solutions
Serial Digital Interface (SDI)	www.national.com/sdi	Mil/Aero	www.national.com/milaero
Temperature Sensors	www.national.com/tempsensors	SolarMagic™	www.national.com/solarmagic
PLL/VCO	www.national.com/wireless	PowerWise® Design University	www.national.com/training

THE CONTENTS OF THIS DOCUMENT ARE PROVIDED IN CONNECTION WITH NATIONAL SEMICONDUCTOR CORPORATION ("NATIONAL") PRODUCTS. NATIONAL MAKES NO REPRESENTATIONS OR WARRANTIES WITH RESPECT TO THE ACCURACY OR COMPLETENESS OF THE CONTENTS OF THIS PUBLICATION AND RESERVES THE RIGHT TO MAKE CHANGES TO SPECIFICATIONS AND PRODUCT DESCRIPTIONS AT ANY TIME WITHOUT NOTICE. NO LICENSE, WHETHER EXPRESS, IMPLIED, ARISING BY ESTOPPEL OR OTHERWISE, TO ANY INTELLECTUAL PROPERTY RIGHTS IS GRANTED BY THIS DOCUMENT.

TESTING AND OTHER QUALITY CONTROLS ARE USED TO THE EXTENT NATIONAL DEEMS NECESSARY TO SUPPORT NATIONAL'S PRODUCT WARRANTY. EXCEPT WHERE MANDATED BY GOVERNMENT REQUIREMENTS, TESTING OF ALL PARAMETERS OF EACH PRODUCT IS NOT NECESSARILY PERFORMED. NATIONAL ASSUMES NO LIABILITY FOR APPLICATIONS ASSISTANCE OR BUYER PRODUCT DESIGN. BUYERS ARE RESPONSIBLE FOR THEIR PRODUCTS AND APPLICATIONS USING NATIONAL COMPONENTS. PRIOR TO USING OR DISTRIBUTING ANY PRODUCTS THAT INCLUDE NATIONAL COMPONENTS, BUYERS SHOULD PROVIDE ADEQUATE DESIGN, TESTING AND OPERATING SAFEGUARDS.

EXCEPT AS PROVIDED IN NATIONAL'S TERMS AND CONDITIONS OF SALE FOR SUCH PRODUCTS, NATIONAL ASSUMES NO LIABILITY WHATSOEVER, AND NATIONAL DISCLAIMS ANY EXPRESS OR IMPLIED WARRANTY RELATING TO THE SALE AND/OR USE OF NATIONAL PRODUCTS INCLUDING LIABILITY OR WARRANTIES RELATING TO FITNESS FOR A PARTICULAR PURPOSE, MERCHANTABILITY, OR INFRINGEMENT OF ANY PATENT, COPYRIGHT OR OTHER INTELLECTUAL PROPERTY RIGHT.

LIFE SUPPORT POLICY

NATIONAL'S PRODUCTS ARE NOT AUTHORIZED FOR USE AS CRITICAL COMPONENTS IN LIFE SUPPORT DEVICES OR SYSTEMS WITHOUT THE EXPRESS PRIOR WRITTEN APPROVAL OF THE CHIEF EXECUTIVE OFFICER AND GENERAL COUNSEL OF NATIONAL SEMICONDUCTOR CORPORATION. As used herein:

Life support devices or systems are devices which (a) are intended for surgical implant into the body, or (b) support or sustain life and whose failure to perform when properly used in accordance with instructions for use provided in the labeling can be reasonably expected to result in a significant injury to the user. A critical component is any component in a life support device or system whose failure to perform can be reasonably expected to cause the failure of the life support device or system or to affect its safety or effectiveness.

National Semiconductor and the National Semiconductor logo are registered trademarks of National Semiconductor Corporation. All other brand or product names may be trademarks or registered trademarks of their respective holders.

Copyright© 2011 National Semiconductor Corporation

For the most current product information visit us at www.national.com

National Semiconductor Americas Technical Support Center
Email: support@nsc.com
Tel: 1-800-272-9959

National Semiconductor Europe Technical Support Center
Email: europe.support@nsc.com

National Semiconductor Asia Pacific Technical Support Center
Email: ap.support@nsc.com

National Semiconductor Japan Technical Support Center
Email: jpn.feedback@nsc.com

IMPORTANT NOTICE

Texas Instruments Incorporated and its subsidiaries (TI) reserve the right to make corrections, modifications, enhancements, improvements, and other changes to its products and services at any time and to discontinue any product or service without notice. Customers should obtain the latest relevant information before placing orders and should verify that such information is current and complete. All products are sold subject to TI's terms and conditions of sale supplied at the time of order acknowledgment.

TI warrants performance of its hardware products to the specifications applicable at the time of sale in accordance with TI's standard warranty. Testing and other quality control techniques are used to the extent TI deems necessary to support this warranty. Except where mandated by government requirements, testing of all parameters of each product is not necessarily performed.

TI assumes no liability for applications assistance or customer product design. Customers are responsible for their products and applications using TI components. To minimize the risks associated with customer products and applications, customers should provide adequate design and operating safeguards.

TI does not warrant or represent that any license, either express or implied, is granted under any TI patent right, copyright, mask work right, or other TI intellectual property right relating to any combination, machine, or process in which TI products or services are used. Information published by TI regarding third-party products or services does not constitute a license from TI to use such products or services or a warranty or endorsement thereof. Use of such information may require a license from a third party under the patents or other intellectual property of the third party, or a license from TI under the patents or other intellectual property of TI.

Reproduction of TI information in TI data books or data sheets is permissible only if reproduction is without alteration and is accompanied by all associated warranties, conditions, limitations, and notices. Reproduction of this information with alteration is an unfair and deceptive business practice. TI is not responsible or liable for such altered documentation. Information of third parties may be subject to additional restrictions.

Resale of TI products or services with statements different from or beyond the parameters stated by TI for that product or service voids all express and any implied warranties for the associated TI product or service and is an unfair and deceptive business practice. TI is not responsible or liable for any such statements.

TI products are not authorized for use in safety-critical applications (such as life support) where a failure of the TI product would reasonably be expected to cause severe personal injury or death, unless officers of the parties have executed an agreement specifically governing such use. Buyers represent that they have all necessary expertise in the safety and regulatory ramifications of their applications, and acknowledge and agree that they are solely responsible for all legal, regulatory and safety-related requirements concerning their products and any use of TI products in such safety-critical applications, notwithstanding any applications-related information or support that may be provided by TI. Further, Buyers must fully indemnify TI and its representatives against any damages arising out of the use of TI products in such safety-critical applications.

TI products are neither designed nor intended for use in military/aerospace applications or environments unless the TI products are specifically designated by TI as military-grade or "enhanced plastic." Only products designated by TI as military-grade meet military specifications. Buyers acknowledge and agree that any such use of TI products which TI has not designated as military-grade is solely at the Buyer's risk, and that they are solely responsible for compliance with all legal and regulatory requirements in connection with such use.

TI products are neither designed nor intended for use in automotive applications or environments unless the specific TI products are designated by TI as compliant with ISO/TS 16949 requirements. Buyers acknowledge and agree that, if they use any non-designated products in automotive applications, TI will not be responsible for any failure to meet such requirements.

Following are URLs where you can obtain information on other Texas Instruments products and application solutions:

Products		**Applications**	
Audio	www.ti.com/audio	Communications and Telecom	www.ti.com/communications
Amplifiers	amplifier.ti.com	Computers and Peripherals	www.ti.com/computers
Data Converters	dataconverter.ti.com	Consumer Electronics	www.ti.com/consumer-apps
DLP® Products	www.dlp.com	Energy and Lighting	www.ti.com/energy
DSP	dsp.ti.com	Industrial	www.ti.com/industrial
Clocks and Timers	www.ti.com/clocks	Medical	www.ti.com/medical
Interface	interface.ti.com	Security	www.ti.com/security
Logic	logic.ti.com	Space, Avionics and Defense	www.ti.com/space-avionics-defense
Power Mgmt	power.ti.com	Transportation and Automotive	www.ti.com/automotive
Microcontrollers	microcontroller.ti.com	Video and Imaging	www.ti.com/video
RFID	www.ti-rfid.com		
OMAP Mobile Processors	www.ti.com/omap		
Wireless Connectivity	www.ti.com/wirelessconnectivity		

TI E2E Community Home Page e2e.ti.com

Mailing Address: Texas Instruments, Post Office Box 655303, Dallas, Texas 75265
Copyright © 2011, Texas Instruments Incorporated

OCEAN CHIPS
Океан Электроники
Поставка электронных компонентов

Компания «Океан Электроники» предлагает заключение долгосрочных отношений при поставках импортных электронных компонентов на взаимовыгодных условиях!

Наши преимущества:

- Поставка оригинальных импортных электронных компонентов напрямую с производств Америки, Европы и Азии, а так же с крупнейших складов мира;
- Широкая линейка поставок активных и пассивных импортных электронных компонентов (более 30 млн. наименований);
- Поставка сложных, дефицитных, либо снятых с производства позиций;
- Оперативные сроки поставки под заказ (от 5 рабочих дней);
- Экспресс доставка в любую точку России;
- Помощь Конструкторского Отдела и консультации квалифицированных инженеров;
- Техническая поддержка проекта, помощь в подборе аналогов, поставка прототипов;
- Поставка электронных компонентов под контролем ВП;
- Система менеджмента качества сертифицирована по Международному стандарту ISO 9001;
- При необходимости вся продукция военного и аэрокосмического назначения проходит испытания и сертификацию в лаборатории (по согласованию с заказчиком);
- Поставка специализированных компонентов военного и аэрокосмического уровня качества (Xilinx, Altera, Analog Devices, Intersil, Interpoint, Microsemi, Actel, Aeroflex, Peregrine, VPT, Syfer, Eurofarad, Texas Instruments, MS Kennedy, Miteq, Cobham, E2V, MA-COM, Hittite, Mini-Circuits, General Dynamics и др.);

Компания «Океан Электроники» является официальным дистрибьютором и эксклюзивным представителем в России одного из крупнейших производителей разъемов военного и аэрокосмического назначения **«JONHON»**, а так же официальным дистрибьютором и эксклюзивным представителем в России производителя высокотехнологичных и надежных решений для передачи СВЧ сигналов **«FORSTAR»**.

AVIC JONHON

«JONHON» (основан в 1970 г.)

Разъемы специального, военного и аэрокосмического назначения:

(Применяются в военной, авиационной, аэрокосмической, морской, железнодорожной, горно- и нефтедобывающей отраслях промышленности)

«FORSTAR» (основан в 1998 г.)

ВЧ соединители, коаксиальные кабели, кабельные сборки и микроволновые компоненты:

(Применяются в телекоммуникациях гражданского и специального назначения, в средствах связи, РЛС, а так же военной, авиационной и аэрокосмической отраслях промышленности).

FORSTAR®

Телефон: 8 (812) 309-75-97 (многоканальный)
Факс: 8 (812) 320-03-32
Электронная почта: ocean@oceanchips.ru
Web: http://oceanchips.ru/
Адрес: 198099, г. Санкт-Петербург, ул. Калинина, д. 2, корп. 4, лит. А