19-3726; Rev 0; 5/05

MAX1479 Evaluation Kit

Evaluates: MAX1479

General Description

The MAX1479 evaluation kit (EV kit) allows for a detailed evaluation of the MAX1479 ASK/FSK transmitter. It enables testing of the device's RF performance and requires no additional support circuitry. The RF output uses a 50Ω matching network and an SMA connector for convenient connection to test equipment. A reverse polarity SMA is also included to connect to a 1/4 wave whip antenna. The EV kit can also directly interface to the user's embedded design for easy data encoding.

The MAX1479EV kit comes in two versions: a 315MHz version and a 433.92MHz version. The passive components are optimized for these frequencies. These components can easily be changed to work at RF frequencies from 300MHz to 450MHz.

For easy implementation into the customer's design, the MAX1479EV kit also features a proven PC board layout, which can be easily duplicated for quicker time-to-market. The EV kit Gerber files are available for download at www.maxim-ic.com.

Features

- **Proven PC Board Layout**
- **Proven Components Parts List**
- **Multiple Test Points Provided on Board**
- **Available in 315MHz or 433.92MHz Optimized Versions**
- **Adjustable Frequency Range from 300MHz to 450MHz***
- **Fully Assembled and Tested**
- **Can Operate as a Stand-Alone Transmitter with Included Battery**

**Requires component changes.*

Ordering Information

PART	TEMP RANGE	IC PACKAGE
MAX1479EVKIT-315	-40°C to +85°C	16 Thin QFN
MAX1479EVKIT-433	-40°C to +85°C	16 Thin QFN

Component List

DESIGNATION	QTY	DESCRIPTION
C1, C6 (315MHz)	2	15pF ±5%, 50V ceramic capacitors (0603) Murata GRM1885C1H150J
C1, C6 (433MHz)	2	6.8pF ±0.5pF, 50V ceramic capacitors (0603) C0G Murata GRM1885C1H6R8D
C2 (315MHz)	1	22pF ±5%, 50V ceramic capacitor (0603) C0G Murata GRM1885C1H220J
C2 (433MHz)	1	10pF ±5%, 50V ceramic capacitor (0603) C0G Murata GRM1885C1H100J
C3, C10	2	0.01µF ±10%, 50V ceramic capacitors (0603) Murata GRM188R71H103KA01
C4	1	680pF ±5%, 50V ceramic capacitor (0603) C0G Murata GRM1885C1H681J
C5, C16, C18, C19	0	Not installed

DESIGNATION	QTY	DESCRIPTION
C7, C9	2	0.47µF +80/-20%, 16V ceramic capacitors (0603) Y5V Murata GRM188F51C474Z
C8, C11, C12	3	220pF ±5%, 50V ceramic capacitors (0603) Murata GRM1885C1H221J
C13 (315MHz)	1	2.2pF ±0.5pF, 50V ceramic capacitor (0603) C0G Murata GRM1885C1H2R2D
C13 (433MHz)	1	1.0pF ±0.5pF, 50V ceramic capacitor (0603) C0G Murata GRM1885C1H1R0D
C14, C15	2	100pF ±5%, 50V ceramic capacitors (0603) Murata GRM1885C1H101J
JU1–JU10	10	3-pin headers Digi-Key S1012-36-ND or equivalent
L1 (315MHz)	1	27nH ±5% inductor (0603) Coilcraft 0603CS-27NXJB
L1 (433MHz)	1	22nH ±5% inductor (0603) Coilcraft 0603CS-22NXJB

For pricing, delivery, and ordering information, please contact Maxim/Dallas Direct! at 1-888-629-4642, or visit Maxim's website at www.maxim-ic.com.

Component List (continued)

DESIGNATION	QTY	DESCRIPTION
L2 (315MHz)	1	22nH ±5% inductor (0603) Coilcraft 0603CS-22NXJB
L2 (433MHz)	1	18nH ±5% inductor (0603) Coilcraft 0603CS-18NXJB
R1	1	5kΩ potentiometer BC Components SM4W502
R2	0	0Ω resistor (0603), any, not installed
R3	1	5.1Ω ±5% resistor (0603), any
R4	1	0Ω resistor (0603), any
Antenna (315MHz)	0	315MHz 1/4-wave whip antenna, not provided Lynx ANT-315-CW-RH
Antenna (433MHz)	1	433MHz 1/4-wave whip antenna, not provided Lynx ANT-433-CW-RH
ANTENNA_OUT	1	RP-SMA connector Linx CONREVSMA001
BAT1	1	Battery holder MPD BA2032
Battery	1	Coin-cell battery Panasonic BR2032

DESIGNATION	QTY	DESCRIPTION
REF_IN	1	SMA connector top mount, not installed Digi-Key J500-ND Johnson 142-0701-201
RF_OUT	1	SMA connector top mount Digi-Key J500-ND Johnson 142-0701-201
U1	1	MAX1479ATE
VDD, VSS, ENABLE, DATA_IN, CKOUT	5	Test points Mouser 151-203 or equivalent
Y1 (315MHz)	1	Crystal 9.84375MHz Hong Kong Crystal SSL9843750E03FAFZ800 or Crystek 017000
Y1 (433MHz)	1	Crystal 13.56MHz Hong Kong Crystal SSM1356000E03FAFZ800 or Crystek 017001
—	10	Shunt (JU1) Digi-Key S9000-ND or equivalent
—	1	MAX1479 EV kit PC board

Component Suppliers

SUPPLIER	PHONE	FAX
Coilcraft	800-322-2645	847-639-1469
Crystek	800-237-3061	941-561-1025
Hong Kong Crystal	852-2412-0121	852-2498-5908
Murata	800-831-9172	814-238-0490

Note: *Indicate you are using the MAX1479 when contacting these manufacturers.*

Quick Start

The following procedure allows for proper device evaluation.

Required Test Equipment

- Regulated power supply capable of providing +3.0V
- Spectrum analyzer such as the Agilent 8562E
- Optional ammeter for measuring supply current
- Power meter such as the Agilent EPM-441A

Connections and Setup

This section provides a step-by-step guide to operating the EV kit and testing the device's functionality. Do not turn on the DC power until all connections are made:

1) Connect a DC supply set to +3.0V, through an ammeter, to the VDD and VSS terminals on the EV kit. Do not turn on the supply.
2) Connect the RF_OUT SMA connector to the spectrum analyzer. Set the analyzer to a center frequency of 315MHz (or 433.92MHz) and a span of 1MHz.
3) Turn on the DC supply. The spectrum analyzer should display a peak of about +10dBm at 315MHz (or 433.92MHz).
4) Disconnect the spectrum analyzer and connect the power meter instead. Measure the output power and also the current draw.
5) Calculate the efficiency. This is done using the following equation:

   $$\text{Efficiency} = 10\hat{}(P_{OUT}/10)/(V \times I)$$

   For example, for a +10.8dBm output, and a 10.9mA (at 3.0V) current, the efficiency is 37%.

Layout Issues

A properly designed PC board is an essential part of any RF/microwave circuit. On high-frequency inputs and outputs, use controlled-impedance lines and keep them as short as possible to minimize losses and radiation. At high frequencies, trace lengths that are on the order of λ/10 or longer can act as antennas.

Keeping the traces short also reduces parasitic inductance. Generally, 1in of a PC board trace adds about 20nH of parasitic inductance. The parasitic inductance can have a dramatic effect on the effective inductance. For example, a 0.5in trace connecting a 100nH inductor adds an extra 10nH of inductance or 10%.

To reduce the parasitic inductance, use wider traces and a solid ground or power plane below the signal traces. Also, use low-inductance connections to ground on all GND pins, and place decoupling capacitors close to all VDD connections.

The EV kit PC board can serve as a reference design for laying out a board using the MAX1479.

Detailed Description

Power-Down Control

The MAX1479 can be controlled externally using the ENABLE connector. The IC draws approximately 0.2nA (at room temperature) in shutdown mode. Jumper JU1 is used to control this mode. The shunt can be placed between pins 1 and 2 to enable the device. Remove the JU1 shunt for external control. See Table 1 for jumper function descriptions.

Table 1. JU1 Through JU4 Jumpers Function

JUMPER	STATE	FUNCTION
JU1	1-2	RF carrier transmit enable
	2-3	Power-down mode
	N.C.	External power-down control
JU2	1-2	RF carrier transmit mode (ASK), FSK high frequency (FSK)
	2-3	PA off, PLL ON (ASK), FSK low frequency (FSK)
	N.C.	External data transmit
JU3	1-2	External supply operation
	2-3	Battery operation
JU4	1-2	FSK mode
	2-3	ASK mode

Data Input

The MAX1479 EV kit transmits ASK and FSK data with data rates of up to 100kbps (ASK) or 20kbps (FSK). JU2 controls whether the MAX1479 transmits the ASK carrier frequency (or the FSK high frequency), turns off the PA (or transmits the FSK low frequency), or transmits an external data stream. See Table 1.

REF_IN External Frequency Input

For applications where the correct frequency crystal is not available, it is possible to directly inject an external frequency through the REF_IN SMA (not provided). Connect the SMA to a low-phase-noise generator. The addition of C18 and C19 is necessary (use 0.01µF capacitors).

Battery Operation

The MAX1479 EV kit can be powered by an external power supply or by the supplied 3V coin-cell battery. Set jumper JU3 to connect pins 2 and 3 for battery operation.

RF Output

The MAX1479 EV kit includes two SMA connectors for RF output. RF_OUT is a standard SMA and is used to connect the PA output to test equipment. Output is matched to 50Ω. ANTENNA_OUT is a reverse polarity SMA and is used to connect to the 1/4-wave whip antenna (not supplied). Note that resistor R2 (0Ω) needs to be added.

Modulation Mode Input

Jumper JU4 sets the mode of transmission. Set jumper JU4 to connect pins 1 and 2 for FSK mode, 2 and 3 for ASK mode.

FSK Frequency Deviation

The FSK deviation is set by jumpers JU5 through JU7. The maximum deviation depends on the PC board parasitics. The EV kit max is around 50kHz (315MHz). If very large FSK frequency deviations are desired, use a crystal with a larger motional capacitance and/or reduce PC board parasitic capacitances. One way to reduce parasitic capacitances on the EV kit is to remove C14, C15, and C16 and move the crystal closer to the IC.

Table 2. Clock-Divider Settings

JUMPER	SETTING	JUMPER	SETTING	JUMPER	SETTING	FUNCTION
JU5	1-2	JU6	1-2	JU7	1-2	Max deviation
	1-2		1-2		2-3	7/8 x max deviation
	1-2		2-3		1-2	3/4 x max deviation
	1-2		2-3		2-3	5/8 x max deviation
	2-3		1-2		1-2	1/2 x max deviation
	2-3		1-2		2-3	3/8 x max deviation
	2-3		2-3		1-2	1/4 x max deviation
	2-3		2-3		2-3	1/8 x max deviation

Clock Output

Jumpers JU8 and JU9 set the divider ratio for the clock output. See Table 3 for the settings.

Table 3. Clock Divider Settings

JUMPER	SETTING	JUMPER	SETTING	FUNCTION
JU8	1-2	JU9	1-2	f_{XTAL} /16
	1-2		2-3	f_{XTAL} /8
	2-3		1-2	f_{XTAL} /4
	2-3		2-3	Logic 0 output

Envelope Shaping

Jumper JU10 sets envelope shaping for a more gentle turn-on/turn-off of the PA in ASK mode. Set jumper JU10 to connect pins 2 and 3 to allow for envelope shaping. See Table 4 for settings.

Table 4. JU10 Jumper Function

JUMPER	STATE	FUNCTION
JU10	1-2	No envelope shaping
	2-3	Envelope shaping

I/O Connections

Table 5 is a list of all I/O connections.

Table 5. I/O Connectors

SIGNAL	DESCRIPTION
RF_OUT	RF output
REF_IN	External reference frequency input
ANTENNA_OUT	Reverse polarity SMA for 1/4-wave antenna
VSS	Ground
VDD	Power-supply input
DATA_IN	Data input
ENABLE	Power-down control
CLKOUT	Buffered clock output

For additional information and a list of application notes, consult the www.maxim-ic.com website.

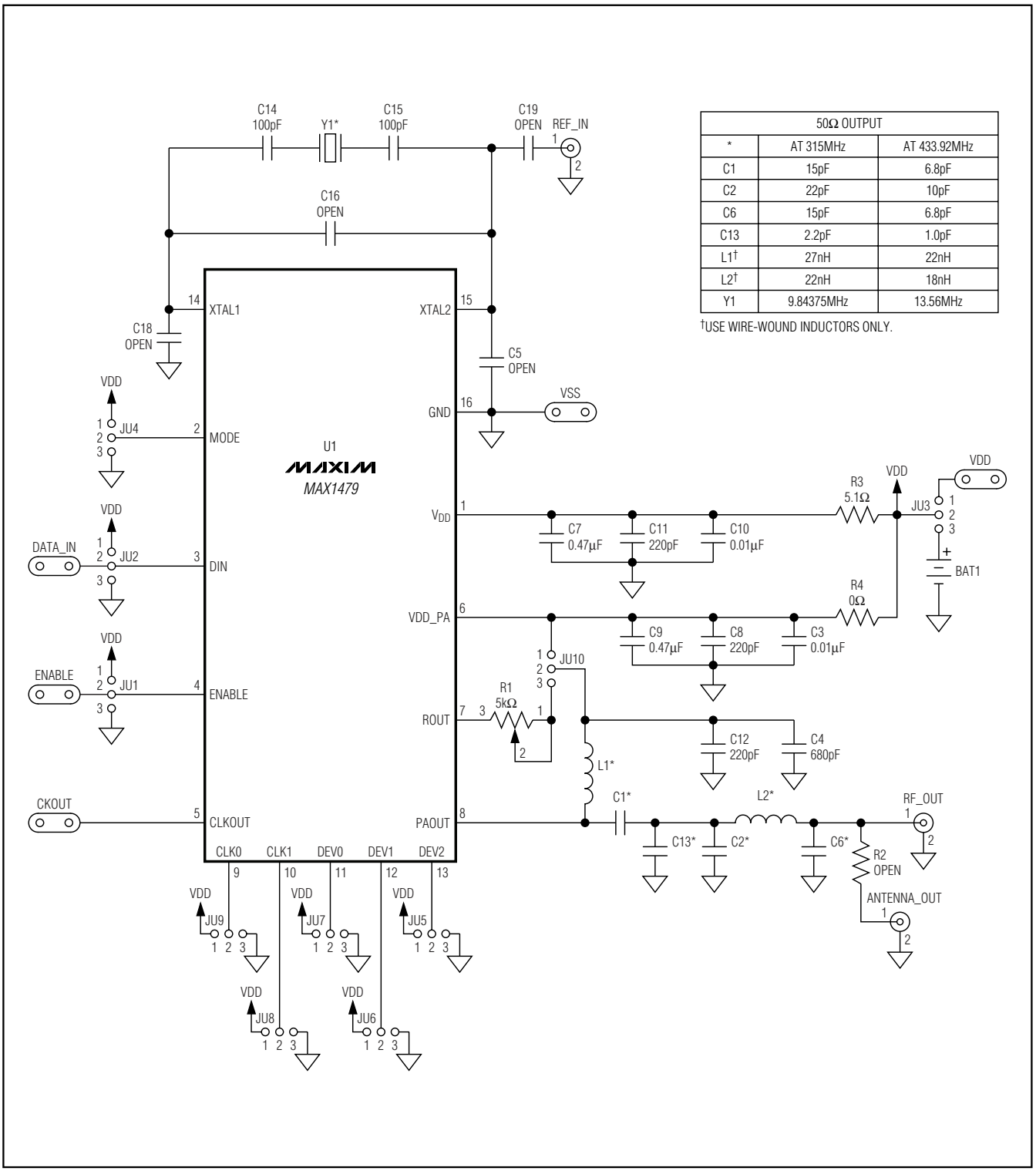

50Ω OUTPUT		
*	AT 315MHz	AT 433.92MHz
C1	15pF	6.8pF
C2	22pF	10pF
C6	15pF	6.8pF
C13	2.2pF	1.0pF
L1†	27nH	22nH
L2†	22nH	18nH
Y1	9.84375MHz	13.56MHz

†USE WIRE-WOUND INDUCTORS ONLY.

Figure 1. MAX1479 EV Kit Schematic

MAX1479 Evaluation Kit

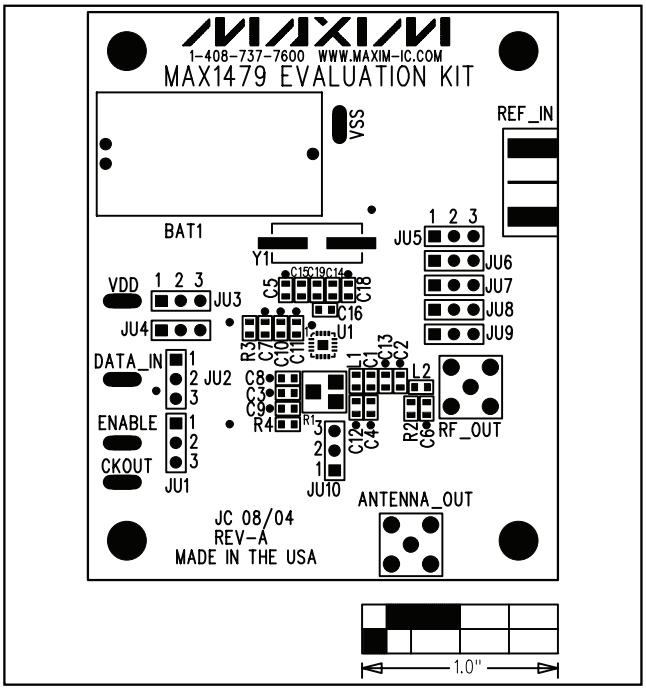

Figure 2. MAX1479 EV Kit Component Placement Guide—Component Side

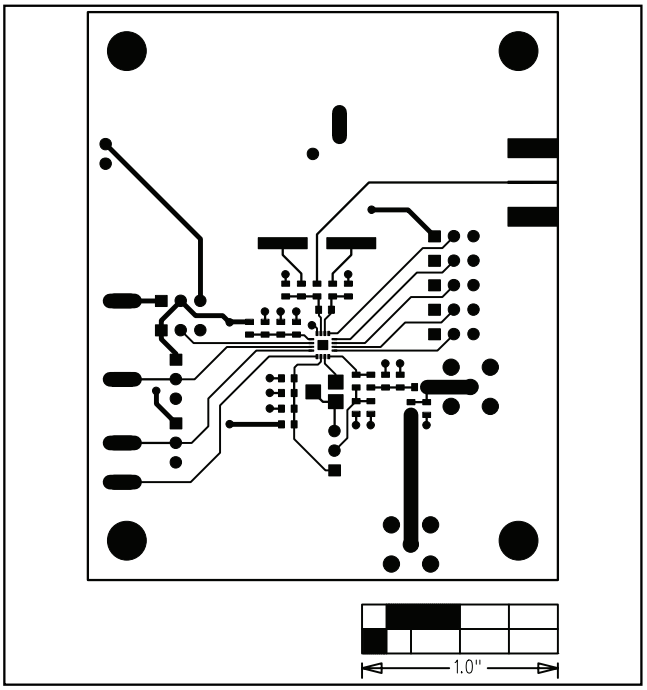

Figure 3. MAX1479 EV Kit PC Board Layout—Component Side

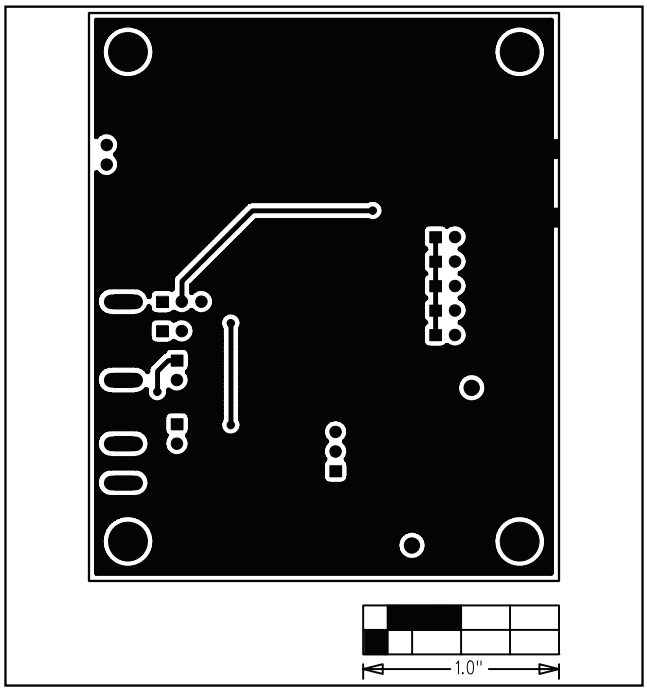

Figure 4. MAX1479 EV Kit PC Board Layout—Solder Side

Maxim cannot assume responsibility for use of any circuitry other than circuitry entirely embodied in a Maxim product. No circuit patent licenses are implied. Maxim reserves the right to change the circuitry and specifications without notice at any time.

© 2005 Maxim Integrated Products Printed USA MAXIM is a registered trademark of Maxim Integrated Products, Inc.

OCEAN CHIPS
Океан Электроники
Поставка электронных компонентов

Компания «Океан Электроники» предлагает заключение долгосрочных отношений при поставках импортных электронных компонентов на взаимовыгодных условиях!

Наши преимущества:

- Поставка оригинальных импортных электронных компонентов напрямую с производств Америки, Европы и Азии, а так же с крупнейших складов мира;
- Широкая линейка поставок активных и пассивных импортных электронных компонентов (более 30 млн. наименований);
- Поставка сложных, дефицитных, либо снятых с производства позиций;
- Оперативные сроки поставки под заказ (от 5 рабочих дней);
- Экспресс доставка в любую точку России;
- Помощь Конструкторского Отдела и консультации квалифицированных инженеров;
- Техническая поддержка проекта, помощь в подборе аналогов, поставка прототипов;
- Поставка электронных компонентов под контролем ВП;
- Система менеджмента качества сертифицирована по Международному стандарту ISO 9001;
- При необходимости вся продукция военного и аэрокосмического назначения проходит испытания и сертификацию в лаборатории (по согласованию с заказчиком);
- Поставка специализированных компонентов военного и аэрокосмического уровня качества (Xilinx, Altera, Analog Devices, Intersil, Interpoint, Microsemi, Actel, Aeroflex, Peregrine, VPT, Syfer, Eurofarad, Texas Instruments, MS Kennedy, Miteq, Cobham, E2V, MA-COM, Hittite, Mini-Circuits, General Dynamics и др.);

Компания «Океан Электроники» является официальным дистрибьютором и эксклюзивным представителем в России одного из крупнейших производителей разъемов военного и аэрокосмического назначения **«JONHON»**, а так же официальным дистрибьютором и эксклюзивным представителем в России производителя высокотехнологичных и надежных решений для передачи СВЧ сигналов **«FORSTAR»**.

AVIC JONHON

«JONHON» (основан в 1970 г.)

Разъемы специального, военного и аэрокосмического назначения:

(Применяются в военной, авиационной, аэрокосмической, морской, железнодорожной, горно- и нефтедобывающей отраслях промышленности)

«FORSTAR» (основан в 1998 г.)

ВЧ соединители, коаксиальные кабели, кабельные сборки и микроволновые компоненты:

(Применяются в телекоммуникациях гражданского и специального назначения, в средствах связи, РЛС, а так же военной, авиационной и аэрокосмической отраслях промышленности).

FORSTAR®

Телефон: 8 (812) 309-75-97 (многоканальный)
Факс: 8 (812) 320-03-32
Электронная почта: ocean@oceanchips.ru
Web: http://oceanchips.ru/
Адрес: 198099, г. Санкт-Петербург, ул. Калинина, д. 2, корп. 4, лит. А