PRELIMINARY

CY2DP818-2

1:8 Clock Fanout Buffer

Features

- Low voltage operation V_{DD} = 3.3V
- 1:8 fanout
- Single-input configurable for LVDS, LVPECL, or LVTTL
- 8 pairs of LVPECL outputs with enable and disable
- Drives a 50 ohm load
- Low input capacitance
- Low output skew
- Low propagation delay typical (tpd < 4 ns)
- Industrial versions available
- Package available include: TSSOP
- Does not exceed Bellcore 802.3 standards
- Operation up to 350 MHz and 700 Mbps

Description

This Cypress series of network circuits is produced using advanced 0.35 micron CMOS technology, achieving the industry's fastest logic.

The Cypress CY2DP818-2 fanout buffer features a single LVDS or a single-ended LVTTL compatible input and eight LVPECL output pairs.

Designed for data communications clock management applications, the large fanout from a single input reduces loading on the input clock.

The CY2DP818-2 is ideal for both level translations from single-ended to LVPECL and for the distribution of LVPECL based clock signals.

The Cypress CY2DP818-2 has configurable input functions. The input is user configurable through the Inconfig pin for single ended or differential input.

Logic Block Diagram

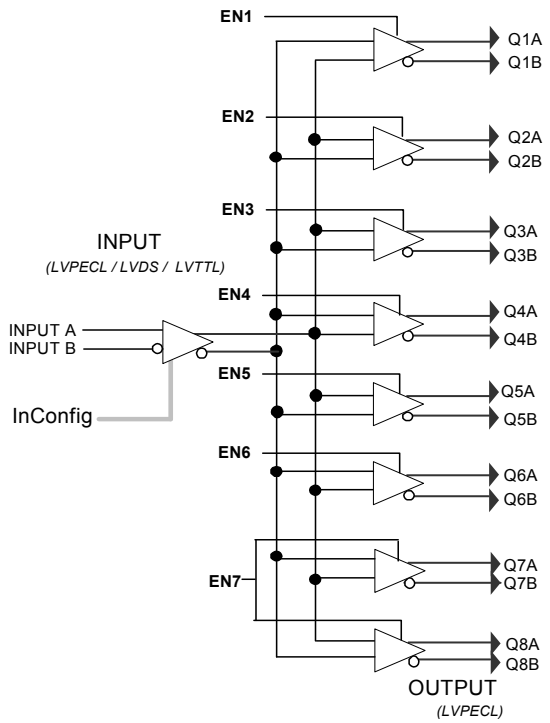

[+] Feedback

Pin Configuration

Figure 1. Pin Diagram - 38-Pin TSSOP

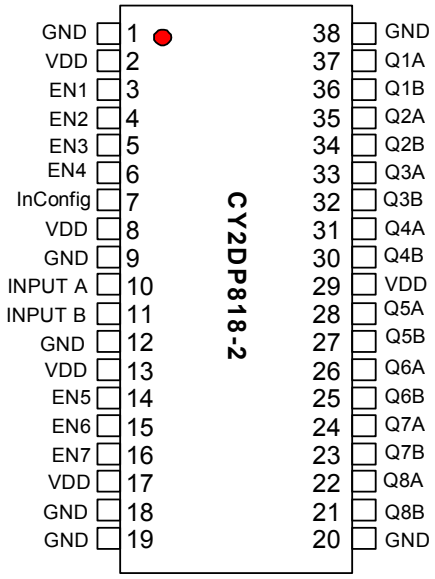

Pin Description

Pin Number	Pin Name	Pin Standard Interface	Description
1, 9,12,18,19,20,38	GND	POWER	**Ground.**
2,8,13,29,17	VDD	POWER	**Power supply.**
3,4,5,6,14,15,16	EN(1:7)	LVTTL/LVCMOS	**The respective outputs are enabled when these pins are pulled high**. Outputs are disabled when connected to GND. EN7 controls both Q7(A,B) and Q8(A,B)
10,11	Input A, Input B	Default: LVPECL/LDVS Optional: LVTTL/LVCMOS single pin	**Differential input pair or single line**. LVPECL/LVDS default. See InConfig, below.
37, 36,35,34, 33,32,31, 30, 28,27,26,25, 24,23,22,21	Q1(A,B), Q2(A,B) Q3(A,B), Q4(A,B) Q5(A,B), Q6(A,B) Q7(A,B), Q8(A,B)	LVPECL	**Differential outputs.**
7	InConfig	LVTTL/LVCMOS	**Converts inputs from the default LVPECL/LVDS (logic = 0) to LVTTL/LVCMOS (logic = 1)** See Input Receiver Configuration for Differential or LVTTL/LVCMOS table, Figure 6 and Figure 7 for additional information

[+] Feedback

Power Supply Characteristics

Parameter	Description	Test Conditions	Min	Typ	Max	Unit
ICCD	Dynamic Power Supply Current	V_{DD} = Max. Input toggling 50% Duty Cycle, Outputs Open		1.5	2.0	mA/ MHz
IC	Total Power Supply Current	V_{DD} = Max. Input toggling 50% Duty Cycle, Outputs 50 ohms, fL=100 MHz			350	mA
IC Core	Core Current when Output Loads are Disabled	V_{DD} = Max. Input toggling 50% Duty Cycle, Outputs Disabled, not connected to VTT fL = 100 MHz			50	mA

Input Receiver Configuration for Differential or LVTTL/LVCMOS

INCONFIG Pin 7 Binary Value	Input Receiver Family	Input Receiver Type
1	LVTTL in LVCMOS	Single ended, non inverting, inverting, void of bias resistors
0	LVDS	Low voltage differential signaling
	LVPECL	Low voltage pseudo (positive) emitter coupled logic

Function Control of the TTL Input Logic used to Accept or Invert the Input Signal

LVTTL/LVCMOS Input Logic			
Input Condition		Input Logic	Output Logic Q Pins, Q1A or Q1
Ground	Input B (–) Pin 11		
	Input A (+) Pin 10	Input	True
V_{DD}	Input B (–) Pin 11		
	Input A (+) Pin 10	Input	Invert
Ground	Input A (+) Pin 10		
	Input B (–) Pin 11	Input	Invert
V_{DD}	Input A (+) Pin 10		
	Input B (–) Pin 11	Input	True

[+] Feedback

Absolute Maximum Conditions

Parameter	Description		Condition	Min	Max	Unit
V_{DD}	DC Supply Voltage		Inputs and V_{CC}	–0.3	4.6	V
V_{DD}	DC Operating Voltage		Outputs	–0.3	V_{DD} + 0.3	V
V_{IN}	DC Input Voltage		Relative to V_{SS}, with or V_{DD} applied	–0.3	V_{DD} + 0.3	V
V_{OUT}	DC Output Voltage		Relative to V_{SS}	–0.3	V_{DD} + 0.9	V
V_{TT}	Output Termination Voltage			–	$V_{DD} \div 2$	V
T_S	Temperature, Storage		Non Functional	–65	+150	°C
T_A	Temperature, Operating Ambient	Commercial	Functional	0	70	°C
		Industrial	Functional	–40	+85	
Multiple Supplies: The voltage on any input or I/O pin cannot exceed the power pin during power up. Power supply sequencing is NOT required.						

DC Electrical Specifications

3.3V – LVDS Input at V_{DD} = 3.3V ± 5%, T_A = 0°C to 70°C or –40°C to 85°C

Parameter	Description	Conditions		Min	Typ	Max	Unit
V_{ID}	Magnitude of Differential Input Voltage			100		600	mV
V_{IC}	Common Mode of Differential Input Voltage$\lvert V_{ID} \rvert$ (minimum and maximum)			$\lvert V_{ID} \rvert/2$	2.4–($\lvert V_{ID} \rvert/2$)		V
I_{IH}	Input High Current	V_{DD} = Max.	$V_{IN} = V_{DD}$	–	±10	± 20	µA
I_{IL}	Input Low Current	V_{DD} = Max.	$V_{IN} = V_{SS}$	–	±10	± 20	µA

3.3V – LVPECL Input at V_{DD} = 3.3V ± 5%, T_A = 0°C to 70°C or –40°C to 85°C

Parameter	Description	Conditions		Min	Typ	Max	Unit
V_{ID}	Differential Input Voltage p-p	Guaranteed Logic High Level		400	–	2600	mV
V_{IH}	Input High Voltage	Guaranteed Logic High Level		2.15	–	2.4	V
V_{IL}	Input Low Voltage	Guaranteed Logic Low Level		1.5	–	1.8	V
I_{IH}	Input High Current	V_{DD} = Max.	$V_{IN} = V_{DD}$	–	±10	±20	µA
I_{IL}	Input Low Current	V_{DD} = Max.	$V_{IN} = V_{SS}$	–	±10	±20	µA
V_{CM}	Common-mode Voltage			1650	–	2250	mV

3.3V – LVTTL/LVCMOS Input at V_{DD} = 3.3V ± 5%, T_A = 0°C to 70°C or –40°C to 85°C

Parameter	Description	Conditions		Min	Typ	Max	Units
V_{IH}	Input High Voltage	Guaranteed Logic High Level		2	–	–	V
V_{IL}	Input Low Voltage	Guaranteed Logic Low Level		–	–	0.8	V
I_{IH}	Input High Current	V_{DD} = Max	V_{IN} = 2.7V	–	–	1	µA
I_{IL}	Input Low Current	V_{DD} = Max	V_{IN} = 0.5V	–	–	–1	µA
I_I	Input High Current	V_{DD} = Max, $V_{IN} = V_{DD}$ (Max)					
V_{IK}	Clamp Diode Voltage	V_{DD} = Min, I_{IN} = –18 mA		–	–0.7	–1.2	V
V_H	Input Hysteresis[1]			–	80		mV

Note
1. Guaranteed but not tested.

[+] Feedback

3.3V – LVPECL Output at V_{DD} = 3.3V ± 5%, T_A = 0°C to 70°C or –40°C to 85°C

Parameter	Description	Conditions		Min	Typ	Max	Unit
V_{OD}	Driver Differential Output Voltage p-p	V_{DD} = Min, V_{IN} = V_{IH} or V_{IL}	RL = 50 ohm	1000	–	3600	mV
ΔV_{OC}	Driver common-Mode Variation p-p	V_{DD} = Min, V_{IN} = V_{IH} or V_{IL}	RL = 50 ohm	–	–	300	mV
Rise Time	Differential 20% to 80%	CL–10 pF RL and CL to GND	RL = 50 ohm	300		1200	ps
Fall Time							
V_{OH}	Output High Voltage	V_{DD} = Min, V_{IN} = V_{IH} or V_{IL}	I_{OH} = –12 mA	2.1	–	3.0	V
V_{OL}	Output Low Voltage	V_{DD} = Min, V_{IN} = V_{IH} or V_{IL} User-defined by VTT RTT.		0.8	–	1.3	V
I_{OS}	Short Circuit Current	V_{DD} = Max, V_{OUT} = GND		–	–	–150	mA

AC Switching Characteristics

(at V_{DD} = 3.3V ± 5%, T_A = 0°C to 70°C or –40°C to 85°C)

Parameter	Description	Conditions	Min	Typ	Max	Unit
t_{PLH}	Propagation Delay – Low to High	V_{OD} = 100 mV	3	4	5	ns
t_{PHL}	Propagation Delay – High to Low		3	4	5	ns
T_{PE}	Enable (EN) to Functional Operation		–	–	6	ns
T_{PD}	Functional Operation to Disable		–	–	5	ns
$t_{SK(0)}$	Output Skew: Skew between outputs of the same package (in phase)		–	–	0.2	ns
$t_{SK(p)}$	Pulse Skew: Skew between opposite transitions of the same output (t_{PHL}–t_{PLH})		–	0.2		ns
$t_{SK(t)}$	Package Skew: Skew between outputs of different packages at the same power supply voltage, temperature, and package type. Same input signal level and output load.	V_{ID} = 100 mV	–	–	1	ns

High Frequency Parametrics

Parameter	Description	Conditions	Min	Typ	Max	Unit
Fmax	Maximum Frequency V_{DD} = 3.3V	45% to 55% duty cycle Standard load circuit	–	–	350	MHz

Figure 2. Driver Design

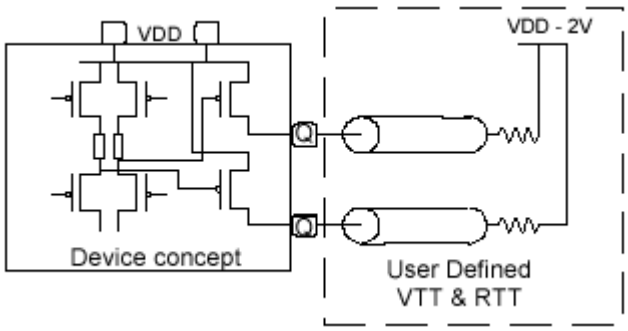

[+] Feedback

Figure 3. Differential Receiver to Driver Propagation Delay and Driver Transition Time[2,3,4,5]

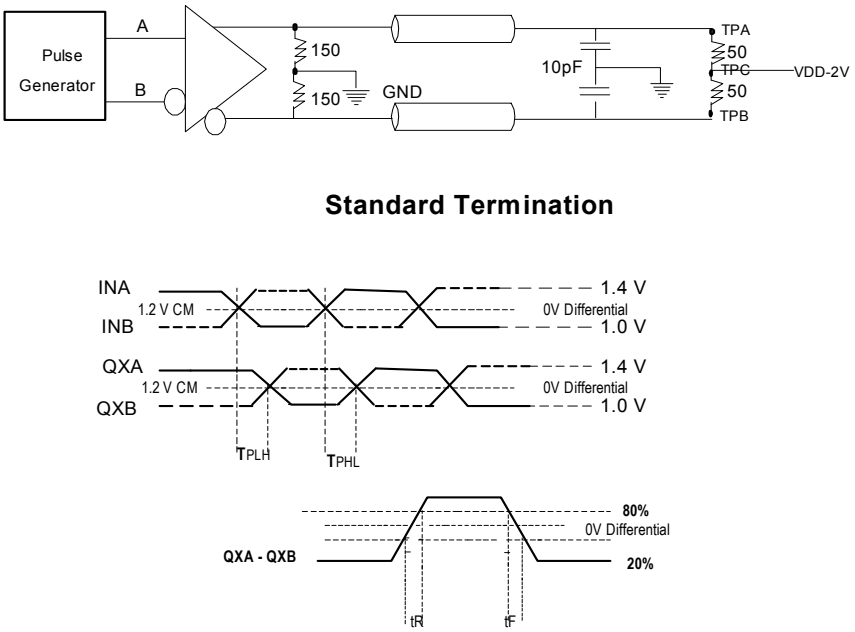

Figure 4. Test Circuit and Voltage Definitions for the Driver Common-Mode Output Voltage[2,3,4,5]

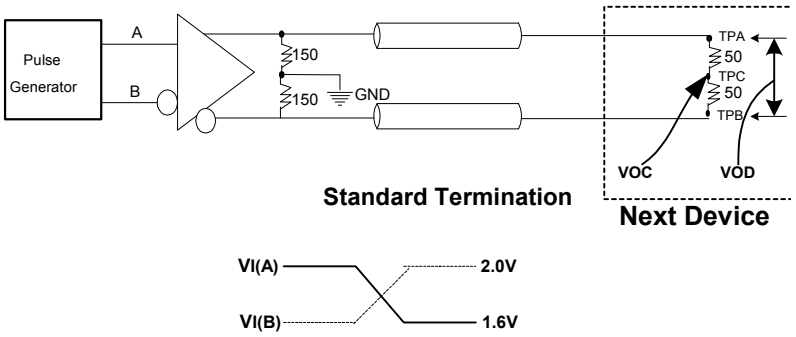

Notes

2. All input pulses are supplied by a frequency generator with the following characteristics: t_R and $t_F \leq 1$ ns; pulse rerate = 50 Mpps; pulse width = 10 ± 0.2 ns.
3. RL = 50 ohm ± 1%; Zline = 50 ohm 6".
4. CL includes instrumentation and fixture capacitance within 6" of the DUT.
5. TPA and B are used for prop delay and Rise/Fall measurements. TPC is used for VOC measurements only and is otherwise connected to V_{DD} – 2.

[+] Feedback

Figure 5. Test Circuit and Voltage Definitions for the Differential Output Signal[2,3,4,5]

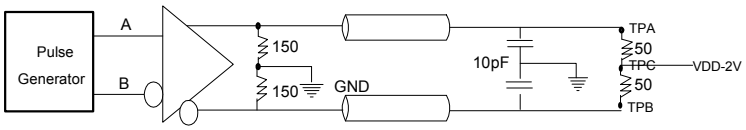

Standard Termination

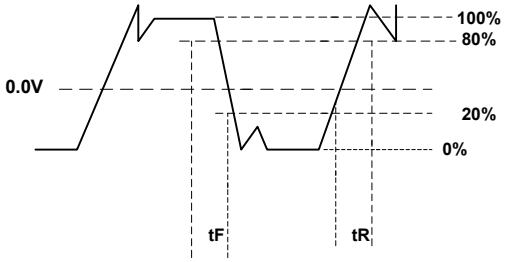

Figure 6. LVTTL/LVCMOS[6]

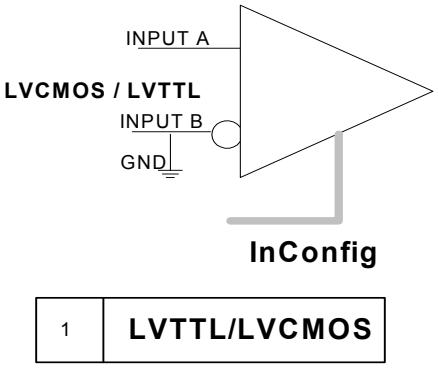

Figure 7. LVDS/LVPECL[6]

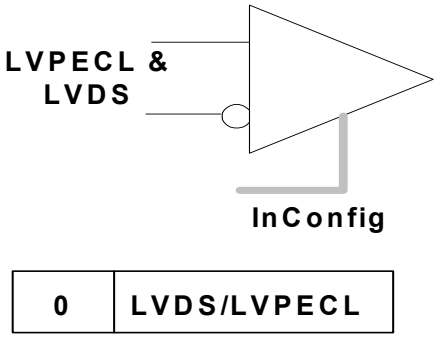

Ordering Information

Part Number	Package Type	Product Flow
CY2DP818ZI-2	38-Pin TSSOP	Industrial, –40° to 85°C
CY2DP818ZI-2T	38-Pin TSSOP–Tape and Reel	Industrial, –40° to 85°C
CY2DP818ZC-2	38-Pin TSSOP	Commercial, 0°C to 70°C
CY2DP818ZC-2T	38-Pin TSSOP–Tape and Reel	Commercial, 0°C to 70°C
Pb Free Devices		
CY2DP818ZXI-2	38-Pin TSSOP	Industrial, –40° to 85°C
CY2DP818ZXI-2T	38-Pin TSSOP–Tape and Reel	Industrial, –40° to 85°C
CY2DP818ZXC-2	38-Pin TSSOP	Commercial, 0°C to 70°C
CY2DP818ZXC-2T	38-Pin TSSOP–Tape and Reel	Commercial, 0°C to 70°C

Note
6. LVPECL or LVDS differential input value.

[+] Feedback

Package Drawing and Dimensions

Figure 8. 38-Pin TSSOP (4.40 mm Body) Z38

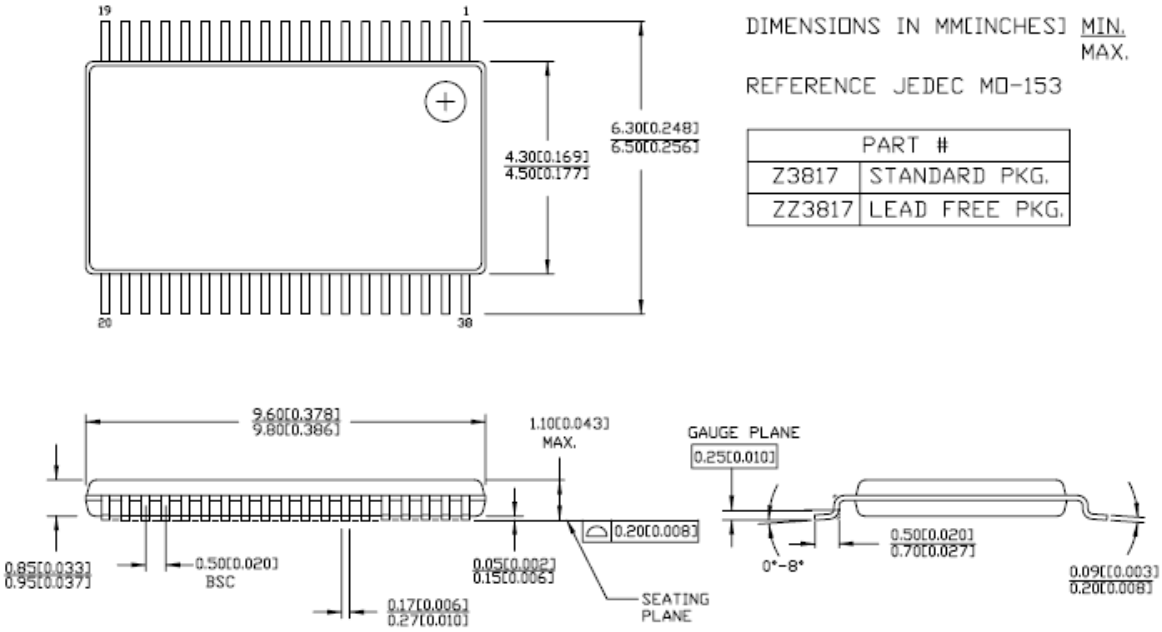

[+] Feedback

Document History Page

Document Title: CY2DP818-2 1:8 Clock Fanout Buffer Document Number: 38-07588				
Rev.	**ECN No.**	**Submission Date**	**Orig. of Change**	**Description of Change**
**	129879	11/07/03	RGL	New Data Sheet
*A	2595534	10/23/08	CXQ/PYRS	Removed “Preliminary”, added Pb-free devices to Ordering Information

Sales, Solutions, and Legal Information

Worldwide Sales and Design Support

Cypress maintains a worldwide network of offices, solution centers, manufacturer’s representatives, and distributors. To find the office closest to you, visit us at cypress.com/sales.

Products

PSoC	psoc.cypress.com
Clocks & Buffers	clocks.cypress.com
Wireless	wireless.cypress.com
Memories	memory.cypress.com
Image Sensors	image.cypress.com

PSoC Solutions

General	psoc.cypress.com/solutions
Low Power/Low Voltage	psoc.cypress.com/low-power
Precision Analog	psoc.cypress.com/precision-analog
LCD Drive	psoc.cypress.com/lcd-drive
CAN 2.0b	psoc.cypress.com/can
USB	psoc.cypress.com/usb

© Cypress Semiconductor Corporation, 2003-2008. The information contained herein is subject to change without notice. Cypress Semiconductor Corporation assumes no responsibility for the use of any circuitry other than circuitry embodied in a Cypress product. Nor does it convey or imply any license under patent or other rights. Cypress products are not warranted nor intended to be used for medical, life support, life saving, critical control or safety applications, unless pursuant to an express written agreement with Cypress. Furthermore, Cypress does not authorize its products for use as critical components in life-support systems where a malfunction or failure may reasonably be expected to result in significant injury to the user. The inclusion of Cypress products in life-support systems application implies that the manufacturer assumes all risk of such use and in doing so indemnifies Cypress against all charges.

Any Source Code (software and/or firmware) is owned by Cypress Semiconductor Corporation (Cypress) and is protected by and subject to worldwide patent protection (United States and foreign), United States copyright laws and international treaty provisions. Cypress hereby grants to licensee a personal, non-exclusive, non-transferable license to copy, use, modify, create derivative works of, and compile the Cypress Source Code and derivative works for the sole purpose of creating custom software and or firmware in support of licensee product to be used only in conjunction with a Cypress integrated circuit as specified in the applicable agreement. Any reproduction, modification, translation, compilation, or representation of this Source Code except as specified above is prohibited without the express written permission of Cypress.

Disclaimer: CYPRESS MAKES NO WARRANTY OF ANY KIND, EXPRESS OR IMPLIED, WITH REGARD TO THIS MATERIAL, INCLUDING, BUT NOT LIMITED TO, THE IMPLIED WARRANTIES OF MERCHANTABILITY AND FITNESS FOR A PARTICULAR PURPOSE. Cypress reserves the right to make changes without further notice to the materials described herein. Cypress does not assume any liability arising out of the application or use of any product or circuit described herein. Cypress does not authorize its products for use as critical components in life-support systems where a malfunction or failure may reasonably be expected to result in significant injury to the user. The inclusion of Cypress’ product in a life-support systems application implies that the manufacturer assumes all risk of such use and in doing so indemnifies Cypress against all charges.

Use may be limited by and subject to the applicable Cypress software license agreement.

All products and company names mentioned in this document may be the trademarks of their respective holders.

[+] Feedback

OCEAN CHIPS
Океан Электроники
Поставка электронных компонентов

Компания «Океан Электроники» предлагает заключение долгосрочных отношений при поставках импортных электронных компонентов на взаимовыгодных условиях!

Наши преимущества:

- Поставка оригинальных импортных электронных компонентов напрямую с производств Америки, Европы и Азии, а так же с крупнейших складов мира;
- Широкая линейка поставок активных и пассивных импортных электронных компонентов (более 30 млн. наименований);
- Поставка сложных, дефицитных, либо снятых с производства позиций;
- Оперативные сроки поставки под заказ (от 5 рабочих дней);
- Экспресс доставка в любую точку России;
- Помощь Конструкторского Отдела и консультации квалифицированных инженеров;
- Техническая поддержка проекта, помощь в подборе аналогов, поставка прототипов;
- Поставка электронных компонентов под контролем ВП;
- Система менеджмента качества сертифицирована по Международному стандарту ISO 9001;
- При необходимости вся продукция военного и аэрокосмического назначения проходит испытания и сертификацию в лаборатории (по согласованию с заказчиком);
- Поставка специализированных компонентов военного и аэрокосмического уровня качества (Xilinx, Altera, Analog Devices, Intersil, Interpoint, Microsemi, Actel, Aeroflex, Peregrine, VPT, Syfer, Eurofarad, Texas Instruments, MS Kennedy, Miteq, Cobham, E2V, MA-COM, Hittite, Mini-Circuits, General Dynamics и др.);

Компания «Океан Электроники» является официальным дистрибьютором и эксклюзивным представителем в России одного из крупнейших производителей разъемов военного и аэрокосмического назначения **«JONHON»**, а так же официальным дистрибьютором и эксклюзивным представителем в России производителя высокотехнологичных и надежных решений для передачи СВЧ сигналов **«FORSTAR»**.

AVIC JONHON

«JONHON» (основан в 1970 г.)

Разъемы специального, военного и аэрокосмического назначения:

(Применяются в военной, авиационной, аэрокосмической, морской, железнодорожной, горно- и нефтедобывающей отраслях промышленности)

«FORSTAR» (основан в 1998 г.)

ВЧ соединители, коаксиальные кабели, кабельные сборки и микроволновые компоненты:

(Применяются в телекоммуникациях гражданского и специального назначения, в средствах связи, РЛС, а так же военной, авиационной и аэрокосмической отраслях промышленности).

FORSTAR®

Телефон: 8 (812) 309-75-97 (многоканальный)
Факс: 8 (812) 320-03-32
Электронная почта: ocean@oceanchips.ru
Web: http://oceanchips.ru/
Адрес: 198099, г. Санкт-Петербург, ул. Калинина, д. 2, корп. 4, лит. А