FAIRCHILD SEMICONDUCTOR™

January 2002
Revised February 2002

FIN1102
LVDS 2 Port High Speed Repeater

General Description

This 2 port repeater is designed for high speed interconnects utilizing Low Voltage Differential Signaling (LVDS) technology. The FIN1102 accepts and outputs LVDS levels with a typical differential output swing of 330 mV which provides low EMI at ultra low power dissipation even at high frequencies. The FIN1102 provides a V_{BB} reference for AC coupling on the inputs. In addition the FIN1102 can also directly accept LVPECL, HSTL, and SSTL-2 for translation to LVDS.

Features

- Greater than 800 Mbps full differential path
- 3.3V power supply operation
- 3.5 ps maximum random jitter and 135 ps maximum deterministic jitter
- Wide rail-to-rail common mode range
- LVDS receiver inputs accept LVPECL, HSTL, and SSTL-2 directly
- Ultra low power consumption
- 20 ps typical channel-to-channel skew
- Power off protection
- > 7 kV HBM ESD Protection
- Meets or exceeds the TIA/EIA-644-A LVDS standard
- 14-lead TSSOP package saves space
- Open circuit fail safe protection
- V_{BB} reference output

Ordering Code:

Order Number	Package Number	Package Description
FIN1102MTC	MTC14	14-Lead Thin Shrink Small Outline Package (TSSOP), JEDEC MO-153, 4.4mm Wide

Devices also available in Tape and Reel. Specify by appending suffix letter "X" to the ordering code.

Pin Descriptions

Pin Name	Description
R_{IN1+}, R_{IN2+}	Non-inverting LVDS Input
R_{IN1-}, R_{IN2-}	Inverting LVDS Input
D_{OUT1+}, D_{OUT2+}	Non-inverting Driver Output
D_{OUT1-}, D_{OUT2-}	Inverting Driver Output
EN	Driver Enable Pin for All Output
V_{CC}	Power Supply
GND	Ground
V_{BB}	Reference Voltage Output

Function Table

Inputs			Outputs	
EN	D_{IN+}	D_{IN-}	D_{OUT+}	D_{OUT-}
H	H	L	H	L
H	L	H	L	H
H	Fail Safe Case		H	L
L	X	X	Z	Z

H = HIGH Logic Level
L = LOW Logic Level
X = Don't Care
Z = High Impedance

Connection Diagram

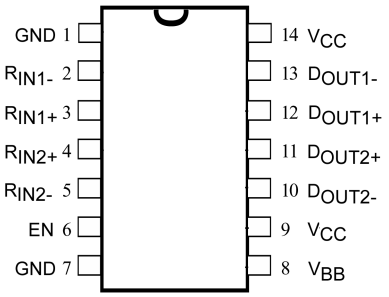

Functional Diagram

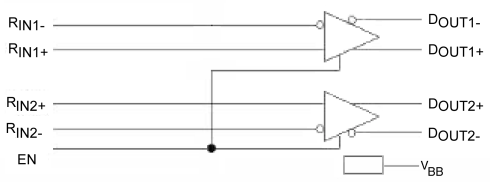

© 2002 Fairchild Semiconductor Corporation

Absolute Maximum Ratings(Note 1)

Supply Voltage (V_{CC})	−0.5V to +4.6V
LVDS DC Input Voltage (V_{IN})	−0.5V to +4.6V
LVDS DC Output Voltage (V_{OUT})	−0.5V to +4.6V
Driver Short Circuit Current (I_{OSD})	Continuous 10 mA
Storage Temperature Range (T_{STG})	−65°C to +150°C
Max Junction Temperature (T_J)	150°C
Lead Temperature (T_L)	
(Soldering, 10 seconds)	260°C
ESD (Human Body Model)	7000V
ESD (Machine Model)	300V

Recommended Operating Conditions

Supply Voltage (V_{CC})	3.0V to 3.6V
Magnitude of Differential Voltage ($\|V_{ID}\|$)	100 mV to V_{CC}
Common Mode Voltage Range (V_{IC})	(0V + $\|V_{ID}\|/2$) to (V_{CC} − $\|V_{ID}\|/2$)
Operating Temperature (T_A)	−40°C to +85°C

Note 1: The "Absolute Maximum Ratings": are those values beyond which damage to the device may occur. The databook specifications should be met, without exception, to ensure that the system design is reliable over its power supply, temperature and output/input loading variables. Fairchild does not recommend operation of circuits outside databook specification.

DC Electrical Characteristics

Symbol	Parameter	Test Conditions		Min	Typ (Note 2)	Max	Units
V_{TH}	Differential Input Threshold HIGH	See Figure 1; V_{IC} = +0.05V, +1.2V, or V_{CC} − 0.05V				100	mV
V_{TL}	Differential Input Threshold LOW	See Figure 1; V_{IC} = +0.05V, +1.2V, or V_{CC} − 0.05V		−100			mV
V_{IH}	Input HIGH Voltage (EN)			2.0		V_{CC}	V
V_{IL}	Input LOW Voltage (EN)			GND		0.8	V
V_{OD}	Output Differential Voltage	R_L = 100 Ω, Driver Enabled, See Figure 2		250	330	450	mV
ΔV_{OD}	V_{OD} Magnitude Change from Differential LOW-to-HIGH					25	mV
V_{OS}	Offset Voltage			1.125	1.23	1.375	V
ΔV_{OS}	Offset Magnitude Change from Differential LOW-to-HIGH					25	mV
I_{OS}	Short Circuit Output Current	D_{OUT+} = 0V and D_{OUT-} = 0V, Driver Enabled			−3.4	−6	mA
		V_{OD} = 0V, Driver Enabled			±3.4	±6	mA
I_{IN}	Input Current (EN, D_{INx+}, D_{INx-})	V_{IN} = 0V to V_{CC}, Other Input = V_{CC} or 0V (for Differential Inputs)				±20	µA
I_{OFF}	Power Off Input or Output Current	V_{CC} = 0V, V_{IN} or V_{OUT} = 0V to 3.6V				±20	µA
I_{CCZ}	Disabled Power Supply Current	Drivers Disabled			4	7	mA
I_{CC}	Power Supply Current	Drivers Enabled, Any Valid Input Condition			16.7	23	mA
I_{OZ}	Disabled Output Leakage Current	Driver Disabled, D_{OUT+} = 0V to 3.6V or D_{OUT-} = 0V to 3.6V				±20	µA
V_{IC}	Common Mode Voltage Range	$\|V_{ID}\|$ = 100 mV to V_{CC}		0V + $\|V_{ID}\|/2$		V_{CC} − ($\|V_{ID}\|/2$)	V
C_{IN}	Input Capacitance		Enable Input		2.5		pF
			LVDS Input		2.1		
C_{OUT}	Output Capacitance				2.8		pF
V_{BB}	Output Reference Voltage	V_{CC} = 3.3V, I_{BB} = 0 to −275 µA		1.125	1.2	1.375	V

Note 2: All typical values are at T_A = 25°C and with V_{CC} = 3.3V.

AC Electrical Characteristics

Over supply voltage and operating temperature ranges, unless otherwise specified

Symbol	Parameter	Test Conditions	Min	Typ (Note 3)	Max	Units
t_{PLHD}	Differential Output Propagation Delay LOW-to-HIGH	R_L = 100 Ω, C_L = 5 pF, $\|V_{ID}\|$ = 200 mV to 450 mV, $V_{IC} = \|V_{ID}\|/2$ to $V_{CC} - (\|V_{ID}\|/2)$, Duty Cycle = 50%, See Figure 3 and Figure 4	0.75	1.1	1.75	ns
t_{PHLD}	Differential Output Propagation Delay HIGH-to-LOW		0.75	1.1	1.75	ns
t_{TLHD}	Differential Output Rise Time (20% to 80%)		0.29	0.4	0.58	ns
t_{THLD}	Differential Output Fall Time (80% to 20%)		0.29	0.4	0.58	ns
$t_{SK(P)}$	Pulse Skew $\|t_{PLH} - t_{PHL}\|$			0.02	0.2	ns
$t_{SK(LH)}$, $t_{SK(HL)}$	Channel-to-Channel Skew (Note 4)			0.02 0.02	0.15	ns
$t_{SK(PP)}$	Part-to-Part Skew (Note 5)				0.5	ns
f_{MAX}	Maximum Frequency (Note 6)(Note 7)		400	800		MHz
t_{PZHD}	Differential Output Enable Time from Z to HIGH	R_L = 100 Ω, C_L = 5 pF, See Figure 5 and Figure 6		2.3	5	ns
t_{PZLD}	Differential Output Enable Time from Z to LOW			2.5	5	ns
t_{PHZD}	Differential Output Disable Time from HIGH to Z			1.6	5	ns
t_{PLZD}	Differential Output Disable Time from LOW to Z			1.9	5	ns
t_{DJ}	LVDS Data Jitter, Deterministic	$\|V_{ID}\|$ = 300 mV, PRBS = 2^{23} - 1, V_{IC} = 1.2V at 800 Mbps		85	135	ps
t_{RJ}	LVDS Clock Jitter, Random (RMS)	$\|V_{ID}\|$ = 300 mV, V_{IC} = 1.2V at 400 MHz		2.1	3.5	ps

Note 3: All typical values are at T_A = 25°C and with V_{CC} = 3.3V, V_{ID} = 300 mV, V_{IC} = 1.2V, unless otherwise specified.

Note 4: $t_{SK(LH)}$, $t_{SK(HL)}$ is the skew between specified outputs of a single device when the outputs have identical loads and are switching in the same direction.

Note 5: $t_{SK(PP)}$ is the magnitude of the difference in differential propagation delay times between identical channels of two devices switching in the same direction (either Low-to-HIGH or HIGH-to-LOW) when both devices operate with the same supply voltage, same temperature, and have identical test circuits.

Note 6: Passing criteria for maximum frequency is the output V_{OD} > 200 mV and the duty cycle is 45% to 55% with all channels switching.

Note 7: Output loading is transmission line environment only; C_L is < 1 pF of stray test fixture capacitance.

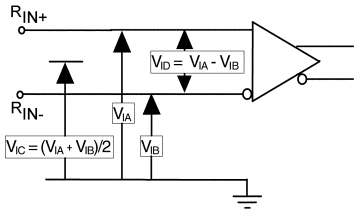

FIGURE 1. Differential Receiver Voltage Definitions and Propagation and Transition Time Test Circuit

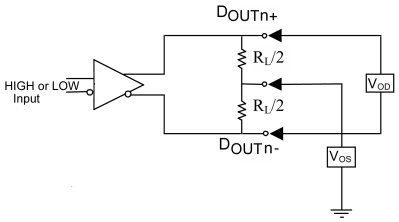

FIGURE 2. Differential Driver DC Test Circuit

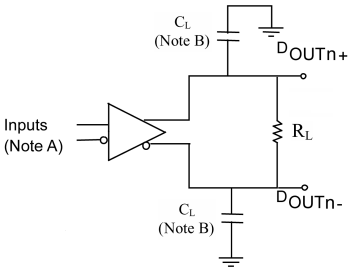

Note A: All LVDS input pulses have frequency = 10 MHz, t_R or t_F < = 0.5 ns

Note B: C_L includes all probe and test fixture capacitances

FIGURE 3. Differential Driver Propagation Delay and Transition Time Test Circuit

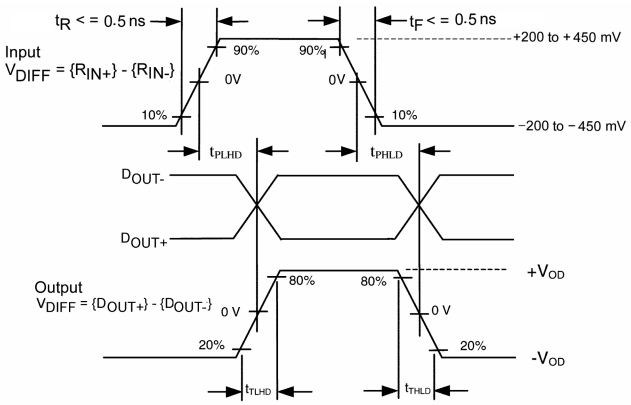

FIGURE 4. AC Waveform

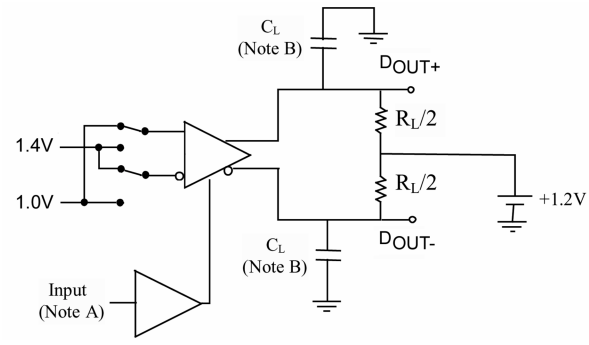

Note A: All input pulses have frequency = 10MHz, t_R or t_F < = 2 ns

Note B: C_L includes all probe and test fixture capacitances

FIGURE 5. Differential Driver Enable and Disable Circuit

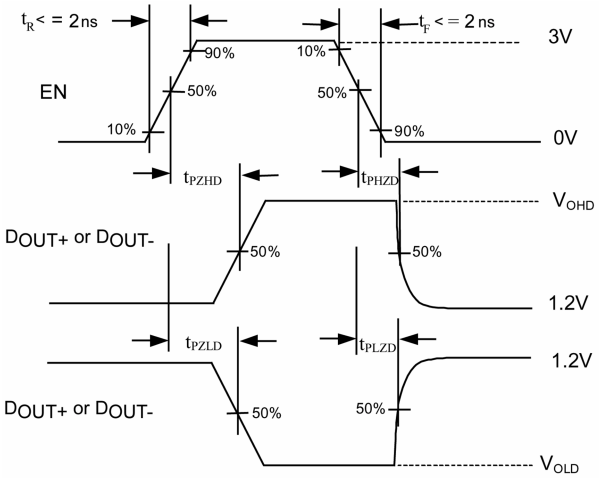

FIGURE 6. Enable and Disable AC Waveforms

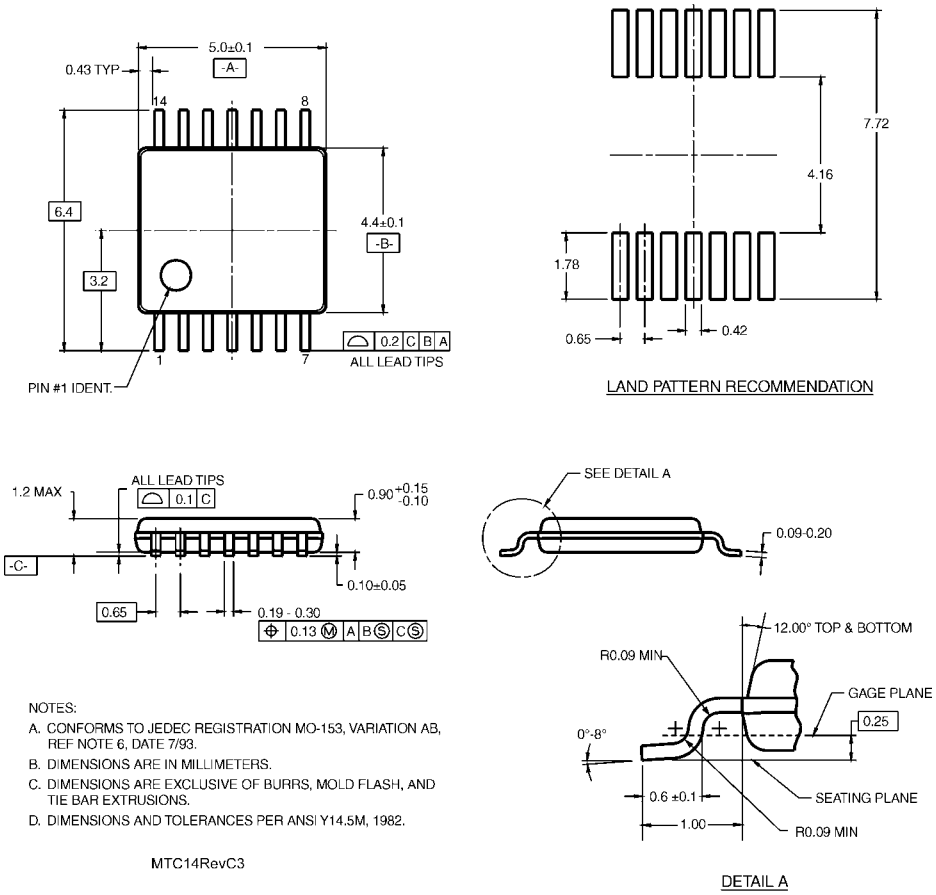

14-Lead Thin Shrink Small Outline Package (TSSOP), JEDEC MO-153, 4.4mm Wide
Package Number MTC14

Fairchild does not assume any responsibility for use of any circuitry described, no circuit patent licenses are implied and Fairchild reserves the right at any time without notice to change said circuitry and specifications.

LIFE SUPPORT POLICY

FAIRCHILD'S PRODUCTS ARE NOT AUTHORIZED FOR USE AS CRITICAL COMPONENTS IN LIFE SUPPORT DEVICES OR SYSTEMS WITHOUT THE EXPRESS WRITTEN APPROVAL OF THE PRESIDENT OF FAIRCHILD SEMICONDUCTOR CORPORATION. As used herein:

1. Life support devices or systems are devices or systems which, (a) are intended for surgical implant into the body, or (b) support or sustain life, and (c) whose failure to perform when properly used in accordance with instructions for use provided in the labeling, can be reasonably expected to result in a significant injury to the user.
2. A critical component in any component of a life support device or system whose failure to perform can be reasonably expected to cause the failure of the life support device or system, or to affect its safety or effectiveness.

www.fairchildsemi.com

OCEAN CHIPS
Океан Электроники
Поставка электронных компонентов

Компания «Океан Электроники» предлагает заключение долгосрочных отношений при поставках импортных электронных компонентов на взаимовыгодных условиях!

Наши преимущества:

- Поставка оригинальных импортных электронных компонентов напрямую с производств Америки, Европы и Азии, а так же с крупнейших складов мира;
- Широкая линейка поставок активных и пассивных импортных электронных компонентов (более 30 млн. наименований);
- Поставка сложных, дефицитных, либо снятых с производства позиций;
- Оперативные сроки поставки под заказ (от 5 рабочих дней);
- Экспресс доставка в любую точку России;
- Помощь Конструкторского Отдела и консультации квалифицированных инженеров;
- Техническая поддержка проекта, помощь в подборе аналогов, поставка прототипов;
- Поставка электронных компонентов под контролем ВП;
- Система менеджмента качества сертифицирована по Международному стандарту ISO 9001;
- При необходимости вся продукция военного и аэрокосмического назначения проходит испытания и сертификацию в лаборатории (по согласованию с заказчиком);
- Поставка специализированных компонентов военного и аэрокосмического уровня качества (Xilinx, Altera, Analog Devices, Intersil, Interpoint, Microsemi, Actel, Aeroflex, Peregrine, VPT, Syfer, Eurofarad, Texas Instruments, MS Kennedy, Miteq, Cobham, E2V, MA-COM, Hittite, Mini-Circuits, General Dynamics и др.);

Компания «Океан Электроники» является официальным дистрибьютором и эксклюзивным представителем в России одного из крупнейших производителей разъемов военного и аэрокосмического назначения **«JONHON»**, а так же официальным дистрибьютором и эксклюзивным представителем в России производителя высокотехнологичных и надежных решений для передачи СВЧ сигналов **«FORSTAR»**.

AVIC JONHON

«JONHON» (основан в 1970 г.)

Разъемы специального, военного и аэрокосмического назначения:

(Применяются в военной, авиационной, аэрокосмической, морской, железнодорожной, горно- и нефтедобывающей отраслях промышленности)

«FORSTAR» (основан в 1998 г.)

ВЧ соединители, коаксиальные кабели, кабельные сборки и микроволновые компоненты:

(Применяются в телекоммуникациях гражданского и специального назначения, в средствах связи, РЛС, а так же военной, авиационной и аэрокосмической отраслях промышленности).

FORSTAR®

Телефон: 8 (812) 309-75-97 (многоканальный)
Факс: 8 (812) 320-03-32
Электронная почта: ocean@oceanchips.ru
Web: http://oceanchips.ru/
Адрес: 198099, г. Санкт-Петербург, ул. Калинина, д. 2, корп. 4, лит. А