RoHS

Qxx15xx & Qxx16xHx Series

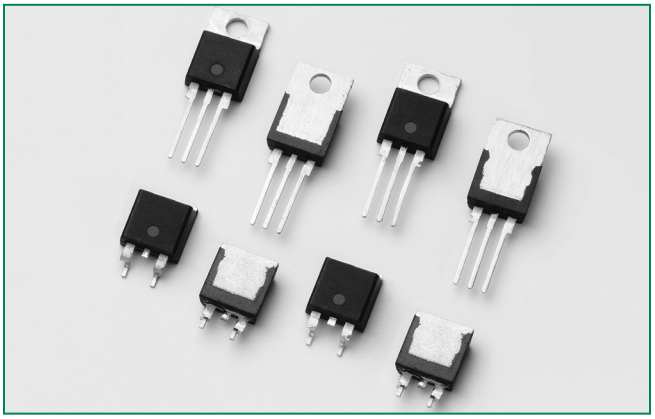

Agency Approval

Agency	Agency File Number
	L Package : E71639

Main Features

Symbol	Value	Unit
$I_{T(RMS)}$	15 & 16	A
V_{DRM}/V_{RRM}	400 to 1000	V
$I_{GT\ (Q1)}$	10 to 80	mA

Schematic Symbol

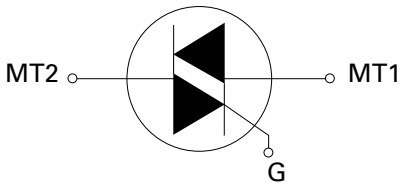

Description

15 Amp and 16 Amp bi-directional solid state switch series is designed for AC switching and phase control applications such as motor speed and temperature modulation controls, lighting controls, and static switching relays.

Standard type devices normally operate in Quadrants I & III triggered from AC line.

Alternistor type devices only operate in quadrants I, II, & III and are used in circuits requiring high dv/dt capability.

Features & Benefits

- RoHS Compliant
- Glass – passivated junctions
- Voltage capability up to 1000 V
- Surge capability up to 200 A
- Electrically isolated "L-Package" is UL recognized for 2500Vrms
- Solid-state switching eliminates arcing or contact bounce that create voltage transients
- No contacts to wear out from reaction of switching events
- Restricted (or limited) RFI generation, depending on activation point in sine wave
- Requires only a small gate activation pulse in each half-cycle

Applications

Excellent for AC switching and phase control applications such as heating, lighting, and motor speed controls.

Typical applications are AC solid-state switches, light dimmers, power tools, lawn care equipment, home/brown goods and white goods appliances.

Alternistor Triacs (no snubber required) are used in applications with extremely inductive loads requiring highest commutation performance.

Internally constructed isolated packages are offered for ease of heat sinking with highest isolation voltage.

©2010 Littelfuse, Inc
Specifications are subject to change without notice.
Please refer to http://www.littelfuse.com for current information.

Absolute Maximum Ratings — Standard Triac

Symbol	Parameter			Value	Unit
$I_{T(RMS)}$	RMS on-state current (full sine wave)	Qxx15Ly	T_C = 80°C	15	A
		Qxx15Ry Qxx15Ny	T_C = 90°C		
I_{TSM}	Non repetitive surge peak on-state current (full cycle, T_J initial = 25°C)	f = 50 Hz	t = 20 ms	167	A
		f = 60 Hz	t = 16.7 ms	200	
I^2t	I^2t Value for fusing		t_p = 8.3 ms	166	A^2s
di/dt	Critical rate of rise of on-state current	f = 120 Hz	T_J = 125°C	100	A/µs
I_{GTM}	Peak gate trigger current	$t_p \le 10$ µs $I_{GT} \le I_{GTM}$	T_J = 125°C	2.0	A
$P_{G(AV)}$	Average gate power dissipation		T_J = 125°C	0.5	W
T_{stg}	Storage temperature range			-40 to 150	°C
T_J	Operating junction temperature range			-40 to 125	°C

Note: xx = voltage, y = sensitivity

Absolute Maximum Ratings — Alternistor Triac (3 Quadrants)

Symbol	Parameter			Value	Unit
$I_{T(RMS)}$	RMS on-state current (full sine wave)	Qxx16LHy	T_C = 80°C	16	A
		Qxx16RHy Qxx16NHy	T_C = 90°C		
I_{TSM}	Non repetitive surge peak on-state current (full cycle, T_J initial = 25°C)	f = 50 Hz	t = 20 ms	167	A
		f = 60 Hz	t = 16.7 ms	200	
I^2t	I^2t Value for fusing		t_p = 8.3 ms	166	A^2s
di/dt	Critical rate of rise of on-state current	f = 120 Hz	T_J = 125°C	100	A/µs
I_{GTM}	Peak gate trigger current	$t_p \le 10$ µs; $I_{GT} \le I_{GTM}$	T_J = 125°C	2.0	A
$P_{G(AV)}$	Average gate power dissipation		T_J = 125°C	0.5	W
T_{stg}	Storage temperature range			-40 to 150	°C
T_J	Operating junction temperature range			-40 to 125	°C

Note: xx = voltage, y = sensitivity

Electrical Characteristics (T_J = 25°C, unless otherwise specified) — Standard Triac

Symbol	Test Conditions	Quadrant		Value	Unit
I_{GT}	V_D = 12V R_L = 60 Ω	I – II – III	MAX.	50	mA
V_{GT}		I – II – III	MAX.	2.0	V
V_{GD}	$V_D = V_{DRM}$ R_L = 3.3 kΩ T_J = 125°C	I – II – III	MIN.	0.2	V
I_H	I_T = 100mA		MAX.	70	mA
dv/dt	$V_D = V_{DRM}$ Gate Open T_J = 125°C	400V	MIN.	275	V/µs
		600V		225	
		800V		200	
	$V_D = V_{DRM}$ Gate Open T_J = 100°C	1000V		200	
(dv/dt)c	(di/dt)c = 8.1 A/ms T_J = 125°C		MIN.	4	V/µs
t_{gt}	$I_G = 2 \times I_{GT}$ PW = 15µs I_T = 22.6 A(pk)		TYP.	4	µs

©2010 Littelfuse, Inc
Specifications are subject to change without notice.
Please refer to http://www.littelfuse.com for current information.

Electrical Characteristics (T_J = 25°C, unless otherwise specified) — Alternistor Triac (3 Quadrants)

Symbol	Test Conditions	Quadrant		Qxx16xH2	Qxx16xH3	Qxx16xH4	Qxx16xH6	Unit
I_{GT}	V_D = 12V R_L = 60 Ω	I – II – III	MAX.	10	20	35	80	mA
V_{GT}		I – II – III	MAX.	1.3				V
V_{GD}	$V_D = V_{DRM}$ R_L = 3.3 kΩ T_J = 125°C	I – II – III	MIN.	0.2				V
I_H	I_T = 100mA		MAX.	15	35	50	70	mA
dv/dt	$V_D = V_{DRM}$ Gate Open T_J = 125°C	400V	MIN.	200	350	475	925	V/µs
		600V		150	250	400	850	
		800V		100	200	350	475	
	$V_D = V_{DRM}$ Gate Open T_J = 100°C	1000V		100	200	300	350	
(dv/dt)c	(di/dt)c = 8.6 A/ms T_J = 125°C		MIN.	2	20	25	30	V/µs
t_{gt}	$I_G = 2 \times I_{GT}$ PW = 15µs I_T = 22.6 A(pk)		TYP.	3	3	3	5	µs

Static Characteristics

Symbol	Test Conditions				Value	Unit
V_{TM}	15A Device I_T = 21.2A t_p = 380µs			MAX	1.60	V
	16A Device I_T = 22.6A t_p = 380µs					
I_{DRM} I_{RRM}	$V_D = V_{DRM} / V_{RRM}$	T_J = 25°C	400-1000V	MAX	5	µA
		T_J = 125°C	400-800V		2	mA
		T_J = 100°C	1000V		3	

Thermal Resistances

Symbol	Parameter		Value	Unit
$R_{\theta(J-C)}$	Junction to case (AC)	Qxx15Ry Qxx15Ny Qxx16RHy Qxx16NHy	1.1	°C/W
		Qxx15Ly Qxx16LHy	2.1	
$R_{\theta(J-A)}$	Junction to ambient	Qxx15Ry Qxx16RHy	45	°C/W
		Qxx15Ly Qxx16LHy	50	

Note: xx = voltage; y = sensitivity

Figure 1: Definition of Quadrants

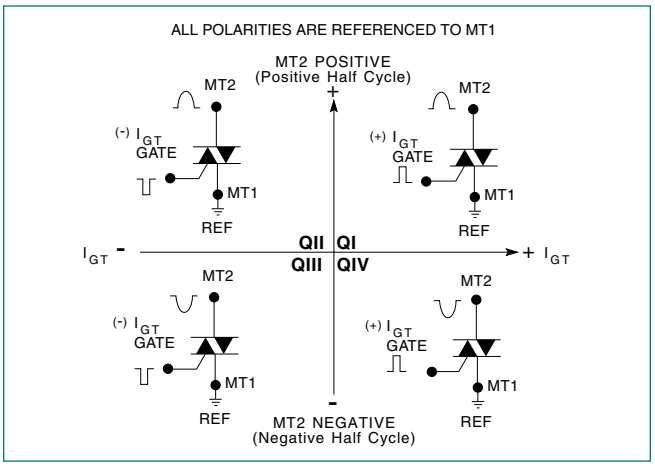

Note: Alternistors will not operate in QIV

Figure 2: Normalized DC Gate Trigger Current for All Quadrants vs. Junction Temperature

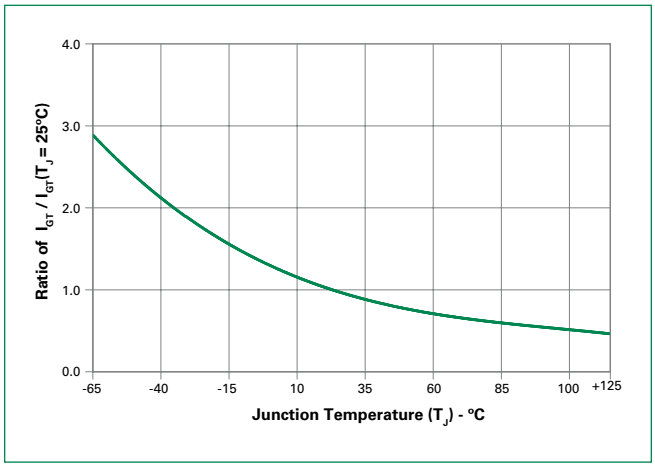

©2010 Littelfuse, Inc
Specifications are subject to change without notice.
Please refer to http://www.littelfuse.com for current information.

Figure 3: Normalized DC Holding Current vs. Junction Temperature

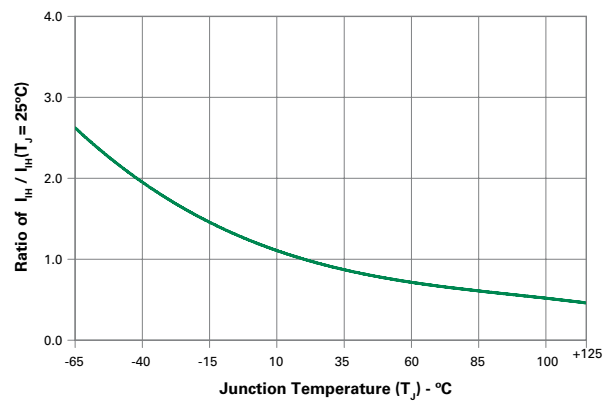

Figure 4: Normalized DC Gate Trigger Voltage for All Quadrants vs. Junction Temperature

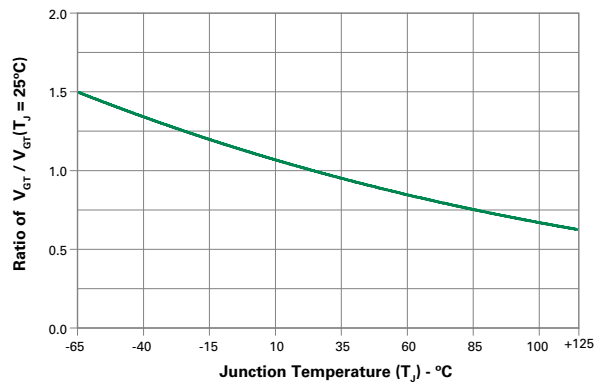

Figure 5: Power Dissipation (Typical) vs. RMS On-State Current

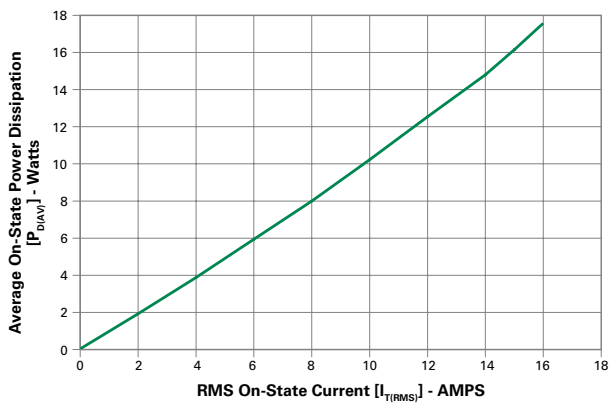

Figure 6: Maximum Allowable Case Temperature vs. On-State Current (15A devices)

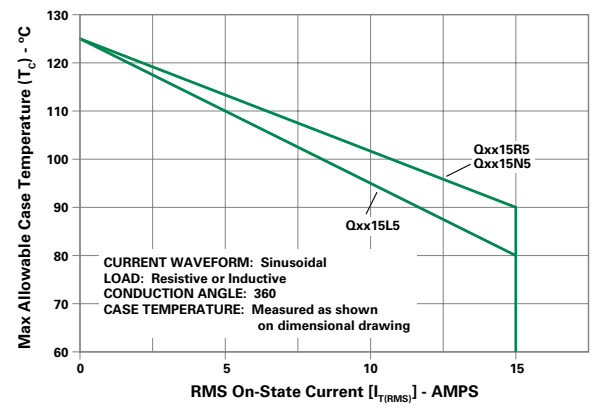

Figure 7: Maximum Allowable Case Temperature vs. On-State Current (16A devices)

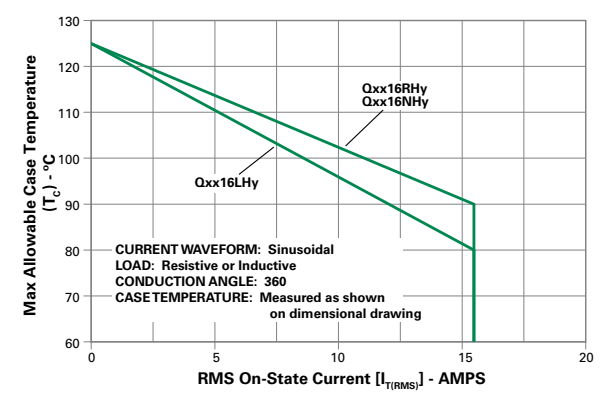

Figure 8: Maximum Allowable Ambient Temperature vs. On-State Current

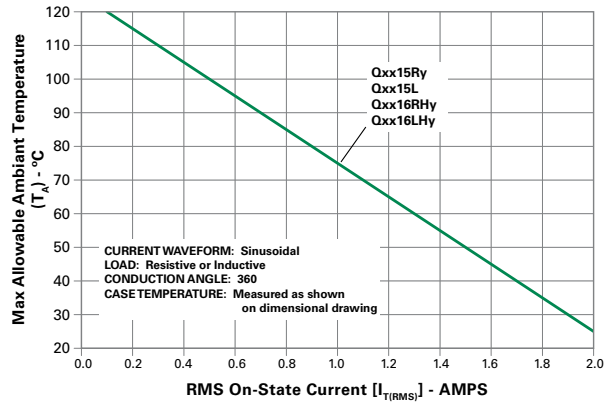

©2010 Littelfuse, Inc
Specifications are subject to change without notice.
Please refer to http://www.littelfuse.com for current information.

Figure 9: On-State Current vs. On-State Voltage (Typical)

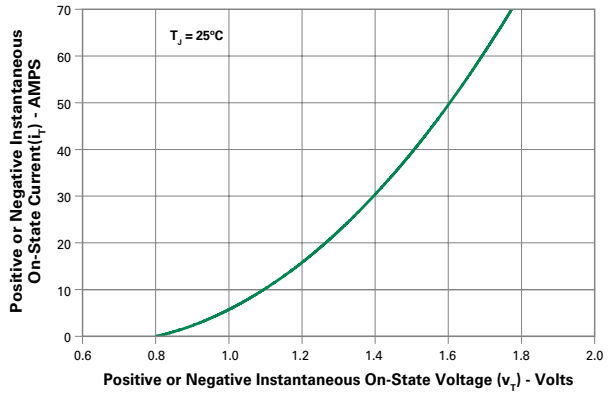

Figure 10: Surge Peak On-State Current vs. Number of Cycles

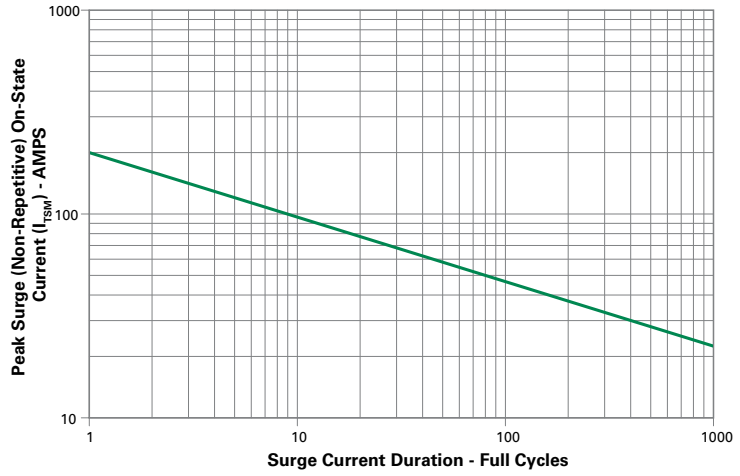

Supply Frequency: 60Hz Sinusoidal
Load: Resistive
RMS On-State [$I_{T(RMS)}$]: Max Rated Value at Specific Case Temperature

Notes:
1. Gate control may be lost during and immediately following surge current interval.
2. Overload may not be repeated until junction temperature has returned to steady-state rated value.

Soldering Parameters

Reflow Condition		Pb – Free assembly
Pre Heat	-Temperature Min ($T_{s(min)}$)	150°C
	-Temperature Max ($T_{s(max)}$)	200°C
	-Time (min to max) (t_s)	60 – 180 secs
Average ramp up rate (Liquidus Temp) (T_L) to peak		5°C/second max
$T_{S(max)}$ to T_L - Ramp-up Rate		5°C/second max
Reflow	-Temperature (T_L) (Liquidus)	217°C
	-Temperature (t_L)	60 – 150 seconds
Peak Temperature (T_P)		$260^{+0/5}$°C
Time within 5°C of actual peak Temperature (t_p)		20 – 40 seconds
Ramp-down Rate		5°C/second max
Time 25°C to peak Temperature (T_P)		8 minutes Max.
Do not exceed		280°C

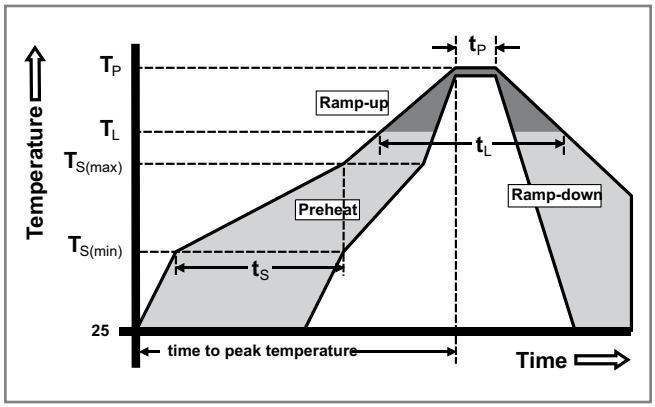

©2010 Littelfuse, Inc
Specifications are subject to change without notice.
Please refer to http://www.littelfuse.com for current information.

Physical Specifications

Terminal Finish	100% Matte Tin-plated
Body Material	UL recognized epoxy meeting flammability classification 94V-0
Terminal Material	Copper Alloy

Design Considerations

Careful selection of the correct device for the application's operating parameters and environment will go a long way toward extending the operating life of the Thyristor. Good design practice should limit the maximum continuous current through the main terminals to 75% of the device rating. Other ways to ensure long life for a power discrete semiconductor are proper heat sinking and selection of voltage ratings for worst case conditions. Overheating, overvoltage (including dv/dt), and surge currents are the main killers of semiconductors. Correct mounting, soldering, and forming of the leads also help protect against component damage.

Environmental Specifications

Test	Specifications and Conditions
AC Blocking	MIL-STD-750, M-1040, Cond A Applied Peak AC voltage @ 125°C for 1008 hours
Temperature Cycling	MIL-STD-750, M-1051, 100 cycles; -40°C to +150°C; 15-min dwell time
Temperature/ Humidity	EIA / JEDEC, JESD22-A101 1008 hours; 320V - DC: 85°C; 85% rel humidity
High Temp Storage	MIL-STD-750, M-1031, 1008 hours; 150°C
Low-Temp Storage	1008 hours; -40°C
Thermal Shock	MIL-STD-750, M-1056 10 cycles; 0°C to 100°C; 5-min dwell time at each temperature; 10 sec (max) transfer time between temperature
Autoclave	EIA / JEDEC, JESD22-A102 168 hours (121°C at 2 ATMs) and 100% R/H
Resistance to Solder Heat	MIL-STD-750 Method 2031
Solderability	ANSI/J-STD-002, category 3, Test A
Lead Bend	MIL-STD-750, M-2036 Cond E

Dimensions — TO-220AB (R-Package) — Non-Isolated Mounting Tab Common with Center Lead

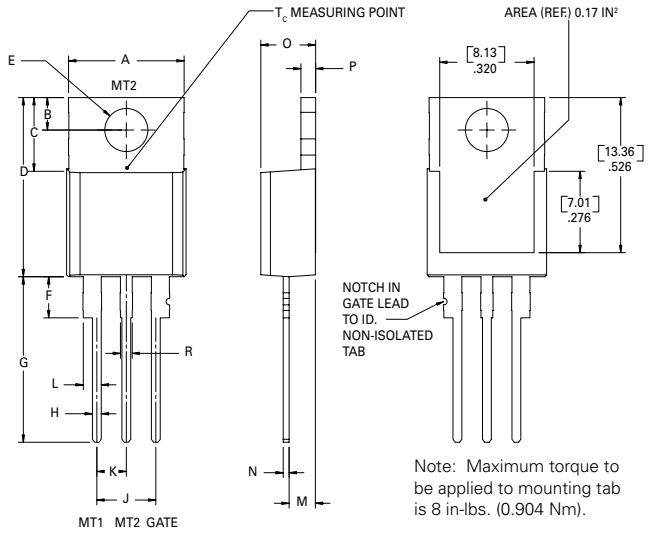

Note: Maximum torque to be applied to mounting tab is 8 in-lbs. (0.904 Nm).

Dimension	Inches		Millimeters	
	Min	Max	Min	Max
A	0.380	0.420	9.65	10.67
B	0.105	0.115	2.66	2.92
C	0.230	0.250	5.84	6.35
D	0.590	0.620	14.99	15.75
E	0.142	0.147	3.61	3.73
F	0.110	0.130	2.79	3.30
G	0.540	0.575	13.72	14.61
H	0.025	0.035	0.64	0.89
J	0.195	0.205	4.95	5.21
K	0.095	0.105	2.41	2.67
L	0.060	0.075	1.52	1.91
M	0.085	0.095	2.16	2.41
N	0.018	0.024	0.46	0.61
O	0.178	0.188	4.52	4.78
P	0.045	0.060	1.14	1.52
R	0.038	0.048	0.97	1.22

©2010 Littelfuse, Inc
Specifications are subject to change without notice.
Please refer to http://www.littelfuse.com for current information.

Dimensions — TO-220AB (L-Package) — Isolated Mounting Tab

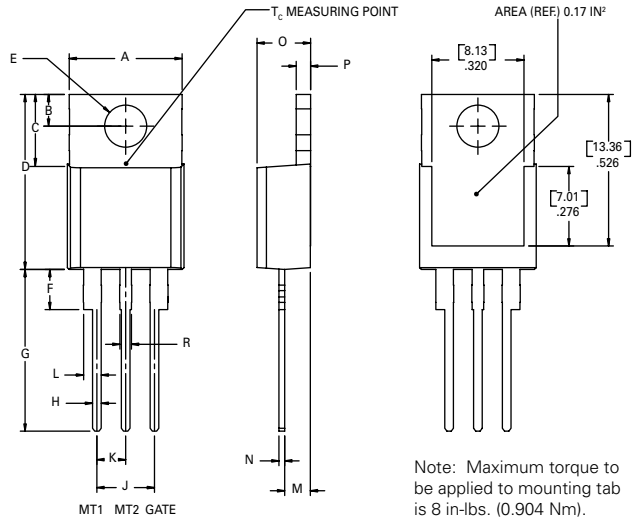

Note: Maximum torque to be applied to mounting tab is 8 in-lbs. (0.904 Nm).

Dimension	Inches		Millimeters	
	Min	Max	Min	Max
A	0.380	0.420	9.65	10.67
B	0.105	0.115	2.67	2.92
C	0.230	0.250	5.84	6.35
D	0.590	0.620	14.99	15.75
E	0.142	0.147	3.61	3.73
F	0.110	0.130	2.79	3.30
G	0.540	0.575	13.72	14.60
H	0.025	0.035	0.64	0.89
J	0.195	0.205	4.95	5.21
K	0.095	0.105	2.41	2.67
L	0.060	0.075	1.52	1.91
M	0.085	0.095	2.16	2.41
N	0.018	0.024	0.46	0.61
O	0.178	0.188	4.52	4.78
P	0.045	0.060	1.14	1.52
R	0.038	0.048	0.97	1.22

Dimensions — TO-263AB (N-Package) — D²Pak Surface Mount

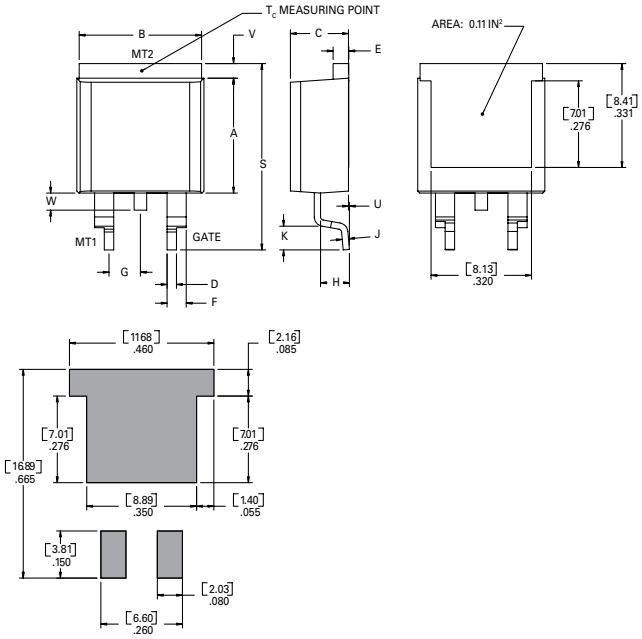

Dimension	Inches		Millimeters	
	Min	Max	Min	Max
A	0.360	0.370	9.14	9.40
B	0.380	0.420	9.65	10.67
C	0.178	0.188	4.52	4.78
D	0.025	0.035	0.64	0.89
E	0.045	0.060	1.14	1.52
F	0.060	0.075	1.52	1.91
G	0.095	0.105	2.41	2.67
H	0.092	0.102	2.34	2.59
J	0.018	0.024	0.46	0.61
K	0.090	0.110	2.29	2.79
S	0.590	0.625	14.99	15.88
V	0.035	0.045	0.89	1.14
U	0.002	0.010	0.05	0.25
W	0.040	0.070	1.02	1.78

©2010 Littelfuse, Inc
Specifications are subject to change without notice.
Please refer to http://www.littelfuse.com for current information.

Product Selector

Part Number	Voltage				Gate Sensitivity Quadrants	Type	Package
	400V	600V	800V	1000V	I – II – III		
Qxx15L5	X	X	X	X	50 mA	Standard Triac	TO-220L
Qxx15R5	X	X	X	X	50 mA	Standard Triac	TO-220R
Qxx15N5	X	X	X	X	50 mA	Standard Triac	TO-263 D²-PAK
Qxx16LH2	X	X	X	X	10 mA	Alternistor Triac	TO-220L
Qxx16RH2	X	X	X	X	10 mA	Alternistor Triac	TO-220R
Qxx16NH2	X	X	X	X	10 mA	Alternistor Triac	TO-263 D²-PAK
Qxx16LH3	X	X	X	X	20 mA	Alternistor Triac	TO-220L
Qxx16RH3	X	X	X	X	20 mA	Alternistor Triac	TO-220R
Qxx16NH3	X	X	X	X	20 mA	Alternistor Triac	TO-263 D²-PAK
Qxx16LH4	X	X	X	X	35 mA	Alternistor Triac	TO-220L
Qxx16RH4	X	X	X	X	35 mA	Alternistor Triac	TO-220R
Qxx16NH4	X	X	X	X	35 mA	Alternistor Triac	TO-263 D²-PAK
Qxx16LH6	X	X	X	X	80 mA	Alternistor Triac	TO-220L
Qxx16RH6	X	X	X	X	80 mA	Alternistor Triac	TO-220R
Qxx16NH6	X	X	X	X	80 mA	Alternistor Triac	TO-263 D²-PAK

Packing Options

Part Number	Marking	Weight	Packing Mode	Base Quantity
Qxx15L/Ry	Qxx15L/Ry	2.2 g	Bulk	500
Qxx15L/RyTP	Qxx15L/Ry	2.2 g	Tube Pack	500 (50 per tube)
Qxx15NyTP	Qxx15Ny	1.6 g	Tube	500 (50 per tube)
Qxx15NyRP	Qxx15Ny	1.6 g	Embossed Carrier	500
Qxx16L/RHy	Qxx16L/RHy	2.2 g	Bulk	500
Qxx16L/RHyTP	Qxx16L/RHy	2.2 g	Tube Pack	500 (50 per tube)
Qxx16NHyTP	Qxx16NHy	1.6 g	Tube	500 (50 per tube)
Qxx16NHyRP	Qxx16NHy	1.6 g	Embossed Carrier	500

Note: xx = Voltage; y = Sensitivity

©2010 Littelfuse, Inc
Specifications are subject to change without notice.
Please refer to http://www.littelfuse.com for current information.

TO-263 Embossed Carrier Reel Pack (RP)

Meets all EIA-481-2 Standards

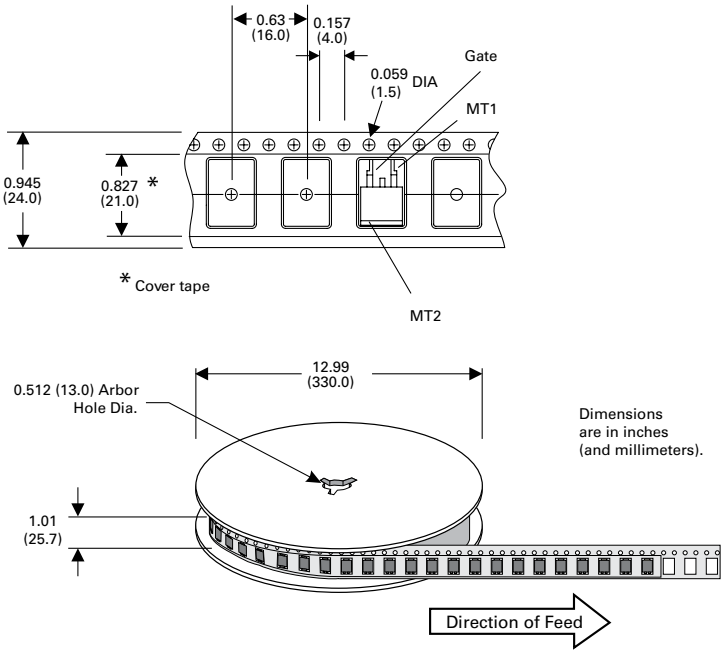

Part Numbering System

Q 60 16 L H4 56

DEVICE TYPE
Q: Triac or Alternistor

VOLTAGE RATING
40: 400V
60: 600V
80: 800V
K0: 1000V

CURRENT RATING
15: 15A
16: 16A

PACKAGE TYPE
L: TO-220 Isolated
R: TO-220 Non-Isolated
N: TO-263 (D^2-Pak)

SENSITIVITY & TYPE
Standard Triac
5: 50mA (QI, II, III)
Alternistor Triac
H2: 10mA (QI, II, III)
H3: 20mA (QI, II, III)
H4: 35mA (QI, II, III)
H6: 80mA (QI, II, III)

LEAD FORM DIMENSIONS
xx: Lead Form Option

Part Marking System

TO-220 AB – (R Package)
TO-263 AB – (N Package)

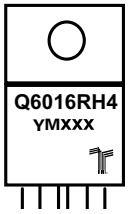

©2010 Littelfuse, Inc
Specifications are subject to change without notice.
Please refer to http://www.littelfuse.com for current information.

OCEAN CHIPS
Океан Электроники
Поставка электронных компонентов

Компания «Океан Электроники» предлагает заключение долгосрочных отношений при поставках импортных электронных компонентов на взаимовыгодных условиях!

Наши преимущества:

- Поставка оригинальных импортных электронных компонентов напрямую с производств Америки, Европы и Азии, а так же с крупнейших складов мира;
- Широкая линейка поставок активных и пассивных импортных электронных компонентов (более 30 млн. наименований);
- Поставка сложных, дефицитных, либо снятых с производства позиций;
- Оперативные сроки поставки под заказ (от 5 рабочих дней);
- Экспресс доставка в любую точку России;
- Помощь Конструкторского Отдела и консультации квалифицированных инженеров;
- Техническая поддержка проекта, помощь в подборе аналогов, поставка прототипов;
- Поставка электронных компонентов под контролем ВП;
- Система менеджмента качества сертифицирована по Международному стандарту ISO 9001;
- При необходимости вся продукция военного и аэрокосмического назначения проходит испытания и сертификацию в лаборатории (по согласованию с заказчиком);
- Поставка специализированных компонентов военного и аэрокосмического уровня качества (Xilinx, Altera, Analog Devices, Intersil, Interpoint, Microsemi, Actel, Aeroflex, Peregrine, VPT, Syfer, Eurofarad, Texas Instruments, MS Kennedy, Miteq, Cobham, E2V, MA-COM, Hittite, Mini-Circuits, General Dynamics и др.);

Компания «Океан Электроники» является официальным дистрибьютором и эксклюзивным представителем в России одного из крупнейших производителей разъемов военного и аэрокосмического назначения **«JONHON»**, а так же официальным дистрибьютором и эксклюзивным представителем в России производителя высокотехнологичных и надежных решений для передачи СВЧ сигналов **«FORSTAR»**.

AVIC JONHON

«JONHON» (основан в 1970 г.)

Разъемы специального, военного и аэрокосмического назначения:

(Применяются в военной, авиационной, аэрокосмической, морской, железнодорожной, горно- и нефтедобывающей отраслях промышленности)

«FORSTAR» (основан в 1998 г.)

ВЧ соединители, коаксиальные кабели, кабельные сборки и микроволновые компоненты:

(Применяются в телекоммуникациях гражданского и специального назначения, в средствах связи, РЛС, а так же военной, авиационной и аэрокосмической отраслях промышленности).

FORSTAR®

Телефон: 8 (812) 309-75-97 (многоканальный)
Факс: 8 (812) 320-03-32
Электронная почта: ocean@oceanchips.ru
Web: http://oceanchips.ru/
Адрес: 198099, г. Санкт-Петербург, ул. Калинина, д. 2, корп. 4, лит. А