COSEL AC-DC Power Supplies Bus Converter・Power Module Type

TUNS50F

Ordering information

TUN	S	50	F	05	-□
①	②	③	④	⑤	⑥

＊Providing heat sink as option

①Series name
②Single output
③Output wattage
④Universal Input
⑤Output voltage
⑥Optional
T : with Mounting hole (φ3.4 thru)

＊Avoid short circuit between +BC and -BC. It may cause the failure of inside components.
＊Keep TRM open, if output voltage adjustment is not necessary.

MODEL	TUNS50F05	TUNS50F12	TUNS50F24
MAX OUTPUT WATTAGE[W]	50.0	50.4	50.4
DC OUTPUT	5V 10A	12V 4.2A	24V 2.1A

SPECIFICATIONS

	MODEL		TUNS50F05	TUNS50F12	TUNS50F24
INPUT	VOLTAGE[V]		AC85 - 264 1φ (Please refer to the instruction manual, 6.5 Derating)		
	CURRENT[A]	ACIN 100V	0.67typ (Io=100%)		
		ACIN 200V	0.35typ (Io=100%)		
	FREQUENCY[Hz]		50/60 (47 - 63)		
	EFFICIENCY[%]	ACIN 100V	79typ	83typ	84typ
		ACIN 200V	81typ	84typ	86typ
	POWER FACTOR (Io=100%)	ACIN 100V	0.95typ		
		ACIN 200V	0.90typ		
	INRUSH CURRENT		Limited by external components (Thermistor)		
	LEAKAGE CURRENT[mA]		0.75max (ACIN 240V 60Hz, Io=100%, According to IEC60950-1)		
OUTPUT	VOLTAGE[V]		5	12	24
	CURRENT[A]		10	4.2	2.1
	LINE REGULATION[mV]		10max	24max	48max
	LOAD REGULATION[mV]		10max	24max	48max
	RIPPLE[mVp-p]	0 to +100℃ ＊1	80max	120max	120max
		-40 to 0℃ ＊1	120max	150max	150max
		0 to 15% Load ＊1	200max	280max	380max
	RIPPLE NOISE[mVp-p]	0 to +100℃ ＊1	120max	150max	150max
		-40 to 0℃ ＊1	200max	200max	250max
		0 to 15% Load ＊1	280max	360max	460max
	TEMPERATURE REGULATION[mV]	0 to +65℃	50max	120max	240max
		-40 to +100℃	100max	240max	480max
	DRIFT[mV]	＊2	20max	40max	90max
	OUTPUT VOLTAGE ADJUSTMENT RANGE[V]		Fixed (TRM pin open), adjustable by external resistor or external signal		
			4.50 - 6.00	10.80 - 13.20	21.60 - 26.40
	OUTPUT VOLTAGE SETTING[V]		4.97 - 5.13	11.91 - 12.29	23.62 - 24.38
PROTECTION CIRCUIT AND OTHERS	OVERCURRENT PROTECTION		Works over 105% of rating and recovers automatically		
	OVERVOLTAGE PROTECTION[V]		6.30 - 7.00	13.90 - 16.35	27.60 - 32.40
	REMOTE SENSING		Not provided		
	REMOTE ON/OFF		Not provided		
ISOLATION	INPUT-OUTPUT		AC3,000V 1minute, Cutoff current = 10mA, DC500V 50MΩ min (20±15℃)		
	INPUT-FG		AC2,000V 1minute, Cutoff current = 10mA, DC500V 50MΩ min (20±15℃)		
	OUTPUT-FG		AC500V 1minute, Cutoff current = 100mA, DC500V 50MΩ min (20±15℃)		
ENVIRONMENT	OPERATING TEMP.,HUMID.AND ALTITUDE		-40 to +100℃ (On aluminum base plate), 20 - 95%RH (Non condensing) (Refer to DERATING CURVE), 3,000m (10,000 feet) max		
	STORAGE TEMP.,HUMID.AND ALTITUDE		-40 to +100℃, 20 - 95%RH (Non condensing), 9,000m (30,000 feet) max		
	VIBRATION		10 - 55Hz, 49.0m/s² (5G), 3minutes period, 60minutes each along X, Y and Z axis		
	IMPACT		196.1m/s² (20G), 11ms, once each along X, Y and Z axis		
SAFETY AND NOISE REGULATIONS	AGENCY APPROVALS		UL60950-1, C-UL (CSA60950-1), EN60950-1, EN50178		
	HARMONIC ATTENUATOR		Complies with IEC61000-3-2 (Class A) ＊3		
OTHERS	CASE SIZE/WEIGHT		58.4×12.7×37.3mm [2.3×0.5×1.47 inches] (W×H×D) / 80g max		
	COOLING METHOD		Conduction cooling (e.g. heat radiation from the aluminum base plate to the attached heat sink)		

＊1 Refer to instruction manual for measuring method of electric characteristics.
＊2 Drift is the change in DC output for an eight hour period after a half-hour warm-up at 25℃, with the input voltage held constant at the rated input/output.
＊3 Please contact us about another class.

External view

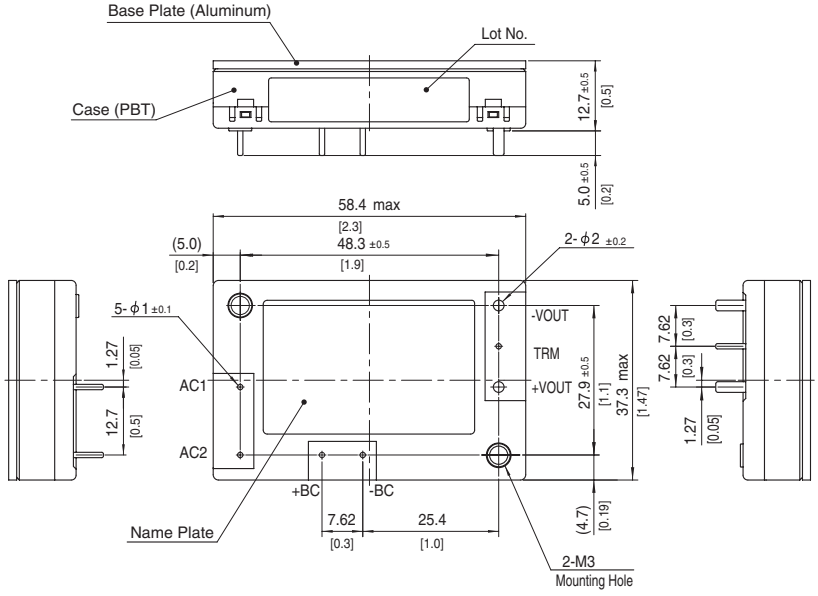

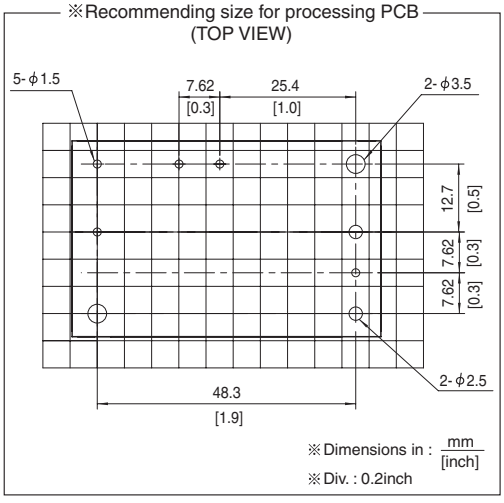

※ Tolerance : ±0.3 [±0.012]
※ Weight : 80g max
※ Dimensions in mm, [ ]=inches
※ Mounting hole screwing torque : 0.49N・m (5.0kgf・cm) max

TUNS

COSEL AC-DC Power Supplies Bus Converter·Power Module Type

TUNS100F

Ordering information

TUN	S	100	F	05	-□
①	②	③	④	⑤	⑥

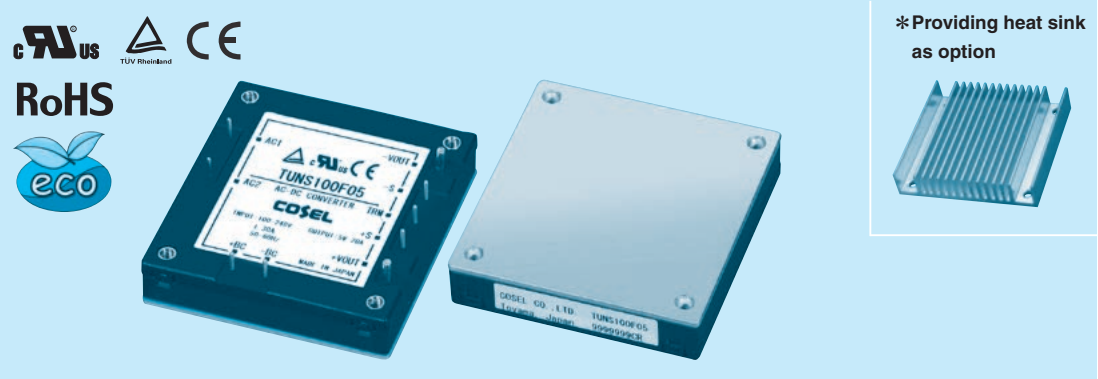

＊Providing heat sink as option

①Series name
②Single output
③Output wattage
④Universal Input
⑤Output voltage
⑥Optional
T : with Mounting hole (φ3.4 thru)

＊Avoid short circuit between +BC and -BC. It may cause the failure of inside components.
＊Keep TRM open, if output voltage adjustment is not necessary.
＊If remote sensing is not necessary, connect between +Vout & +S and between -Vout & -S.

MODEL	TUNS100F05	TUNS100F12	TUNS100F24
MAX OUTPUT WATTAGE[W]	100.0	100.8	100.8
DC OUTPUT	5V 20A	12V 8.4A	24V 4.2A

SPECIFICATIONS

	MODEL		TUNS100F05	TUNS100F12	TUNS100F24
INPUT	VOLTAGE[V]		AC85 - 264 1φ (Please refer to the instruction manual, 6.5 Derating)		
	CURRENT[A]	ACIN 100V	1.3typ (Io=100%)		
		ACIN 200V	0.7typ (Io=100%)		
	FREQUENCY[Hz]		50/60 (47 - 63)		
	EFFICIENCY[%]	ACIN 100V	82typ	83typ	84typ
		ACIN 200V	85typ	85typ	86typ
	POWER FACTOR (Io=100%)	ACIN 100V	0.95typ		
		ACIN 200V	0.90typ		
	INRUSH CURRENT		Limited by external components (Thermistor)		
	LEAKAGE CURRENT[mA]		0.75max (ACIN 240V 60Hz, Io=100%, According to IEC60950-1)		
OUTPUT	VOLTAGE[V]		5	12	24
	CURRENT[A]		20	8.4	4.2
	LINE REGULATION[mV]		10max	24max	48max
	LOAD REGULATION[mV]		10max	24max	48max
	RIPPLE[mVp-p]	0 to +100℃ ＊1	80max	120max	120max
		-40 to 0℃ ＊1	120max	150max	150max
		0 to 15% Load ＊1	160max	240max	240max
	RIPPLE NOISE[mVp-p]	0 to +100℃ ＊1	120max	150max	150max
		-40 to 0℃ ＊1	200max	200max	250max
		0 to 15% Load ＊1	240max	300max	300max
	TEMPERATURE REGULATION[mV]	0 to +65℃	50max	120max	240max
		-40 to +100℃	100max	240max	480max
	DRIFT[mV]	＊2	20max	40max	90max
	OUTPUT VOLTAGE ADJUSTMENT RANGE[V]		Fixed (TRM pin open), adjustable by external resistor or external signal		
			4.50 - 6.00	10.80 - 13.20	21.60 - 26.40
	OUTPUT VOLTAGE SETTING[V]		4.97 - 5.13	11.91 - 12.29	23.62 - 24.38
PROTECTION CIRCUIT AND OTHERS	OVERCURRENT PROTECTION		Works over 105% of rating and recovers automatically		
	OVERVOLTAGE PROTECTION[V]		6.30 - 7.00	13.90 - 16.35	27.60 - 32.40
	REMOTE SENSING		Provided		
	REMOTE ON/OFF		Not provided		
ISOLATION	INPUT-OUTPUT		AC3,000V 1minute, Cutoff current = 10mA, DC500V 50MΩ min (20±15℃)		
	INPUT-FG		AC2,000V 1minute, Cutoff current = 10mA, DC500V 50MΩ min (20±15℃)		
	OUTPUT-FG		AC500V 1minute, Cutoff current = 100mA, DC500V 50MΩ min (20±15℃)		
ENVIRONMENT	OPERATING TEMP.,HUMID.AND ALTITUDE		-40 to +100℃ (On aluminum base plate), 20 - 95%RH (Non condensing) (Refer to DERATING CURVE), 3,000m (10,000 feet) max		
	STORAGE TEMP.,HUMID.AND ALTITUDE		-40 to +100℃, 20 - 95%RH (Non condensing), 9,000m (30,000 feet) max		
	VIBRATION		10 - 55Hz, 49.0m/s² (5G), 3minutes period, 60minutes each along X, Y and Z axis		
	IMPACT		196.1m/s² (20G), 11ms, once each along X, Y and Z axis		
SAFETY AND NOISE REGULATIONS	AGENCY APPROVALS		UL60950-1, C-UL (CSA60950-1), EN60950-1, EN50178		
	HARMONIC ATTENUATOR		Complies with IEC61000-3-2 (Class A) ＊3		
OTHERS	CASE SIZE/WEIGHT		58.4×12.7×61.0mm [2.3×0.5×2.4 inches] (W×H×D) / 120g max		
	COOLING METHOD		Conduction cooling (e.g. heat radiation from the aluminum base plate to the attached heat sink)		

＊1 Refer to instruction manual for measuring method of electric characteristics.
＊2 Drift is the change in DC output for an eight hour period after a half-hour warm-up at 25℃, with the input voltage held constant at the rated input/output.
＊3 Please contact us about another class.

External view

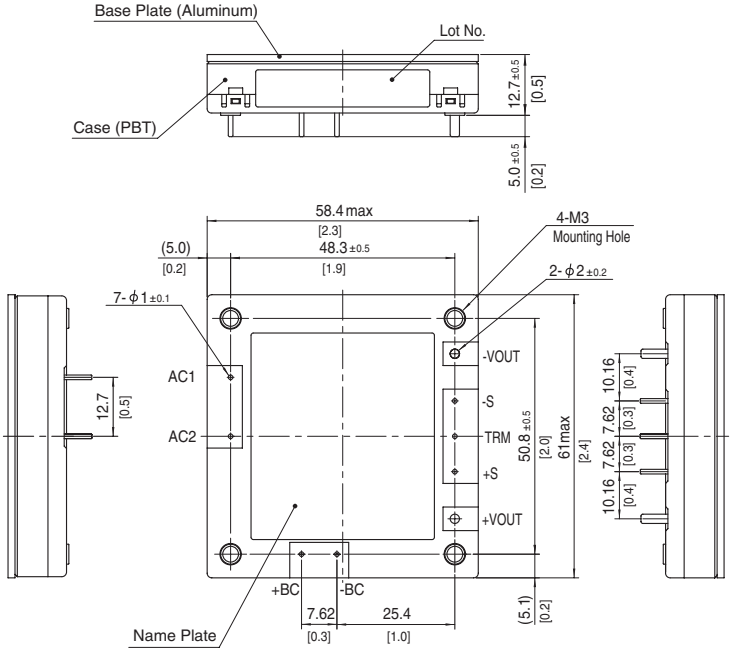

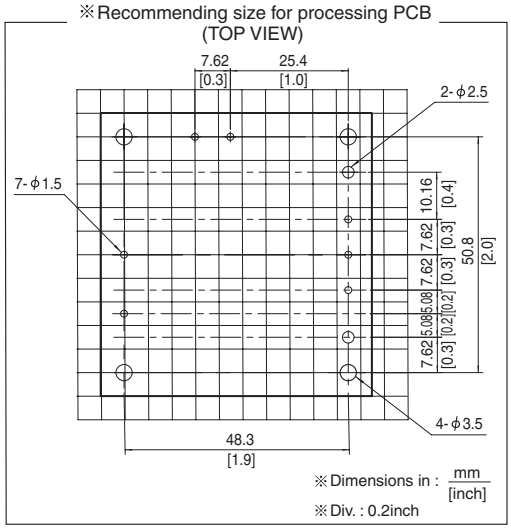

※Tolerance : ±0.3 [±0.012]
※Weight : 120g max
※Dimensions in mm, [ ]=inches
※Mounting hole screwing torque : 0.49N・m (5.0kgf・cm) max

TUNS

COSEL AC-DC Power Supplies Bus Converter·Power Module Type

TUNS300F

Ordering information

TUN	S	300	F	48	-□
①	②	③	④	⑤	⑥

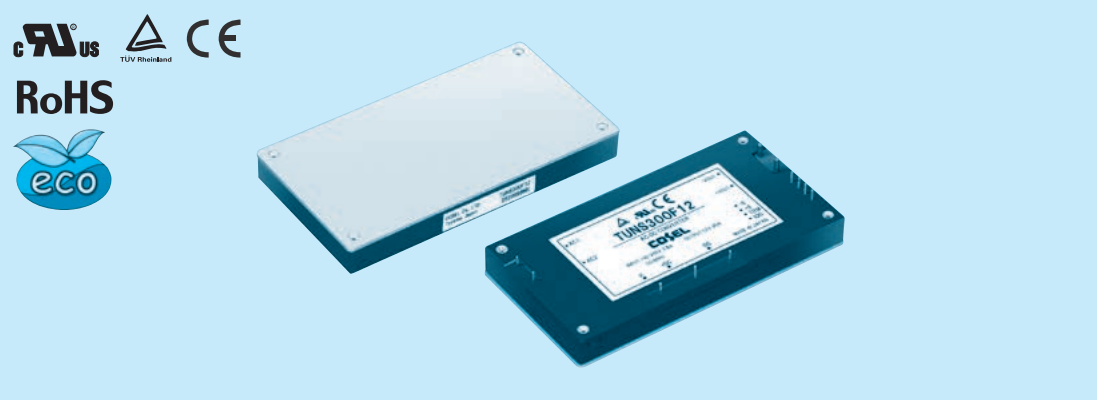

①Series name
②Single output
③Output wattage
④Universal Input
⑤Output voltage
⑥Optional
T : with Mounting hole (φ3.4 thru)
Y1: Outputvoltage adjustment range ±20% (Only 48V)
R1: with Remote ON/OFF
R2: with Remote ON/OFF (Low standby power)

*Avoid short circuit between +BC/R and -BC. It may cause the failure of inside components.
*Keep TRM open, if output voltage adjustment is not necessary.
*If remote sensing is not necessary, connect between +Vout & +S and between -Vout & -S.

MODEL	TUNS300F12	TUNS300F28	TUNS300F48
MAX OUTPUT WATTAGE[W]	300	308	312
DC OUTPUT	12V 25A	28V 11A	48V 6.5A

SPECIFICATIONS

	MODEL		TUNS300F12	TUNS300F28	TUNS300F48
INPUT	VOLTAGE[V]		AC85 - 264 1φ		
	CURRENT[A]	ACIN 100V	3.6typ (Io=100%)		
		ACIN 200V	1.8typ (Io=100%)		
	FREQUENCY[Hz]		50/60 (47 - 63)		
	EFFICIENCY[%]	ACIN 100V	84typ	87typ	87typ
		ACIN 200V	86typ	89typ	90typ
	POWER FACTOR (Io=100%)	ACIN 100V	0.96typ		
		ACIN 200V	0.93typ		
	INRUSH CURRENT		Limited by external resistance		
	LEAKAGE CURRENT[mA]		0.75max (ACIN 240V 60Hz, Io=100%, According to IEC60950-1)		
OUTPUT	VOLTAGE[V]		12	28	48
	CURRENT[A]		25	11	6.5
	LINE REGULATION[mV]		24max	56max	96max
	LOAD REGULATION[mV]		24max	56max	96max
	RIPPLE[mVp-p]	0 to +100℃ *1	120max	180max	250max
		-40 to 0℃ *1	150max	200max	300max
	RIPPLE NOISE[mVp-p]	0 to +100℃ *1	150max	200max	300max
		-40 to 0℃ *1	200max	300max	450max
	TEMPERATURE REGULATION[mV]	0 to +65℃	120max	280max	480max
		-40 to +100℃	240max	560max	960max
	DRIFT[mV]	*2	40max	90max	180max
	OUTPUT VOLTAGE ADJUSTMENT RANGE[V]		Fixed (TRM pin open), adjustable by external resistor or external signal		
			9.60 - 14.40	22.40 - 33.60	38.40 - 52.80 (-Y1 Option : 38.4 - 57.6)
	OUTPUT VOLTAGE SETTING[V]		11.91 - 12.29	27.56 - 28.44	47.24 - 48.76
PROTECTION CIRCUIT AND OTHERS	OVERCURRENT PROTECTION		Works over 105% of rating and recovers automatically		
	OVERVOLTAGE PROTECTION[V]		15.00 - 16.80	35.00 - 39.20	55.20 - 64.80 (-Y1 Option : 60.0 - 67.2)
	REMOTE SENSING		Provided		
	REMOTE ON/OFF		Optional (External power supply is required)		
ISOLATION	INPUT-OUTPUT · RC	*4	AC3,000V 1minute, Cutoff current = 10mA, DC500V 50MΩ min (20±15℃)		
	INPUT-FG		AC2,000V 1minute, Cutoff current = 10mA, DC500V 50MΩ min (20±15℃)		
	OUTPUT · RC-FG	*4	AC500V 1minute, Cutoff current = 100mA, DC500V 50MΩ min (20±15℃)		
	OUTPUT-RC	*4	AC100V 1minute, Cutoff current = 100mA, DC100V 10MΩ min (20±15℃)		
ENVIRONMENT	OPERATING TEMP.,HUMID.AND ALTITUDE		-40 to +100℃ (On aluminum base plate), 20 - 95%RH (Non condensing) (Refer to DERATING CURVE), 3,000m (10,000 feet) max		
	STORAGE TEMP.,HUMID.AND ALTITUDE		-40 to +100℃, 20 - 95%RH (Non condensing), 9,000m (30,000 feet) max		
	VIBRATION		10 - 55Hz, 49.0m/s² (5G), 3minutes period, 60minutes each along X, Y and Z axis		
	IMPACT		196.1m/s² (20G), 11ms, once each along X, Y and Z axis		
SAFETY AND NOISE REGULATIONS	AGENCY APPROVALS		UL60950-1, C-UL (CSA60950-1), EN60950-1		
	HARMONIC ATTENUATOR		Complies with IEC61000-3-2 (Class A) *3		
OTHERS	CASE SIZE/WEIGHT		117.3×12.7×61.5mm [4.62×0.5×2.42 inches] (W×H×D) / 190g max		
	COOLING METHOD		Conduction cooling (e.g. heat radiation from the aluminum base plate to the attached heat sink)		

*1 Refer to instruction manual for measuring method of electric characteristics.
*2 Drift is the change in DC output for an eight hour period after a half-hour warm-up at 25℃, with the input voltage held constant at the rated input/output.
*3 Please contact us about another class.
*4 "RC" is applicable when remote control (optional) is added.

External view

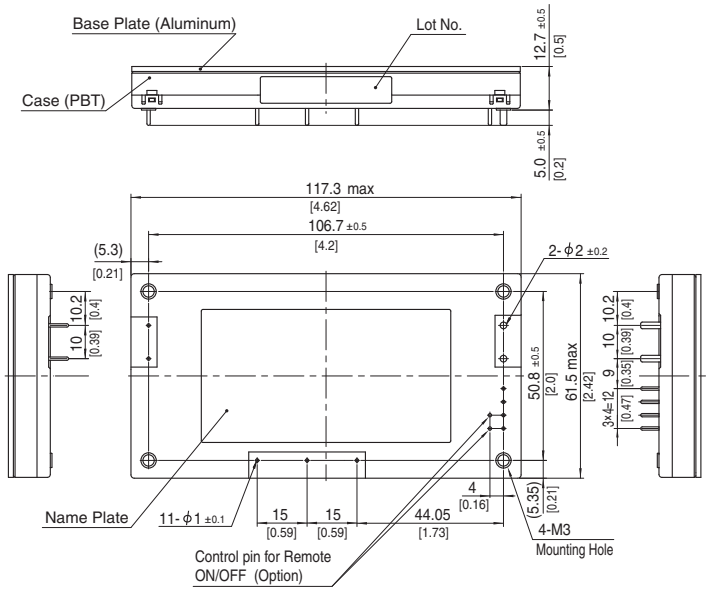

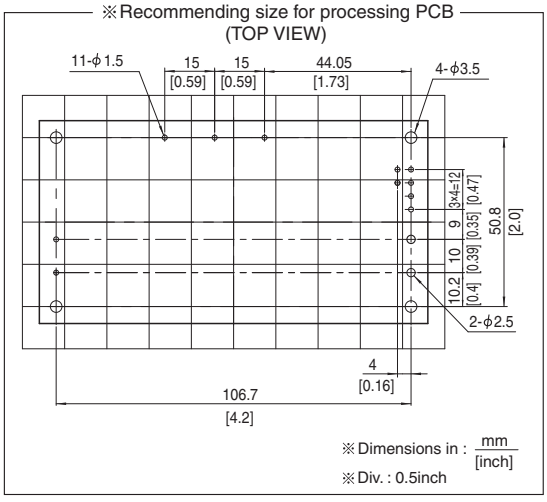

※Tolerance : ±0.3 [±0.012]
※Weight : 190g max
※Dimensions in mm, [ ]=inches
※Mounting hole screwing torque : 0.49N・m (5.0kgf・cm) max

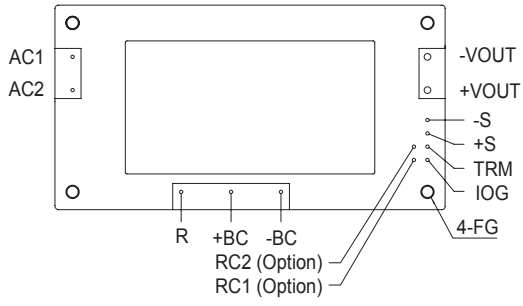

COSEL AC-DC Power Supplies Bus Converter·Power Module Type

TUNS500F

Ordering information

TUN	S	500	F	48	-□
①	②	③	④	⑤	⑥

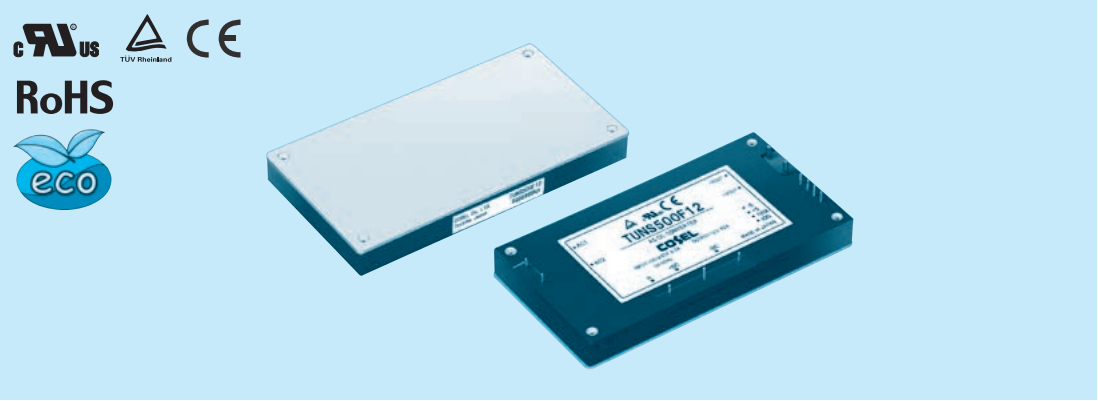

①Series name
②Single output
③Output wattage
④Universal Input
⑤Output voltage
⑥Optional
T : with Mounting hole (φ3.4 thru)
Y1: Outputvoltage adjustment range ±20% (Only 48V)
R1: with Remote ON/OFF
R2: with Remote ON/OFF (Low standby power)

*Avoid short circuit between +BC/R and -BC. It may cause the failure of inside components.
*Keep TRM open, if output voltage adjustment is not necessary.
*If remote sensing is not necessary, connect between +Vout & +S and between -Vout & -S.

MODEL	TUNS500F12	TUNS500F28	TUNS500F48
MAX OUTPUT WATTAGE[W]	504	504	504
DC OUTPUT	12V 42A (Peak 55A)	28V 18A (Peak 24A)	48V 10.5A (Peak 14A)

SPECIFICATIONS

	MODEL		TUNS500F12	TUNS500F28	TUNS500F48
INPUT	VOLTAGE[V]		AC85 - 264 1φ		
	CURRENT[A]	ACIN 100V	6.0typ (Io=100%)		
		ACIN 200V	3.0typ (Io=100%)		
	FREQUENCY[Hz]		50/60 (47 - 63)		
	EFFICIENCY[%]	ACIN 100V	84typ	87typ	88typ
		ACIN 200V	86typ	90typ	90.5typ
	POWER FACTOR (Io=100%)	ACIN 100V	0.96typ		
		ACIN 200V	0.93typ		
	INRUSH CURRENT		Limited by external resistance		
	LEAKAGE CURRENT[mA]		0.75max (ACIN 240V 60Hz, Io=100%, According to IEC60950-1)		
OUTPUT	VOLTAGE[V]		12	28	48
	CURRENT[A]	*3	42 (Peak 55)	18 (Peak 24)	10.5 (Peak 14)
	LINE REGULATION[mV]		24max	56max	96max
	LOAD REGULATION[mV]		24max	56max	96max
	RIPPLE[mVp-p]	0 to +100℃ *1	120max	180max	250max
		-40 to 0℃ *1	150max	200max	300max
	RIPPLE NOISE[mVp-p]	0 to +100℃ *1	150max	200max	300max
		-40 to 0℃ *1	200max	300max	450max
	TEMPERATURE REGULATION[mV]	0 to +65℃	120max	280max	480max
		-40 to +100℃	240max	560max	960max
	DRIFT[mV]	*2	40max	90max	180max
	OUTPUT VOLTAGE ADJUSTMENT RANGE[V]		Fixed (TRM pin open), adjustable by external resistor or external signal		
			9.60 - 14.40	22.40 - 33.60	38.40 - 52.80 (-Y1 Option : 38.4 - 57.6)
	OUTPUT VOLTAGE SETTING[V]		11.91 - 12.29	27.56 - 28.44	47.24 - 48.76
PROTECTION CIRCUIT AND OTHERS	OVERCURRENT PROTECTION		Works over 101% of peak current and recovers automatically		
	OVERVOLTAGE PROTECTION[V]		15.00 - 16.80	35.00 - 39.20	55.20 - 64.80 (-Y1 Option : 60.0 - 67.2)
	REMOTE SENSING		Provided		
	REMOTE ON/OFF		Optional (External power supply is required)		
ISOLATION	INPUT-OUTPUT · RC	*5	AC3,000V 1minute, Cutoff current = 10mA, DC500V 50MΩ min (20±15℃)		
	INPUT-FG		AC2,000V 1minute, Cutoff current = 10mA, DC500V 50MΩ min (20±15℃)		
	OUTPUT · RC-FG	*5	AC500V 1minute, Cutoff current = 100mA, DC500V 50MΩ min (20±15℃)		
	OUTPUT-RC	*5	AC100V 1minute, Cutoff current = 100mA, DC100V 10MΩ min (20±15℃)		
ENVIRONMENT	OPERATING TEMP.,HUMID.AND ALTITUDE		-40 to +100℃ (On aluminum base plate), 20 - 95%RH (Non condensing) (Refer to DERATING CURVE), 3,000m (10,000 feet) max		
	STORAGE TEMP.,HUMID.AND ALTITUDE		-40 to +100℃, 20 - 95%RH (Non condensing), 9,000m (30,000 feet) max		
	VIBRATION		10 - 55Hz, 49.0m/s² (5G), 3minutes period, 60minutes each along X, Y and Z axis		
	IMPACT		196.1m/s² (20G), 11ms, once each along X, Y and Z axis		
SAFETY AND NOISE REGULATIONS	AGENCY APPROVALS		UL60950-1, C-UL (CSA60950-1), EN60950-1		
	HARMONIC ATTENUATOR		Complies with IEC61000-3-2 (Class A) *4		
OTHERS	CASE SIZE/WEIGHT		117.3×12.7×61.5mm [4.62×0.5×2.42 inches] (W×H×D) / 190g max		
	COOLING METHOD		Conduction cooling (e.g. heat radiation from the aluminum base plate to the attached heat sink)		

*1 Refer to instruction manual for measuring method of electric characteristics.
*2 Drift is the change in DC output for an eight hour period after a half-hour warm-up at 25℃, with the input voltage held constant at the rated input/output.
*3 ( ) means peak current. Avoid operating with peak current continuously. It may cause failure of the components inside the product.
There are limitation of available condition of the peak current, such as peak time, duty etc. (Refer to the instruction manual in detail.)
*4 Please contact us about another class.
*5 "RC" is applicable when remote control (optional) is added.

External view

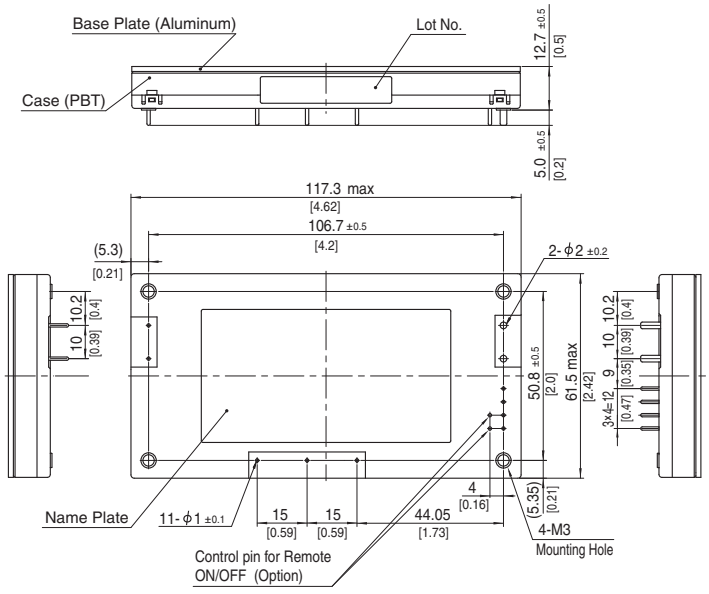

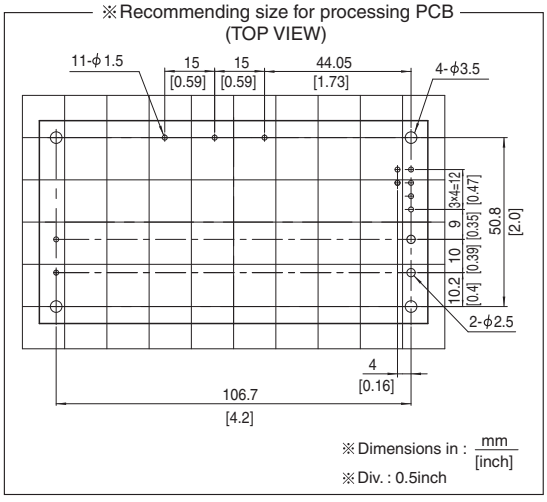

※Tolerance : ±0.3 [±0.012]
※Weight : 190g max
※Dimensions in mm, [ ]=inches
※Mounting hole screwing torque : 0.49N・m (5.0kgf・cm) max

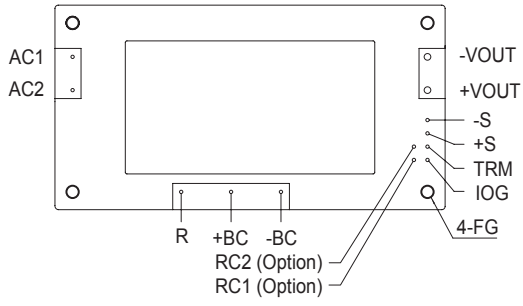

COSEL AC-DC Power Supplies Bus Converter·Power Module Type

TUNS700F

Ordering information

TUN	S	700	F	48	-□
①	②	③	④	⑤	⑥

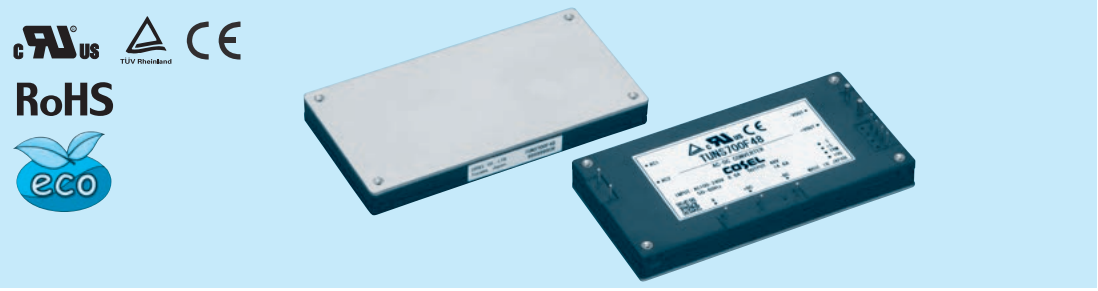

①Series name
②Single output
③Output wattage
④Universal Input
⑤Output voltage
⑥Optional
T : with Mounting hole (φ3.4 thru)
Y1: Outputvoltage adjustment range ±20% (Only 48V)
R1: with Remote ON/OFF
R2: with Remote ON/OFF (Low standby power)
P : Parallel operation (Output voltage variable, Remote sensing disabled)

*Avoid short circuit between +BC/R and -BC. It may cause the failure of inside components.
*Keep TRM open, if output voltage adjustment is not necessary.
*If remote sensing is not necessary, connect between +Vout & +S and between -Vout & -S.

MODEL	TUNS700F12	TUNS700F28	TUNS700F48
MAX OUTPUT WATTAGE[W]	700.8	700.0	700.8
DC OUTPUT	12V 58.4A	28V 25A	48V 14.6A

SPECIFICATIONS

	MODEL		TUNS700F12	TUNS700F28	TUNS700F48
INPUT	VOLTAGE[V]		AC85 - 264 1φ		
	CURRENT[A]	ACIN 100V	8.6typ (Io=100%)		
		ACIN 200V	4.1typ (Io=100%)		
	FREQUENCY[Hz]		50/60 (47 - 63)		
	EFFICIENCY[%]	ACIN 100V	83typ	86typ	87typ
		ACIN 200V	86typ	89typ	90typ
	POWER FACTOR (Io=100%)	ACIN 100V	0.96typ		
		ACIN 200V	0.93typ		
	INRUSH CURRENT		Limited by external resistance		
	LEAKAGE CURRENT[mA]		0.75max (ACIN 240V 60Hz, Io=100%, According to IEC60950-1)		
OUTPUT	VOLTAGE[V]		12	28	48
	CURRENT[A]		58.4	25	14.6
	LINE REGULATION[mV]		24max	56max	96max
	LOAD REGULATION[mV]		24max	56max	96max
	RIPPLE[mVp-p]	0 to +100℃ *1	120max	180max	250max
		-40 to 0℃ *1	150max	200max	300max
	RIPPLE NOISE[mVp-p]	0 to +100℃ *1	150max	200max	300max
		-40 to 0℃ *1	200max	300max	450max
	TEMPERATURE REGULATION[mV]	0 to +65℃	120max	280max	480max
		-40 to +100℃	240max	560max	960max
	DRIFT[mV]	*2	40max	90max	180max
	OUTPUT VOLTAGE ADJUSTMENT RANGE[V]		Fixed (TRM pin open), adjustable by external resistor or external signal		
			9.60 - 14.40	22.40 - 33.60	38.40 - 52.80 (-Y1 Option : 38.4 - 57.6)
	OUTPUT VOLTAGE SETTING[V]		11.91 - 12.29	27.56 - 28.44	47.24 - 48.76
PROTECTION CIRCUIT AND OTHERS	OVERCURRENT PROTECTION		Works over 105% of rating and recovers automatically		
	OVERVOLTAGE PROTECTION[V]		15.00 - 16.80	35.00 - 39.20	55.20 - 64.80 (-Y1 Option : 60.0 - 67.2)
	REMOTE SENSING		Provided		
	REMOTE ON/OFF		Optional (External power supply is required)		

TUNS

MODEL	TUNS700F12-P	TUNS700F28-P	TUNS700F48-P
MAX OUTPUT WATTAGE[W]	700.8	700.0	700.8
DC OUTPUT	12V 58.4A	28V 25A	48V 14.6A

SPECIFICATIONS

	MODEL		TUNS700F12-P	TUNS700F28-P	TUNS700F48-P
INPUT	VOLTAGE[V]		AC85 - 264 1φ		
	CURRENT[A]	ACIN 100V	8.6typ (Io=100%)		
		ACIN 200V	4.1typ (Io=100%)		
	FREQUENCY[Hz]		50/60 (47 - 63)		
	EFFICIENCY[%]	ACIN 100V	83typ	86typ	87typ
		ACIN 200V	86typ	89typ	90typ
	POWER FACTOR (Io=100%)	ACIN 100V	0.96typ		
		ACIN 200V	0.93typ		
	INRUSH CURRENT		Limited by external resistance		
	LEAKAGE CURRENT[mA]		0.75max (ACIN 240V 60Hz, Io=100%, According to IEC60950-1)		
OUTPUT	VOLTAGE[V]		12	28	48
	CURRENT[A]		58.4	25	14.6
	VOLTAGE ACCURACY[%]		+5, -3	+5, -3	+5, -3
	RIPPLE[mVp-p]	0 to +100℃ *1	240max	360max	600max
		-40 to 0℃ *1	300max	400max	700max
		0 to +30% Load *1	360max	540max	900max
	RIPPLE NOISE[mVp-p]	0 to +100℃ *1	300max	400max	700max
		-40 to 0℃ *1	400max	600max	1000max
		0 to +30% Load *1	450max	600max	1000max
PROTECTION CIRCUIT AND OTHERS	OVERCURRENT PROTECTION		Works over 105% of rating and recovers automatically		
	OVERVOLTAGE PROTECTION[V]		15.00 - 16.80	35.00 - 39.20	55.20 - 64.80
	REMOTE ON/OFF		Optional (External power supply is required)		

GENERAL SPECIFICATIONS

ISOLATION	INPUT-OUTPUT · RC *4	AC3,000V 1minute, Cutoff current = 10mA, DC500V 50MΩ min (20±15℃)
	INPUT-FG	AC2,000V 1minute, Cutoff current = 10mA, DC500V 50MΩ min (20±15℃)
	OUTPUT · RC-FG *4	AC500V 1minute, Cutoff current = 100mA, DC500V 50MΩ min (20±15℃)
	OUTPUT-RC *4	AC100V 1minute, Cutoff current = 100mA, DC100V 10MΩ min (20±15℃)
ENVIRONMENT	OPERATING TEMP.,HUMID.AND ALTITUDE	-40 to +100℃ (On aluminum base plate), 20 - 95%RH (Non condensing) (Refer to DERATING CURVE), 3,000m (10,000 feet) max
	STORAGE TEMP.,HUMID.AND ALTITUDE	-40 to +100℃, 20 - 95%RH (Non condensing), 9,000m (30,000 feet) max
	VIBRATION	10 - 55Hz, 49.0m/s² (5G), 3minutes period, 60minutes each along X, Y and Z axis
	IMPACT	196.1m/s² (20G), 11ms, once each along X, Y and Z axis
SAFETY AND NOISE REGULATIONS	AGENCY APPROVALS	UL60950-1, C-UL (CSA60950-1), EN60950-1
	HARMONIC ATTENUATOR	Complies with IEC61000-3-2 (Class A) *3
OTHERS	CASE SIZE/WEIGHT	117.3×12.7×61.5mm [4.62×0.5×2.42 inches] (W×H×D) / 190g max
	COOLING METHOD	Conduction cooling (e.g. heat radiation from the aluminum base plate to the attached heat sink)

*1 Refer to instruction manual for measuring method of electric characteristics.
*2 Drift is the change in DC output for an eight hour period after a half-hour warm-up at 25℃, with the input voltage held constant at the rated input/output.
*3 Please contact us about another class.
*4 "RC" is applicable when remote control (optional) is added.

External view

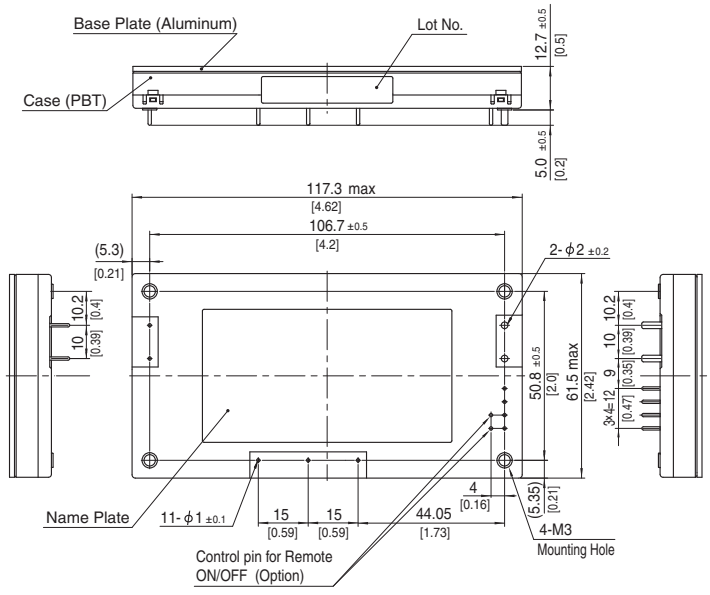

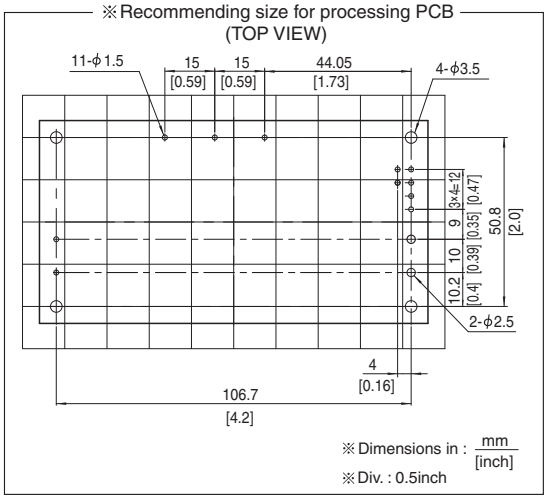

※Tolerance : ±0.3 [±0.012]
※Weight : 190g max
※Dimensions in mm, [ ]=inches
※Mounting hole screwing torque : 0.49N · m (5.0kgf · cm) max

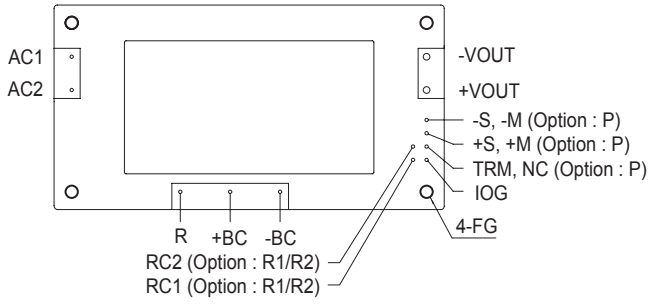

Mouser Electronics

Authorized Distributor

Click to View Pricing, Inventory, Delivery & Lifecycle Information:

Cosel:
TUNS100F05 TUNS50F05 TUNS100F24 TUNS50F24 TUNS50F12 TUNS100F12 TUNS500F12 TUNS300F48 TUNS500F48 TUNS500F28 TUNS300F12 TUNS300F28 TUNS700F12 TUNS700F48 TUNS700F28

OCEAN CHIPS
Океан Электроники
Поставка электронных компонентов

Компания «Океан Электроники» предлагает заключение долгосрочных отношений при поставках импортных электронных компонентов на взаимовыгодных условиях!

Наши преимущества:

- Поставка оригинальных импортных электронных компонентов напрямую с производств Америки, Европы и Азии, а так же с крупнейших складов мира;
- Широкая линейка поставок активных и пассивных импортных электронных компонентов (более 30 млн. наименований);
- Поставка сложных, дефицитных, либо снятых с производства позиций;
- Оперативные сроки поставки под заказ (от 5 рабочих дней);
- Экспресс доставка в любую точку России;
- Помощь Конструкторского Отдела и консультации квалифицированных инженеров;
- Техническая поддержка проекта, помощь в подборе аналогов, поставка прототипов;
- Поставка электронных компонентов под контролем ВП;
- Система менеджмента качества сертифицирована по Международному стандарту ISO 9001;
- При необходимости вся продукция военного и аэрокосмического назначения проходит испытания и сертификацию в лаборатории (по согласованию с заказчиком);
- Поставка специализированных компонентов военного и аэрокосмического уровня качества (Xilinx, Altera, Analog Devices, Intersil, Interpoint, Microsemi, Actel, Aeroflex, Peregrine, VPT, Syfer, Eurofarad, Texas Instruments, MS Kennedy, Miteq, Cobham, E2V, MA-COM, Hittite, Mini-Circuits, General Dynamics и др.);

Компания «Океан Электроники» является официальным дистрибьютором и эксклюзивным представителем в России одного из крупнейших производителей разъемов военного и аэрокосмического назначения **«JONHON»**, а так же официальным дистрибьютором и эксклюзивным представителем в России производителя высокотехнологичных и надежных решений для передачи СВЧ сигналов **«FORSTAR»**.

AVIC JONHON

«JONHON» (основан в 1970 г.)

Разъемы специального, военного и аэрокосмического назначения:

(Применяются в военной, авиационной, аэрокосмической, морской, железнодорожной, горно- и нефтедобывающей отраслях промышленности)

«FORSTAR» (основан в 1998 г.)

ВЧ соединители, коаксиальные кабели, кабельные сборки и микроволновые компоненты:

(Применяются в телекоммуникациях гражданского и специального назначения, в средствах связи, РЛС, а так же военной, авиационной и аэрокосмической отраслях промышленности).

FORSTAR®

Телефон: 8 (812) 309-75-97 (многоканальный)
Факс: 8 (812) 320-03-32
Электронная почта: ocean@oceanchips.ru
Web: http://oceanchips.ru/
Адрес: 198099, г. Санкт-Петербург, ул. Калинина, д. 2, корп. 4, лит. А