MIC2536

Dual USB Power Distribution Switch

Final Information

The Infinite Bandwidth Company™

General Description

The MIC2536 is a cost-effective high-side power switch, with two independently controlled channels, optimized for bus-powered Universal Serial Bus (USB) applications. Few external components are necessary to satisfy USB requirements.

Each switch channel of the MIC2536 will supply up to 100mA as required for USB bus-powered downstream devices. Fault current is limited to typically 275mA by fast-acting current-limit circuitry which minimizes voltage droop on the upstream port during fault conditions. A flag output with transient filter indicates fault conditions to the local USB controller but will ignore short flag signals resulting from inrush current during hot plug-in events.

Soft start eliminates the momentary voltage droop on other ports that may occur when the switch is enabled in bus-powered applications. Additional features include thermal shutdown to prevent catastrophic switch failure from high-current loads and 3.3V and 5V logic compatible enable inputs.

The MIC2536 is available in active-high and active-low versions in 8-lead SOP and MSOP.

Features

- Compliant to USB specifications
- 2.7V to 5.5V operating range
- 150mA minimum continuous load current per channel
- 400mΩ typical on-resistance
- Fast-acting short circuit protection with thermal shutdown
- Integrated filter eliminates false overcurrent flag assertions
- Individual open-drain fault flag pins with transient filter
- 3V/5V-compatible enable inputs
- Active-high (-1) and active-low (-2) versions
- Reverse-current blocking in off mode (no “body diode”)
- Soft-start circuit
- 100µA maximum on-state supply current
- <1µA typical off-state supply current
- –40°C to 85°C operation

Applications

- USB keyboard bus-powered hubs
- USB bus-powered docking stations
- Note Book PCs
- PDAs
- General purpose power distribution applications
- PC board hot swap
- Inrush current-limiting

Typical Application

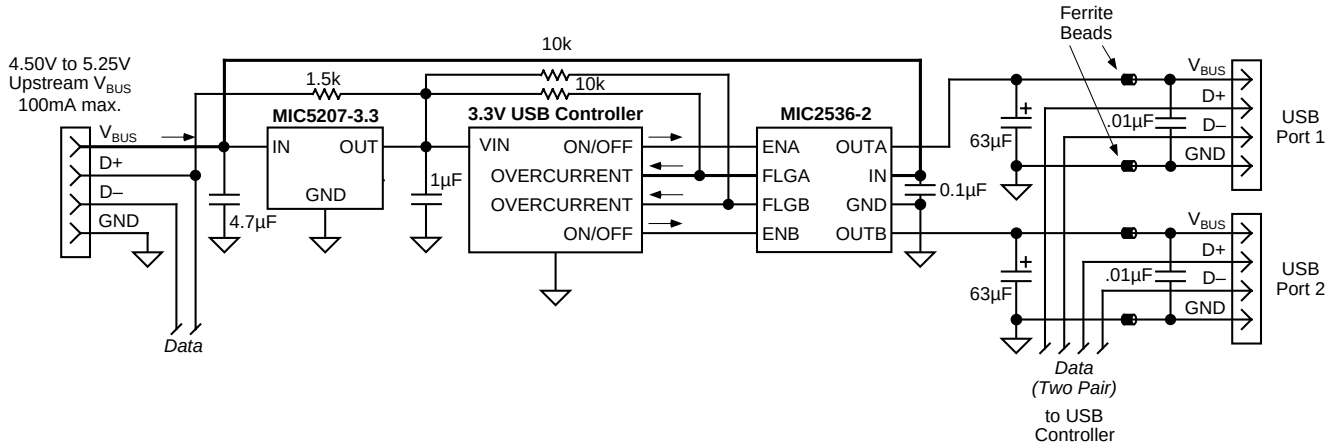

Typical Two-Port Bus-Powered Hub

UL Recognized Component

Micrel, Inc. • 1849 Fortune Drive • San Jose, CA 95131 • USA • tel + 1 (408) 944-0800 • fax + 1 (408) 944-0970 • http://www.micrel.com

Ordering Information

Part Number	Enable	Temperature Range	Package
MIC2536-1BM	Active High	–40°C to +85°C	8-Lead SOP
MIC2536-2BM	Active Low	–40°C to +85°C	8-Lead SOP
MIC2536-1BMM	Active High	–40°C to +85°C	8-Lead MSOP
MIC2536-2BMM	Active Low	–40°C to +85°C	8-Lead MSOP

Pin Configuration

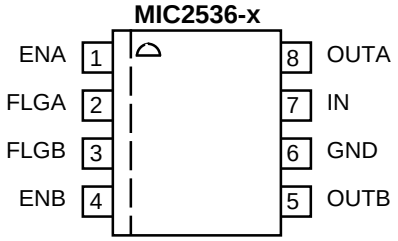

8-Lead SOP (M)
8-Lead MSOP (MM)

Pin Description

Pin Number	Pin Name	Pin Function
1	ENA	Enable A (Input): Channel A control input. Active high (–1) or active low (–2) input.
2	FLGA	Flag A: (Output): Channel A open-drain fault flag output. Indicates overcurrent or thermal shutdown conditions. Overcurrent conditions must last longer than t_D in order to assert FLG.
3	FLGB	Flag B (Output): Channel B open-drain fault flag output. Indicates overcurrent or thermal shutdown conditions. Overcurrent conditions must last longer than t_D in order to assert FLG.
4	ENB	Enable B (Input): Channel B control input. Active high (–1) or active low (–2) input.
5	OUTB	Output B: Channel B switch output.
6	GND	Ground
7	IN	Positive Switch and Logic Supply Input
8	OUTA	Output A: Channel A switch output.

Absolute Maximum Ratings (Note 1)

Supply Voltage (V_{IN}) ..... +6V
Fault Flag Voltage (V_{FLG}) ..... +6V
Fault Flag Current (I_{FLG}) 25mA
Output Voltage (V_{OUT}) ..... +6V
Output Current (I_{OUT}) ..... Internally Limited
Control Input (V_{EN}) ..... –0.3V to V_{IN} +2V
Storage Temperature (T_S) ..... –65°C to +150°C
Lead Temperature (Soldering 5 sec.) ..... 260°C
ESD Rating, **Note 3** 1kV

Operating Ratings (Note 2)

Supply Voltage (V_{IN}) ..... +2.7V to +5.5V
Ambient Operating Temperature (T_A) ..... –40°C to +85°C
Thermal Resistance
SOP (θ_{JA}) ..... 160°C/W
MSOP (θ_{JA}) ..... 206°C/W

Electrical Characteristics

V_{IN} = +5V; T_A = 25°C, **bold** values indicate –40°C ≤ T_A ≤ +85°C; unless noted

Parameter	Condition	Min	Typ	Max	Units
Supply Current	both switches off, OUTA–B = open, **Note 4**		0.75	5	µA
	both switches on, OUTA–B = open, **Note 4**		60	100	µA
Enable Input Threshold	low-to-high transition, **Note 4**		1.7	2.4	V
	high-to-low transition, **Note 4**	0.8	1.5		V
Enable Input Current	V_{EN} = 0V to 5.5V		0.01	1	µA
Enable Input Capacitance	**Note 5**		1		pF
Switch Resistance	single switch, I_{OUT} = 100mA		400	**700**	mΩ
Output Turn-On Delay, t_{ON}	R_L = 50Ω, C_L = 1µF		1.5		ms
Output Turn-On Rise Time, t_R	R_L = 50Ω, C_L = 1µF		1.4		ms
Output Turnoff Delay, t_{OFF}	R_L = 50Ω, C_L = 1µF		130		µs
Output Turnoff Fall Time, t_F	R_L = 50Ω, C_L = 1µF		115		µs
Output Leakage Current	each output (switch off)		1	10	µA
Current Limit Threshold	ramped load applied to enable output			**500**	mA
Short Circuit Current Limit	each output (enabled into load), V_{OUT} = 0V	150	275	**400**	mA
Current Limit Response	V_{OUT} = 0V to I_{OUT} = I_{LIMIT} (short applied to output), **Note 5**		10		µs
Flag Response Delay, t_D	V_{IN} = 5V, apply V_{OUT} = 0V until FLG low	5	13	20	ms
	V_{IN} = 3.3V, apply V_{OUT} = 0V until FLG low		13		ms
Overtemperature Shutdown	T_J increasing, **Note 5**		135		°C
Threshold	T_J decreasing, **Note 5**		125		°C
Error Flag Output Resistance	V_{IN} = 5V, I_L = 10mA		10	20	Ω
	V_{IN} = 3.3V, I_L = 10mA		15	30	Ω
Error Flag Off Current	V_{FLAG} = 5V		0.01	**1**	µA

Note 1. Exceeding the absolute maximum rating may damage the device.

Note 2. The device is not guaranteed to function outside its operating rating.

Note 3. Devices are ESD sensitive. Handling precautions recommended. Human body model, 1.5kΩ in series with 100pF.

Note 4. Off is ≤ 0.8V and on is ≥ 2.4V for the MIC2536-1. Off is ≥ 2.4V and on is ≤ 0.8V for the MIC2536-2. The enable input has approximately 200mV of hysteresis.

Note 5. Guaranteed by design. Not production tested.

Test Circuit

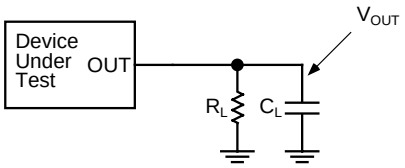

Functional Characteristics Test Circuit

Timing Diagrams

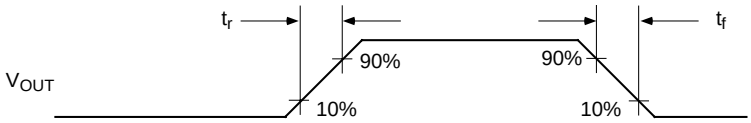

Output Rise and Fall Times

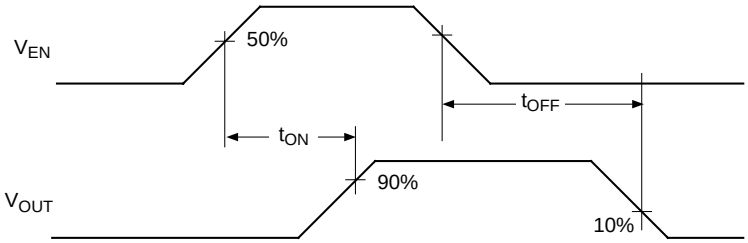

Active-High Switch Delay Times (MIC2536-1)

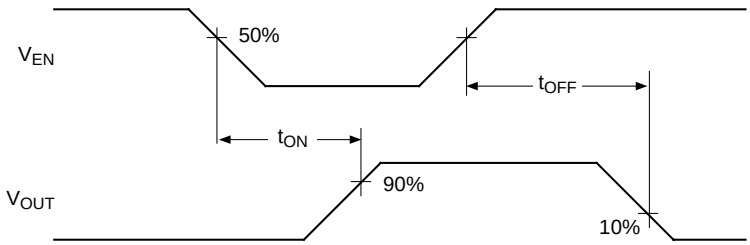

Active-Low Switch Delay Times (MIC2536-2)

Supply On Current vs. Input Voltage

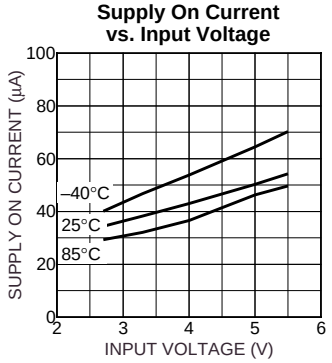

Output On-Resistance vs. Input Voltage

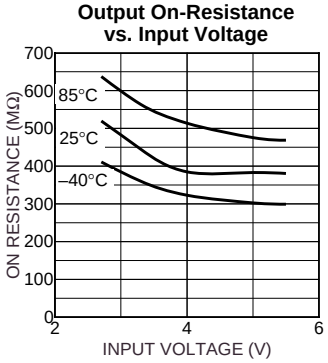

Output Rise Time vs. Input Voltage

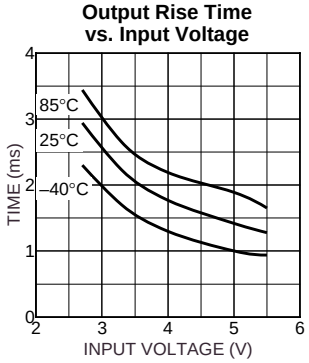

Output Fall Time vs. Input Voltage

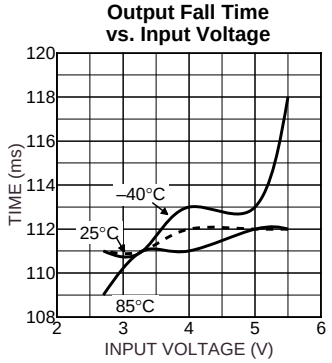

Control Voltage vs. Input Voltage VEN Falling

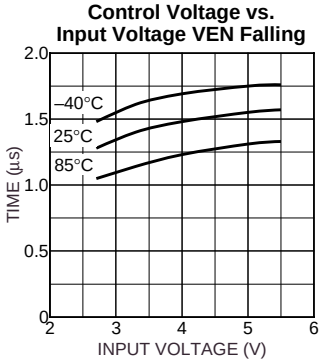

Control Voltage vs. Input Voltage VEN Rising

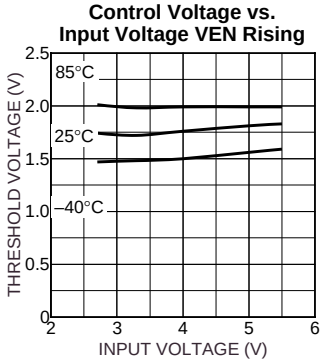

Flag Delay vs. Input Voltage

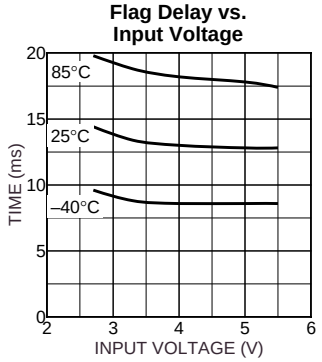

Supply Off Current vs. Input Voltage

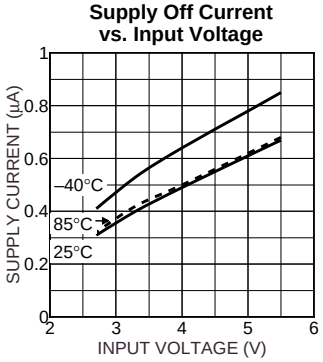

Current Limit Threshold vs. Input Voltage

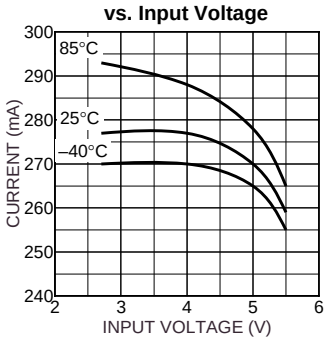

Short Circuit Current Limit vs. Input Voltage

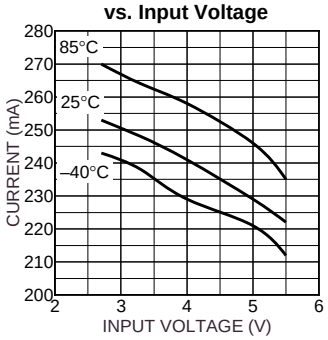

Functional Characteristics

Turn-On / Turnoff (MIC2536-1)

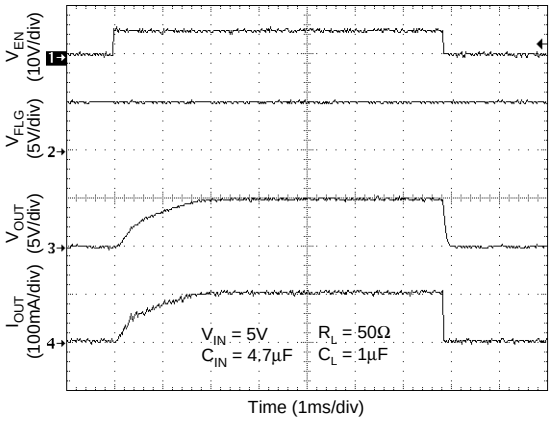

Turn-On (MIC2536-1)

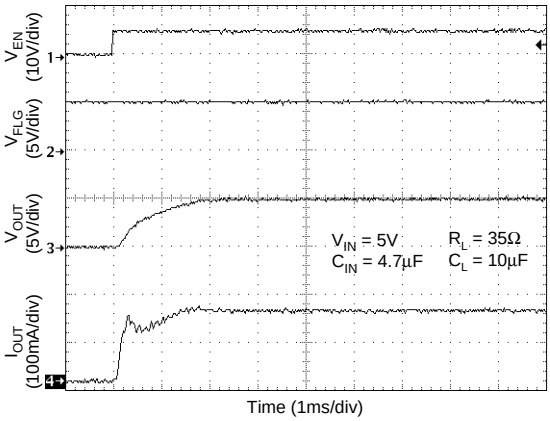

Turnoff (MIC2536-1)

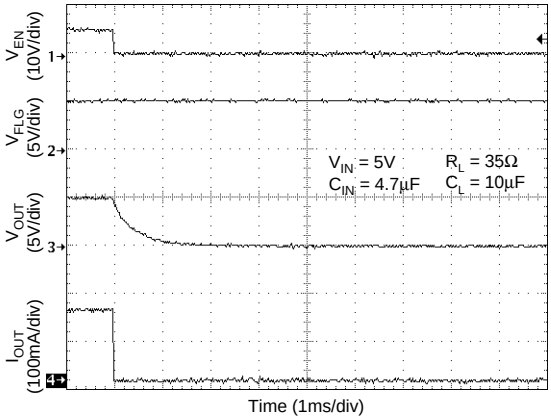

Turn-On (MIC2536-1)

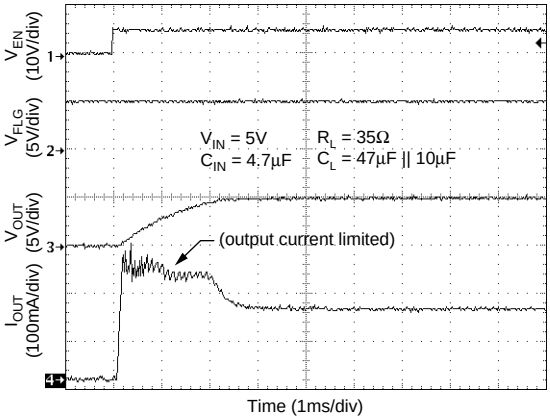

Turnoff (MIC2536-1)

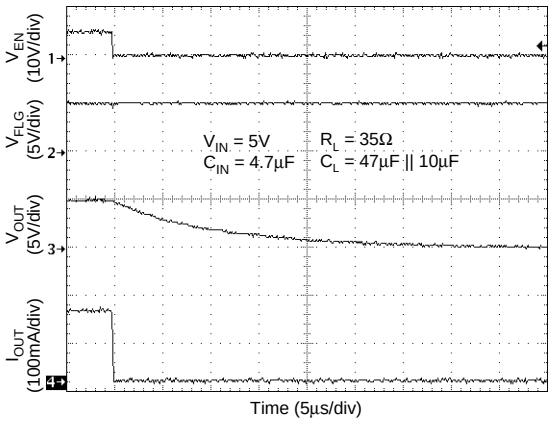

Enabled Into Short Circuit (MIC2536-1)

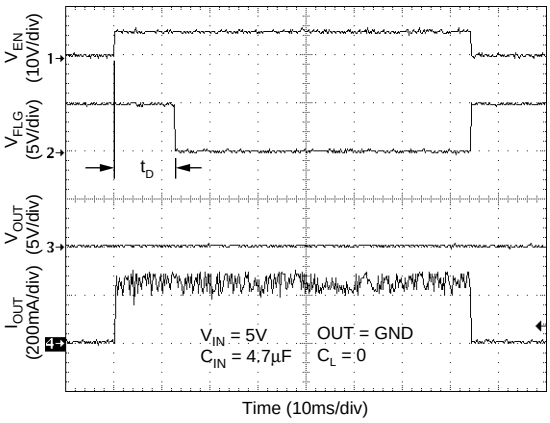

Ramped Into Short Circuit (MIC2536-1)

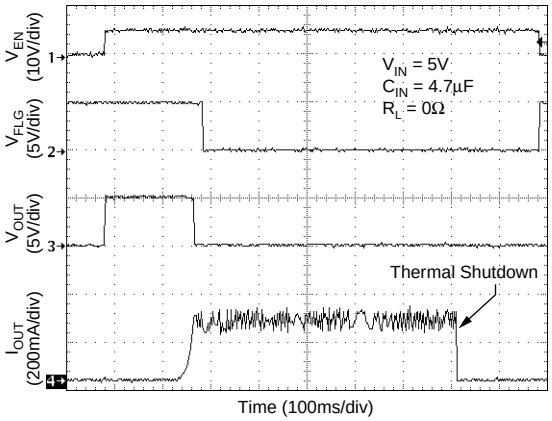

Inrush Current (MIC2536-1)

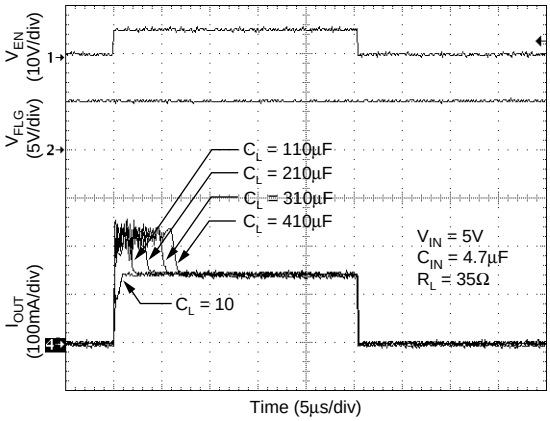

Current-Loop Response (MIC2536-1)

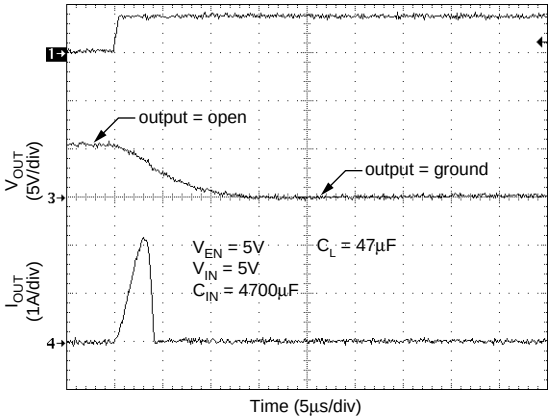

Block Diagram

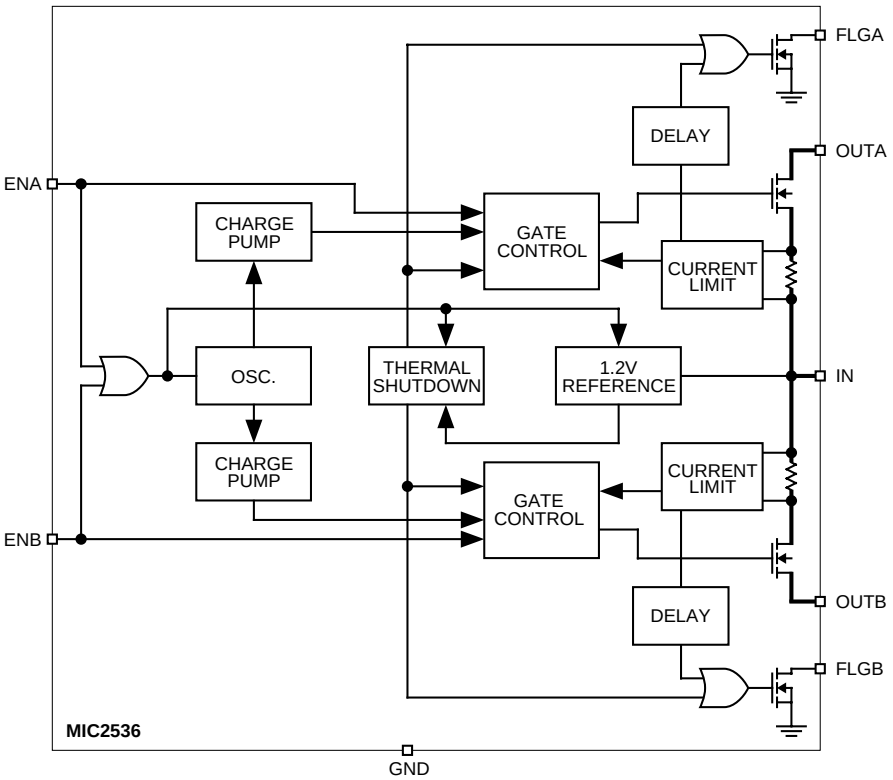

Functional Description

The MIC2536-1 and MIC2536-2 are dual high-side switches with active-high and active-low enable inputs, respectively. Fault conditions turn off or inhibit turn-on of one or more of the output transistors, depending upon the type of fault, and activate the open-drain error flag transistors making them sink current to ground.

Input and Output

IN (input) is the power supply connection to the logic circuitry and the drain of each output MOSFET. OUTx (output) is the source of each respective MOSFET. In a typical circuit, current flows through the switch from IN to OUTx toward the load. If V_{OUT} is greater than V_{IN}, current will flow from OUT to IN during an on-condition since the MOSFET is bidirectional when enabled.

The output MOSFET and driver circuitry are also designed to allow the MOSFET source to be externally forced to a higher voltage than the drain ($V_{OUTx} > V_{IN}$) when the output is disabled. In this situation, the MIC2536 prevents reverse current flow.

Thermal Shutdown

Each output MOSFET has its own thermal sensor. If either or both channels reach 135°C, affected channel(s) will be shut down and flag(s) asserted. 10°C of hysteresis prevents the switches from turning on until the die temperature drops to 125°C. Overtemperature detection functions only when at least one switch is enabled.

The MIC2536 will automatically reset its output when the die temperature cools to approximately 125°C. The MIC2536 output and FLG signal will continue to cycle on and off until the device is disabled or the fault is removed.

Depending on PCB layout, package, ambient temperature, etc., it may take several hundred milliseconds from the occurrence of the fault to the output MOSFET being shut off. Delay to reach thermal shutdown will be shortest with a dead short on the output.

Current-Limit Induced Thermal Shutdown

Internal circuitry increases the output MOSFET on-resistance until the series combination of the MOSFET on-resistance and the load impedance limits output current to approximately 275mA. The resulting increase in power dissipation may cause the shorted channel to go into thermal shutdown. In addition, even though individual channels are thermally isolated, it is possible they may shut down when an adjacent channel is shorted. When this is undesirable, thermal shutdown can be avoided by externally responding to the fault and disabling the current-limited channel before the shutdown temperature is reached. The delay between the flag indication of a current-limit fault and thermal shutdown will vary with ambient temperature, board layout, and load impedance, but is typically several seconds. The USB controller must therefore recognize a fault and disable the appropriate channel within this time.

Power Dissipation

Power dissipation depends on several factors such as the load, PCB layout, ambient temperature and package type. Equations that can be used to calculate power dissipation and die temperature are found below:

Calculation of power dissipated by each channel can be accomplished by the following equation:

$$P_D = R_{DS(on)} \times (I_{OUT})^2$$

Total power dissipation of the device will be the summation of P_D for both channels. To relate this to junction temperature, the following equation can be used:

$$T_j = P_D \times \theta_{JA} + T_A$$

where:

T_j = junction temperature

T_A = ambient temperature

θ_{JA} = is the thermal resistance of the package

Current Sensing and Limiting

The current-limit threshold is preset internally. The preset level prevents damage to the output MOSFET and external load but allows a minimum current of 150mA through the output MOSFET of each channel.

The current-limit circuit senses a portion of the output FET switch current. The current sense resistor shown in the block diagram is virtual and has no voltage drop. The reaction to an overcurrent condition varies with the following three scenarios:

Switch Enabled into Short Circuit

If a switch is enabled into a heavy load or short circuit, the switch immediately goes into a constant-current mode, reducing the output voltage. The FLG is asserted indicating an overcurrent condition.

Short Circuit Applied to Output

When a heavy load or short circuit is applied to an enabled switch, a large transient current may flow until the current-limit circuitry responds. Once this occurs, the device limits current to less than the maximum short-circuit current-limit specification.

Current-Limit Response Ramped Load

The MIC2536 current-limit profile exhibits a small foldback effect of approximately 100mA. Once this current-limit threshold is exceeded the device enters constant-current mode. This constant current is specified as the short-circuit current-limit in the “Electrical Characteristics” table. It is important to note that the MIC2536 will deliver load current up to the current-limit threshold before entering current-limited operation.

Fault Flag

FLGx is an open-drain N-channel MOSFET output. Fault flags are active (low) for current-limit or thermal shutdown. In the case where an overcurrent condition occurs, FLG will be asserted only after the flag response delay time, t_D has elapsed. This ensures that FLG is asserted only upon valid overcurrent conditions and that erroneous error reporting is eliminated. False overcurrent conditions can occur during hot-plug events when a highly capacitive load is connected and causes a high transient inrush current that exceeds the current-limit threshold. The flag response delay time is typically 12ms.

Applications Information

Supply Filtering

A 0.1µF to 1µF bypass capacitor from IN to GND, located at the device, is strongly recommended to control supply transients. Without a bypass capacitor, an output short may cause sufficient ringing on the input (from supply lead inductance) to damage internal control circuitry.

Input or output transients must not exceed the absolute maximum supply voltage ($V_{IN(max)}$ = 6V) even for a short duration.

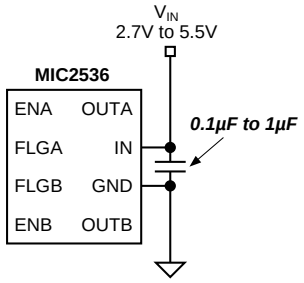

Figure 1. Supply Bypassing

Enable Input

EN must be driven logic high or logic low for a clearly defined input. Floating the input may cause unpredictable operation. EN should not be allowed to go negative with respect to GND.

Printed Circuit Board Hot-Plug

The MIC2536 is an ideal inrush current-limiter for hot-plug applications. Due to the integrated charge pump, the MIC2536 presents a high impedance when off and slowly becomes a low impedance as it turns on. This "soft-start" feature effectively isolates power supplies from highly capacitive loads by reducing inrush current. Figure 2 shows how the MIC2536 may be used in a hot-plug card application.

Overcurrent Transients

The MIC2536 incorporates an internal circuit designed to prevent FLG from being asserted due to transient inrush current. Overcurrent events <12ms (typ.) will not assert FLG.

In case of large capacitive loads (i.e., >430µF), the length of the transient due to inrush current may exceed the delay provided by the integrated filter. Since this inrush current exceeds the current-limit delay specification, FLG will be asserted during this time. To prevent the logic controller from responding to FLG being asserted, an external RC filter, as shown in Figure 3, can be used to filter out transient FLG assertion. The value of the RC time constant should be selected to match the length of the transient, minus flag t_D.

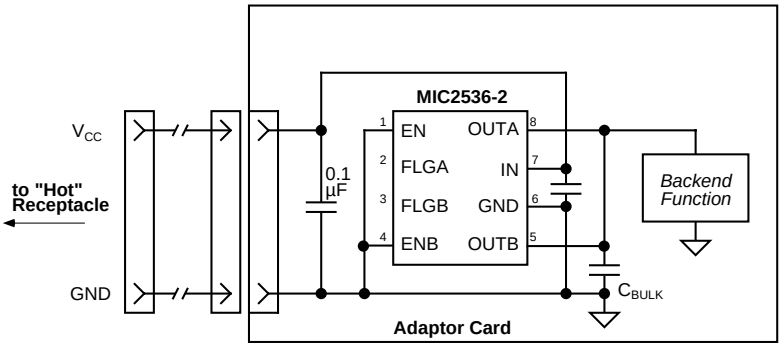

Figure 2. Hot-Plug Card Application

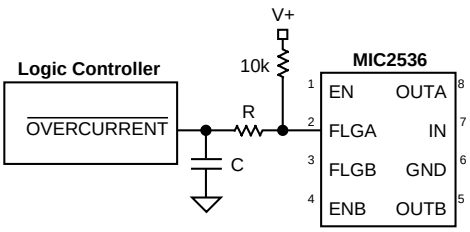

Figure 3. Transient Filter

Universal Serial Bus (USB) Power Distribution Applications

The MIC2536 is ideally suited for USB (Universal Serial Bus) power distribution applications. For Bus-Powered hubs, USB requires that each downstream port be switched on or off under control by the host. Up to four downstream ports each capable of supplying 100mA at 4.4V minimum are allowed. In additon, to reduce voltage droop on the upstream bus the hub must consume only 100mA max at start-up until it enumerates with the host prior to requesting more power. The same requirements apply for bus-powered peripherals that have no downstream ports. Figure 4 shows a two-port bus-powered hub.

Bus-Powered Hub Port Switching

The USB Specification requires that bus-powered hubs implement port switching on either a ganged or individual basis. The specific implementation must be reported via the Hub Descriptor Status Register. Individual port switching has advantages in that a fault on one port will not prevent the other ports from operating correctly. In addition, a soft-start circuit must be included in order to reduce inrush currents when the switch is enabled. To meet this requirement, the MIC2536 has been designed to slowly ramp its output.

Suspend Current

Universal Serial Bus Specification places a maximum suspend current requirement of 500µA on devices. For hubs, *Universal Serial Bus Specification Revision 1.1* clarifies this issue. Revision 1.1, section 7.2.3, stipulates that the maximum suspend current for a configured hub is 2.5mA. This number is derived by allocating 500µA for up to four downstream ports plus 500µA for the hub's internal functions. A nonconfigured hub is considered a low-power device and may not consume more than 500µA. In a nonconfigured state all downstream devices will be switched off. In most cases, a nonconfigured hub is not a practical state for the system. Therefore, the 2.5mA specification is the applicable target specification for the suspend state. In a bus-powered hub with less than 4 ports, the hub may use the additional current for internal functions.

The 500µA worst case suspend current must be further divided among the data port termination resistors and internal functions. The termination resistors will consume 3.6V ÷ (16.5KΩ – 5%) = 230µA. This leaves only 270µA for internal functions. Assuming 100µA as the maximum USB controller suspend current, 170µA remains for the rest of the system. The MIC2536 will consume 100µA maximum, leaving a margin of 70µA.

USB Voltage Regulation

USB specifications require a minimum downstream voltage supply of 4.40V from a bus-powered hub port (See *Application Note 17* for details). The USB specification allows for a 100mV drop across the hub, leaving 250mV for PCB, upstream cable, and connector resistance. Therefore, the on-resistance of the switch for each port, not including PCB resistance, must be <100mV ÷ 100mA = 1Ω. The MIC2536 has a maximum on-resistance of 700mΩ, which easily satisfies this requirement.

Overcurrent Indication

The USB Specification does not require bus-powered hubs to report overcurrent conditions to the host, since the hub is already current-limited at the upstream port. However, if it is desired to report overcurrent, the Hub Descriptor Status Register must be programmed to indicate this. The MIC2536 provides a flag output for this application.

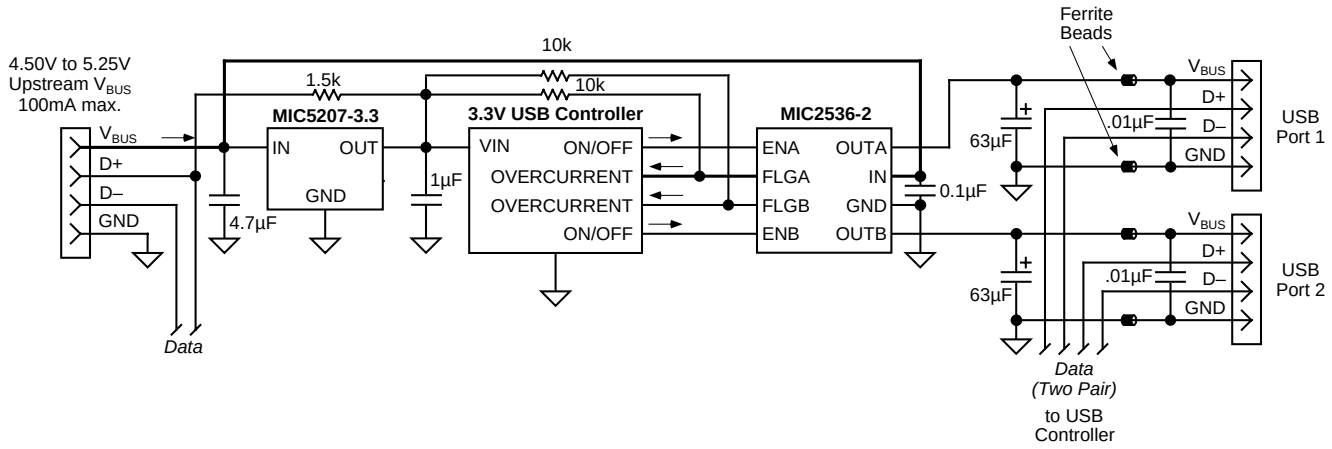

Figure 4. USB Two-Port Bus-Powered Hub

Package Information

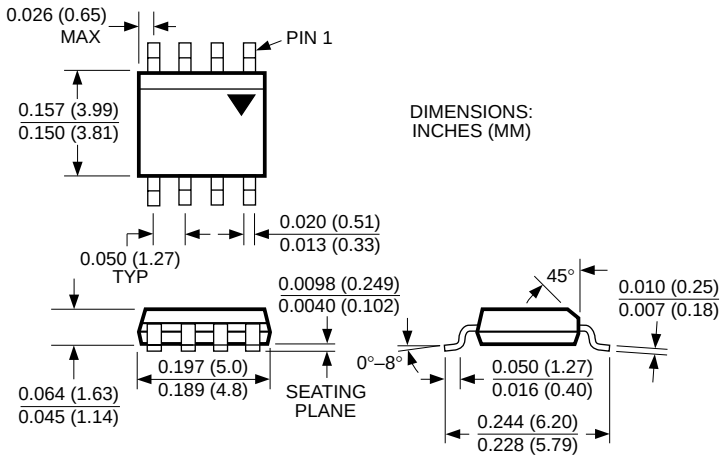

8-Lead SOP (M)

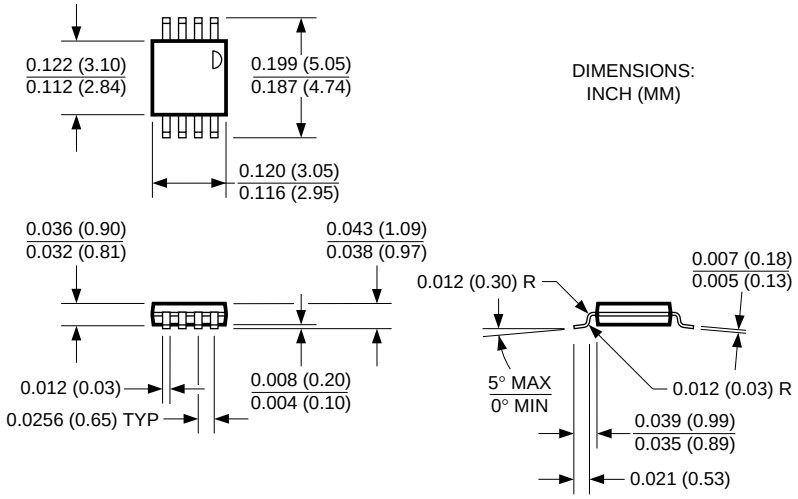

8-Lead MSOP (MM)

MICREL INC. 1849 FORTUNE DRIVE SAN JOSE, CA 95131 USA

TEL + 1 (408) 944-0800 FAX + 1 (408) 944-0970 WEB http://www.micrel.com

This information is believed to be accurate and reliable, however no responsibility is assumed by Micrel for its use nor for any infringement of patents or other rights of third parties resulting from its use. No license is granted by implication or otherwise under any patent or patent right of Micrel Inc.

© 2000 Micrel Incorporated

OCEAN CHIPS
Океан Электроники
Поставка электронных компонентов

Компания «Океан Электроники» предлагает заключение долгосрочных отношений при поставках импортных электронных компонентов на взаимовыгодных условиях!

Наши преимущества:

- Поставка оригинальных импортных электронных компонентов напрямую с производств Америки, Европы и Азии, а так же с крупнейших складов мира;
- Широкая линейка поставок активных и пассивных импортных электронных компонентов (более 30 млн. наименований);
- Поставка сложных, дефицитных, либо снятых с производства позиций;
- Оперативные сроки поставки под заказ (от 5 рабочих дней);
- Экспресс доставка в любую точку России;
- Помощь Конструкторского Отдела и консультации квалифицированных инженеров;
- Техническая поддержка проекта, помощь в подборе аналогов, поставка прототипов;
- Поставка электронных компонентов под контролем ВП;
- Система менеджмента качества сертифицирована по Международному стандарту ISO 9001;
- При необходимости вся продукция военного и аэрокосмического назначения проходит испытания и сертификацию в лаборатории (по согласованию с заказчиком);
- Поставка специализированных компонентов военного и аэрокосмического уровня качества (Xilinx, Altera, Analog Devices, Intersil, Interpoint, Microsemi, Actel, Aeroflex, Peregrine, VPT, Syfer, Eurofarad, Texas Instruments, MS Kennedy, Miteq, Cobham, E2V, MA-COM, Hittite, Mini-Circuits, General Dynamics и др.);

Компания «Океан Электроники» является официальным дистрибьютором и эксклюзивным представителем в России одного из крупнейших производителей разъемов военного и аэрокосмического назначения **«JONHON»**, а так же официальным дистрибьютором и эксклюзивным представителем в России производителя высокотехнологичных и надежных решений для передачи СВЧ сигналов **«FORSTAR»**.

AVIC JONHON

«JONHON» (основан в 1970 г.)

Разъемы специального, военного и аэрокосмического назначения:

(Применяются в военной, авиационной, аэрокосмической, морской, железнодорожной, горно- и нефтедобывающей отраслях промышленности)

«FORSTAR» (основан в 1998 г.)

ВЧ соединители, коаксиальные кабели, кабельные сборки и микроволновые компоненты:

(Применяются в телекоммуникациях гражданского и специального назначения, в средствах связи, РЛС, а так же военной, авиационной и аэрокосмической отраслях промышленности).

FORSTAR®

Телефон: 8 (812) 309-75-97 (многоканальный)
Факс: 8 (812) 320-03-32
Электронная почта: ocean@oceanchips.ru
Web: http://oceanchips.ru/
Адрес: 198099, г. Санкт-Петербург, ул. Калинина, д. 2, корп. 4, лит. А