DATASHEET

FOUR CHANNEL HD AUDIO CODECS

DUAL CAPLESS HEADPHONE AMPLIFIERS

92HD66B

DESCRIPTION

The 92HD66B is a low power optimized, high fidelity, 4-channel audio codec compatible with Intel's High Definition (HD) Audio Interface.

The 92HD66B provides high quality, HD Audio capability to notebook and desktop PC applications.

FEATURES

- **4 Channels (2 stereo ADCs) with 24-bit resolution**
- **Full HDA015-B and EuP low power support**
  - Audio inactivity transitions codec from D0 to D3 low power mode
  - Resume from D3 to D0 with audio activity in < 10 msec
  - D3 to D0 transition with < -65dB pop/click
  - Port presence detect in D3 with or without bit clock
  - PC beep wake up in D3
  - Additional vendor specific modes for even lower power
- **Microsoft WLP premium logo compliant**
- **4 or 5 analog ports with port presence detect***
- **3 integrated headphone amplifiers**
- **2 Capless headphone amplifiers**
- **3 or 4 ports support adjustable microphone bias***
- **Dual SPDIF outputs for WLP compliant support of simultaneous HDMI and SPDIF output**
- **SPDIF Input**
- **Two digital microphone inputs (mono, stereo or quad)**
- **High performance analog mixer**
- **Support for 1.5V and 3.3V HDA signaling**
- **Integrated AVDD LDO for improved PSRR**
- **+5V or +3.3V analog power supply**
- **Digital and Analog PC Beep to all outputs**
- **48-pin or 40-pin QFN RoHS packages**

SOFTWARE SUPPORT

- **Intuitive TSI HD Sound graphical user interface that allows configurability and preference settings**
- **12 band fully parametric equalizer**
  - Constant, system-level effects tuned to optimize a particular platform can be combined with user-mode "presets" tailored for specific acoustical environments and applications
  - System-level effects automatically disabled when external audio connections made
- **Dynamics Processing**
  - Enables improved voice articulation
  - Compressor/limiter allows higher average volume level without resonances or damage to speakers.
- **TSI Vista APO wrapper**
  - Enables multiple APOs to be used with the TSI Driver
- **Microphone Beam Forming, Acoustic Echo Cancellation, and Noise Suppression**
- **Dynamic Stream Switching**
  - Improved multi-streaming user experience with less support calls
- **Broad 3rd party branded software including Creative, Dolby, DTS, and SRS**

DEVICE OPTIONS

- **4 Channel, 48-pin QFN package**
- **4 Channel, 40-pin QFN package**
  - ***40-pin package removes**
    - Port E and related VREF_Out
    - Mono Out
    - GPIO 4

©2014 TEMPO SEMICONDCUTOR, INC.

TABLE OF CONTENTS

DESCRIPTION 10
Overview 10
Orderable Part Numbers 10
DETAILED DESCRIPTION 11
Port Functionality 11
Port Characteristics 11
Vref_Out 12
Jack Detect 12
SPDIF Output 13
SPDIF Input 15
Mono Output 16
Analog Mixer 16
ADC Multiplexers 16
Power Management 17
AFG D0 18
AFG D1 18
AFG D2 18
AFG D3 18
AFG D3cold 18
Vendor Specific Function Group Power States D4/D5 19
Vendor Specific Function Group Power State “D5 Kill” 19
Low-voltage HDA Signaling 19
Multi-channel capture 19
EAPD 21
Digital Microphone Support 24
Analog PC-Beep 28
PC_Beep Activity Monitor 29
Digital PC-Beep 31
Headphone Drivers 32
GPIO 32
GPIO Pin mapping and shared functions 32
Digital Microphone/GPIO Selection 32
SPDIF_OUT/GPIO/DMIC Selection 33
HD Audio ECR 15b support 33
Digital Core Voltage Regulator 34
Analog Core Voltage Regulator 34
Combo Jack 34
CHARACTERISTICS 35
Audio Fidelity 35
Electrical Specifications 35
Absolute Maximum Ratings 35
Recommended Operating Conditions 35
92HD66B Analog Performance Characteristics 36
Capless Headphone Supply Characteristics 41
AC Timing Specs 41
HD Audio Bus Timing 41
SPDIF Timing 42
Digital Microphone Timing 42
GPIO Characteristics 42
COMMON PORT CONFIGURATIONS 43
FUNCTIONAL DIAGRAMS 44
48-pin Package 44
40-pin Package 45
48-pin Package Widget Diagram 46
40-pin Package Widget Diagram 47
48-Pin Configuration Default Register Settings 48
40-Pin Configuration Default Register Settings 49

©2014 TEMPO SEMICONDCUTOR, INC..

WIDGET INFORMATION 50
Widget List 50
Widget Descriptions 51
Widget Details 51
Device IDs 51
Reset Key 52
Root (NID = 00h): VendorID 52
Root (NID = 00h): RevID 53
Root (NID = 00h): NodeInfo 53
AFG (NID = 01h): NodeInfo 54
AFG (NID = 01h): FGType 54
AFG (NID = 01h): AFGCap 55
AFG (NID = 01h): PCMCap 56
AFG (NID = 01h): StreamCap 57
AFG (NID = 01h): InAmpCap 58
AFG (NID = 01h): PwrStateCap 59
AFG (NID = 01h): GPIOCnt 60
AFG (NID = 01h): OutAmpCap 60
AFG (NID = 01h): PwrState 61
AFG (NID = 01h): UnsolResp 62
AFG (NID = 01h): GPIO 62
AFG (NID = 01h): GPIOEn 63
AFG (NID = 01h): GPIODir 64
AFG (NID = 01h): GPIOWakeEn 65
AFG (NID = 01h): GPIOUnsol 66
AFG (NID = 01h): GPIOSticky 67
AFG (NID = 01h): SubID 67
AFG (NID = 01h): GPIOPlrty 68
AFG (NID = 01h): GPIODrive 69
AFG (NID = 01h): DMic 70
AFG (NID = 01h): DACMode 71
AFG (NID = 01h): ADCMode 72
AFG (NID = 01h): PortUse 73
AFG (NID = 01h): ComJack 74
AFG (NID = 01h): ComJackTime 75
AFG (NID = 01h): VSPwrState 77
AFG (NID = 01h): AnaPort 77
AFG (NID = 01h): AnaBeep 79
AFG (NID = 01h): AnaCapless 79
AFG (NID = 01h): Reset 82
PortA (NID = 0Ah): WCap 83
PortA (NID = 0Ah): PinCap 84
PortA (NID = 0Ah): ConLst 85
PortA (NID = 0Ah): ConLstEntry0 86
PortA (NID = 0Ah): InAmpLeft 86
PortA (NID = 0Ah): InAmpRight 87
PortA (NID = 0Ah): ConSelectCtrl 87
PortA (NID = 0Ah): PwrState 88
PortA (NID = 0Ah): PinWCntrl 88
PortA (NID = 0Ah): UnsolResp 89
PortA (NID = 0Ah): ChSense 90
PortA (NID = 0Ah): EAPDBTLLR 90
PortA (NID = 0Ah): ConfigDefault 91
PortB (NID = 0Bh): WCap 93
PortB (NID = 0Bh): PinCap 95
PortB (NID = 0Bh): ConLst 96
PortB (NID = 0Bh): ConLstEntry0 97
PortB (NID = 0Bh): InAmpLeft 97
PortB (NID = 0Bh): InAmpRight 98

©2014 TEMPO SEMICONDCUTOR, INC..

PortB (NID = 0Bh): ConSelectCtrl 98
PortB (NID = 0Bh): PwrState 98
PortB (NID = 0Bh): PinWCntrl 99
PortB (NID = 0Bh): UnsolResp 100
PortB (NID = 0Bh): ChSense 101
PortB (NID = 0Bh): EAPDBTLLR 101
PortB (NID = 0Bh): ConfigDefault 101
PortC (NID = 0Ch): WCap 104
PortC (NID = 0Ch): PinCap 105
PortC (NID = 0Ch): ConLst 106
PortC (NID = 0Ch): ConLstEntry0 107
PortC (NID = 0Ch): InAmpLeft 107
PortC (NID = 0Ch): InAmpRight 108
PortC (NID = 0Ch): ConSelectCtrl 108
PortC (NID = 0Ch): PwrState 109
PortC (NID = 0Ch): PinWCntrl 109
PortC (NID = 0Ch): UnsolResp 110
PortC (NID = 0Ch): ChSense 111
PortC (NID = 0Ch): EAPDBTLLR 111
PortC (NID = 0Ch): ConfigDefault 112
NID = 0Dh Reserved 114
PortE (NID = 0Eh): WCap (Available only on 48-pin versions) 114
PortE (NID = 0Eh): PinCap (Available only on 48-pin versions) 116
PortE (NID = 0Eh): ConLst (Available only on 48-pin versions) 117
PortE (NID = 0Eh): ConLstEntry0 (Available only on 48-pin versions) 118
PortE (NID = 0Eh): InAmpLeft (Available only on 48-pin versions) 118
PortE (NID = 0Eh): InAmpRight (Available only on 48-pin versions) 118
PortE (NID = 0Eh): ConSelectCtrl (Available only on 48-pin versions) 119
PortE (NID = 0Eh): PwrState (Available only on 48-pin versions) 119
PortE (NID = 0Eh): PinWCntrl (Available only on 48-pin versions) 120
PortE (NID = 0Eh): UnsolResp (Available only on 48-pin versions) 121
PortE (NID = 0Eh): ChSense (Available only on 48-pin versions) 121
PortE (NID = 0Eh): EAPDBTLLR (Available only on 48-pin versions) 122
PortE (NID = 0Eh): ConfigDefault (Available only on 48-pin versions) 122
PortF (NID = 0Fh): WCap 125
PortF (NID = 0Fh): PinCap 126
PortF (NID = 0Fh): ConLst 127
PortF (NID = 0Fh): ConLstEntry0 128
PortF (NID = 0Fh): InAmpLeft 128
PortF (NID = 0Fh): InAmpRight 129
PortF (NID = 0Fh): ConSelectCtrl 129
PortF (NID = 0Fh): PwrState 130
PortF (NID = 0Fh): PinWCntrl 130
PortF (NID = 0Fh): UnsolResp 131
PortF (NID = 0Fh): ChSense 132
PortF (NID = 0Fh): EAPDBTLLR 132
PortF (NID = 0Fh): ConfigDefault 132
MonoOut (NID = 10h): WCap (Available only on 48-pin versions) 135
MonoOut (NID = 10h): PinCap (Available only on 48-pin versions) 136
MonoOut (NID = 10h): ConLst (Available only on 48-pin versions) 137
MonoOut (NID = 10h): ConLstEntry0 (Available only on 48-pin versions) 138
MonoOut (NID = 10h): PwrState (Available only on 48-pin versions) 138
MonoOut (NID = 10h): PinWCntrl (Available only on 48-pin versions) 139
MonoOut (NID = 10h): UnsolResp (Available only on 48-pin versions) 140
MonoOut (NID = 10h): ChSense (Available only on 48-pin versions) 140
MonoOut (NID = 10h): ConfigDefault (Available only on 48-pin versions) 141
DMic0 (NID = 11h): WCap 143
DMic0 (NID = 11h): PinCap 145
DMic0 (NID = 11h): InAmpLeft 146

©2014 TEMPO SEMICONDCUTOR, INC..

DMic0 (NID = 11h): InAmpRight 146
DMic0 (NID = 11h): PwrState 147
DMic0 (NID = 11h): PinWCntrl 148
DMic0 (NID = 11h): ConfigDefault 148
DMic1Vol (NID = 12h): WCap 151
DMic1Vol (NID = 12h): ConLst 152
DMic1Vol (NID = 12h): ConLstEntry0 153
DMic1Vol (NID = 12h): InAmpLeft 153
DMic1Vol (NID = 12h): InAmpRight 153
DMic1Vol (NID = 12h): ConSelectCtrl 154
DMic1Vol (NID = 12h): PwrState 154
DAC0 (NID = 13h): WCap 155
DAC0 (NID = 13h): Cnvtr 157
DAC0 (NID = 13h): OutAmpLeft 158
DAC0 (NID = 13h): OutAmpRight 158
DAC0 (NID = 13h): PwrState 159
DAC0 (NID = 13h): CnvtrID 160
DAC0 (NID = 13h): EAPDBTLLR 160
DAC1 (NID = 14h): WCap 161
DAC1 (NID = 14h): Cnvtr 162
DAC1 (NID = 14h): OutAmpLeft 163
DAC1 (NID = 14h): OutAmpRight 164
DAC1 (NID = 14h): PwrState 164
DAC1 (NID = 14h): CnvtrID 165
DAC1 (NID = 14h): EAPDBTLLR 166
ADC0 (NID = 15h): WCap 166
ADC0 (NID = 15h): ConLst 168
ADC0 (NID = 15h): ConLstEntry0 168
ADC0 (NID = 15h): Cnvtr 169
ADC0 (NID = 15h): ProcState 170
ADC0 (NID = 15h): PwrState 170
ADC0 (NID = 15h): CnvtrID 171
ADC1 (NID = 1Bh): WCap 172
ADC1 (NID = 1Bh): ConLst 173
ADC1 (NID = 1Bh): ConLstEntry0 174
ADC1 (NID = 1Bh): Cnvtr 174
ADC1 (NID = 1Bh): ProcState 176
ADC1 (NID = 1Bh): PwrState 176
ADC1 (NID = 1Bh): CnvtrID 177
ADC0Mux (NID = 17h): WCap 177
ADC0Mux (NID = 17h): ConLst 179
ADC0Mux (NID = 17h): ConLstEntry4 179
ADC0Mux (NID = 17h): ConLstEntry0 180
ADC0Mux (NID = 17h): OutAmpCap 180
ADC0Mux (NID = 17h): OutAmpLeft 181
ADC0Mux (NID = 17h): OutAmpRight 182
ADC0Mux (NID = 17h): ConSelectCtrl 182
ADC0Mux (NID = 17h): PwrState 183
ADC0Mux (NID = 17h): EAPDBTLLR 183
ADC1Mux (NID = 18h): WCap 184
ADC1Mux (NID = 18h): ConLst 185
ADC1Mux (NID = 18h): ConLstEntry4 186
ADC1Mux (NID = 18h): ConLstEntry0 186
ADC1Mux (NID = 18h): OutAmpCap 187
ADC1Mux (NID = 18h): OutAmpLeft 188
ADC1Mux (NID = 18h): OutAmpRight 188
ADC1Mux (NID = 18h): ConSelectCtrl 189
ADC1Mux (NID = 18h): PwrState 189
ADC1Mux (NID = 18h): EAPDBTLLR 190

©2014 TEMPO SEMICONDCUTOR, INC..

MonoMux (NID = 19h): WCap (Available only on 48-pin versions) 190
MonoMux (NID = 19h): ConLst (Available only on 48-pin versions) 192
MonoMux (NID = 19h): ConLstEntry0 (Available only on 48-pin versions) 192
MonoMux (NID = 19h): ConSelectCtrl (Available only on 48-pin versions) 193
MonoMux (NID = 19h): PwrState (Available only on 48-pin versions) 193
MonoMix (NID = 1Ah): WCap (Available only on 48-pin versions) 194
MonoMix (NID = 1Ah): ConLst (Available only on 48-pin versions) 196
MonoMix (NID = 1Ah): ConLstEntry0 (Available only on 48-pin versions) 196
MonoMix (NID = 1Ah): PwrState (Available only on 48-pin versions) 197
Mixer (NID = 1Bh): WCap 198
Mixer (NID = 1Bh): InAmpCap 199
Mixer (NID = 1Bh): ConLst 200
Mixer (NID = 1Bh): ConLstEntry4 201
Mixer (NID = 1Bh): ConLstEntry0 201
Mixer (NID = 1Bh): InAmpLeft0 202
Mixer (NID = 1Bh): InAmpRight0 202
Mixer (NID = 1Bh): InAmpLeft1 203
Mixer (NID = 1Bh): InAmpRight1 203
Mixer (NID = 1Bh): InAmpLeft2 204
Mixer (NID = 1Bh): InAmpRight2 204
Mixer (NID = 1Bh): InAmpLeft3 205
Mixer (NID = 1Bh): InAmpRight3 205
Mixer (NID = 1Bh): InAmpLeft4 206
Mixer (NID = 1Bh): InAmpRight4 206
Mixer (NID = 1Bh): InAmpLeft5 207
Mixer (NID = 1Bh): InAmpRight5 207
Mixer (NID = 1Bh): InAmpLeft6 208
Mixer (NID = 1Bh): InAmpRight6 209
Mixer (NID = 1Bh): InAmpLeft7 209
Mixer (NID = 1Bh): InAmpRight7 210
Mixer (NID = 1Bh): PwrState 210
MixerOutVol (NID = 1Ch): WCap 211
MixerOutVol (NID = 1Ch): ConLst 212
MixerOutVol (NID = 1Ch): ConLstEntry0 213
MixerOutVol (NID = 1Ch): OutAmpCap 213
MixerOutVol (NID = 1Ch): OutAmpLeft 214
MixerOutVol (NID = 1Ch): OutAmpRight 215
MixerOutVol (NID = 1Ch): PwrState 215
SPDIFOut0 (NID = 1Dh): WCap 216
SPDIFOut0 (NID = 1Dh): PCMCap 218
SPDIFOut0 (NID = 1Dh): StreamCap 220
SPDIFOut0 (NID = 1Dh): OutAmpCap 220
SPDIFOut0 (NID = 1Dh): Cnvtr 221
SPDIFOut0 (NID = 1Dh): OutAmpLeft 222
SPDIFOut0 (NID = 1Dh): OutAmpRight 223
SPDIFOut0 (NID = 1Dh): PwrState 223
SPDIFOut0 (NID = 1Dh): CnvtrID 224
SPDIFOut0 (NID = 1Dh): DigCnvtr 224
SPDIFOut1 (NID = 1Eh): WCap 225
SPDIFOut1 (NID = 1Eh): PCMCap 227
SPDIFOut1 (NID = 1Eh): StreamCap 229
SPDIFOut1 (NID = 1Eh): OutAmpCap 229
SPDIFOut1 (NID = 1Eh): Cnvtr 230
SPDIFOut1 (NID = 1Eh): OutAmpLeft 231
SPDIFOut1 (NID = 1Eh): OutAmpRight 232
SPDIFOut1 (NID = 1Eh): PwrState 232
SPDIFOut1 (NID = 1Eh): CnvtrID 233
SPDIFOut1 (NID = 1Eh): DigCnvtr 234
Dig0Pin (NID = 1Fh): WCap 235

©2014 TEMPO SEMICONDCUTOR, INC..

Dig0Pin (NID = 1Fh): PinCap 236
Dig0Pin (NID = 1Fh): ConLst 237
Dig0Pin (NID = 1Fh): ConLstEntry0 238
Dig0Pin (NID = 1Fh): PwrState 238
Dig0Pin (NID = 1Fh): PinWCntrl 239
Dig0Pin (NID = 1Fh): UnsolResp 240
Dig0Pin (NID = 1Fh): ChSense 240
Dig0Pin (NID = 1Fh): ConfigDefault 241
Dig1Pin (NID = 20h): WCap 243
Dig1Pin (NID = 20h): PinCap 245
Dig1Pin (NID = 20h): ConLst 246
Dig1Pin (NID = 20h): ConLstEntry0 247
Dig1Pin (NID = 20h): PwrState 247
Dig1Pin (NID = 20h): PinWCntrl 248
Dig1Pin (NID = 20h): UnsolResp 249
Dig1Pin (NID = 20h): ChSense 249
Dig1Pin (NID = 20h): ConfigDefault 249
DigBeep (NID = 21h): WCap 252
DigBeep (NID = 21h): OutAmpCap 253
DigBeep (NID = 21h): OutAmpLeft 253
DigBeep (NID = 21h): PwrState 254
DigBeep (NID = 21h): Gen 255
SPDIFIn (NID = 22h): WCap 255
SPDIFIn (NID = 22h): Cnvtr 258
SPDIFIn (NID = 22h): PCMCap 259
SPDIFIn (NID = 22h): StreamCap 260
SPDIFIn (NID = 22h): ConLst 261
SPDIFIn (NID = 22h): ConLstEntry0 261
SPDIFIn (NID = 22h): PwrState 262
SPDIFIn (NID = 22h): CnvtrID 263
SPDIFIn (NID = 22h): DigCnvtr 263
SPDIFIn (NID = 22h): InAmpCap 264
SPDIFIn (NID = 22h): InAmpLeft 265
SPDIFIn (NID = 22h): InAmpRight 265
SPDIFIn (NID = 22h): VS 266
SPDIFIn (NID = 22h): Status 266
NID = 23h Reserved 269
Dig2Pin (NID = 24h): WCap 270
Dig2Pin (NID = 24h): PinCap 271
Dig2Pin (NID = 24h): PwrState 272
Dig2Pin (NID = 24h): UnsolResp 274
Dig2Pin (NID = 24h): ChSense 274
Dig2Pin (NID = 24h): ConfigDefault 275
PINOUTS AND PACKAGE INFORMATION 278
48-Pin Pinout 278
40-Pin Pinout 279
Pin Table for 48-Pin 280
Pin Table for 40-Pin 281
48QFN Package Outline and Package Dimensions 283
40QFN Package Outline and Package Dimensions 284
Pb Free Process- Package Classification Reflow Temperatures 284
DISCLAIMER 285
DOCUMENT REVISION HISTORY 286

©2014 TEMPO SEMICONDCUTOR, INC..

LIST OF FIGURES

Multi-channel capture 20
Multi-channel timing diagram 20
EAPD System level Example 24
Single Digital Microphone (data is ported to both left and right channels 26
Stereo Digital Microphone Configuration 27
Quad Digital Microphone Configuration 28
Analog PCBeep Flow Chart 30
HD Audio Bus Timing 41
Common Port Configurations 43
48-pin Package Functional Diagram 44
40-pin Package Functional Diagram 45
48-pin Package Widget Diagram 46
40-pin Package Widget Diagram 47
48-Pin Pinout 278
40-Pin Pinout 279
48QFN Package Diagram 283
40QFN Package Diagram 284

©2014 TEMPO SEMICONDCUTOR, INC..

LIST OF TABLES

Port Functionality 11
Analog Output Port Behavior 11
Resistor Tolerance 13
48 pin Jack Detect 13
40 pin Jack Detect 13
SPDIF OUT 0 or 1 Behavior 14
SPDIF Behavior 15
Power Management 17
Example channel mapping 20
EAPD Pin Mode Select 22
Control bit descriptions for BTL amplifier and Headphone amplifier enable configurations 22
BTL Amp Enable Configuration 22
EAPD Analog PC_Beep behavior 23
EAPD Behavior 23
Valid Digital Mic Configurations 25
DMIC_CLK and DMIC_0,1 Operation During Power States 25
Dig0Pin (Pin 48/40) Function Selection 33
Dig1Pin (Pin 46/38) Function Selection 33
Electrical Specification: Maximum Ratings 35
Recommended Operating Conditions 35
Analog Performance 36
Capless Headphone Supply 41
HD Audio Bus Timing 41
SPDIF Timing 42
Digital Mic timing 42
GPIO Characteristics 42
Pin Configuration Default Settings 48
High Definition Audio Widget 50
Widget Descriptions 51
48-PinTable 280
40-Pin Table 281
Reflow 284

©2014 TEMPO SEMICONDCUTOR, INC..

1. DESCRIPTION

1.1. Overview

The 92HD66B provide stereo 24- bit, full duplex resolution supporting sample rates up to 192kHz by the DAC and ADC. SPDIF outputs support sample rates of 192kHz, 96kHz, 88.2kHz, 48kHz, and 44.1kHz. SPDIF input supports 96KHz, 88.2KHz, 48KHz, and 44.1KHz sample rates. Additional sample rates are supported by the driver software.

The 92HD66B supports a wide range of desktop and laptop 4-channel configurations. The 2 independent SPDIF output interfaces provides connectivity to consumer electronic equipment or to a home entertainment system. Simultaneous HDMI and SPDIF output is possible. All inputs can be programmed with 0-30 dB gain in 10 dB steps allowing for line or microphone use of any input.

Port presence detect capabilities allow the CODEC to detect when audio devices are connected to the CODEC. The fully parametric TSI SoftEQ can be initiated upon headphone jack insertion and removal for protection of notebook speakers.

The 92HD66B operates with a 3.3V digital supply and a 5V analog supply. It allows for 1.5V and 3.3V HDA signaling; the correct signalling level is selected based on the power supply voltage on the DVDD-IO pin.

The 92HD66B is offered in a 48 or 40 pin QFN Environmental (ROHS) package.

1.2. Orderable Part Numbers

92HD66B1X5NDGXyyX	4ch, 40QFN, 1.5V HDA Signaling, 5V AVDD
92HD66B1X3NDGXyyX	4ch, 40QFN, 1.5V HDA Signaling, 3.3V AVDD
92HD66B2X5NDGXyyX	4ch, 40QFN, 3.3V HDA Signaling, 5V AVDD
92HD66B2X3NDGXyyX	4ch, 40QFN, 3.3V HDA Signaling, 3.3V AVDD
92HD66B3X5NLGXyyX	4ch, 48QFN, switchable 1.5V or 3.3V HDA Signaling, 5V AVDD
92HD66B3X3NLGXyyX	4ch, 48QFN, switchable 1.5V or 3.3V HDA Signaling, 3.3V AVDD

yy = silicon stepping/revision, contact sales for current data.
Add an “8” to the end for tape and reel delivery.

©2014 TEMPO SEMICONDCUTOR, INC..

2. DETAILED DESCRIPTION

2.1. Port Functionality

Pins (40-pin)	Pins (48-pin)	Port	Input	Output	Head phone	Mic Bias (Vref pin)	Input boost amp
22/23/32/33	29/30/39/40	A	Yes	Yes	Yes	Yes[1]	Yes
24/25/35/36	31/32/42/43	B	Yes	Yes	Yes	Yes[1]	Yes
14/15	19/20	C	Yes	Yes		Yes	Yes
-	-	D					
-	15/16	E	Yes	Yes		Yes	Yes
12/13	17/18	F	Yes	Yes	Yes		Yes
40	48	SPDIF_OUT0	Yes[2]	Yes			Yes[3]
38	46	SPDIF_OUT1	Yes[2]	Yes			Yes[3]
37	45	SPDIF_IN	Yes				
3 (CLK=2)	4 (CLK=2)	DMIC0	Yes				Yes

Table 1. Port Functionality

1. Ports A and B provide internal microphone bias on the headphone out pins. No external VrefOut pin is needed.
2. DMIC1
3. Boost amp is only available for DMIC input and is not associated with the pin widget

2.1.1. Port Characteristics

Universal (Bi-directional) jacks are supported on ports A, B, C, E (48-pin package only), and F. Ports A, B, and F are designed to drive 32 ohm (nominal) headphones or a 10K (nominal) load. Line Level outputs are intended to drive an external 10K load (nominal) and an on board shunt resistor of 20-47K (nominal). However, applications may support load impedances of 2.8K ohms and above when implementing ports capable of operating as microphone inputs or line outputs. Input ports are 75K (nominal) at the pin.

DAC full scale outputs and intended full scale input levels are greater than 1V rms at 5V (+5%/ -10%) to meet WLP requirements. Line output ports and Headphone output ports on the codec may be configured for +3dBV full scale output levels by using a vendor specific verb.

Output ports implement anti-pop circuits to prevent pops/clicks associated with turning power on/off or charging and discharging output coupling capacitors (except for cap-less headphone ports). Unused ports should be left unconnected. When updating existing designs to use the codec, ensure that there are no conflicts between the output ports on the codec and existing circuitry.

AFG Power State	Input Enable	Output Enable	Used as output for DAC/Mixer	Used as output for analog PC_Beep	Used as input for ADC, mixer	Port Behavior
D0-D2	1	1	Don’t care	Don’t care	Yes	Not allowed. Port is active as Input.
	1	1	Don’t care	Don’t care	No	Not allowed. Inactive (Power Down) - Port keeps output coupling caps charged if port uses caps.

Table 2. Analog Output Port Behavior

©2014 TEMPO SEMICONDCUTOR, INC..

AFG Power State	Input Enable	Output Enable	Used as output for DAC/Mixer	Used as output for analog PC_Beep	Used as input for ADC, mixer	Port Behavior
	1	0	NA	NA	Yes	Active - Port enabled as input
	1	0	NA	NA	No	Inactive (Power Down) - Port keeps output coupling caps charged if port uses caps.
	0	1	currently used by DAC, mixer, beep, or is traditional line or headphone output		NA	Active - Port enabled as output
	0	1	not currently used by DAC, mixer, beep, and is cap-less headphone output		NA	Inactive (Power Down)
	0	0	NA	NA		Inactive (Power Down) - Port keeps output coupling caps charged if port uses caps.
D3	1	1	NA	NA	Don't care	Not allowed. Port is active as Input.
	1	0	NA	NA	Don't care	Inactive (Power Down) - Port keeps output coupling caps charged if port uses caps.
	0	1	currently used by DAC, mixer, beep, or is traditional line or headphone output		Don't care	Low power state. If enabled, Beep will output from the port
	0	1	not currently used by DAC, mixer, beep, and is cap-less headphone output		Don't care	Inactive (Power Down)
	0	0	NA	NA	Don't care	Inactive (Power Down) - Port keeps output coupling caps charged if port uses caps.
D3cold	-	-				Inactive (Power Down) - Port keeps output coupling caps charged if port uses caps.
D4	-	-				Inactive (Power Down) - Port keeps output coupling caps charged if port uses caps.
D5	-	-				Off - Charge on coupling caps (if used) will not be maintained.

Table 2. Analog Output Port Behavior

2.2. Vref_Out

Ports A, B, C, & E (48-pin package only) support Vref_Out pins for biasing electret cartridge microphones. Settings of 80% AVDD, 50% AVDD, GND, and Hi-Z are supported. Attempting to program a pin widget control with a reserved or unsupported value will cause the associated Vref_Out pin to assume a Hi-Z state and the pin widget control Vref_En field will return a value of '000' (Hi-Z) when read.

2.3. Jack Detect

Plugs inserted to a jack are detected using SENSE inputs as described in the tables below. Per HDA015-B, the detection circuit operates when the CODEC is in D0 - D3 and can also operate if both the CODEC and Controller are in D3 (no bus clock.) Jack detection requires that all supplies (analog and digital) are active and stable. When AVDD is not present, the value reported in the pin widget is invalid.

©2014 TEMPO SEMICONDCUTOR, INC..

When the HD Audio bus is in a low power state (reset asserted and clock stopped) the CODEC will generate a Power State Change Request when a change in port connectivity is sensed and then generate an unsolicited response after the HD Audio link has been brought out of a low power state and the device has been enumerated. Per HDA015-B, this will take less than 10mS.

The following table summarizes the proper resistor tolerances for different analog supply voltages.

.

AVdd Nominal Voltage (+/- 5%)	Resistor Tolerance Pull-Up	Resistor Tolerance SENSE_A/B
4.75V or 5.0V	1%	1%

Table 3. Resistor Tolerance

Resistor	SENSE_A	SENSE_B
39.2K	PORT A	PORT E
20.0K	PORT B	Mono
10.0K	PORT C	SPDIF0/DMIC1
5.11K	PORT F	SPDIF1/DMIC1
2.49K	Pull-up to Avreg (X5) Pull-up to AVDD (X3)	Pull-up to Avreg (X5) Pull-up to AVDD (X3)

Table 4. 48 pin Jack Detect

.

Resistor	SENSE_A
39.2K	PORT A
20.0K	PORT B
10.0K	PORT C
5.11K	PORT F
2.49K	Pull-up to Avreg (X5) Pull-up to AVDD (X3)

Table 5. 40 pin Jack Detect

See reference design for more information on Jack Detect implementation.

2.4. SPDIF Output

Both SPDIF Outputs can operate at 44.1kHz, 48kHz, 88.2kHz, 96kHz and 192KHz as defined in the Intel High Definition Audio Specification with resolutions up to 24 bits. This insures compatibility with all consumer audio gear and allows for convenient integration into home theater systems and media center PCs.

Note: Peak to peak jitter is currently limited to less than 4.5nS (half of the internal master clock cycle) which does not meet the IEC-60958-3 0.05UI requirement at 192KHz.

The two SPDIF output converters can not be aligned in phase with the DACs. Even when attached to the same stream, the two SPDIF output converters may be misaligned with respect to their frame boundaries.

©2014 TEMPO SEMICONDCUTOR, INC..

Per HDA015-B, the SPDIF outputs support the ability to provide clocking information even when no stream is selected for the converter, or when in a low power state. Also, as stated in the DCN, the SPDIF output ports support port presence detect.

SPDIF Outputs are outlined in tables below. .

AFG Power State	RESET#	GPIO0 Enable	Input Enable	Output Enable	Keep Alive En	Converter Dig En	Stream ID	Pin Mode	Pin Behavior
D0-D4	Asserted (Low)	-	-	-	-	-	-		Hi-Z immediately after power on, otherwise the previous state is retained.
D0-D4	De-Asserted (High)	0	0	0	-	-	-		Hi-Z
D0-D4	De-Asserted (High)	1	-	-	-	-	-	GPIO	Active - Pin reflects GPIO0 configuration (internal pull-down enabled)
D0-D4	De-Asserted (High)	0	1	0	-	-	-	SPDIF IN or DMIC IN	Pin functions as SPDIF input or DMIC input
D0	De-Asserted (High)	0	0	1	0	0	-	SPDIF OUT	Active - Pin drives 0
						1	0		Active - Pin drives SPDIF-format, but data is zeroes
							1-15		Active - Pin drives SPDIFOut1 data
					1	0	-		Active - Pin drives SPDIF-format, but data is zeroes
						1	0		Active - Pin drives SPDIF-format, but data is zeroes
							1-15		Active - Pin drives SPDIFOut1 data
D1-D2	De-Asserted (High)	0	0	1	0	0	-		Active - Pin drives 0
					0	1	-		Active - Pin drives 0
					1	0	-		Active - Pin drives SPDIF-format, but data is zeroes
					1	1	-		Active - Pin drives SPDIF-format, but data is zeroes
D3	De-Asserted (High)	0	0	1	0	0	-		Hi-Z
					0	1	-		Hi-Z
					1	0	-		Active - Pin drives SPDIF-format, but data is zeroes
					1	1	-		Active - Pin drives SPDIF-format, but data is zeroes
D3cold	De-Asserted (High)	0	0	1	-	-	-		Hi-Z
D4	De-Asserted (High)	0	0	1	-	-	-		Hi-Z
D5	-	-	-	-	-	-	-		Hi-Z

Table 6. SPDIF OUT 0 or 1 Behavior

©2014 TEMPO SEMICONDCUTOR, INC..

2.5. SPDIF Input

SPDIF IN can operate at 44.1 KHz, 48 KHz, or 96 KHz, and implements internal Jack Sensing (Port presence Detect).

A sophisticated digital PLL allows automatic rate detection and accurate data recovery. The ability to directly accept consumer SPDIF voltage levels eliminates the need for costly external receiver ICs.

Status flags from the input stream are updated only after the entire valid block has been received (or at least when all bits of a particular status flag have been received) to ensure that software does not read an invalid mixture of old and new data.

In general, the SPDIF input block does not alter the data received. However, it is sometimes necessary to alter the data when the converter widget settings do not match the stream format. The following table outlines a few cases and the expected behavior.

Port presence detect for SPDIF_IN operates differently from other ports. Once the PLL has locked and valid framing (no errors) has been detected, then the port presence detect bit is set. In D3, and D3 without a clock, it is not possible to check for proper framing. Monitoring of activity (rising and falling edges) is sufficient to verify a change in connectivity in D3. If no clock is present, then the internal oscillator is used until a clock is restored. When the HD Audio bus is in a low power state (reset asserted and clock stopped) the CODEC will generate a Power State Change Request when a change in SPDIF_IN port connectivity is sensed and then generate an unsolicited response after the HD Audio link has been brought out of a low power state and the device has been enumerated. Per HDA015-B, this will take less than 10mS.

Conflict	Behavior	Resolution
Converter widget rate does not equal the stream rate	Although the SPDIF input block is designed to handle inputs slightly above or below the programmed rate, samples may be lost if the input rate is much higher than the rate programmed into the converter widget.	Program the converter widget with the same rate as indicated by the input stream.
Converter widget programmed for a word length less than the word length provided by the input stream	If the input stream indicates non PCM data, the data will be truncated to the requested word length. If LPCM data is indicated in the input stream, the CODEC will round the received data to the requested length.[1]	Program the converter widget with the word length indicated in the input stream.
Converter widget programmed with a word length greater than the word length provided by the input stream.	Regardless of content, 24 bits per channel of data will be transferred from the SPDIF input stream to the HD Audio bus interface. Truncation or rounding to the requested word length will be handled as described as above. Any non-zero data in the incoming stream will cause problems.	Program the converter widget with the word length indicated in the input stream. Although not recommended, application or driver software may program the converter widget with a word length of 24 bits, truncate the input to the word length indicated by the input stream, then right extend the data using 0s to the desired word length.

Table 7. SPDIF Behavior

1. Rounding may be disabled by setting the disable bit (AFG vendor specific verb -see widget list) or setting the SPDIF_IN converter widget Frmt StrmType field to 1 (non-PCM)

©2014 TEMPO SEMICONDCUTOR, INC..

2.6. Mono Output

The Mono Out port source selection, power state, and mute characteristics are all independently controlled by the mono output port controls. **The mono output pin is not available on the 40-pin package options.**

The following sources are available for the Mono Out pin:

- DAC0 Output: When selected (by using the port connection list), the DAC0 left and right outputs are summed together.
- DAC1 Output: When selected (by using the port connection list), the DAC1 left and right outputs are summed together.
- Mixer Output: When selected (by using the port connection list), the mixer left and right outputs are summed together.

The stereo inputs are scaled by -6dB and then summed to provide an output that is the average of the two inputs. The full scale output at mono out is designed to be about 0dBV. Like the stereo line and headphone outputs, it is not possible to adjust to a +3dBV output level using a vendor defined verb.

2.7. Analog Mixer

The mixer supports independent gain (-34.5 to +12dB in 1.5dB steps) on each input as well as independent mutes on each input. The following inputs are available: The output of the mixer may be sent to the ADC where the ADC record gain can adjust the volume. If the output of the mixer is sent to an analog port, then a separate volume control is provided to adjust the output volume. This mixer output volume control supports a gain range of -46.5dB to 0dB in 1.5dB steps. (Selecting -46.5dB will automatically mute the output.)

- Port A
- Port B
- Port C
- Port E (not available on 40-pin option)
- Port F
- DAC0
- DAC1

2.8. ADC Multiplexers

The codec implements 2 ADC input multiplexers. These multiplexers incorporate the ADC record gain function (-16 to +30dB gain in 1dB steps) as an output amp and allow a preselection of one of these possible inputs:

- Port A
- Port B
- Port C
- Port E (not available on 40-pin option)
- Port F
- Mixer Output
- DMIC 0
- DMIC 1

©2014 TEMPO SEMICONDCUTOR, INC..

2.10. Power Management

The HD Audio specification defines power states, power state widgets, and power state verbs. Power management is implemented at several levels. The Audio Function Group (AFG) , all converter widgets, and all pin complexes support the power state verb F05/705. Converter widgets are active in D0 and inactive in D1-D3.

The following table describes what functionality is active in each power state.

Function	D0	D1[1]	D2	D3	D3cold	Vendor Specific D4[2]	Vendor SpecificD5[2]
SPDIF Outputs	On	On	On (idle)	On (idle)[6]	Off	Off	Off
SPDIF Input	On	Off	Off	Off	Off	Off	Off
Digital Microphone inputs	On	Off	Off	Off	Off	Off	Off
DAC	On	Off	Off	Off	Off	Off	Off
D2S	On	Off	Off	Off	Off	Off	Off
ADC	On	Off	Off	Off	Off	Off	Off
ADC Volume Control	On	Off	Off	Off	Off	Off	Off
Ref ADC	On	Off	Off	Off	Off	Off	Off
Analog Clocks	On	Off	Off	Off	Off	Off	Off
GPIO pins	On	On	On	On[6]	On	On	Off
VrefOut Pins	On	On	Off	Off	Off	Off	Off
Input Boost	On	On	Off	Off	Off	Off	Off
Analog mixer	On	On	Off	Off	Off	Off	Off
Mixer Volumes	On	On	Off	Off	Off	Off	Off
Analog PC_Beep	On	On	On	On	Off	Off	Off
Digital PC_Beep	On	On	On	On[6]	Off	Off	Off
Lo/HP Amps	On	On	On	Low Drive[3]	Low Drive[3]	Low Drive[3]	Off
VAG amp	On	On	On	Low Drive[4]	Low Drive	Low Drive	Off
Port Sense	On	On	On	On[5]	Off	Off	Off
Reference Bias generator	On	On	On	On	On	On	Off
Reference Bandgap core	On	On	On	On	On	On	Off
HD Audio-Link	On	On	On	On[6]	Limited[7]	Off	Off
PLL	On	On	On	Off[8]	Off[9]	Off	Off

Table 3. Power Management

1. No DAC or ADC streams are active. Analog mixing and loop thru are supported.
2. D4 and D5 power states are entered only when D3cold is requested. D4 and D5 may be viewed as D3cold behavioral options.
3. VAG is kept active when ports are disabled or in D3/D3cold/D4. PC_Beep is supported in D3 but may be attenuated and distorted depending on load impedance.
4. VAG is always ramped up and down gradually, except in the case of a sudden power removal. VAG is active in D2/D3 but in a low power state.
5. Both AVDD and DVDD must be available for Port Sense to operate.
6. Not active if BITCLK is not running (Controller in D3), but can signal power state change request (PME)
7. Only double function group reset verbs and link reset supported per ECR15b

©2014 TEMPO SEMICONDCUTOR, INC..

8. PLL remains on if SPDIF_Out Keep Alive is enabled. PLL disabled only after DAC fading is complete and SDM has settled.
9. PLL disabled only after DAC fading is complete and SDM has settled.

The D3-default state is available for HD Audio compliance. The programmable values, exposed via vendor-specific settings, are under TSI Device Driver control for further power reduction. The analog mixer, line and headphone amps, port presence detect, and internal references may be disabled using vendor specific verbs. Use of these vendor specific verbs will cause pops.

The default power state for the Audio Function Group after reset is D3.

2.11. AFG D0

The AFG D0 state is the active state for the device. All functions are active if their power state (if they support power management at their node level) has been set to D0.

2.12. AFG D1

D1 is a lower power mode where all converter widgets are disabled. Analog mixer and port functions are active. The part will resume from theD1 to theD0 state within 1 mS.

2.13. AFG D2

The D2 state further reduces power by disabling the mixer and port functions. The port amplifiers and internal references remain active to keep port coupling caps charged and the system ready for a quick resume to either the D1 or D0 state. The part will resume from the D2 state to the D0 state within 2mS.

2.14. AFG D3

The D3-default state is available for HD Audio compliance. All converters are shut down. Port amplifiers and references are active but in a low power state to prevent pops. Resume times may be longer than those from D2, but still less than 10mS to meet Intel low power goals. The default power state for the Audio Function Group after power is applied is D3.

While in AFG D3, the HD Audio controller may be in a D0 state (HD Audio bus active) or in a D3 state (HD Audio bus held in reset with no Bit_Clk, SData_Out, or Sync activity.) The expected behavior is as follows (see the HDA015-B section for more information):

Function	HDA Bus active	HDA Bus stopped
Port Presence Detect state change	Unsolicited Response	Wake Event followed by an unsolicited response
GPIO state change	Unsolicited Response	Wake Event followed by an unsolicited response

2.14.1. AFG D3cold

The D3cold power state is the lowest power state available that does not use vendor specific verbs. While in D3cold, the CODEC will still respond to bus requests to revert to a higher power state (double AFG reset, link reset). However, audio processing, port presence detect, and other functions are disabled. Per the HD Audio bus HDA015-B, the D3cold state is intended to be used just prior to removing power to the CODEC. Typically, power will be removed within 200mS. However, the codec may exit from the D3cold state by generating 2, back-to-back, AFG reset events. Resume time from D3cold is less than 200mS.

©2014 TEMPO SEMICONDCUTOR, INC..

2.15. Vendor Specific Function Group Power States D4/D5

The codec introduces vendor specific power states. A vendor defined verb is added to the Audio Function Group that combines multiple vendor specific power control bits into logical power states for use by the audio driver. The 2 states defined offer lower power than the 5 existing states defined in the HD Audio specification and HDA015-B. The Vendor Specific D4 state provides lower digital power consumption relative to D3cold by disabling HD Audio link responses. Vendor specific D5 further reduces power consumption on the digital supply by turning off GPIO drivers, and reduces analog power consumption by turning off all analog circuitry except for reset circuits.

States D4/D5 are not entered until D3cold has been requested so are actually D3cold options rather than true, independent, power states. Software can pre-program the D4 or D5 state as a re-definition of how the part will behave when the D3cold power state is requested or software may enter D3cold, then set the D4 or D5 before performing the power state get command. The preferred method is to request D3cold, then select D4 or D5 as desired.This will reduce the severity of pops encountered when entering D4 or D5.

Both power states require a link reset or removal of DVDD to exit.

The CODEC may pop when using these verbs and transition times to an active state (D1 or D0 for example) may take several seconds.

2.16. Vendor Specific Function Group Power State “D5 Kill”

Vendor specific “D5 Kill” places the device in a low power, non responsive, state that is intended to disable the CODEC when, for security reasons, it is desired that no audio playback or recording take place.

State “D5 Kill” is not entered until D3cold has been requested. Software pre-programs both the D4 and D5 state request bits (D4 and D5 = 1) then request D3cold. After responding to the Function Group Power State Get verb (needed to enter D3cold), the CODEC will no longer respond to any link activity. The only way to exit this state is to remove power (Power on reset will set the power state to D3.)

“D5 Kill” is identical to vendor specific D5 with the exception that the CODEC will only exit this state when power is removed.

2.17. Low-voltage HDA Signaling

The codec is compatible with either 1.5V or 3.3V HDA bus signaling; in the 48-QFN package the voltage selection is done dynamically based on the input voltage of DVDD_IO.

DVDD_IO is currently not a logic configuration pin, but rather provides the digital power supply to be used for the HDA bus signals.

When in 1.5V mode, the codec can correctly decode BITCLK, SYNC, RESET# and SDO as they operate at 1.5V; additionally it will drive SDI and SDO at 1.5V. None of the GPIOs are affected, as they always function at their nominal voltage (DVDD or AVDD).

2.18. Multi-channel capture

The capability to assign multiple ADC Converters to the same stream is supported to meet the microphone array requirements of Vista and future operating systems. Single converter streams are

©2014 TEMPO SEMICONDCUTOR, INC..

still supported this is done by assigning unique non zero Stream IDs to each converter. All capture devices (ADCs 0 and 1) may be used to create a multi-channel input stream. There are no restrictions regarding digital microphones.

The ADC Converters can be associated with a single stream as long the sample rate and the bits per sample are the same. The assignment of converter to channel is done using the “CnvtrID” widget and is restricted to even values. The ADC converters will always put out a stereo sample and therefore require 2 channels per converter.

The stream will not be generated unless all entries for the targeted converters are set identically, and the total number of assigned converter channels matches the value in the NmbrChan field. These are listed the “Multi-Converter Stream Critical Entries.” table.

An example of a 4 Channel Steam with ADC0 supplying channels 0&1 and ADC1 supplying channels 2 & 3 is shown below. A 4 Channel stream can be created by assigning the same non-zero stream id “Strm= N” to both ADC0 and ADC1. The sample rates must be set the same and the number of channels must be set to 4 channels “NmbrChan = 0011”.

ADC1 CnvtrID	**(NID = 0x08)**	
	[3:0]	Ch = 2
ADC0 CnvtrID	**(NID = 0x07)**	
	[3:0]	Ch=0

Table 4. Example channel mapping

Figure 1. Multi-channel capture

The following figure describes the bus waveform for a 24-bit, 48KHz capture stream with ID set to 1.

Figure 2. Multi-channel timing diagram

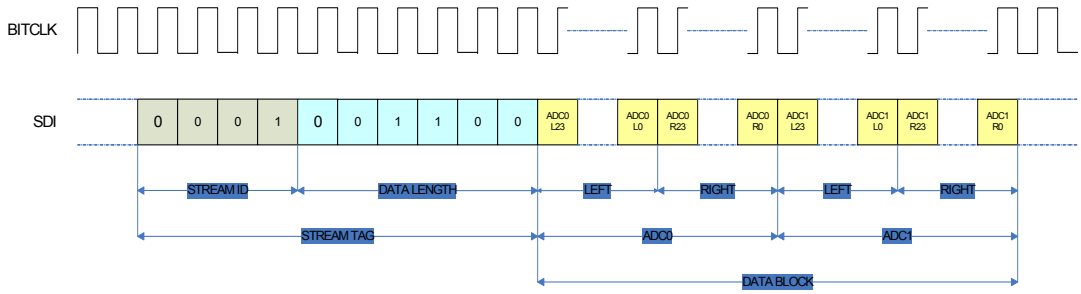

©2014 TEMPO SEMICONDCUTOR, INC..

ADC[1:0] Cnvtr	Bit Number	Sub Field Name	Description
	[15]	StrmType	Stream Type (TYPE): 0: PCM 1: Non-PCM (not supported)
	[14]	FrmtSmplRate	Sample Base Rate 0= 48kHz 1=44.1KHz
	[13:11]	SmplRateMultp	Sample Base Rate Multiple 000=48kHz/44.1kHz or less 001= x2 010= x3 (not supported) 011= x4 192kHz only, 176.4 not supported 100-111= Reserved
	[10:8]	SmplRateDiv	Sample Base Rate Divisor 000= Divide by 1 001= Divide by 2 (not supported) 010= Divide by 3 (not supported) 011= Divide by 4 (not supported) 100= Divide by 5 (not supported) 101= Divide by 6 (not supported) 110= Divide by 7 (not supported) 111= Divide by 8 (not supported)
	[6:4]	BitsPerSmpl	Bits per Sample 000= 8 bits (not supported) 001= 16 bits 010= 20 bits 011= 24 bits 100-111= Reserved
	[3:0]	NmbrChan	Number of Channels Number of channels for this stream in each “sample block” of the “packets” in each “frame” on the link. 0000=1 channel (not supported) 0001 = 2 channels … 1111= 16 channels.
	[7:4]	Strm	Software-programmable integer representing link stream ID used by the converter widget. By convention stream 0 is reserved as unused.
	[3:0]	Ch	Integer representing lowest channel used by converter. 0 and 2 are valid Entries If assigned to the same stream, one ADC must be assigned a value of 0 and the other ADC assigned a value of 2.

Table 5: Multi-channel

2.19. EAPD

The EAPD pin (pin 47) is a dedicated, bi-directional control pin. Although named External Amplifier Power Down (EAPD) by the HD Audio specification, this pin operates as an external amplifier power up signal. The EAPD value is reflected on the EAPD pin; a 1 causes the external amplifier to power up (equivalent to D0), and a 0 causes it to power down (equivalent to D3.) When the EAPD value =

©2014 TEMPO SEMICONDCUTOR, INC..

1, the EAPD pin must be placed in a state appropriate to the current power state of the associated Pin Widget even though the EAPD value (in the register) may remain 1. The pin defaults to an open-drain configuration (an external pull-up is recommended.)

Per the HD Audio specification and HDA015-B, multiple ports may control EAPD. The EAPD pin assumes the highest power state of all the EAPD bits in all of the pin complexes. The default value of EAPD is 1 (powered on), but the FG power state will override and the pin will be low.

Vendor specific verbs are available to configure this pin. These verbs retain their values across link and single function group resets but are set to their default values by power on reset:

MODE1	MODE0	EAPD Pin Function	Description
0	0	Open Drain I/O	Value at pin is wired-AND of EAPD bit and external signal.(default)
0	1	CMOS Output	Value of EAPD bit in pin widget is forced at pin
1	0	CMOS Input	External signal controls internal amps. EAPD bit in pin widget ignored
1	1	CMOS Input	External signal controls internal amps. EAPD bit in pin widget ignored

Table 6. EAPD Pin Mode Select

Control Flag	Description
EAPD PIN MODE 1:0	Defines if EAPD pin is used as input, output, or bi-directional port (Open Drain)
HP SD	0 = Amp controlled by EAPD pin only (default) / 1 = Amp controlled by power state (pin and FG) only
HP SD MODE	0 = Amp will mute when disabled (default) / 1 = Amp will shut down (enter a low power state) when disabled
HP SD INV	0 = AMP will power down (or mute) when EAPD pin is low (default) / 1 = Amp will power down (or mute) when EAPD pin is high.

Table 7. Control bit descriptions for BTL amplifier and Headphone amplifier enable configurations

HP SD	HP SD MODE	HP SD INV	EAPD Pin State	Headphone Amp State
0	0	0	0	Amplifier is mute (default[1])
0	0	0	1	Amplifier is active
0	0	1	0	Amplifier is active
0	0	1	1	Amplifier is mute
0	1	0	0	Amplifier is in a low power state
0	1	0	1	Amplifier is active
0	1	1	0	Amplifier is active
0	1	1	1	Amplifier is in a low power state
1	0	NA	NA	Amplifier follows pin/function group power state and will mute when disabled
1	1	NA	NA	Amplifier follows pin/function group power state and will enter a low power state when disabled

Table 8. BTL Amp Enable Configuration

1. EAPD bit is set to one by default but the EAPD state is 0 after power-on reset because the function group is not in D0. The state after a single or double function group reset will be compliant with HDA015-B.

Each Headphone port has its own configuration bits for SD, SD MODE, and SD INV.

©2014 TEMPO SEMICONDCUTOR, INC..

Analog BEEP enabled	EAPD Pin value[1]	Description
0	Forced to low when in D2 or D3	Follows description in HD Audio spec. External amplifier is shut down when pin or function group power state is D2 or D3 independent of value in EAPD bit.
1	Forced low in D2 or D3 unless port is enabled as output	Power state is ignored if port is enabled as output and port EAPD=1 to allow PC_Beep support in D2 and D3

Table 9. EAPD Analog PC_Beep behavior

1. When pin is enabled as Open Drain or CMOS output.

AFG Power State	RESET#	Analog PC_BEEP	Port Power State	Pin Behavior
D0-D3	Asserted (Low)	Enabled[1]	-	Active high immediately after power on, otherwise the previous state is retained across FG and link reset events
D0-D3	Asserted (Low)	Disabled	-	The previous state is retained across FG and link reset events
D0	De-Asserted (High)	-	-	Active - Pin reflects EAPD bit unless held low by external source.
D1	De-Asserted (High)	-	D0-D1	Active - Pin reflects EAPD bit unless held low by external source.
D2	De-Asserted (High)	Disabled	D0-D2	Pin forced low to disable external amp
D2	De-Asserted (High)	Enabled	D0-D2	Active - EAPD Pin high if any port EAPD bit =1 and that port also enabled as output.
D3	De-Asserted (High)	Disabled	D0-D3	Pin forced low to disable external amp
D3	De-Asserted (High)	Enabled	D0-D3	Active - EAPD Pin high if any port EAPD bit=1 and that port also enabled as output.
D3cold	De-Asserted (High)	-	-	Pin forced low to disable external amp
D4	De-Asserted (High)	-	-	Pin forced low to disable external amp
D5	De-Asserted (High)	-	-	Pin Hi-Z (off)

Table 10. EAPD Behavior

1. PC_Beep is automatically routed to ports A, B, D, and F after power-on reset while link reset is active and EAPD will be high to enable an external amplifier. This may be disabled using a vendor specific verb. If the automatic beep path is disabled, beep will still be supported with EAPD active in link reset if Analog Beep is manually enabled and at least one port is configured as an output before entering link reset. If the automatic Beep routing is disabled and Analog Beep has not been manually configured before entering link reset, then the EAPD pin will retain its current state.

©2014 TEMPO SEMICONDCUTOR, INC..

HP AUDIO CONTROL BLOCK DIAGRAM

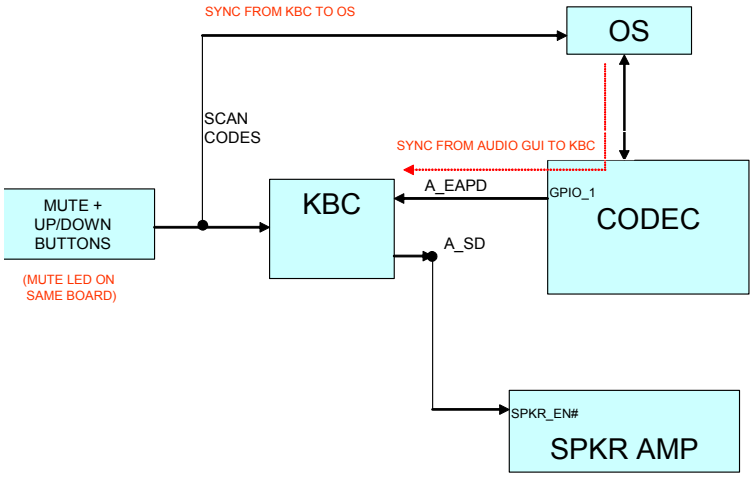

Figure 3. EAPD System level Example

2.20. Digital Microphone Support

The digital microphone interface permits connection of a digital microphone(s) to the CODEC via the DMIC0, DMIC1, and DMIC_CLK 3-pin interface. The DMIC0 and DMIC1 signals are inputs that carry individual channels of digital microphone data to the ADC. In the event that a single microphone is used, the data is ported to both ADC channels. This mode is selected using a vendor specific verb and the left time slot is copied to the ADC left and right inputs.

The DMIC_CLK output is controllable from 4.704Mhz, 3.528Mhz, 2.352Mhz, 1.176Mhz and is synchronous to the internal master clock. The default frequency is 2.352Mhz.

The two DMIC data inputs are reported as two stereo input pin widgets that incorporate a boost amplifier. The pin widgets are shown connected to the ADCs through the same multiplexors as the analog ports. Although the internal implementation is different between the analog ports and the digital microphones, the functionality is the same. In most cases, the default values for the DMIC clock rate and data sample phase will be appropriate and an audio driver will be able to configure and use the digital microphones exactly like an analog microphone.

To conserve power, the analog portion of the ADC will be turned off if the D-mic input is selected. When switching from the digital microphone to an analog input to the ADC, the analog portion of the ADC will be brought back to a full power state and allowed to stabilize before switching from the digital microphone to the analog input. This should take less than 10mS.

The DMIC capable pin widgets (NID 1Fh and NID 20h) support port presence detect using SENSE-B input on 2/3 DAC parts in a 48-pin package but not in a 40-pin package. However, the DMIC0 pin widget (NID 11h) does not support presence detect.

©2014 TEMPO SEMICONDCUTOR, INC..

Digital Mics	Data Sample	ADC Conn.	Notes
0	N/A	N/A	No Digital Microphones
1	Single Edge	0, or 1	Available on either DMIC_0 or DMIC_1 When using a microphone that supports multiplexed operation (2-mics can share a common data line), configure the microphone for “Left” and select mono operation using the vendor specific verb. “Left” D-mic data is used for ADC left and right channels.
2	Double Edge on either DMIC_0 or 1	0, or 1	Available on either DMIC_0 or DMIC_1, External logic required to support sampling on a single Digital Mic pin channel on rising edge and second Digital Mic right channel on falling edge of DMIC_CLK for those digital microphones that don’t support alternative clock edge (multiplexed output) capability.
3	Double Edge on one DMIC pin and Single Edge on the second DMIC pin.	0, or 1	Requires both DMIC_0 and DMIC_1, External logic required to support sampling on a single Digital Mic pin channel on rising edge and second Digital Mic right channel on falling edge of DMIC_CLK for those digital microphones that don’t support alternative clock edge (multiplexed output) capability. Two ADC units are required to support this configuration
4	Double Edge	0, or 1	Connected to DMIC_0 and DMIC_1, External logic required to support sampling on a single Digital Mic pin channel on rising edge and second Digital Mic right channel on falling edge of DMIC_CLK for those digital microphones that don’t support alternative clock edge capability. Two ADC units are required to support this configuration

Table 11. Valid Digital Mic Configurations

Power State	DMIC Widget Enabled?	DMIC_CLK Output	DMIC_0,1	Notes
D0	Yes	Clock Capable	Input Capable	DMIC_CLK Output is Enabled when either DMIC_0 or DMIC_1 Input Widget is Enabled. Otherwise, the DMIC_CLK remains Low
D1-D3	Yes	Clock Disabled	Input Disabled	DMIC_CLK is HIGH-Z with Weak Pull-down
D0-D3	No	Clock Disabled	Input Disabled	DMIC_CLK is HIGH-Z with Weak Pull-down
D4	-	Clock Disabled	Input Disabled	DMIC_CLK is HIGH-Z with Weak Pull-down
D5	-	Clock Disabled	Input Disabled	DMIC_CLK is HIGH-Z with Weak Pull-down

Table 12. DMIC_CLK and DMIC_0,1 Operation During Power States

©2014 TEMPO SEMICONDCUTOR, INC..

Figure 4. Single Digital Microphone (data is ported to both left and right channels

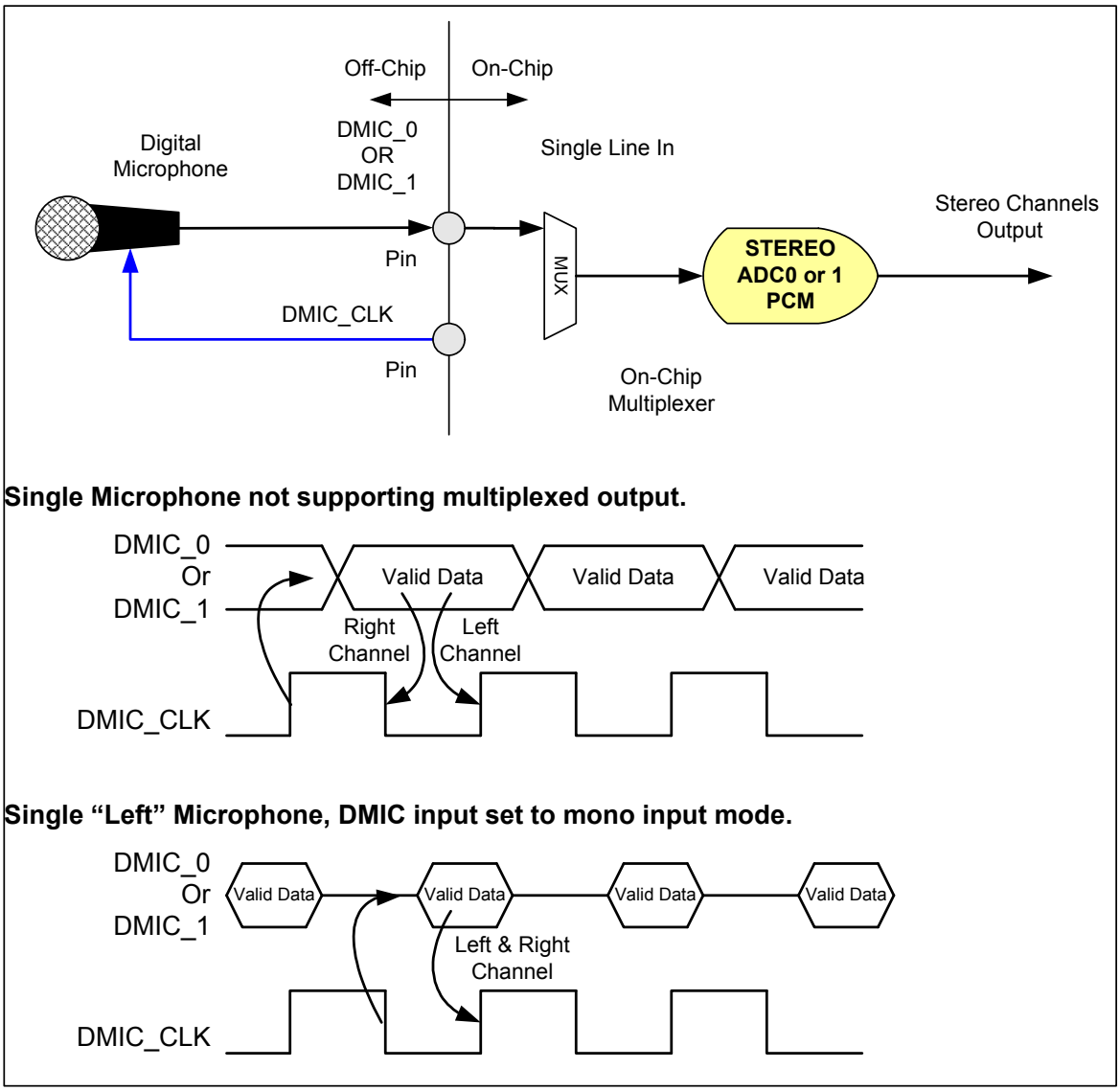

©2014 TEMPO SEMICONDCUTOR, INC..

Figure 5. Stereo Digital Microphone Configuration

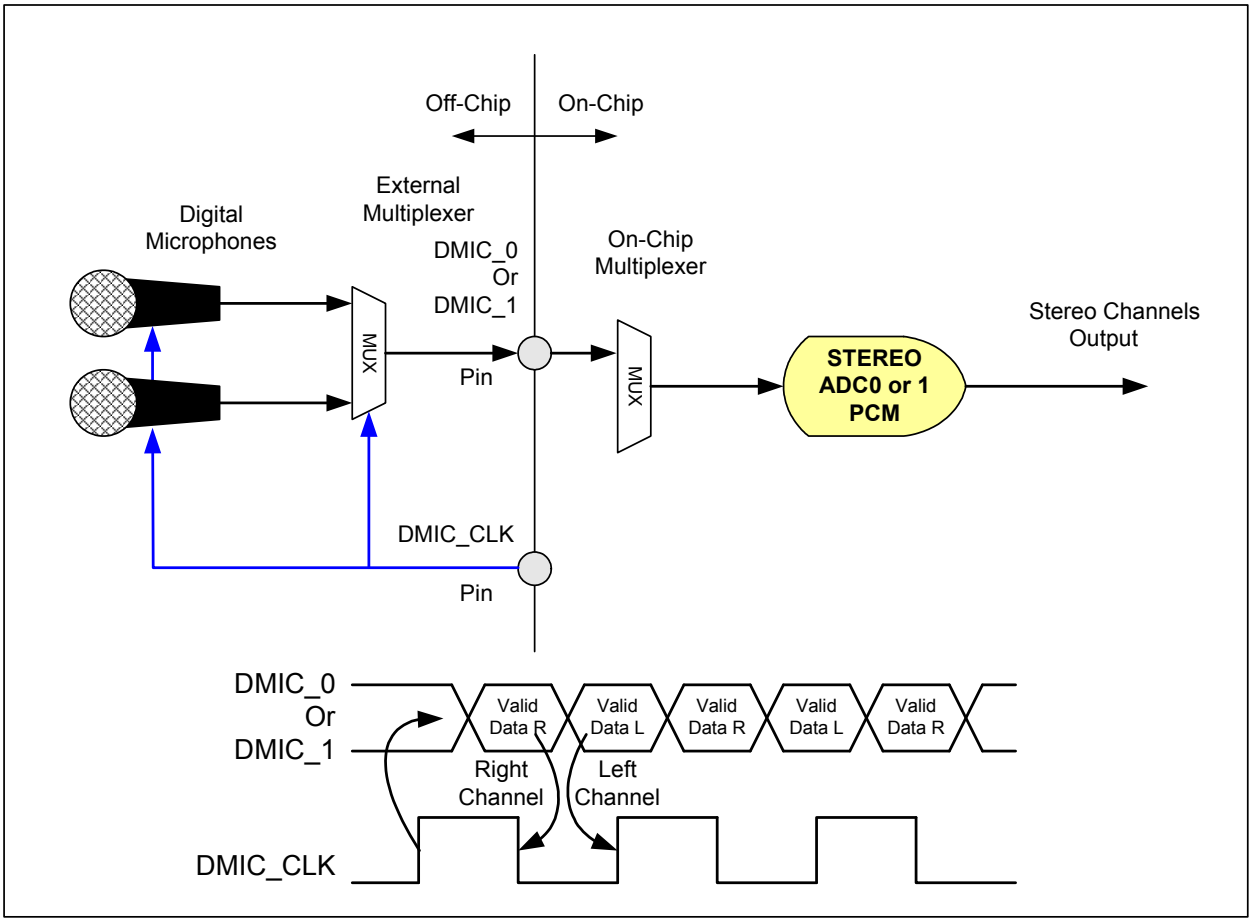

Note: Some Digital Microphone Implementations support data on either edge, therefore, the external mux may not be required.

©2014 TEMPO SEMICONDCUTOR, INC..

Figure 6. Quad Digital Microphone Configuration

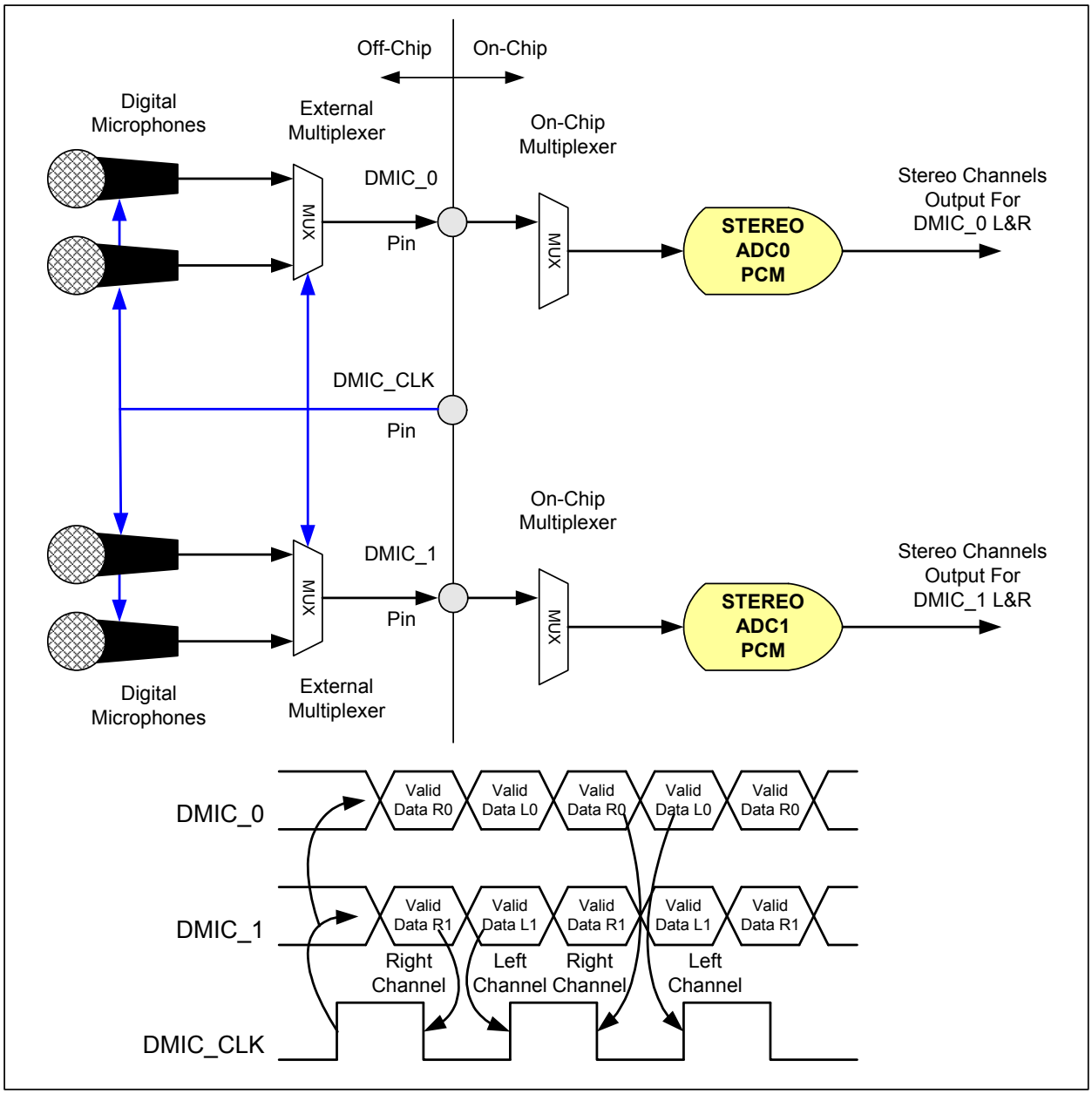

Note: Some Digital Microphone Implementations support data on either edge, in this case the external multiplexer is not required.

2.21. Analog PC-Beep

The codec supports automatic routing of the PC_Beep pin to several outputs when the HD-Link is in reset. The codec will route PC_Beep to ports A, B, and F by default when reset is applied. To prevent pops, beep is not enabled immediately when power is applied. 92HD66B will mute outputs and wait until references and amplifiers have stabilized before enabling beep pass thru after power on reset. To prevent pops when removing power, automatic routing of PC_Beep is not supported in D3cold, D4, or D5.

©2014 TEMPO SEMICONDCUTOR, INC..

Analog PC-Beep may also be supported during HD-Link Reset if analog PC_Beep is manually enabled before entering reset. Analog PC_Beep is mixed at the port and only ports enabled as outputs will pass PC_Beep. Analog PC_Beep (or a digital equivalent) must not prevent passing WLP when analog PC_Beep is enabled. Analog PC_Beep, when enabled, must not prevent other audio sources from playing (we must mix not mux.) Beeps from ICH (from Beep.sys) can have a frequency of about 37Hz to about 32KHz. Beep duration is programmable from 1mS to about 32 seconds. A typical beep under Windows XP is 500Hz or 2KHz and lasts 75ms or 150mS. Due to external XOR gates used as mixers, the idle state may be logic 0 or logic 1.

PC-Beep may be attenuated and distorted when the CODEC is in D3 depending on the load impedance seen by the output amplifier since all ports are in a low power state while in D3. Load impedances of 10K or larger can support full scale outputs but lower impedance loads will distort unless the output amplitude is reduced.

Analog PC_Beep is not supported in D3 Cold, or the vendor specific states D4/D5.

Analog PC_Beep is typically used during POST to route error beep codes to internal speakers for diagnostic purposes. When using a legacy OS such as DOS, analog PC_Beep routes “Bell” and “Alarm” tones from the south bridge to internal speakers or headphones. Keyboard controller “Keyclick” sounds are also routed to internal speakers using the analog beep function in both Windows and legacy operating systems.

2.21.1. PC_Beep Activity Monitor

An activity monitor will allow the cap-less headphone amplifiers to remain in shutdown when the function group is in D3 until the beep pin is active and then quickly change to an active state (within 10mS) to pass the beep tone.

Beep activity monitoring is only required when the analog beep path is enabled and the CODEC or amplifier is in a low power state (D3).

2.21.1.1. Input Characteristics:

- There is no correlation between frequency of the tone and duration of the tone.
- There will always be at least one complete cycle
- A minimum input level of -23dBV (200mVpp) is required for proper detection. (Inputs are typically driven by 3.3V CMOS logic followed by 12-20dB attenuation and filtering)
- Beeps from ICH (from Beep.sys) can have a frequency of about 37Hz to about 32KHz and are 1-bit (PFM)
- Beeps from the Keyboard or system management controller are typically PWM (rate unknown but typically 48KHz or less.)
- Beep duration may be from 1mS to ~32 seconds if provided by ICH under OS control.
- A typical beep under Windows XP is 500Hz or 2KHz and lasts 75ms or 150mS
- Due to external XOR gates used as mixers, the idle state may be logic 0 or logic 1

2.21.1.2. Firmware/Software Requirements:

The reconfiguration outlined in this chapter must be enabled by default (without the help of firmware or OS driver.)

This autonomous mode must not interfere with normal operation.

©2014 TEMPO SEMICONDCUTOR, INC..

Figure 7. Analog PCBeep Flow Chart

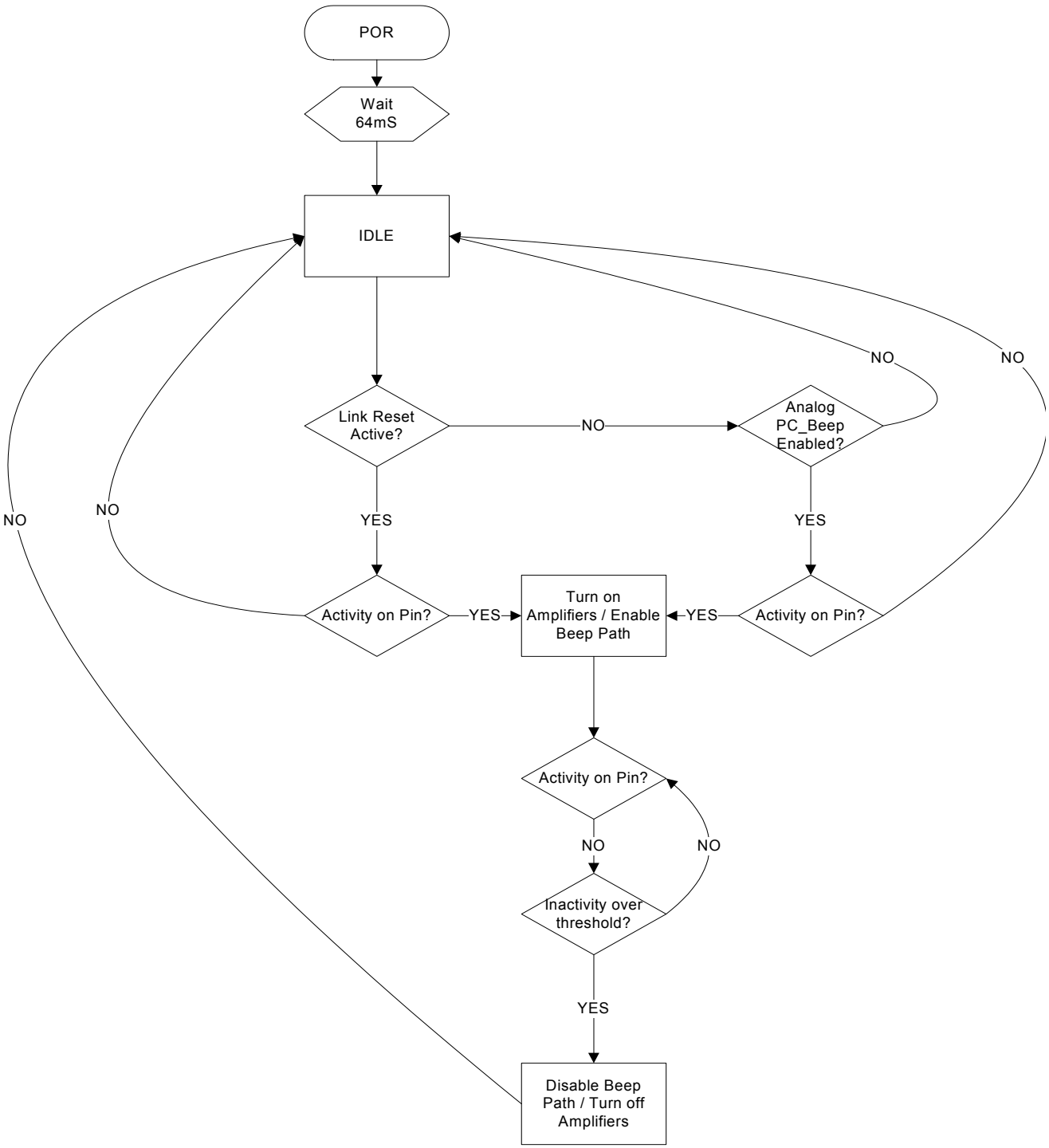

Digital detector will detect the “BEEP_SENSE” following the state machine in Figure above and output a signal called “BEEP_PRESENCE”. BEEP_PRESENCE is 1 when the state is Beep _Presence. Otherwise, it is 0.

In the 1ms window, the signal will be sampled and counted in first 500us of 1ms window. The counter will be reset during the second 500us of 1ms window. So the actual sample period is 500us. The

©2014 TEMPO SEMICONDCUTOR, INC..

main clock is typically 810KHZ. The threshold_high is 150 cycles (~37%) and the threshold_low is 30 cycles (~7.5%).

If BEEP_PRESENCE=1, it will be cleared until counter is lower than threshold in 1ms window and it repeat for N times. N(1 is for 1ms) can be programmable to one among 64ms, 64ms*2, 64ms*4 and 64ms*8.

2.21.1.3. Logic control

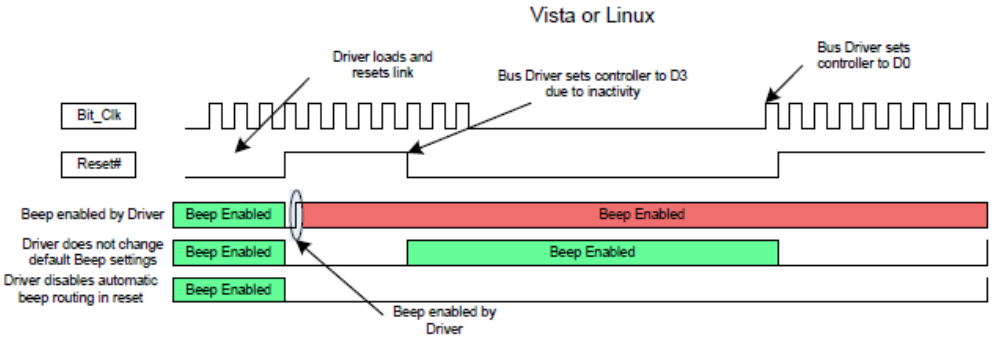

- **Phase 1:** analog beep auto-routing phase in the period after digital POR, before the first rising edge of link reset.
  - Once Analog PCbeep is detected(BEEP_PRESENCE=1) after 64ms delays (after POR), the Amplifier will be turned on(port_pwd=0, port_output_en=1, there is a timing between these two signals) and analog_beep_en=1. If BEEP_PRESENCE=0 for longer than the threshold time, the amplifiers will be turned off to save power and prevent unwanted system noise from being heard.
- **Phase 2:** When not in phase 1
  - If analog beep function is disabled by driver. Analog beep auto-detect will also be disabled.
  - If analog beep function is enabled by driver.

Once analog PCbeep is detected(BEEP_PRESENCE=1), analog pc_beep will be enabled

If in D0-D2, enabled simply means muting or un-muting beep to avoid hearing system noise on the beep input pin but it is acceptable to turn off port amplifiers if not currently used by DACs, mixer, or beep to save power.

If in D3, enabled means that the necessary amplifiers are turned on so that the beep signal may be heard on all ports configured as outputs (see analog pc-beep description section above)

All needed amplifiers are enabled until BEEP_PRESENCE=0 for longer than the idle threshold

2.22. Digital PC-Beep

This block uses an 8-bit divider value to generate the PC beep from the 48kHz HD Audio Sync pulse. The digital PC_Beep block generates the beep tone on all Pin Complexes that are currently configured as outputs. The HD Audio spec states that the beep tone frequency = (48kHz HD Audio SYNC rate) / (4*Divider), producing tones from 47 Hz to 12 kHz (logarithmic scale). Other audio sources are disabled when digital PC_Beep is active.

It should be noted that digital PC Beep is disabled if the divider = 00h.

©2014 TEMPO SEMICONDCUTOR, INC..

PC-Beep may be attenuated and distorted when the CODEC is in D3 depending on the load impedance seen by the output amplifier since all ports are in a low power state while in D3. Load impedances of 10K or larger can support full scale outputs but lower impedance loads will distort unless the output amplitude is reduced. Digital PC_Beep requires a clock to operate and the CODEC will prevent the system from stopping the bus clock while in D3 by setting the Clock_Stop_OK bit to 0 to indicate that the part requires a clock.

2.23. Headphone Drivers

The codec implements headphone capable outputs on some ports. The Microsoft Windows Logo Program allows up to the equivalent of 100ohms in series. However, an output level of +3dBV at the pin is required to support 300mV at the jack with a 32ohm load and 1V with a 320 ohm load. Microsoft allows device and system manufactures to limit output voltages to address EU safety requirements. (WLP 3.09 - please refer to the latest Windows Logo Program requirements from Microsoft.) The 92HD66B codec does not implement power limiting. Power limiting may be implemented through the use of an external series resistance.

Although 3 Headphone amplifiers are present, only two may be used simultaneously. Headphone performance will degrade if more than one port is driving a 32 ohm load.

2.24. GPIO

2.24.1. GPIO Pin mapping and shared functions

GPIO #	48 pin package	40 pin package	Supply	SPDIF In	SPDIF Out	EAPD	GPI/O	VrefOut	DMIC	Pull Up	Pull Down
0	46	38	DVDD		YES		YES		IN		50K
1	2	2	DVDD				YES		CLK		50K
2	4	3	DVDD				YES		IN		50K
3	48	40	DVDD		YES		YES		IN		50K
4	44		DVDD				YES				50K

2.24.2. Digital Microphone/GPIO Selection

2 functions are available on the DMIC_CLK/GPIO1 and the DMIC_0/GPIO2 pins. To determine which function is enabled, the order of precedence is followed:

1. If GPIOs are not enabled through the AFG, then at reset, the pins are pulled low by an internal pull-down resistor.
2. If the GPIO 1 is enabled, the 2 DMIC pins become mute (unless programmed for GPIO or SPDIF use) and pin2 becomes GPIO with an internal pull-down.
3. If GPIO2 is enabled through the AFG, pin 4 (3 on 40-pin package) becomes a GPIO and is pulled low by an internal pull-down resistor.
4. If the port is enabled as an input, the digital microphone will be used.
5. If the port is not enabled as an input or if the pin is configured as a GPIO, the digital microphone path will be mute.

©2014 TEMPO SEMICONDCUTOR, INC..

2.24.3. SPDIF_OUT/GPIO/DMIC Selection

3 functions are available on the SPDF0/GPIO3/DMIC1 and SPDF1/GPIO0/DMIC1 pins. To determine which function is enabled, the order of precedence is followed:

1. Default at power-on is SPDIF_OUT/DMIC1 for pin 48 (40) and SPDIF_OUT/DMIC1 for pin 46(38)
2. If GPIO is enabled for that pin, it overrides the SPDIF_OUT and DMIC functions for that pin.
3. If the GPIO function is not enabled for that pin, then the DMIC or SPDIF_OUT function may be enabled by setting the pin input or output enable to 1, respectively. (Setting input and output enable to 1 at the same time will only enable DMIC)

Note: If the pin selected for DMIC1 input is configured as an output or GPIO, the DMIC block will behave as if silence is present at the input.

GPIO3 Enable	Dig0Pin Input Enable	Dig0Pin Output Enable	Selected by DMIC1Vol (NID 0x12)	Function
0	0	0	NA	Unused (input)
	0	1	NA	SPDIF0 output
	1	NA	No	Unused (input)
			Yes	DMIC1 input
1	NA	NA	NA	GPIO3

Table 13. Dig0Pin (Pin 48/40) Function Selection

GPIO0 Enable	Dig1Pin Input Enable	Dig1Pin Output Enable	Selected by DMIC1Vol (NID 0x12)	Function
0	0	0	NA	Unused (input)
	0	1	NA	SPDIF1 output
	1	NA	No	Unused (input)
			Yes	DMIC1 input
1	NA	NA	NA	GPIO0

Table 14. Dig1Pin (Pin 46/38) Function Selection

2.25. HD Audio ECR 15b support

The codec implements complete support for the HDA015-B specification building on the support already present in previous products. HDA015-B features supported are:

1. Persistence of many configuration options through bus and function group reset.
2. The ability to support port presence detect in D3 even when the HD Audio bus is in a low power state (no clock.)
3. Fast resume times from low power states: 1ms D1 to D0, 2ms D2 to D0, 10mS D3 to D0.
4. Notification if persistent register settings have been unexpectedly reset.
5. SPDIF Out active in D3 (required)
6. The ability to notify the driver that a clock is necessary so entering D3 with the clock stopped is not permissible

©2014 TEMPO SEMICONDCUTOR, INC..

2.26. Digital Core Voltage Regulator

The digital core operates from 1.8V (+/- 10%). Many systems require that the CODEC use a single 3.3V digital supply, so an integrated regulator is included on die. The regulator uses pin 9, DVDD, as its voltage source. The output of the LDO is connected to pin 1 and the digital core. A 10uF capacitor must be placed on pin 1 for proper load regulation and regulator stability.

The digital core voltage regulator is only dependent on DVDD. DVDDIO may be either 3.3 or 1.5V and may precede or follow DVDD in sequence. The CODEC digital logic and I/O (unless referenced to AVDD) will operate in the absence of AVDD. DVDD and AVDD supply sequencing for the application of power and the removal of power is neither defined nor guaranteed. It is common for desktop systems to supply AVDD from the system standby supply and the CODEC will tolerate, indefinitely, the condition where AVDD is active but DVDD and DVDDIO are inactive.

2.27. Analog Core Voltage Regulator

Many systems provide only a noisy 5 volt supply that is inappropriate for analog audio so an integrated regulator is included on die to generate the core analog supply of 4.5V. The regulator uses AVDD1 as its voltage source. A 10uF capacitor must be placed on the LDO output pin for proper load regulation and regulator stability. 92HD66B may be ordered with the analog core LDO enabled (5V operation) or bypassed (3.3V operation).

2.28. Combo Jack

The codec implements a sophisticated microphone detection algorithm to differentiate between headphones and headsets when implementing 4-conductor “combo” jacks. A programmable sense window (2s to ∞) provides flexibility in managing problematic slow plug insertions and partial insertions. Programmable de-bounce, anti-pop delay, and headphone-microphone unsolicited response delay controls help ensure a robust, pleasing, experience for the end user. Support for a lanyard (“turbo”) switch using TSI’s driver further enhances combo-jack implementations by supporting many common cellular headsets.

©2014 TEMPO SEMICONDCUTOR, INC..

3. CHARACTERISTICS

3.1. Audio Fidelity

- 5V
  - DAC SNR: >95dB, A-Weighted 4.75V - 5.25V
  - ADC SNR: >90dB, A-Weighted 4.75V - 5.25V
- 3.3V
  - DAC SNR: >90dB, A-Weighted 3.3V
  - ADC SNR: >85dB, A-Weighted 3.3V

3.2. Electrical Specifications

3.2.1. Absolute Maximum Ratings

Stresses above the ratings listed below can cause permanent damage to the 92HD66B. These ratings, which are standard values for TSI commercially rated parts, are stress ratings only. Functional operation of the device at these or any other conditions above those indicated in the operational sections of the specifications is not implied. Exposure to absolute maximum rating conditions for extended periods can affect product reliability. Electrical parameters are guaranteed only over the recommended operating temperature range.

Item	Pin	Maximum Rating
Analog maximum supply voltage	AVdd	6 Volts
Digital maximum supply voltage	DVdd	5.5 Volts
	PVdd	6 Volts
VREFOUT output current		5 mA
Voltage on any pin relative to ground		Vss - 0.3V to Vdd + 0.3V
Operating temperature		0 ^{o}C to +70 ^{o}C
Storage temperature		-55 ^{o}C to +125 ^{o}C
Soldering temperature		Soldering temperature information for all available in the package section.

Table 15. Electrical Specification: Maximum Ratings

3.2.2. Recommended Operating Conditions

Parameter		Min.	Typ.	Max.	Units
Power Supplies	DVDD_Core	1.6	1.8	1.98	V
	DVDD_IO (3.3V signaling)	3.135	3.3	3.465	V
	DVDD_IO (1.5V signaling)	1.418	1.5	1.583	V
Power Supply Voltage	+ 3.3V Digital	3.135	3.3	3.465	V
	+ 4.75V Analog	4.500	4.750	5.000	V
	+ 5.0V Analog	4.750	5.000	5.250	
	+ 3.3V Analog	3.135	3.3	03.465	V
Ambient Operating Temperature		0		+70	°C
Case Temperature	T_{case}			+90	°C

Table 16. Recommended Operating Conditions

©2014 TEMPO SEMICONDCUTOR, INC..

ESD: The 92HD66B is an ESD (electrostatic discharge) sensitive device. The human body and test equipment can accumulate and discharge electrostatic charges up to 4000 Volts without detection. Even though the 92HD66B implements internal ESD protection circuitry, proper ESD precautions should be followed to avoid damaging the functionality or performance.

3.3. 92HD66B Analog Performance Characteristics

- 5V AVDD

($T_{ambient}$ = 25 ºC, AVdd = 4.75V (4.5-5.25V), DVdd = 3.3V ± 5% or 1.8V± 10%, AVss=DVss=0V; 20Hz to 20KHz swept sinusoidal input; Sample Frequency = 48 kHz; 0dB FS = 1Vrms for AVdd = 4.75V, 10KΩ//50pF load, Testbench Characterization BW: 20 Hz – 20 kHz, 0 dB settings on all gain stages)

- 3.3V AVDD

($T_{ambient}$ = 25 ºC, AVdd = 3.3V, DVdd = 3.3V ± 5% or 1.8V ± 10%, AVss=DVss=0V; 20Hz to 20KHz swept sinusoidal input; Sample Frequency = 48 kHz; 0dB FS = 0.707Vrms for AVdd = 3.3V, 10KΩ//50pF load, Testbench Characterization BW: 20 Hz – 20 kHz, 0 dB settings on all gain stages)

Parameter	**Conditions**	**AVdd**	Min	Typ	Max	Unit
Digital to Analog Converters						
Resolution		All		24		Bits
Dynamic Range[1]: PCM to All Analog Outputs	-60dB FS signal level	5V 3.3V		95 93		dB
SNR[2] - DAC to All Mono/Line-Out Ports	Analog Mixer Disabled, PCM data	5V 3.3V		98 95		dB
THD+N[3] - DAC to All Mono/Line-Out Ports	Analog Mixer Disabled, -3 dB FS Signal, PCM data	5V 3.3V		88 83		dB
SNR[2] - DAC to All Headphone Ports	Analog Mixer Disabled, 10KΩ load, PCM data	5V 3.3V		98 95		dB
THD+N[3] - DAC to All Headphone Ports	Analog Mixer Disabled, -3 dB FS Signal, 10Kv load, PCM data	5V 3.3V		88 83		dB
SNR2 - DAC to All Headphone Ports	Analog Mixer Disabled, 32Ω load, PCM data	5V 3.3V		98 95		dB
THD+N[3] - DAC to All Headphone Ports	Analog Mixer Disabled, -3 dB FS Signal, 32Ω load, PCM data	5V 3.3V		71 70		dB
Any Analog Input (ADC) to DAC Crosstalk	10KHz Signal Frequency	All	-65			dB
Any Analog Input (ADC) to DAC Crosstalk	1KHz Signal Frequency	All	-65			dB
DAC L/R crosstalk	DAC to LO or HP 20-15KHz into 10KΩ load	All	-65	70		dB
DAC L/R crosstalk	DAC to HP 20-15KHz into 32Ω load	All	-65	75		dB
Gain Error	Analog Mixer Disabled	All			0.5	dB
Interchannel Gain Mismatch	Analog Mixer Disabled	All			0.5	dB
D/A Digital Filter Pass Band[4]		All	20		21,000	Hz
D/A Digital Filter Pass Band Ripple[5]		All			0.1	+/- dB

Table 17. Analog Performance

©2014 TEMPO SEMICONDCUTOR, INC..

Parameter	Conditions	AVdd	Min	Typ	Max	Unit
D/A Digital Filter Transition Band		All	21,000		31,000	Hz
D/A Digital Filter Stop Band		All	31,000			Hz
D/A Digital Filter Stop Band Rejection[6]		All	-100			dB
D/A Out-of-Band Rejection[7]		All	-55			dB
Group Delay (48KHz sample rate)		All			1	ms
Attenuation, Gain Step Size DIGITAL		All		0.75		dB
DAC Offset Voltage		All		10	20	mV
Deviation from Linear Phase		All		1	10	deg.
Analog Outputs						
Full Scale All Mono/Line-Outs	DAC PCM Data	5V 3.3V	1.00 0.707			Vrms
Full Scale All Mono/Line-Outs	DAC PCM Data	5V 3.3V	2.83 2.00			Vp-p
All Headphone Capable Outputs	32Ω load	5V 3.3V	40 31	60 42		mW (peak)
Amplifier output impedance	Mono/Line Outputs Headphone Outputs	All		150 0.1		Ohms
External load Capacitance	Mono/Line Outputs Headphone Outputs	All			220	pF
Analog Inputs						
Full Scale Input Voltage	0dB Boost @4.75V (input voltage required for 0dB FS output)	5V 3.3V	1.05 0.71			Vrms
All Analog Inputs with boost	10dB Boost	5V 3.3V	0.320 0.225			Vrms
All Analog Inputs with boost	20dB Boost	5V 3.3V	0.105 0.071			Vrms
All Analog Inputs with boost	30dB Boost	5V 3.3V	0.032 0.023			Vrms
Boost Gain Accuracy[8]		All	-2		2	dB
Input Impedance		All		50		KΩ
Input Capacitance		All		15		pF

Table 17. Analog Performance

©2014 TEMPO SEMICONDCUTOR, INC..

Parameter	Conditions	AVdd	Min	Typ	Max	Unit
Analog Mixer						
Dynamic Range: PCM to All Analog Outputs	-60dB FS signal level Analog Beep enabled all other mixer inputs mute	5V 3.3V	90 87			dB
SNR[2] - All Line-In to all Line-Outs	All inputs unmuted, but only one driven with test signal.	5V 3.3V	85 80			dB
THD+N[3] - All Line-In to all Line-Out	0dBFS Input on one input. All others silent.	5V 3.3V	65 60			dB
SNR[2] - DAC to All Line-Out Ports	Analog Beep Enabled, PCM data. all other inputs mute	5V 3.3V	93 93			dB
SNR[2] - DAC to All Ports	Analog Mixer Enabled, PCM data all other inputs unmuted/silent	5V 3.3V	85 80			dB
THD+N[3] - DAC to All Ports	Analog Mixer Enabled, 0dB FS Signal, PCM data. all other inputs unmuted/silent	5V 3.3V	72 72			dB
Attenuation, Gain Step Size ANALOG		All	-	1.5		dB
Analog to Digital Converter						
Resolution		All		24		Bits
Full Scale Input Voltage	0dB Boost (input voltage required to generate 0dBFS per AES 17)	5V 3.3V	1.05 0.71			Vrms
Dynamic Range[1], All Analog Inputs to A/D	High Pass Filter Enabled, -60dB FS, No boost	5V 3.3V		93 87		dB
Full Scale Input Voltage	20dB Boost (input voltage required to generate 0dBFS per AES 17)	5V 3.3V	0.105 0.071			Vrms
Dynamic Range[1], All Analog Inputs to A/D	20dB Boost High Pass Filter Enabled, -60dB FS	5V 3.3V		87 83		dB
THD+N All Analog Inputs to A/D	High Pass Filter enabled, -1/-3 dB FS signal level	5V 3.3V		83 75		dB
THD+N All Analog Inputs to A/D	20dB Boost, High Pass Filter enabled, -1/-3 dB FS signal level	5V 3.3V		80 75		dB
Analog Frequency Response[9]		All	10		30,000	Hz
A/D Digital Filter Pass Band[4]		All	20		21,000	Hz
A/D Digital Filter Pass Band Ripple[5]		All			0.1	+/- dB
A/D Digital Filter Transition Band		All	21,000		31,000	Hz
A/D Digital Filter Stop Band		All	31,000			Hz
A/D Digital Filter Stop Band Rejection[6]		All	-100			dB
Group Delay	48 KHz sample rate	All			1	ms

Table 17. Analog Performance

©2014 TEMPO SEMICONDCUTOR, INC..

Parameter	Conditions	AVdd	Min	Typ	Max	Unit
Any unselected analog Input to ADC Crosstalk	10KHz Signal Frequency	All	-65			dB
Any unselected analog Input to ADC Crosstalk	1KHz Signal Frequency	All	-65			dB
ADC L/R crosstalk	Any selected input to ADC 20-15Khz	All	-65			dB
DAC to ADC crosstalk	Any DAC output to ADC 20-15Khz	All	-65			dB
Spurious Tone Rejection[10]		All		-100		dB
Attenuation, Gain Step Size (analog)		All		1.5		dB
Interchannel Gain Mismatch ADC		All			0.5	dB
Power Supply						
Digital Vreg Core Input Voltage			2.8	3.3	3.8	V
Digital Vreg Core Output Voltage			1.65	1.8	1.95	V
Digital Core Vreg Output Current			35	50		mA
Power Supply Rejection Ratio	10kHz	All		-60		dB
Power Supply Rejection Ratio	1kHz	All		-70		dB
D0 Didd[11]	3.3V, 1.8V			25		mA
D0 Aidd[11]	5V, 3.3V			60		mA
D0 Didd[12]	3.3V, 1.8V			20		mA
D0 Aidd[12]	5V, 3.3V			34		mA
D1 Didd[13]	3.3V, 1.8V			7		mA
D1 Aidd[13]	5V, 3.3V			30		mA
D2 Didd	3.3V, 1.8V			7		mA
D2 Aidd	5V, 3.3V			15		mA
D3 (Beep enabled) Didd[14]	3.3V, 1.8V			2		mA
D3 (Beep enabled) Aidd[13]	5V, 3.3V			7		mA
D3 Didd[13]	3.3V, 1.8V			2		mA
D3 Aidd[13]	5V, 3.3V			5		mA
D3cold Didd[13]	3.3V, 1.8V			1		mA
D3cold Aidd[13]	5V, 3.3V			5		mA
Vendor D4 Didd	3.3V, 1.8V			0.4		mA
Vendor D4 Aidd	5V, 3.3V			5		mA
Vendor D5 Didd	3.3V, 1.8V			0.4		mA
Vendor D5 Aidd	5V, 3.3V			0.6		mA
One Stereo ADC Didd	3.3V, 1.8V			4		mA
One Stereo ADC Aidd	5V, 3.3V			8		mA

Table 17. Analog Performance

©2014 TEMPO SEMICONDCUTOR, INC..

Parameter	Conditions	AVdd	Min	Typ	Max	Unit
One Stereo DAC Didd	3.3V, 1.8V			4		mA
One Stereo DAC Aidd	5V, 3.3V			6		mA
Voltage Reference Outputs						
VREFOut[15]		All	-	0.5 X AVdd		V
VREFOut Drive[16]		All		1.6		mA
VREFILT (VAG)		All		0.45 X AVdd		V
Phased Locked Loop						
PLL lock time		All		96	200	usec
PLL (or Azalia Bit CLK) 24MHz clock jitter		All		150	500	psec
ESD / Latchup						
IEC1000-4-2		All	1			Level
JESD22-A114-B		All	2			Class
JESD22-C101		All	4			Class

Table 17. Analog Performance

1.Dynamic Range is the ratio of the full scale signal to the noise output with a -60dBFS signal as defined in AES17 as SNR in the presence of signal and outlined in AES6id, measured “A weighted” over 20 Hz to 20 kHz bandwidth.
2.Ratio of Full Scale signal to idle channel noise output is measured “A weighted” over a 20 Hz to a 20 kHz bandwidth. (AES17-1991 Idle Channel Noise or EIAJ CP-307 Signal-to-noise Ratio).
3.THD+N ratio as defined in AES17 and outlined in AES6id,non-weighted, swept over 20 Hz to 20 kHz bandwidth as required by WLP 3.09. Results at the jack are dependent on external components and will likely be 1 - 2dB worse.
4.48 kHz or 44.1 kHz Sample Frequency. -1dB upper band limit. -3dB lower band limit.
5.Peak-to-Peak Ripple over Passband meets ± 0.125dB limits, 48 kHz or 44.1 kHz Sample Frequency. 1dB limit.
6.Stop Band rejection determines filter requirements. Out-of-Band rejection determines audible noise.
7.The integrated Out-of-Band noise generated by the DAC process, during normal PCM audio playback, over a bandwidth 28.8 to 100 kHz, with respect to a 1 Vrms DAC output.
8.Boost gain may be within +/-2dB of target, but actual gain will always ensure that the WLP FSIV requirement will be met and that the boost implementation will not interfere with the +/-0.5dB gain accuracy for the ADC record gain as exposed in the ADC mux widget.
9.± 1dB limits for Line Output & 0 dB gain, at -20dBV
10.Spurious tone rejection is tested with ADC dither enabled and compared to ADC performance without dither.
11.All functions/converters active, pin complexes enabled, two FDX streams, line (10Kohm) loads. Add 24mA analog current per stereo 32 ohm headphone.
12.One stereo DAC and corresponding pin widgets enabled (playback mode)
13.Mixer enabled
14.Idle measurement D3 set for minimum clicks/pops (biases and min. amps. on)
15.Can be set to 50% or 80% of AVdd.
16.Designed to mimic 80% and 50% of 3.3V. 80% setting is nominal 2.6V, 50% setting is nominal 1.6V

©2014 TEMPO SEMICONDCUTOR, INC..

3.4. Capless Headphone Supply Characteristics

Parameter	Min	Typ	Max	Unit
LDO idle current		1	2	mA
Capless Headphone Amp idle current		2	3	
Charge Pump idle current		4	6	mA
Charge Pump shutdown time		1		mS
Charge Pump start-up time		10		mS
Frequency		384		KHz
C1/C2 cap value		2.2		uF

Table 18. Capless Headphone Supply

3.5. AC Timing Specs

3.5.1. HD Audio Bus Timing

Parameter	Definition	Symbol	Min	Typ	Max	Units
BCLK Frequency	Average BCLK frequency		23.9976	24.0	24.0024	Mhz
BCLK Period	Period of BCLK including jitter	Tcyc	41.163	41.67	42.171	ns
BCLK High Phase	High phase of BCLK	T_high	17.5		24.16	ns
BCLK Low Phase	Low phase of BCLK	T_low	17.5		24.16	ns
BCLK jitter	BCLK jitter			150	500	ps
SDI delay	Time after rising edge of BCLK that SDI becomes valid	T_tco	3		11	ns
SDO setup	Setup for SDO at both rising and falling edges of BCLK	T_su	5			ns
SDO hold	Hold for SDO at both rising and falling edges of BCLK	T_h	5			ns

Table 19. HD Audio Bus Timing

Figure 8. HD Audio Bus Timing

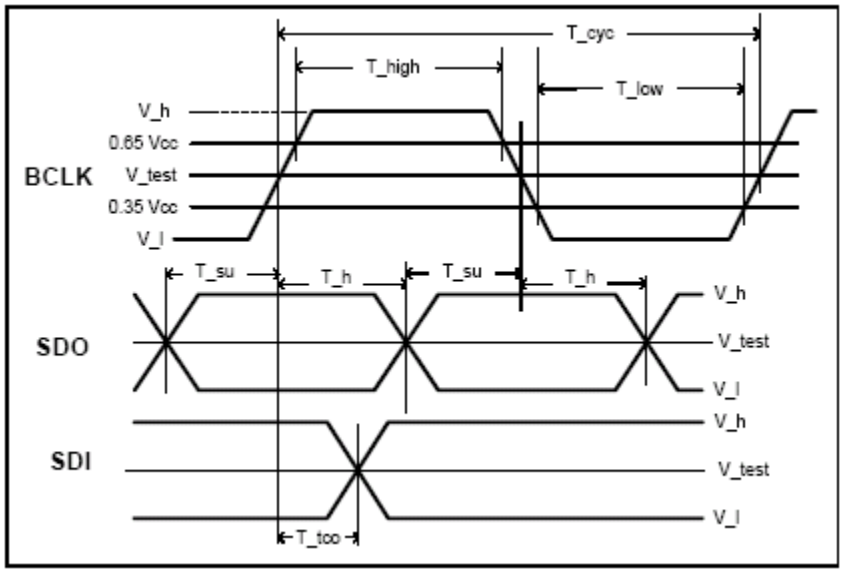

©2014 TEMPO SEMICONDCUTOR, INC..

3.5.2. SPDIF Timing

Parameter	Definition	Symbol	Min	Typ	Max	Units
SPDIF_OUT Frequency	highest rate of encoded signal 64 times the sample rate		2.8224	3.072	12.288	MHz
SPDIF_OUT unit interval	1/(128 times the sample rate)	UI	177.15	162.76	40.69	ns
SPDIF_OUT jitter	SPDIF_OUT jitter				4.43	ns
SPDIF_OUT rise time		T_rise			15	ns
SPDIF_OUT fall time		T_fall			15	ns

Table 20. SPDIF Timing

3.5.3. Digital Microphone Timing

Parameter	Definition	Symbol	Min	Typ	Max	Units
DMIC_CLK Frequency	Average DMIC_CLK frequency		1.176	2.352	4.704	MHz
DMIC_CLK Period	Period of DMIC_CLK	Tdmic_cyc	850.34	425.17	212.59	ns
DMIC_CLK jitter	DMIC_CLK jitter				5000	ps
DMIC Data setup	Setup for the microphone data at both rising and falling edges of DMIC_CLK	Tdmic_su	5			ns
DMIC Data hold	Hold for the microphone data at both rising and falling edges of DMIC_CLK	Tdmic_h	5			ns

Table 21. Digital Mic timing

3.5.4. GPIO Characteristics

Parameter	Definition	Symbol	Min	Typ	Max	Units
Input High Voltage	input level at or above which a 1 is reliably recorded	Vih	0.6 x VDD			V
Input Low Voltage	input level at or below which a 0 is reliably recorded VDD may be DVDD or AVDD	Vil			0.35 x VDD	V
Output High Voltage	iout = 4mA VDD may be DVDD or AVDD depending on pin	Voh	0.9 x VDD			V
Output Low Voltage	iout = -4mA VDD may be DVDD or AVDD depending on pin	Vol			0.1 x VDD	V
Input rise/fall time	transition time between 10% and 90% of supply	T_rise/T_fall			10	ns
Input/Tristate High Leakage Current	Vin = VDD VDD may be DVDD or AVDD depending on pin (does not include pull-up or pull-down resistor if present)			0.5		uA
Input/Tristate Low Leakage Current	Vin = 0 VDD may be DVDD or AVDD depending on pin (does not include pull-up or pull-down resistor if present)			-50		uA

Table 22. GPIO Characteristics

©2014 TEMPO SEMICONDCUTOR, INC..

4. COMMON PORT CONFIGURATIONS

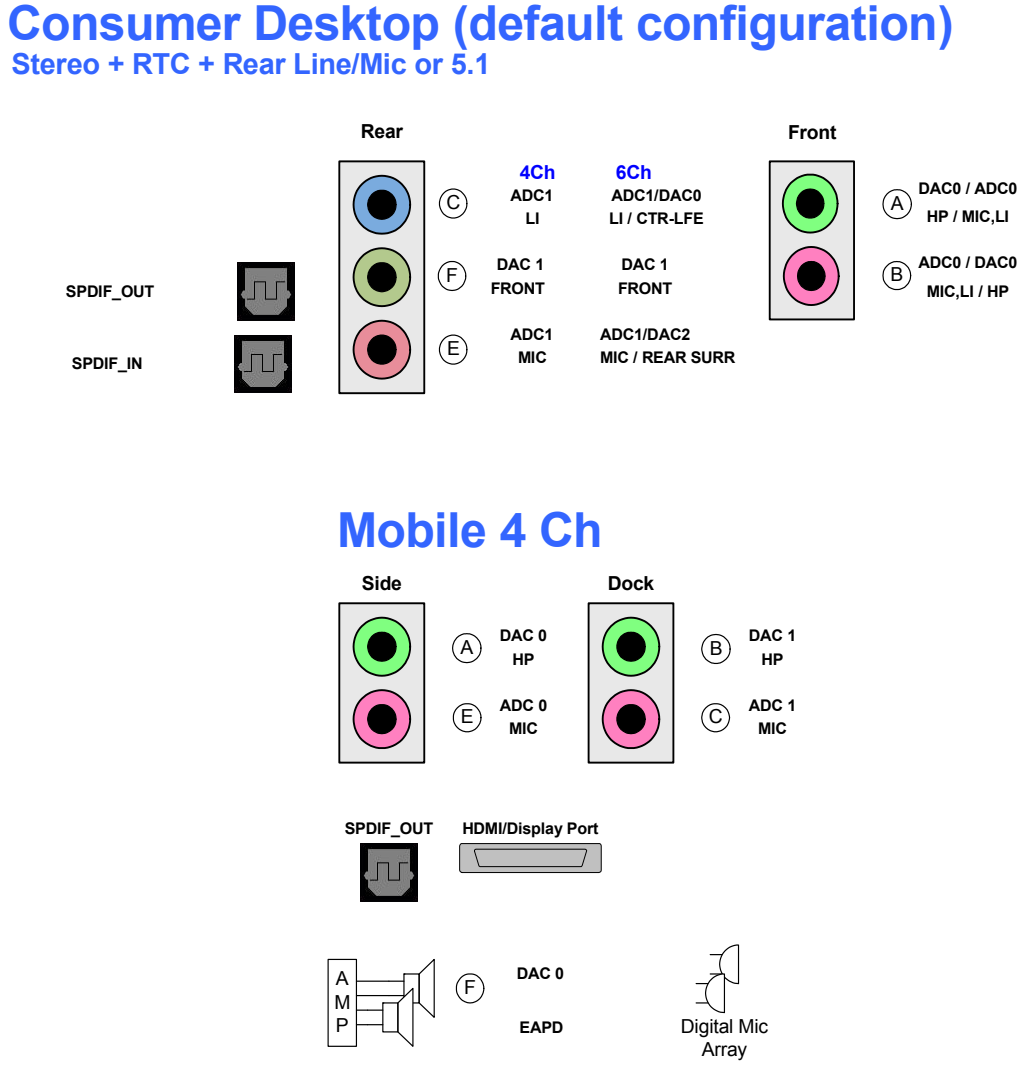

Figure 9. Common Port Configurations

©2014 TEMPO SEMICONDCUTOR, INC..

5. FUNCTIONAL DIAGRAMS

5.1. 48-pin Package

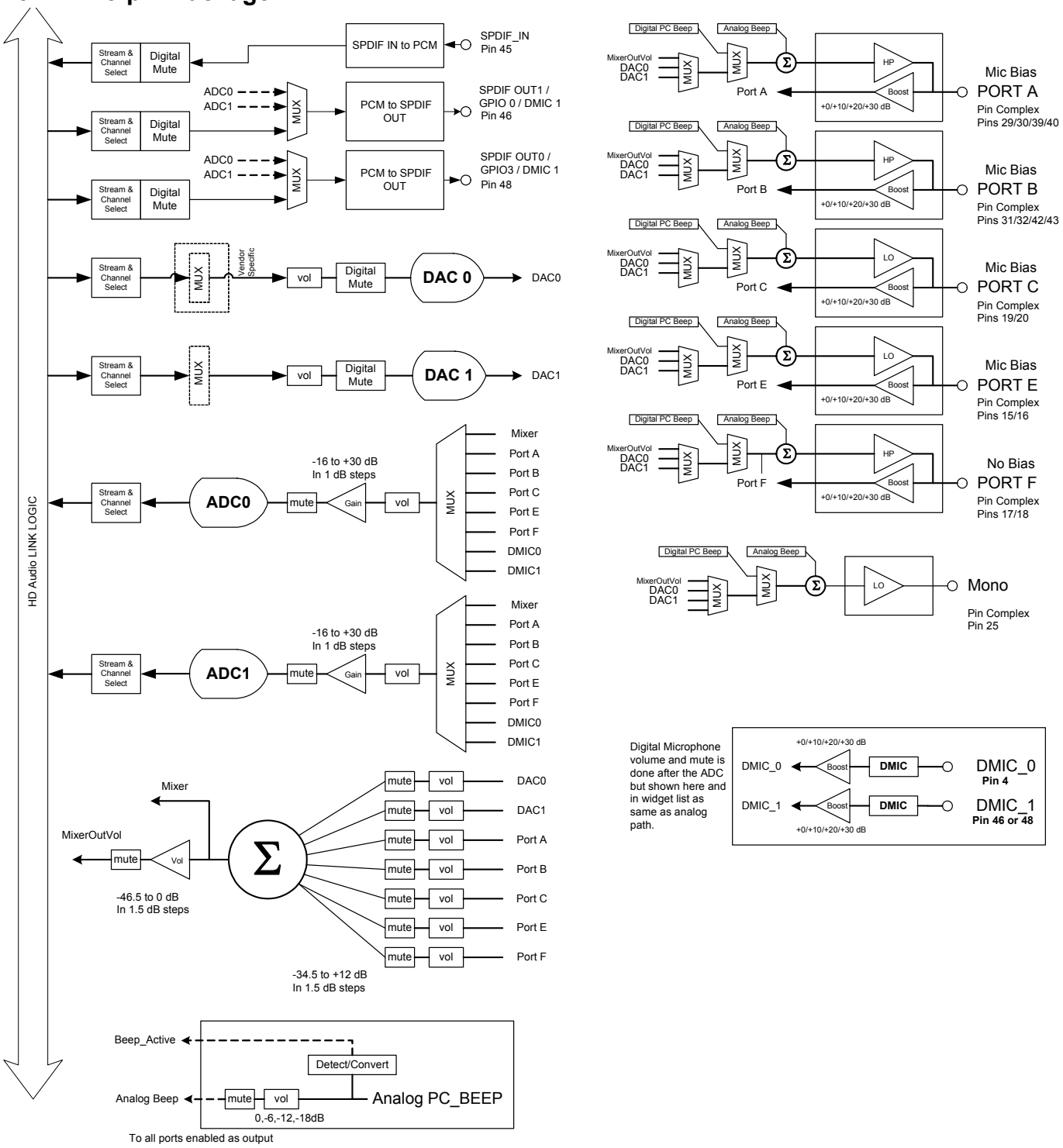

Figure 10. 48-pin Package Functional Diagram

©2014 TEMPO SEMICONDCUTOR, INC..

5.2. 40-pin Package

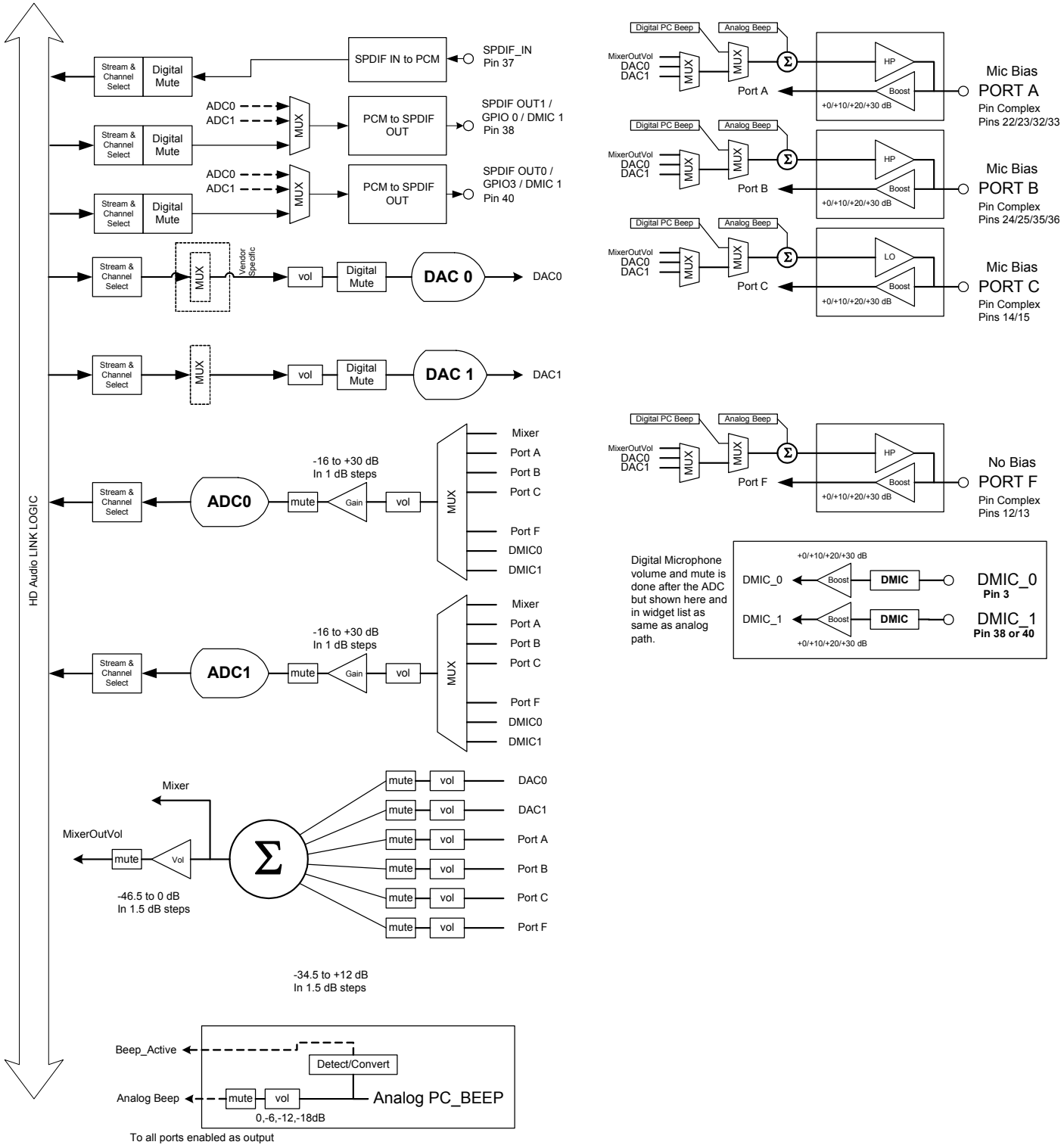

Figure 11. 40-pin Package Functional Diagram

©2014 TEMPO SEMICONDCUTOR, INC..

5.3. 48-pin Package Widget Diagram

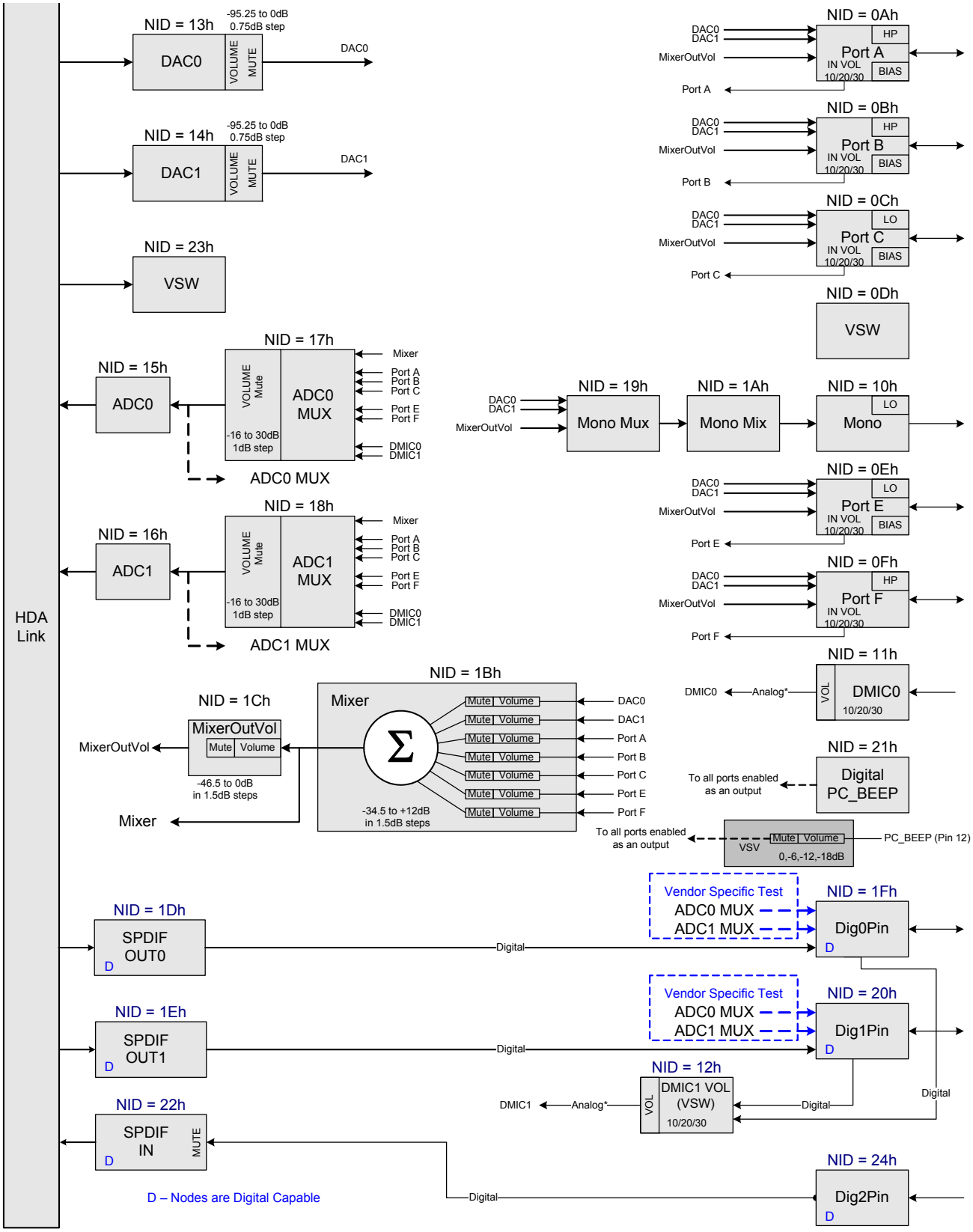

Figure 12. 48-pin Package Widget Diagram

©2014 TEMPO SEMICONDCUTOR, INC..

5.4. 40-pin Package Widget Diagram

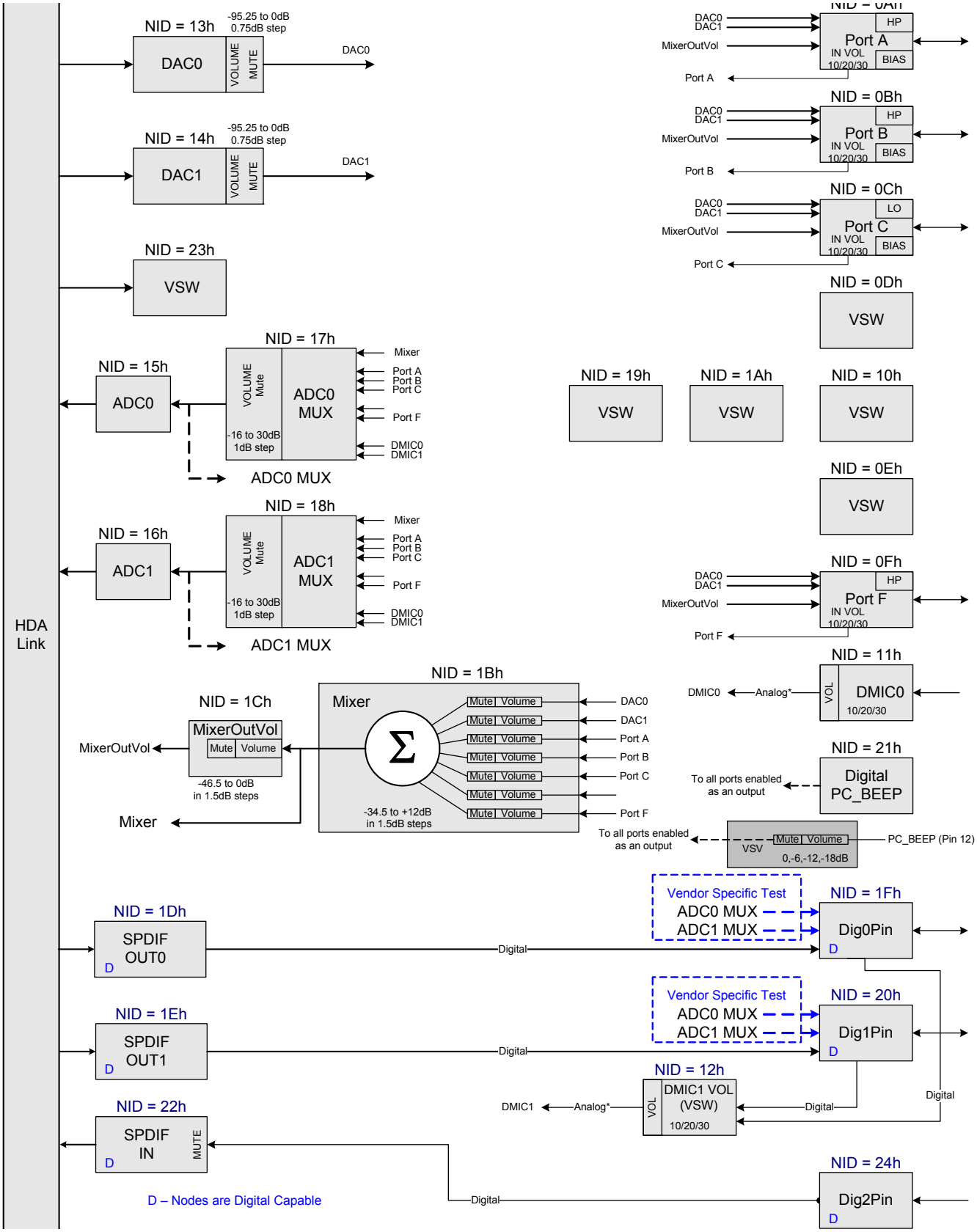

Figure 13. 40-pin Package Widget Diagram

©2014 TEMPO SEMICONDCUTOR, INC..

5.5. 48-Pin Configuration Default Register Settings

The following table shows the Pin Widget Configuration Default settings. Consumer Desktop 5-jack implementation with 2 jacks in front and 3 jacks in rear. The front panel headphone and mic are dedicated to RTC as suggested by Microsoft. SPDIF_OUT is implemented as an SPDIF optical out jack. SPDIF_In is implemented as an optical input. Digital Microphones are listed as part of the muxed capture device.

Pin Name	Port	Location	Device	Connection	Color	Misc	Assoc.	Seq
PortAPin	Jack 00b	Main Front 2h	HP Out 2h	1/8 inch Jack 1h	Green 4h	Jack Detect Override=0	1h	0h
PortBPin	Jack 00b	Main Front 2h	Mic In Ah	1/8 inch Jack 1h	Pink 9h	Jack Detect Override=0	2h	0h
PortCPin	Jack 00b	Main Rear 1h	Line In 8h	1/8 inch Jack 1h	Blue 3h	Jack Detect Override=0	4h	Eh
PortEPin	Jack 00b	Main Rear 1h	Mic In Ah	1/8 inch Jack 1h	Pink 9h	Jack Detect Override=0	4h	0h
PortFPin	Jack 00b	Main Rear 1h	Line Out 0h	1/8 inch Jack 1h	Green 4h	Jack Detect Override=0	3h	0h
MonoOutPin	No Connect 01b	NA 000000b	Other Fh	Unknown 0h	Unknown 0h	Jack Detect Override=0	Fh	0h
DMIC0Pin	Internal 10b	Internal 010000b	Mic In Ah	ATAPI 3h	Unknown 0h	Jack Detect Override=1	4h	1h
Dig0Pin	Jack 00b	Main Rear 000001b	SPDIF Out 4h	optical 5h	Black 1h	Jack Detect Override=1	5h	0h
Dig1Pin	Jack 10b	Internal 011000b	Digital Other Out 5h	Other Digital 6h	Unknown 0h	Jack Detect Override=1	6h	0h
Dig2Pin	Jack 00b	Main Rear 000001b	SPDIF IN Ch	optical 5h	Gray 2h	Jack Detect Override=0	7h	0h

Table 28. Pin Configuration Default Settings

©2014 TEMPO SEMICONDCUTOR, INC..

5.6. 40-Pin Configuration Default Register Settings

The following table shows the Pin Widget Configuration Default settings. Common Desktop 4-jack implementation with 2 jacks in front and 2 jacks in rear. The front panel headphone and mic are dedicated to RTC as suggested by Microsoft. SPDIF_OUT is implemented as an SPDIF optical out jack. SPDIF_In is implemented as an optical input. Digital Microphones are listed as part of the muxed capture device.

Pin Name	Port	Location	Device	Connection	Color	Misc	Assoc.	Seq
PortAPin	Jack 00b	Main Front 2h	HP Out 2h	1/8 inch Jack 1h	Green 4h	Jack Detect Override=0	1h	0h
PortBPin	Jack 00b	Main Front 2h	Mic In Ah	1/8 inch Jack 1h	Pink 9h	Jack Detect Override=0	2h	0h
PortCPin	Jack 00b	Main Rear 1h	Line In 8h	1/8 inch Jack 1h	Blue 3h	Jack Detect Override=0	4h	Eh
PortFPin	Jack 00b	Main Rear 1h	Line Out 0h	1/8 inch Jack 1h	Green 4h	Jack Detect Override=0	3h	0h
DMIC0Pin	Internal 10b	Internal 010000b	Mic In Ah	ATAPI 3h	Unknown 0h	Jack Detect Override=1	4h	1h
Dig0Pin	Jack 00b	Main Rear 000001b	SPDIF Out 4h	optical 5h	Black 1h	Jack Detect Override=1	5h	0h
Dig1Pin	Jack 10b	Internal 011000b	Digital Other Out 5h	Other Digital 6h	Unknown 0h	Jack Detect Override=1	6h	0h
Dig2Pin	Jack 00b	Main Rear 000001b	SPDIF IN Ch	optical 5h	Gray 2h	Jack Detect Override=0	7h	0h

©2014 TEMPO SEMICONDCUTOR, INC..

6. WIDGET INFORMATION

6.1. Widget List

Node ID	48-Pin Package	40-Pin Package
00h	Root	Root
01h	AFG	AFG
0Ah	Port A	Port A
0Bh	Port B	Port B
0Ch	Port C	Port C
0Dh	VSW	VSW
0Eh	Port E	VSW
0Fh	Port F	Port F
10h	Mono Out	VSW
11h	DMIC0	DMIC0
12h	VSW (DMIC1 VOL)	VSW (DMIC1 VOL)
13h	DAC0	DAC0
14h	DAC1	DAC1
15h	ADC0	ADC0
16h	ADC1	ADC1
17h	ADC0Mux	ADC0Mux
18h	ADC1Mux	ADC1Mux
19h	MonoMux	VSW
1Ah	MonoMix	VSW
1Bh	Mixer	Mixer
1Ch	MixerOutVol	MixerOutVol
1Dh	SPDIFOut0	SPDIFOut0
1Eh	SPDIFOut1	SPDIFOut1
1Fh	Dig0Pin	Dig0Pin
20h	Dig1Pin	Dig1Pin
21h	DigBeep	DigBeep
22h	SPDIFIN	SPDIFIN
23h	VSW	VSW
24h	Dig2Pin	Dig2Pin

Table 29. High Definition Audio Widget

©2014 TEMPO SEMICONDCUTOR, INC..

6.2. Widget Descriptions

Widget Name	Description
Root	Root Node
AFG	Audio Function Group
Port X	Port X (A, B, Etc.) Pin Widget
Port MonoOut	Port MonoOut Pin Widget (output only)
DigMic N	Digital Microphone Pin Widget (N represents the instance)
DACN	Stereo Output Converter to DAC (N represents the instance)
ADCN	Stereo Input Converter to ADC (N represents the instance)
ADCNMux	ADC N Mux with volume and mute
Mono Mux	Mono output source select
Mono Mix	Stereo to mono conversion
Mixer	Input/Output Mixer (Input Ports, DACs)
MixerOutVol	Volume control for analog mixer
SPDIFOutN	Digital Output Converter for SPDIF_Out (N represents the instance)
DigNPin	Digital I/O Pin for SPDIF In/Out (N represents the instance)
PCBeep	Digital PC Beep Widget
InPortNMux	Input port pre-select for mixer (N represents the instance)
VSWN	Vendor Specific Widget (N represents the instance)

Table 30. Widget Descriptions

6.3. Widget Details

Detailed widget information will be provided in a future datasheet update.

6.4. Device IDs

92HD66B1X5NDGXyyX	4ch, 40QFN, 1.5V HDA Signaling, 5V AVDD	76E8h
92HD66B1X3NDGXyyX	4ch, 40QFN, 1.5V HDA Signaling, 3.3V AVDD	76EEh
92HD66B2X5NDGXyyX	4ch, 40QFN, 3.3V HDA Signaling, 5V AVDD	76E9h
92HD66B2X3NDGXyyX	4ch, 40QFN, 3.3V HDA Signaling, 3.3V AVDD	76EFh
92HD66B3X5NLGXyyX	4ch, 48QFN, switchable 1.5V or 3.3V HDA Signaling, 5V AVDD	76EAh
92HD66B3X3NLGXyyX	4ch, 48QFN, switchable 1.5V or 3.3V HDA Signaling, 3.3V AVDD	76F0h

©2014 TEMPO SEMICONDCUTOR, INC..

6.5. Reset Key

Abbreviation	Description
POR	Power On Reset.
SAFG	Single AFG Reset - One single write to the Reset Verb in the AFG Node.
DAFG	Double AFG Reset - Two consecutive Single AFG Resets with only idle frames (if any) and no Link Resets between.
S&DAFG	Single And Double AFG Reset - Either one will cause reset.
LR	Link Reset - Level sensitive reset anytime the HDA Reset is set low.
ELR	Exiting Link Reset - Edge sensitive reset any time the HDA Reset transitions from low to high.
ULR	Unexpected Link Reset - Level sensitive reset anytime the HDA Reset is set low when the ClkStopOK indicator is currently set to 0.
PS	Power State Change - Reset anytime the Actual Power State changes for the Widget in question.

6.6. Root (NID = 00h): VendorID

Reg	Byte 4 (Bits 31:24)	Byte 3 (Bits 23:16)	Byte 2 (Bits 15:8)	Byte 1 (Bits 7:0)
Set				
Get	F0000h			

Field Name	Bits	R/W	Default	Reset
Vendor	31:16	R	111Dh	N/A
	Vendor ID.			
DeviceFix	15:8	R	see below	N/A
	Device ID.			
DeviceProg	7:0	R	see below	N/A
	Device ID.			

Device	92HD66B1X5	92HD66B2X5	92HD66B3X5	92HD66B1X3	92HD66B2X3	92HD66B3X3
Device ID	76E8h	76E9h	76EAh	76EEh	76EFh	76F0h

©2014 TEMPO SEMICONDCUTOR, INC..

6.4.1. Root (NID = 00h): RevID

Reg	Byte 4 (Bits 31:24)	Byte 3 (Bits 23:16)	Byte 2 (Bits 15:8)	Byte 1 (Bits 7:0)
Set				
Get	F0002h			

Field Name	Bits	R/W	Default	Reset
Rsvd	31:24	R	00h	N/A (Hard-coded)
	Reserved.			
Major	23:20	R	1h	N/A (Hard-coded)
	Major rev number of compliant HD Audio spec.			
Minor	19:16	R	0h	N/A (Hard-coded)
	Minor rev number of compliant HD Audio spec.			
RevisionFix	15:12	R	xh	N/A (Hard-coded)
	Vendor's rev number for this device.			
RevisionProg	11:8	R	xh	N/A (Hard-coded)
	Vendor's rev number for this device.			
SteppingFix	7:4	R	xh	N/A (Hard-coded)
	Vendor stepping number within the Vendor RevID.			
SteppingProg	3:0	R	xh	N/A (Hard-coded)
	Vendor stepping number within the Vendor RevID.			

6.4.2. Root (NID = 00h): NodeInfo

Reg	Byte 4 (Bits 31:24)	Byte 3 (Bits 23:16)	Byte 2 (Bits 15:8)	Byte 1 (Bits 7:0)
Set				
Get	F0004h			

Field Name	Bits	R/W	Default	Reset
Rsvd2	31:24	R	00h	N/A (Hard-coded)
	Reserved.			

©2014 TEMPO SEMICONDCUTOR, INC..

Field Name	Bits	R/W	Default	Reset
StartNID	23:16	R	01h	N/A (Hard-coded)
	Starting node number (NID) of first function group			
Rsvd1	15:8	R	00h	N/A (Hard-coded)
	Reserved.			
TotalNodes	7:0	R	01h	N/A (Hard-coded)
	Total number of nodes			

6.5. AFG (NID = 01h): NodeInfo

Reg	Byte 4 (Bits 31:24)	Byte 3 (Bits 23:16)	Byte 2 (Bits 15:8)	Byte 1 (Bits 7:0)
Set				
Get	F0004h			

Field Name	Bits	R/W	Default	Reset
Rsvd2	31:24	R	00h	N/A (Hard-coded)
	Reserved.			
StartNID	23:16	R	0Ah	N/A (Hard-coded)
	Starting node number for function group subordinate nodes.			
Rsvd1	15:8	R	00h	N/A (Hard-coded)
	Reserved.			
TotalNodes	7:0	R	1Bh	N/A (Hard-coded)
	Total number of nodes.			

6.5.1. AFG (NID = 01h): FGType

Reg	Byte 4 (Bits 31:24)	Byte 3 (Bits 23:16)	Byte 2 (Bits 15:8)	Byte 1 (Bits 7:0)
Set				
Get	F0005h			

©2014 TEMPO SEMICONDCUTOR, INC..

Field Name	Bits	R/W	Default	Reset
Rsvd	31:9	R	000000h	N/A (Hard-coded)
	Reserved.			
UnSol	8	R	1h	N/A (Hard-coded)
	Unsolicited response supported: 1 = yes, 0 = no.			
NodeType	7:0	R	1h	N/A (Hard-coded)
	Function group type: 00h = Reserved 01h = Audio Function Group 02h = Vendor Defined Modem Function Group 03h-7Fh = Reserved 80h-FFh = Vendor Defined Function Group			

6.5.2. AFG (NID = 01h): AFGCap

Reg	Byte 4 (Bits 31:24)	Byte 3 (Bits 23:16)	Byte 2 (Bits 15:8)	Byte 1 (Bits 7:0)
Set				
Get	F0008h			

Field Name	Bits	R/W	Default	Reset
Rsvd3	31:17	R	00h	N/A (Hard-coded)
	Reserved.			
BeepGen	16	R	1h	N/A (Hard-coded)
	Beep generator present: 1 = yes, 0 = no.			
Rsvd2	15:12	R	0h	N/A (Hard-coded)
	Reserved.			
InputDelay	11:8	R	Dh	N/A (Hard-coded)
	Typical latency in frames. Number of samples between when the sample is received as an analog signal at the pin and when the digital representation is transmitted on the HD Audio link.			
Rsvd1	7:4	R	0h	N/A (Hard-coded)
	Reserved.			

©2014 TEMPO SEMICONDCUTOR, INC..

Field Name	Bits	R/W	Default	Reset
OutputDelay	3:0	R	Dh	N/A (Hard-coded)
	Typical latency in frames. Number of samples between when the signal is received from the HD Audio link and when it appears as an analog signal at the pin.			

6.5.3. AFG (NID = 01h): PCMCap

Reg	Byte 4 (Bits 31:24)	Byte 3 (Bits 23:16)	Byte 2 (Bits 15:8)	Byte 1 (Bits 7:0)
Set				
Get	F000Ah			

Field Name	Bits	R/W	Default	Reset
Rsvd2	31:21	R	000h	N/A (Hard-coded)
	Reserved.			
B32	20	R	0h	N/A (Hard-coded)
	32 bit audio format support: 1 = yes, 0 = no.			
B24	19	R	1h	N/A (Hard-coded)
	24 bit audio format support: 1 = yes, 0 = no.			
B20	18	R	1h	N/A (Hard-coded)
	20 bit audio format support: 1 = yes, 0 = no.			
B16	17	R	1h	N/A (Hard-coded)
	16 bit audio format support: 1 = yes, 0 = no.			
B8	16	R	0h	N/A (Hard-coded)
	8 bit audio format support: 1 = yes, 0 = no.			
Rsvd1	15:12	R	0h	N/A (Hard-coded)
	Reserved.			
R12	11	R	0h	N/A (Hard-coded)
	384kHz rate support: 1 = yes, 0 = no.			
R11	10	R	1h	N/A (Hard-coded)
	192kHz rate support: 1 = yes, 0 = no.			

©2014 TEMPO SEMICONDCUTOR, INC..

Field Name	Bits	R/W	Default	Reset
R10	9	R	0h	N/A (Hard-coded)
	176.4kHz rate support: 1 = yes, 0 = no.			
R9	8	R	1h	N/A (Hard-coded)
	96kHz rate support: 1 = yes, 0 = no.			
R8	7	R	1h	N/A (Hard-coded)
	88.2kHz rate support: 1 = yes, 0 = no.			
R7	6	R	1h	N/A (Hard-coded)
	48kHz rate support: 1 = yes, 0 = no.			
R6	5	R	1h	N/A (Hard-coded)
	44.1kHz rate support: 1 = yes, 0 = no.			
R5	4	R	0h	N/A (Hard-coded)
	32kHz rate support: 1 = yes, 0 = no.			
R4	3	R	0h	N/A (Hard-coded)
	22.05kHz rate support: 1 = yes, 0 = no.			
R3	2	R	0h	N/A (Hard-coded)
	16kHz rate support: 1 = yes, 0 = no.			
R2	1	R	0h	N/A (Hard-coded)
	11.025kHz rate support: 1 = yes, 0 = no.			
R1	0	R	0h	N/A (Hard-coded)
	8kHz rate support: 1 = yes, 0 = no.			

6.5.4. AFG (NID = 01h): StreamCap

Reg	Byte 4 (Bits 31:24)	Byte 3 (Bits 23:16)	Byte 2 (Bits 15:8)	Byte 1 (Bits 7:0)
Set				
Get	F000Bh			

©2014 TEMPO SEMICONDCUTOR, INC..

Field Name	Bits	R/W	Default	Reset
Rsvd	31:3	R	00000000h	N/A (Hard-coded)
	Reserved.			
AC3	2	R	0h	N/A (Hard-coded)
	AC-3 formatted data support: 1 = yes, 0 = no.			
Float32	1	R	0h	N/A (Hard-coded)
	Float32 formatted data support: 1 = yes, 0 = no.			
PCM	0	R	1h	N/A (Hard-coded)
	PCM-formatted data support: 1 = yes, 0 = no.			

6.5.5. AFG (NID = 01h): InAmpCap

Reg	Byte 4 (Bits 31:24)	Byte 3 (Bits 23:16)	Byte 2 (Bits 15:8)	Byte 1 (Bits 7:0)
Set				
Get	F000Dh			

Field Name	Bits	R/W	Default	Reset
Mute	31	R	0h	N/A (Hard-coded)
	Mute support: 1 = yes, 0 = no.			
Rsvd3	30:23	R	00h	N/A (Hard-coded)
	Reserved.			
StepSize	22:16	R	27h	N/A (Hard-coded)
	Size of each step in the gain range: 0 to 127 = .25dB to 32dB, in .25dB steps.			
Rsvd2	15	R	0h	N/A (Hard-coded)
	Reserved.			
NumSteps	14:8	R	03h	N/A (Hard-coded)
	Number of gains steps (number of possible settings - 1).			
Rsvd1	7	R	0h	N/A (Hard-coded)
	Reserved.			

©2014 TEMPO SEMICONDCUTOR, INC..

Field Name	Bits	R/W	Default	Reset
Offset	6:0	R	00h	N/A (Hard-coded)
	Indicates which step is 0dB			

6.5.6. AFG (NID = 01h): PwrStateCap

Reg	Byte 4 (Bits 31:24)	Byte 3 (Bits 23:16)	Byte 2 (Bits 15:8)	Byte 1 (Bits 7:0)
Set				
Get	F000Fh			

Field Name	Bits	R/W	Default	Reset
EPSS	31	R	1h	N/A (Hard-coded)
	Extended power states support: 1 = yes, 0 = no.			
ClkStop	30	R	1h	N/A (Hard-coded)
	D3 clock stop support: 1 = yes, 0 = no.			
LPD3Sup	29	R	1h	N/A (Hard-coded)
	Codec state intended during system S3 state: 1 = D3Hot, 0 = D3Cold.			
Rsvd	28:5	R	000000h	N/A (Hard-coded)
	Reserved.			
D3ColdSup	4	R	1h	N/A (Hard-coded)
	D3Cold power state support: 1 = yes, 0 = no.			
D3Sup	3	R	1h	N/A (Hard-coded)
	D3 power state support: 1 = yes, 0 = no.			
D2Sup	2	R	1h	N/A (Hard-coded)
	D2 power state support: 1 = yes, 0 = no.			
D1Sup	1	R	1h	N/A (Hard-coded)
	D1 power state support: 1 = yes, 0 = no.			
D0Sup	0	R	1h	N/A (Hard-coded)
	D0 power state support: 1 = yes, 0 = no.			

©2014 TEMPO SEMICONDCUTOR, INC..

6.5.7. AFG (NID = 01h): GPIOCnt

Reg	Byte 4 (Bits 31:24)	Byte 3 (Bits 23:16)	Byte 2 (Bits 15:8)	Byte 1 (Bits 7:0)
Set				
Get	F0011h			

Field Name	Bits	R/W	Default	Reset
GPIWake	31	R	1h	N/A (Hard-coded)
	Wake capability. Assuming the Wake Enable Mask controls are enabled, GPIO's configured as inputs can cause a wake (generate a Status Change event on the link) when there is a change in level on the pin.			
GPIUnsol	30	R	1h	N/A (Hard-coded)
	GPIO unsolicited response support: 1 = yes, 0 = no.			
Rsvd	29:24	R	00h	N/A (Hard-coded)
	Reserved.			
NumGPIs	23:16	R	00h	N/A (Hard-coded)
	Number of GPI pins supported by function group.			
NumGPOs	15:8	R	00h	N/A (Hard-coded)
	Number of GPO pins supported by function group.			
NumGPIOs	7:0	R	05h	N/A (Hard-coded)
	Number of GPIO pins supported by function group.			

6.5.8. AFG (NID = 01h): OutAmpCap

Reg	Byte 4 (Bits 31:24)	Byte 3 (Bits 23:16)	Byte 2 (Bits 15:8)	Byte 1 (Bits 7:0)
Set				
Get	F0012h			

Field Name	Bits	R/W	Default	Reset
Mute	31	R	1h	N/A (Hard-coded)
	Mute support: 1 = yes, 0 = no.			

©2014 TEMPO SEMICONDCUTOR, INC..

Field Name	Bits	R/W	Default	Reset
Rsvd3	30:23	R	00h	N/A (Hard-coded)
	Reserved.			
StepSize	22:16	R	02h	N/A (Hard-coded)
	Size of each step in the gain range: 0 to 127 = .25dB to 32dB, in .25dB steps.			
Rsvd2	15	R	0h	N/A (Hard-coded)
	Reserved.			
NumSteps	14:8	R	7Fh	N/A (Hard-coded)
	Number of gains steps (number of possible settings - 1).			
Rsvd1	7	R	0h	N/A (Hard-coded)
	Reserved.			
Offset	6:0	R	7Fh	N/A (Hard-coded)
	Indicates which step is 0dB			

6.5.9. AFG (NID = 01h): PwrState

Reg	Byte 4 (Bits 31:24)	Byte 3 (Bits 23:16)	Byte 2 (Bits 15:8)	Byte 1 (Bits 7:0)
Set				705h
Get	F0500h			

Field Name	Bits	R/W	Default	Reset
Rsvd3	31:11	R	000000h	N/A (Hard-coded)
	Reserved.			
SettingsReset	10	R	1h	POR - DAFG - ULR
	Indicates if any persistent settings in this Function Group have been reset. Cleared by PwrState 'Get' to this Widget.			
ClkStopOK	9	R	1h	POR - DAFG - ULR
	Bit clock can currently be removed: 1 = yes, 0 = no.			
Error	8	R	0h	POR - DAFG - ULR
	Error indicator: 1 = cannot enter requested power state, 0 = no problem with requested power state.			

©2014 TEMPO SEMICONDCUTOR, INC..

Field Name	Bits	R/W	Default	Reset
Rsvd2	7	R	0h	N/A (Hard-coded)
	Reserved.			
Act	6:4	R	3h	POR - DAFG - LR
	Actual power state of this widget.			
Rsvd1	3	R	0h	N/A (Hard-coded)
	Reserved.			
Set	2:0	RW	3h	POR - DAFG - LR
	Current power state setting for this widget.			

6.5.10. AFG (NID = 01h): UnsolResp

Reg	Byte 4 (Bits 31:24)	Byte 3 (Bits 23:16)	Byte 2 (Bits 15:8)	Byte 1 (Bits 7:0)
Set				708h
Get	F0800h			

Field Name	Bits	R/W	Default	Reset
Rsvd2	31:8	R	000000h	N/A (Hard-coded)
	Reserved.			
En	7	RW	0h	POR - DAFG - ULR
	Unsolicited response enable: 1 = enabled, 0 = disabled.			
Rsvd1	6	R	0h	N/A (Hard-coded)
	Reserved.			
Tag	5:0	RW	00h	POR - DAFG - ULR
	Software programmable field returned in top six bits (31:26) of every Unsolicited Response generated by this node.			

6.5.11. AFG (NID = 01h): GPIO

Reg	Byte 4 (Bits 31:24)	Byte 3 (Bits 23:16)	Byte 2 (Bits 15:8)	Byte 1 (Bits 7:0)
Set				715h
Get	F1500h			

©2014 TEMPO SEMICONDCUTOR, INC..

Field Name	Bits	R/W	Default	Reset
Rsvd	31:5	R	00000000h	N/A (Hard-coded)
	Reserved.			
Data4	4	RW	0h	POR - DAFG - ULR
	Data for GPIO4. If this GPIO bit is configured as Sticky (edge-sensitive) input, it can be cleared by writing "0". For details of read back value, refer to HD Audio spec. section 7.3.3.22 (Available only on 48-pin versions)			
Data3	3	RW	0h	POR - DAFG - ULR
	Data for GPIO3. If this GPIO bit is configured as Sticky (edge-sensitive) input, it can be cleared by writing "0". For details of read back value, refer to HD Audio spec. section 7.3.3.22			
Data2	2	RW	0h	POR - DAFG - ULR
	Data for GPIO2. If this GPIO bit is configured as Sticky (edge-sensitive) input, it can be cleared by writing "0". For details of read back value, refer to HD Audio spec. section 7.3.3.22			
Data1	1	RW	0h	POR - DAFG - ULR
	Data for GPIO1. If this GPIO bit is configured as Sticky (edge-sensitive) input, it can be cleared by writing "0". For details of read back value, refer to HD Audio spec. section 7.3.3.22			
Data0	0	RW	0h	POR - DAFG - ULR
	Data for GPIO0. If this GPIO bit is configured as Sticky (edge-sensitive) input, it can be cleared by writing "0". For details of read back value, refer to HD Audio spec. section 7.3.3.22			

6.5.12. AFG (NID = 01h): GPIOEn

Reg	Byte 4 (Bits 31:24)	Byte 3 (Bits 23:16)	Byte 2 (Bits 15:8)	Byte 1 (Bits 7:0)
Set				716h
Get	F1600h			

Field Name	Bits	R/W	Default	Reset
Rsvd	31:5	R	00000000h	N/A (Hard-coded)
	Reserved.			

©2014 TEMPO SEMICONDCUTOR, INC..

Field Name	Bits	R/W	Default	Reset
Mask4	4	RW	0h	POR - DAFG - ULR
	Enable for GPIO4: 0 = pin is disabled (Hi-Z state); 1 = pin is enabled; behavior determined by GPIO Direction control (Available only on 48-pin versions)			
Mask3	3	RW	0h	POR - DAFG - ULR
	Enable for GPIO3: 0 = pin is disabled (Hi-Z state); 1 = pin is enabled; behavior determined by GPIO Direction control			
Mask2	2	RW	0h	POR - DAFG - ULR
	Enable for GPIO2: 0 = pin is disabled (Hi-Z state); 1 = pin is enabled; behavior determined by GPIO Direction control			
Mask1	1	RW	0h	POR - DAFG - ULR
	Enable for GPIO1: 0 = pin is disabled (Hi-Z state); 1 = pin is enabled; behavior determined by GPIO Direction control			
Mask0	0	RW	0h	POR - DAFG - ULR
	Enable for GPIO0: 0 = pin is disabled (Hi-Z state); 1 = pin is enabled; behavior determined by GPIO Direction control			

6.5.13. AFG (NID = 01h): GPIODir

Reg	Byte 4 (Bits 31:24)	Byte 3 (Bits 23:16)	Byte 2 (Bits 15:8)	Byte 1 (Bits 7:0)
Set				717h
Get	F1700h			

Field Name	Bits	R/W	Default	Reset
Rsvd	31:5	R	00000000h	N/A (Hard-coded)
	Reserved.			
Control4	4	RW	0h	POR - DAFG - ULR
	Direction control for GPIO4: 0 = GPIO is configured as input; 1 = GPIO is configured as output (Available only on 48-pin versions)			
Control3	3	RW	0h	POR - DAFG - ULR
	Direction control for GPIO3: 0 = GPIO is configured as input; 1 = GPIO is configured as output			

©2014 TEMPO SEMICONDCUTOR, INC..

Field Name	Bits	R/W	Default	Reset
Control2	2	RW	0h	POR - DAFG - ULR
	Direction control for GPIO2: 0 = GPIO is configured as input; 1 = GPIO is configured as output			
Control1	1	RW	0h	POR - DAFG - ULR
	Direction control for GPIO1: 0 = GPIO is configured as input; 1 = GPIO is configured as output			
Control0	0	RW	0h	POR - DAFG - ULR
	Direction control for GPIO0: 0 = GPIO is configured as input; 1 = GPIO is configured as output			

6.5.14. AFG (NID = 01h): GPIOWakeEn

Reg	Byte 4 (Bits 31:24)	Byte 3 (Bits 23:16)	Byte 2 (Bits 15:8)	Byte 1 (Bits 7:0)
Set				718h
Get	F1800h			

Field Name	Bits	R/W	Default	Reset
Rsvd	31:5	R	00000000h	N/A (Hard-coded)
	Reserved.			
W4	4	RW	0h	POR - DAFG - ULR
	Wake enable for GPIO4: 0 = wake-up event is disabled; 1 = When HD Audio link is powered down (RST# is asserted), a wake-up event will trigger a Status Change Request event on the link. (Available only on 48-pin versions)			
W3	3	RW	0h	POR - DAFG - ULR
	Wake enable for GPIO3: 0 = wake-up event is disabled; 1 = When HD Audio link is powered down (RST# is asserted), a wake-up event will trigger a Status Change Request event on the link.			
W2	2	RW	0h	POR - DAFG - ULR
	Wake enable for GPIO2: 0 = wake-up event is disabled; 1 = When HD Audio link is powered down (RST# is asserted), a wake-up event will trigger a Status Change Request event on the link.			

©2014 TEMPO SEMICONDCUTOR, INC..

Field Name	Bits	R/W	Default	Reset
W1	1	RW	0h	POR - DAFG - ULR
	Wake enable for GPIO1: 0 = wake-up event is disabled; 1 = When HD Audio link is powered down (RST# is asserted), a wake-up event will trigger a Status Change Request event on the link.			
W0	0	RW	0h	POR - DAFG - ULR
	Wake enable for GPIO0: 0 = wake-up event is disabled; 1 = When HD Audio link is powered down (RST# is asserted), a wake-up event will trigger a Status Change Request event on the link.			

6.5.15. AFG (NID = 01h): GPIOUnsol

Reg	Byte 4 (Bits 31:24)	Byte 3 (Bits 23:16)	Byte 2 (Bits 15:8)	Byte 1 (Bits 7:0)
Set				719h
Get	F1900h			

Field Name	Bits	R/W	Default	Reset
Rsvd	31:5	R	00000000h	N/A (Hard-coded)
	Reserved.			
EnMask4	4	RW	0h	POR - DAFG - ULR
	Unsolicited enable mask for GPIO4. If set, and the Unsolicited Response control for this widget has been enabled, an unsolicited response will be sent when GPIO2 is configured as input and changes state. (Available only on 48-pin versions)			
EnMask3	3	RW	0h	POR - DAFG - ULR
	Unsolicited enable mask for GPIO3. If set, and the Unsolicited Response control for this widget has been enabled, an unsolicited response will be sent when GPIO2 is configured as input and changes state.			
EnMask2	2	RW	0h	POR - DAFG - ULR
	Unsolicited enable mask for GPIO2. If set, and the Unsolicited Response control for this widget has been enabled, an unsolicited response will be sent when GPIO2 is configured as input and changes state.			
EnMask1	1	RW	0h	POR - DAFG - ULR
	Unsolicited enable mask for GPIO1. If set, and the Unsolicited Response control for this widget has been enabled, an unsolicited response will be sent when GPIO1 is configured as input and changes state.			

©2014 TEMPO SEMICONDCUTOR, INC..

Field Name	Bits	R/W	Default	Reset
EnMask0	0	RW	0h	POR - DAFG - ULR
	Unsolicited enable mask for GPIO0. If set, and the Unsolicited Response control for this widget has been enabled, an unsolicited response will be sent when GPIO0 is configured as input and changes state.			

6.5.16. AFG (NID = 01h): GPIOSticky

Reg	Byte 4 (Bits 31:24)	Byte 3 (Bits 23:16)	Byte 2 (Bits 15:8)	Byte 1 (Bits 7:0)
Set				71Ah
Get	F1A00h			

Field Name	Bits	R/W	Default	Reset
Rsvd	31:5	R	00000000h	N/A (Hard-coded)
	Reserved.			
Mask4	4	RW	0h	POR - DAFG - ULR
	GPIO4 input type (when configured as input): 0 = Non-Sticky (level-sensitive); 1 = Sticky (edge-sensitive). (Available only on 48-pin versions)			
Mask3	3	RW	0h	POR - DAFG - ULR
	GPIO3 input type (when configured as input): 0 = Non-Sticky (level-sensitive); 1 = Sticky (edge-sensitive).			
Mask2	2	RW	0h	POR - DAFG - ULR
	GPIO2 input type (when configured as input): 0 = Non-Sticky (level-sensitive); 1 = Sticky (edge-sensitive).			
Mask1	1	RW	0h	POR - DAFG - ULR
	GPIO1 input type (when configured as input): 0 = Non-Sticky (level-sensitive); 1 = Sticky (edge-sensitive).			
Mask0	0	RW	0h	POR - DAFG - ULR
	GPIO0 input type (when configured as input): 0 = Non-Sticky (level-sensitive); 1 = Sticky (edge-sensitive).			

6.5.17. AFG (NID = 01h): SubID

Reg	Byte 4 (Bits 31:24)	Byte 3 (Bits 23:16)	Byte 2 (Bits 15:8)	Byte 1 (Bits 7:0)
Set	723h	722h	721h	720h

©2014 TEMPO SEMICONDCUTOR, INC..

6.5.17. AFG (NID = 01h): SubID

Reg	Byte 4 (Bits 31:24)	Byte 3 (Bits 23:16)	Byte 2 (Bits 15:8)	Byte 1 (Bits 7:0)
Get	F2300h / F2200h / F2100h / F2000h			

Field Name	Bits	R/W	Default	Reset
Subsys3	31:24	RW	00h	POR
	Subsystem ID (byte 3)			
Subsys2	23:16	RW	00h	POR
	Subsystem ID (byte 2)			
Subsys1	15:8	RW	01h	POR
	Subsystem ID (byte 1)			
Assembly	7:0	RW	00h	POR
	Assembly ID (Not applicable to codec vendors).			

6.5.18. AFG (NID = 01h): GPIOPIrty

Reg	Byte 4 (Bits 31:24)	Byte 3 (Bits 23:16)	Byte 2 (Bits 15:8)	Byte 1 (Bits 7:0)
Set				770h
Get	F7000h			

Field Name	Bits	R/W	Default	Reset
Rsvd	31:5	R	00000000h	N/A (Hard-coded)
	Reserved.			
GP4	4	RW	1h	POR - DAFG - ULR
	GPIO4 Polarity: If configured as output or non-sticky input: 0 = inverting 1 = non-inverting If configured as sticky input: 0 = falling edges will be detected 1 = rising edges will be detected (Available only on 48-pin versions)			

©2014 TEMPO SEMICONDCUTOR, INC..

Field Name	Bits	R/W	Default	Reset
GP3	3	RW	1h	POR - DAFG - ULR
	GPIO3 Polarity: If configured as output or non-sticky input: 0 = inverting 1 = non-inverting If configured as sticky input: 0 = falling edges will be detected 1 = rising edges will be detected			
GP2	2	RW	1h	POR - DAFG - ULR
	GPIO2 Polarity: If configured as output or non-sticky input: 0 = inverting 1 = non-inverting If configured as sticky input: 0 = falling edges will be detected 1 = rising edges will be detected			
GP1	1	RW	1h	POR - DAFG - ULR
	GPIO1 Polarity: If configured as output or non-sticky input: 0 = inverting 1 = non-inverting If configured as sticky input: 0 = falling edges will be detected 1 = rising edges will be detected			
GP0	0	RW	1h	POR - DAFG - ULR
	GPIO0 Polarity: If configured as output or non-sticky input: 0 = inverting 1 = non-inverting If configured as sticky input: 0 = falling edges will be detected 1 = rising edges will be detected			

6.5.19. AFG (NID = 01h): GPIODrive

Reg	Byte 4 (Bits 31:24)	Byte 3 (Bits 23:16)	Byte 2 (Bits 15:8)	Byte 1 (Bits 7:0)
Set				771h
Get	F7100h			

©2014 TEMPO SEMICONDCUTOR, INC..

Field Name	Bits	R/W	Default	Reset
Rsvd	31:5	R	00000000h	N/A (Hard-coded)
	Reserved.			
OD4	4	RW	0h	POR - DAFG - ULR
	GPIO4 Drive Mode: 0 = push-pull (drive 0 and 1); 1 = open drain (drive 0, float for 1). (Available only on 48-pin versions)			
OD3	3	RW	0h	POR - DAFG - ULR
	GPIO3 Drive Mode: 0 = push-pull (drive 0 and 1); 1 = open drain (drive 0, float for 1).			
OD2	2	RW	0h	POR - DAFG - ULR
	GPIO2 Drive Mode: 0 = push-pull (drive 0 and 1); 1 = open drain (drive 0, float for 1).			
OD1	1	RW	0h	POR - DAFG - ULR
	GPIO1 Drive Mode: 0 = push-pull (drive 0 and 1); 1 = open drain (drive 0, float for 1).			
OD0	0	RW	0h	POR - DAFG - ULR
	GPIO0 Drive Mode: 0 = push-pull (drive 0 and 1); 1 = open-drain (drive 0, float for 1).			

6.5.20. AFG (NID = 01h): DMic

Reg	Byte 4 (Bits 31:24)	Byte 3 (Bits 23:16)	Byte 2 (Bits 15:8)	Byte 1 (Bits 7:0)
Set				778h
Get	F7800h			

Field Name	Bits	R/W	Default	Reset
Rsvd	31:6	R	0000000h	N/A (Hard-coded)
	Reserved.			
Mono1	5	RW	0h	POR
	DMic1 mono select: 0 = stereo operation, 1 = mono operation (left channel duplicated to the right channel).			

©2014 TEMPO SEMICONDCUTOR, INC..

Field Name	Bits	R/W	Default	Reset
Mono0	4	RW	0h	POR
	DMic0 mono select: 0 = stereo operation, 1 = mono operation (left channel duplicated to the right channel).			
PhAdj	3:2	RW	0h	POR
	Selects what phase of the DMic clock the data should be latched: 0h = left data rising edge/right data falling edge 1h = left data center of high/right data center of low 2h = left data falling edge/right data rising edge 3h = left data center of low/right data center of high			
Rate	1:0	RW	2h	POR
	Selects the DMic clock rate: 0h = 4.704MHz 1h = 3.528MHz 2h = 2.352MHz 3h = 1.176MHz.			

6.5.21. AFG (NID = 01h): DACMode

Reg	Byte 4 (Bits 31:24)	Byte 3 (Bits 23:16)	Byte 2 (Bits 15:8)	Byte 1 (Bits 7:0)
Set				780h
Get	F8000h			

Field Name	Bits	R/W	Default	Reset
Rsvd	31:8	R	000000h	N/A (Hard-coded)
	Reserved.			
SDMSettleDisable	7	RW	0h	POR
	SDM wait-to-settle disable: 1 = at mute, the SDM switches to the mute pattern immediately 0 = at mute, the SDM switches to the mute pattern after settling (can take up to ~45ms)			
SDMCoeffSel	6	RW	0h	POR
	DAC SDM coefficient select (stages 1, 2, 3): 1 = 1/16, 1/2, 1/4 0 = 1/16, 1/4, 1/2			
SDMLFHalf	5	RW	0h	POR
	DAC SDM local feedback coefficient select: 1 = 1/4096, 0 = 1/2048.			

©2014 TEMPO SEMICONDCUTOR, INC..

Field Name	Bits	R/W	Default	Reset
SDMLFDisable	4	RW	0h	POR
	DAC SDM local feedback disable: 1 = local feedback disabled, 0 = local feedback enabled.			
InvertValid	3	RW	0h	POR
	DAC Valid Invert: 1 = 7.056MHz valid strobe is inverted, 0 = 7.056MHz valid strobe is not inverted.			
InvertData	2	RW	0h	POR
	DAC Data Invert: 1 = 1-bit outputs are inverted, 0 = 1-bit outputs are not inverted.			
Atten6dBDisable	1	RW	1h	POR
	Disable built-in -6dB digital attenuation: 1 = -6dB disabled, 0 = -6dB enabled.			
Fade	0	RW	1h	POR
	DAC Gain Fade Enable: 1 = gain will be slowly faded from old value to new value (~10ms) 0 = gain will jump immediately to new value.			

6.5.22. AFG (NID = 01h): ADCMode

Reg	Byte 4 (Bits 31:24)	Byte 3 (Bits 23:16)	Byte 2 (Bits 15:8)	Byte 1 (Bits 7:0)
Set				784h
Get	F8400h			

Field Name	Bits	R/W	Default	Reset
Rsvd2	31:4	R	0000000h	N/A (Hard-coded)
	Reserved.			
InvertValid	3	RW	0h	POR
	ADC Valid Invert: 1 = 14.112MHz valid strobe is inverted, 0 = 14.112MHz valid strobe is not inverted.			
InvertData	2	RW	0h	POR
	ADC Data Invert: 1 = 1-bit inputs are inverted, 0 = 1-bit inputs are not inverted.			
ADCClkDelay	1	RW	0h	POR
	Delay ADC clock.			

©2014 TEMPO SEMICONDCUTOR, INC..

Field Name	Bits	R/W	Default	Reset
DACClkDelay	0	RW	0h	POR
	Delay DAC clock.			

6.5.23. AFG (NID = 01h): PortUse

Reg	Byte 4 (Bits 31:24)	Byte 3 (Bits 23:16)	Byte 2 (Bits 15:8)	Byte 1 (Bits 7:0)
Set				7C0h
Get	FC000h			

Field Name	Bits	R/W	Default	Reset
Rsvd2	31:7	R	0000000h	N/A (Hard-coded)
	Reserved.			
Mono	6	RW	1h	POR
	1=power down port if not input or output enabled, 0=do not force power down based on input or output enable			
PortF	5	RW	1h	POR
	1=power down port if not input or output enabled, 0=do not force power down based on input or output enable			
PortE	4	RW	1h	POR
	1=power down port if not input or output enabled, 0=do not force power down based on input or output enable (Available only on 48-pin versions)			
Rsvd1	3	R	0h	N/A (Hard-coded)
	Reserved.			
PortC	2	RW	1h	POR
	1=power down port if not input or output enabled, 0=do not force power down based on input or output enable			
PortB	1	RW	1h	POR
	1=power down port if not input or output enabled, 0=do not force power down based on input or output enable			
PortA	0	RW	1h	POR
	1=power down port if not input or output enabled, 0=do not force power down based on input or output enable.			

©2014 TEMPO SEMICONDCUTOR, INC..

6.5.24. AFG (NID = 01h): ComJack

Reg	Byte 4 (Bits 31:24)	Byte 3 (Bits 23:16)	Byte 2 (Bits 15:8)	Byte 1 (Bits 7:0)
Set			7C7h	7C6h
Get	FC700h/FC600h			

Field Name	Bits	R/W	Default	Reset
Rsvd3	31:14	R	00000000h	N/A (Hard-coded)
	Reserved.			
ComJackSupport	11	RW	1h	POR
	Combo Jack support enable, 0 = disable; 1 = enable			
RbCon	10:8	RW	4h	POR
	Combo jack detection reference voltage 000 = 0.18*AVDD 001 = 0.16*AVDD 010 = 0.14*AVDD 011 = 0.12*AVDD 100 = 0.10*AVDD 101 = 0.08*AVDD 110 = 0.06*AVDD 111 = 0.04*AVDD			
MasterPort	7:5	RW	0h	POR
	Port tied to the jack presence detection switch 000 = Port A 001 = Port B 010 = Port C 011 = Port D 100 = Port E 101 = Port F			
Rsvd1	4	R	0h	N/A (Hard-coded)
	Reserved.			

©2014 TEMPO SEMICONDCUTOR, INC..

Field Name	Bits	R/W	Default	Reset
SlavePort	3:1	RW	0h	POR
	Port used as microphone input When combo jack detection is enabled, Port presence detection as shown in the pin complex is not sensed directly by the sense input but is inferred by the load placed on the Vref_Output associated with the port 010 = Port C;100 = Port E (Available only on 48-pin versions) others revserved.			
Det_en	0	R	0h	POR
	0h = disable combo jact detection 1h = enable combo jact detection			

6.5.25. AFG (NID = 01h): ComJackTime

Reg	Byte 4 (Bits 31:24)	Byte 3 (Bits 23:16)	Byte 2 (Bits 15:8)	Byte 1 (Bits 7:0)
Set			7CAh	7C9h
Get	FCA00h / FC900h			

Field Name	Bits	R/W	Default	Reset
Rsvd3	31:16	R	00000h	N/A (Hard-coded)
	Reserved.			
bouncetimer_bypass	15	RW	0h	POR
	0 = all the combjack debounce time in normal; 1= all the comjack debounce time in simulation mode(debounce time is short).			
t_delay_slave_port_usr	14:12	RW	3h	POR
	000 = 2frame 001 =4frame 010 =8frame 011 =16frame 100 = 32frame 101 =64frame 110 = 128frame 111 = 256frame			

©2014 TEMPO SEMICONDCUTOR, INC..

Field Name	Bits	R/W	Default	Reset
t_stable	11:8	RW	7h	POR
	0000 = 0.1ms 0001 =0.5ms 0010 =1ms 0011 =2ms 0100 = 4ms 0101 =8ms 0110 = 16ms 0111 = 32ms 1000 = 64ms 1001 =128ms;1010 =256ms;1011 =512ms 1100 = 1024ms 1101 =1024ms 1110 = 1024ms 1111 = 1024ms			
Rsvd2	7	R	0h	N/A (Hard-coded)
	Reserved.			
t_long_realtime_detect	6:4	RW	5h	POR
	000 = 2s 001 =4s 010 =8s 011 =16s 100 = 32s 101 =64s 110 = 128s 111 = infinite			
Rsvd1	3	R	0h	N/A (Hard-coded)
	Reserved.			
t_delay_verfout	2:0	RW	3h	POR
	000 = 0.1ms 001 =50ms 010 = 125ms 011 =250ms 100 = 500ms 101 = 1s 110 = 2s 111 = 4s			

©2014 TEMPO SEMICONDCUTOR, INC..

6.5.26. AFG (NID = 01h): VSPwrState

Reg	Byte 4 (Bits 31:24)	Byte 3 (Bits 23:16)	Byte 2 (Bits 15:8)	Byte 1 (Bits 7:0)
Set				7D8h
Get	FD800h			

Field Name	Bits	R/W	Default	Reset
Rsvd	31:2	R	00000000h	N/A (Hard-coded)
	Reserved.			
D5	1	RW	0h	POR - ELR
	Vendor specific D5 power state, only entered once the part is already in D3cold (this bit must be set before the command to enter D3cold). If set, this bit overrides the D4 bit (bit 0). Includes the power savings of D4, but additionally powers down GPIO pins, the VAG amp, and the HP amps. Exits this power state via POR or rising edge of Link Reset.			
D4	0	RW	0h	POR - ELR
	Vendor specific D4 power state, only entered once the part is already in D3cold (this bit must be set before the command to enter D3cold). If the D5 bit (bit 1) is set, this bit is overridden. Includes the power savings of D3cold, but additionally powers down the HDA interface (no responses). Exit this power state via POR or rising edge of Link Reset.			

6.5.27. AFG (NID = 01h): AnaPort

Reg	Byte 4 (Bits 31:24)	Byte 3 (Bits 23:16)	Byte 2 (Bits 15:8)	Byte 1 (Bits 7:0)
Set			7EDh	7ECh
Get	FED00h / FEC00h			

Field Name	Bits	R/W	Default	Reset
Rsvd2	31:7	R	0000000h	N/A (Hard-coded)
	Reserved.			
MonoPwd	6	RW	0h	POR
	Power down Mono Output. (Available only on 48-pin versions)			
FPwd	5	RW	0h	POR
	Power down Port F			

©2014 TEMPO SEMICONDCUTOR, INC..

Field Name	Bits	R/W	Default	Reset
EPwd	4	RW	0h	POR
	Power down Port E (Available only on 48-pin versions)			
Rsvd1	3	R	0h	N/A (Hard-coded)
	Reserved.			
CPwd	2	RW	0h	POR
	Power down Port C.			
BPwd	1	RW	0h	POR
	Power down Port B.			
APwd	0	RW	0h	POR
	Power down Port A.			

©2014 TEMPO SEMICONDCUTOR, INC..

6.5.28. AFG (NID = 01h): AnaBeep

Reg	Byte 4 (Bits 31:24)	Byte 3 (Bits 23:16)	Byte 2 (Bits 15:8)	Byte 1 (Bits 7:0)
Set				7EEh
Get	FEE00h			

Field Name	Bits	R/W	Default	Reset
Rsvd1	31:9	R	000000h	N/A (Hard-coded)
	Reserved.			
Detect	8	R	0h	POR - DAFG - ULR
	0: no beep present; 1: beep present			
ConvertEn	7	RW	1h	POR
	analog pc beep quantization enable (enabled only when both d2a_ana_pc_beep_det_en and d2a_ana_pc_beep_convert_en are 1)			
DetectEn	6	RW	1h	POR
	Analog pc beep detection enable 0h = disable 1h = enable			
Gain	5:4	RW	3h	POR
	Analog PC Beep Gain: 0h = -24dB, 1h = -18dB, 2h = -12dB, 3h = -6dB.			
CntSel	3:2	RW	0h	POR
	Select counter delay.0h=64ms,1h = 128ms, 2h = 256ms, 3h = 512ms.			
Mode	1:0	RW	2h	POR
	Analog PC Beep Mode: 00b = Always disabled 01b = Always enabled 1Xb = Enabled during HDA Link Reset only			

6.5.29. AFG (NID = 01h): AnaCapless

Reg	Byte 4 (Bits 31:24)	Byte 3 (Bits 23:16)	Byte 2 (Bits 15:8)	Byte 1 (Bits 7:0)
Set	7FBh	7FAh	7F9h	7F8h
Get	FFB00h / FFA00h / FF900h / FF800h			

©2014 TEMPO SEMICONDCUTOR, INC..

Field Name	Bits	R/W	Default	Reset
Rsvd2	31:30	R	0h	N/A (Hard-coded)
	Reserved.			
VRegSCDet	29	R	0h	POR
	Capless regulator short circuit detect indicator.			
ChargePumpSCDet	28	R	0h	POR
	Capless charge pump short circuit detect indicator.			
VRegSel	27:24	RW	ZA=5h ZB=6h	POR
	Capless regulator output voltage multiply ratio Bits [3..2] Reserved Bits [1..0]: 00b = 2*Vbg 01b = 2.1*Vbg 10b = 2.2*Vbg 11b = 2.3*Vbg			
VRegSCRstB	23	RW	0h	POR
	Capless regulator short circuit detect reset: 0 = short circuit detect disabled, 1 = short circuit detect enabled.			
VRegGndShort	22	RW	0h	POR
	Ground the capless regulator output.			
VRegPwd	21	RW	0h	POR
	Capless regulator powerdown.			
ChargePumpSCRstB	20	RW	0h	POR
	Capless charge pump short circuit detect reset: 0 = short circuit detect disabled, 1 = short circuit detect enabled.			
ChargePumpHiZ	19	RW	0h	POR
	Hi-Z the capless charge pump outputs.			
ChargePumpPwd	18	RW	0h	POR
	Capless charge pump powerdown.			
ChargePumpSplyDetOverride	17	RW	0h	POR
	Capless charge pump supply detect override.			

©2014 TEMPO SEMICONDCUTOR, INC..

Field Name	Bits	R/W	Default	Reset
ChargePumpFreqBypass	16	RW	1h	POR
	Capless charge pump frequency reg bypass.			
ChargePumpClkRate	15:12	RW	8h	POR
	Capless charge pump clock rate: 0000b = 800.0kHz (24MHz/30) 0001b = 750.0kHz (24MHz/32) 0010b = 706.9kHz (24MHz/34) 0011b = 666.7kHz (24MHz/36) 0100b = 631.6kHz (24MHz/38) 0101b = 600.0kHz (24MHz/40) 0110b = 571.4kHz (24MHz/42) 0111b = 545.5kHz (24MHz/44) 1000b = 800.0kHz (24MHz/30) 1001b = 857.1kHz (24MHz/28) 1010b = 923.1kHz (24MHz/26) 1011b = 1.000MHz (24MHz/24) 1100b = 1.091MHz (24MHz/22) 1101b = 1.200MHz (24MHz/20) 1110b = 1.333MHz (24MHz/18) 1111b = 1.500MHz (24MHz/16)			
ChargePumpClkDiv	11:9	RW	2h	POR
	Capless charge pump analog clock divider: 001b = No divide 010b = Divide by 2, 50% duty cycle 100b = Divide by 4, 50% duty cycle 110b = Divide by 2, 75% duty cycle 011b = Divide by 4, 75% duty cycle 111b = Divide by 4, 87.5% duty cycle Other values undefined			
ChargePumpClkSel	8	RW	0h	POR
	Capless charge pump clock select: 0 = ring oscillator, 1 = charge pump clock defined by AFGCaplessChargePumpClkRate[3:0] field below.			
PortBPadGnd	7	RW	0h	POR
	Ground the output pad of the capless amplifiers.			
PortBInputGnd	6	RW	0h	POR
	Ground the input to the capless output amplifiers.			
Rsvd3	5	R	0h	N/A (Hard-coded)
	Reserved.			

©2014 TEMPO SEMICONDCUTOR, INC..

Field Name	Bits	R/W	Default	Reset
PortBAntiPopBypass	4	RW	0h	POR
	0 = Enable anti-pop on the capless headphone; 1 = bypass anti-pop on the capless headphone.			
PortAPadGnd	3	RW	0h	NA
	Ground the output pad of the capless amplifiers.			
PortAInputGnd	2	RW	0h	POR
	Ground the input to the capless output amplifiers.			
Rsvd1	1	R	0h	N/A (Hard-coded)
	Reserved.			
PortAAntiPopBypass	0	RW	0h	POR
	0 = Enable anti-pop on the capless headphone; 1 = bypass anti-pop on the capless headphone.			

6.5.30. AFG (NID = 01h): Reset

Reg	Byte 4 (Bits 31:24)	Byte 3 (Bits 23:16)	Byte 2 (Bits 15:8)	Byte 1 (Bits 7:0)
Set				7FFh
Get	FFF00h			

Field Name	Bits	R/W	Default	Reset
Rsvd1	31:8	R	000000h	N/A (Hard-coded)
	Reserved.			
Execute	7:0	W	00h	N/A (Hard-coded)
	Function Reset. Function Group reset is executed when the Set verb 7FF is written with 8-bit payload of 00h. The codec should issue a response to acknowledge receipt of the verb, and then reset the affected Function Group and all associated widgets to their power-on reset values. Some controls such as Configuration Default controls should not be reset. Overlaps Response.			

©2014 TEMPO SEMICONDCUTOR, INC..

6.6. PortA (NID = 0Ah): WCap

Reg	Byte 4 (Bits 31:24)	Byte 3 (Bits 23:16)	Byte 2 (Bits 15:8)	Byte 1 (Bits 7:0)
Set				
Get	F0009h			

Field Name	Bits	R/W	Default	Reset
Rsvd2	31:24	R	00h	N/A (Hard-coded)
	Reserved.			
Type	23:20	R	4h	N/A (Hard-coded)
	Widget type: 0h = Out Converter 1h = In Converter 2h = Summing (Mixer) 3h = Selector (Mux) 4h = Pin Complex 5h = Power 6h = Volume Knob 7h = Beep Generator 8h-Eh = Reserved Fh = Vendor Defined			
Delay	19:16	R	0h	N/A (Hard-coded)
	Number of sample delays through widget.			
Rsvd1	15:12	R	0h	N/A (Hard-coded)
	Reserved.			
SwapCap	11	R	0h	N/A (Hard-coded)
	Left/right swap support: 1 = yes, 0 = no.			
PwrCntrl	10	R	1h	N/A (Hard-coded)
	Power state support: 1 = yes, 0 = no.			
Dig	9	R	0h	N/A (Hard-coded)
	Digital stream support: 1 = yes (digital), 0 = no (analog).			
ConnList	8	R	1h	N/A (Hard-coded)
	Connection list present: 1 = yes, 0 = no.			
UnSolCap	7	R	1h	N/A (Hard-coded)
	Unsolicited response support: 1 = yes, 0 = no.			

©2014 TEMPO SEMICONDCUTOR, INC..

Field Name	Bits	R/W	Default	Reset
ProcWidget	6	R	0h	N/A (Hard-coded)
	Processing state support: 1 = yes, 0 = no.			
Stripe	5	R	0h	N/A (Hard-coded)
	Striping support: 1 = yes, 0 = no.			
FormatOvrd	4	R	0h	N/A (Hard-coded)
	Stream format override: 1 = yes, 0 = no.			
AmpParOvrd	3	R	0h	N/A (Hard-coded)
	Amplifier capabilities override: 1 = yes, no.			
OutAmpPrsnt	2	R	0h	N/A (Hard-coded)
	Output amp present: 1 = yes, 0 = no.			
InAmpPrsnt	1	R	1h	N/A (Hard-coded)
	Input amp present: 1 = yes, 0 = no.			
Stereo	0	R	1h	N/A (Hard-coded)
	Stereo stream support: 1 = yes (stereo), 0 = no (mono).			

6.6.1. PortA (NID = 0Ah): PinCap

Reg	Byte 4 (Bits 31:24)	Byte 3 (Bits 23:16)	Byte 2 (Bits 15:8)	Byte 1 (Bits 7:0)
Set				
Get	F000Ch			

Field Name	Bits	R/W	Default	Reset
Rsvd2	31:17	R	0000h	N/A (Hard-coded)
	Reserved.			
EapdCap	16	R	1h	N/A (Hard-coded)
	EAPD support: 1 = yes, 0 = no.			

©2014 TEMPO SEMICONDCUTOR, INC..

Field Name	Bits	R/W	Default	Reset
VrefCntrl	15:8	R	17h	N/A (Hard-coded)
	Vref support: bit 7 = Reserved bit 6 = Reserved bit 5 = 100% support (1 = yes, 0 = no) bit 4 = 80% support (1 = yes, 0 = no) bit 3 = Reserved bit 2 = GND support (1 = yes, 0 = no) bit 1 = 50% support (1 = yes, 0 = no) bit 0 = Hi-Z support (1 = yes, 0 = no)			
Rsvd1	7	R	0h	N/A (Hard-coded)
	Reserved.			
BalancedIO	6	R	0h	N/A (Hard-coded)
	Balanced I/O support: 1 = yes, 0 = no.			
InCap	5	R	1h	N/A (Hard-coded)
	Input support: 1 = yes, 0 = no.			
OutCap	4	R	1h	N/A (Hard-coded)
	Output support: 1 = yes, 0 = no.			
HdphDrvCap	3	R	1h	N/A (Hard-coded)
	Headphone amp present: 1 = yes, 0 = no.			
PresDtctCap	2	R	1h	N/A (Hard-coded)
	Presence detection support: 1 = yes, 0 = no.			
TrigRqd	1	R	0h	N/A (Hard-coded)
	Trigger required for impedance sense: 1 = yes, 0 = no.			
ImpSenseCap	0	R	0h	N/A (Hard-coded)
	Impedance sense support: 1 = yes, 0 = no.			

6.6.2. PortA (NID = 0Ah): ConLst

Reg	Byte 4 (Bits 31:24)	Byte 3 (Bits 23:16)	Byte 2 (Bits 15:8)	Byte 1 (Bits 7:0)
Set				
Get	F000Eh			

©2014 TEMPO SEMICONDCUTOR, INC..

Field Name	Bits	R/W	Default	Reset
Rsvd	31:8	R	000000h	N/A (Hard-coded)
	Reserved.			
LForm	7	R	0h	N/A (Hard-coded)
	Connection list format: 1 = long-form (15-bit) NID entries, 0 = short-form (7-bit) NID entries.			
ConL	6:0	R	04h	N/A (Hard-coded)
	Number of NID entries in connection list.			

6.6.3. PortA (NID = 0Ah): ConLstEntry0

Reg	Byte 4 (Bits 31:24)	Byte 3 (Bits 23:16)	Byte 2 (Bits 15:8)	Byte 1 (Bits 7:0)
Set				
Get	F0200h			

Field Name	Bits	R/W	Default	Reset
ConL3	31:24	R	23h	N/A (Hard-coded)
	DAC2 Converter widget (0x23) on 92HD66C. 92HD66B this is reserved.			
ConL2	23:16	R	1Ch	N/A (Hard-coded)
	MixerOutVol Selector widget (0x1C)			
ConL1	15:8	R	14h	N/A (Hard-coded)
	DAC1 Converter widget (0x14)			
ConL0	7:0	R	13h	N/A (Hard-coded)
	DAC0 Converter widget (0x13)			

6.6.4. PortA (NID = 0Ah): InAmpLeft

Reg	Byte 4 (Bits 31:24)	Byte 3 (Bits 23:16)	Byte 2 (Bits 15:8)	Byte 1 (Bits 7:0)
Set				360h
Get	B2000h			

©2014 TEMPO SEMICONDCUTOR, INC..

Field Name	Bits	R/W	Default	Reset
Rsvd1	31:2	R	00000000h	N/A (Hard-coded)
	Reserved.			
Gain	1:0	RW	0h	POR - DAFG - ULR
	Amp gain step number (see InAmpCap parameter pertaining to this widget).			

6.6.5. PortA (NID = 0Ah): InAmpRight

Reg	Byte 4 (Bits 31:24)	Byte 3 (Bits 23:16)	Byte 2 (Bits 15:8)	Byte 1 (Bits 7:0)
Set				350h
Get	B0000h			

Field Name	Bits	R/W	Default	Reset
Rsvd1	31:2	R	00000000h	N/A (Hard-coded)
	Reserved.			
Gain	1:0	RW	0h	POR - DAFG - ULR
	Amp gain step number (see InAmpCap parameter pertaining to this widget).			

6.6.6. PortA (NID = 0Ah): ConSelectCtrl

Reg	Byte 4 (Bits 31:24)	Byte 3 (Bits 23:16)	Byte 2 (Bits 15:8)	Byte 1 (Bits 7:0)
Set				701h
Get	F0100h			

Field Name	Bits	R/W	Default	Reset
Rsvd	31:2	R	00000000h	N/A (Hard-coded)
	Reserved.			
Index	1:0	RW	0h	POR - DAFG - ULR
	Connection select control index.			

©2014 TEMPO SEMICONDCUTOR, INC..

6.6.7. PortA (NID = 0Ah): PwrState

Reg	Byte 4 (Bits 31:24)	Byte 3 (Bits 23:16)	Byte 2 (Bits 15:8)	Byte 1 (Bits 7:0)
Set				705h
Get	F0500h			

Field Name	Bits	R/W	Default	Reset
Rsvd4	31:11	R	000000h	N/A (Hard-coded)
	Reserved.			
SettingsReset	10	R	1h	POR - DAFG - ULR
	Indicates if any persistent settings in this Widget have been reset. Cleared by PwrState 'Get', or a 'Set' to any Verb in this Widget.			
Rsvd3	9	R	0h	N/A (Hard-coded)
	Reserved.			
Error	8	R	0h	POR - DAFG - ULR
	Error indicator: 1 = cannot enter requested power state, 0 = no problem with requested power state.			
Rsvd2	7:6	R	0h	N/A (Hard-coded)
	Reserved.			
Act	5:4	R	3h	POR - DAFG - LR
	Actual power state of this widget.			
Rsvd1	3:2	R	0h	N/A (Hard-coded)
	Reserved.			
Set	1:0	RW	0h	POR - DAFG - LR
	Current power state setting for this widget.			

6.6.8. PortA (NID = 0Ah): PinWCntrl

Reg	Byte 4 (Bits 31:24)	Byte 3 (Bits 23:16)	Byte 2 (Bits 15:8)	Byte 1 (Bits 7:0)
Set				707h
Get	F0700h			

©2014 TEMPO SEMICONDCUTOR, INC..

Field Name	Bits	R/W	Default	Reset
Rsvd2	31:8	R	000000h	N/A (Hard-coded)
	Reserved.			
HPhnEn	7	RW	0h	POR - DAFG - ULR
	Headphone amp enable: 1 = enabled, 0 = disabled.			
OutEn	6	RW	0h	POR - DAFG - ULR
	Output enable: 1 = enabled, 0 = disabled.			
InEn	5	RW	0h	POR - DAFG - ULR
	Input enable: 1 = enabled, 0 = disabled.			
Rsvd1	4:3	R	0h	N/A (Hard-coded)
	Reserved.			
VRefEn	2:0	RW	0h	POR - DAFG - ULR
	Vref selection (See VrefCntrl field of PinCap parameter for supported selections): 000b= HI-Z 001b= 50% 010b= GND 011b= Reserved 100b= 80% 101b= 100% 110b= Reserved 111b= Reserved			

6.6.9. PortA (NID = 0Ah): UnsolResp

Reg	Byte 4 (Bits 31:24)	Byte 3 (Bits 23:16)	Byte 2 (Bits 15:8)	Byte 1 (Bits 7:0)
Set				708h
Get	F0800h			

Field Name	Bits	R/W	Default	Reset
Rsvd2	31:8	R	000000h	N/A (Hard-coded)
	Reserved.			

©2014 TEMPO SEMICONDCUTOR, INC..

Field Name	Bits	R/W	Default	Reset
En	7	RW	0h	POR - DAFG - ULR
	Unsolicited response enable (also enables Wake events for this Widget): 1 = enabled, 0 = disabled.			
Rsvd1	6	R	0h	N/A (Hard-coded)
	Reserved.			
Tag	5:0	RW	00h	POR - DAFG - ULR
	Software programmable field returned in top six bits (31:26) of every Unsolicited Response generated by this node.			

6.6.10. PortA (NID = 0Ah): ChSense

Reg	Byte 4 (Bits 31:24)	Byte 3 (Bits 23:16)	Byte 2 (Bits 15:8)	Byte 1 (Bits 7:0)
Set				709h
Get	F0900h			

Field Name	Bits	R/W	Default	Reset
PresDtct	31	R	0h	POR
	Presence detection indicator: 1 = presence detected; 0 = presence not detected.			
Rsvd	30:0	R	00000000h	N/A (Hard-coded)
	Reserved.			

6.6.11. PortA (NID = 0Ah): EAPDBTLLR

Reg	Byte 4 (Bits 31:24)	Byte 3 (Bits 23:16)	Byte 2 (Bits 15:8)	Byte 1 (Bits 7:0)
Set				70Ch
Get	F0C00h			

Field Name	Bits	R/W	Default	Reset
Rsvd2	31:2	R	00000000h	N/A (Hard-coded)
	Reserved.			

©2014 TEMPO SEMICONDCUTOR, INC..

Field Name	Bits	R/W	Default	Reset
EAPD	1	RW	1h	POR - DAFG - ULR
	EAPD control: 1 = set EAPD pin to 1 (powered) up if this pin is powered up, 0 = set EAPD pin to 0.			
Rsvd1	0	R	0h	N/A (Hard-coded)
	Reserved.			

6.6.12. PortA (NID = 0Ah): ConfigDefault

Reg	Byte 4 (Bits 31:24)	Byte 3 (Bits 23:16)	Byte 2 (Bits 15:8)	Byte 1 (Bits 7:0)
Set	71Fh	71Eh	71Dh	71Ch
Get	F1F00h / F1E00h / F1D00h / F1C00h			

Field Name	Bits	R/W	Default	Reset
PortConnectivity	31:30	RW	0h	POR
	Port connectivity: 0h = Port complex is connected to a jack 1h = No physical connection for port 2h = Fixed function device is attached 3h = Both jack and internal device attached (info in all other fields refers to integrated device, any presence detection refers to jack)			
Location	29:24	RW	02h	POR
	Location Bits [5..4]: 0h = External on primary chassis 1h = Internal 2h = Separate chassis 3h = Other Bits [3..0]: 0h = N/A 1h = Rear 2h = Front 3h = Left 4h = Right 5h = Top 6h = Bottom 7h-9h = Special Ah-Fh = Reserved			

©2014 TEMPO SEMICONDCUTOR, INC..

Field Name	Bits	R/W	Default	Reset
Device	23:20	RW	2h	POR
	Default device: 0h = Line out 1h = Speaker 2h = HP out 3h = CD 4h = SPDIF Out 5h = Digital other out 6h = Modem line side 7h = Modem handset side 8h = Line in 9h = Aux Ah = Mic in Bh = Telephony Ch = SPDIF In Dh = Digital other in Eh = Reserved Fh = Other			
ConnectionType	19:16	RW	1h	POR
	Connection type: 0h = Unknown 1h = 1/8" stereo/mono 2h = 1/4" stereo/mono 3h = ATAPI internal 4h = RCA 5h = Optical 6h = Other digital 7h = Other analog 8h = Multichannel analog (DIN) 9h = XLR/Professional Ah = RJ-11 (modem) Bh = Combination Ch-Eh = Reserved Fh = Other			

©2014 TEMPO SEMICONDCUTOR, INC..

Field Name	Bits	R/W	Default	Reset
Color	15:12	RW	4h	POR
	Color: 0h = Unknown 1h = Black 2h = Grey 3h = Blue 4h = Green 5h = Red 6h = Orange 7h = Yellow 8h = Purple 9h = Pink Ah-Dh = Reserved Eh = White Fh = Other			
Misc	11:8	RW	0h	POR
	Miscellaneous: Bits [3..1] = Reserved Bit 0 = Jack detect override			
Association	7:4	RW	1h	POR
	Default assocation.			
Sequence	3:0	RW	0h	POR
	Sequence.			

6.7. PortB (NID = 0Bh): WCap

Reg	Byte 4 (Bits 31:24)	Byte 3 (Bits 23:16)	Byte 2 (Bits 15:8)	Byte 1 (Bits 7:0)
Set				
Get	F0009h			

Field Name	Bits	R/W	Default	Reset
Rsvd2	31:24	R	00h	N/A (Hard-coded)
	Reserved.			

©2014 TEMPO SEMICONDCUTOR, INC..

Field Name	Bits	R/W	Default	Reset
Type	23:20	R	4h	N/A (Hard-coded)
	Widget type: 0h = Out Converter 1h = In Converter 2h = Summing (Mixer) 3h = Selector (Mux) 4h = Pin Complex 5h = Power 6h = Volume Knob 7h = Beep Generator 8h-Eh = Reserved Fh = Vendor Defined			
Delay	19:16	R	0h	N/A (Hard-coded)
	Number of sample delays through widget.			
Rsvd1	15:12	R	0h	N/A (Hard-coded)
	Reserved.			
SwapCap	11	R	0h	N/A (Hard-coded)
	Left/right swap support: 1 = yes, 0 = no.			
PwrCntrl	10	R	1h	N/A (Hard-coded)
	Power state support: 1 = yes, 0 = no.			
Dig	9	R	0h	N/A (Hard-coded)
	Digital stream support: 1 = yes (digital), 0 = no (analog).			
ConnList	8	R	1h	N/A (Hard-coded)
	Connection list present: 1 = yes, 0 = no.			
UnSolCap	7	R	1h	N/A (Hard-coded)
	Unsolicited response support: 1 = yes, 0 = no.			
ProcWidget	6	R	0h	N/A (Hard-coded)
	Processing state support: 1 = yes, 0 = no.			
Stripe	5	R	0h	N/A (Hard-coded)
	Striping support: 1 = yes, 0 = no.			
FormatOvrd	4	R	0h	N/A (Hard-coded)
	Stream format override: 1 = yes, 0 = no.			

©2014 TEMPO SEMICONDCUTOR, INC..

Field Name	Bits	R/W	Default	Reset
AmpParOvrd	3	R	0h	N/A (Hard-coded)
	Amplifier capabilities override: 1 = yes, no.			
OutAmpPrsnt	2	R	0h	N/A (Hard-coded)
	Output amp present: 1 = yes, 0 = no.			
InAmpPrsnt	1	R	1h	N/A (Hard-coded)
	Input amp present: 1 = yes, 0 = no.			
Stereo	0	R	1h	N/A (Hard-coded)
	Stereo stream support: 1 = yes (stereo), 0 = no (mono).			

6.7.1. PortB (NID = 0Bh): PinCap

Reg	Byte 4 (Bits 31:24)	Byte 3 (Bits 23:16)	Byte 2 (Bits 15:8)	Byte 1 (Bits 7:0)
Set				
Get	F000Ch			

Field Name	Bits	R/W	Default	Reset
Rsvd2	31:17	R	0000h	N/A (Hard-coded)
	Reserved.			
EapdCap	16	R	1h	N/A (Hard-coded)
	EAPD support: 1 = yes, 0 = no.			
VrefCntrl	15:8	R	17h	N/A (Hard-coded)
	Vref support: bit 7 = Reserved bit 6 = Reserved bit 5 = 100% support (1 = yes, 0 = no) bit 4 = 80% support (1 = yes, 0 = no) bit 3 = Reserved bit 2 = GND support (1 = yes, 0 = no) bit 1 = 50% support (1 = yes, 0 = no) bit 0 = Hi-Z support (1 = yes, 0 = no)			
Rsvd1	7	R	0h	N/A (Hard-coded)
	Reserved.			

©2014 TEMPO SEMICONDCUTOR, INC..

Field Name	Bits	R/W	Default	Reset
BalancedIO	6	R	0h	N/A (Hard-coded)
	Balanced I/O support: 1 = yes, 0 = no.			
InCap	5	R	1h	N/A (Hard-coded)
	Input support: 1 = yes, 0 = no.			
OutCap	4	R	1h	N/A (Hard-coded)
	Output support: 1 = yes, 0 = no.			
HdphDrvCap	3	R	1h	N/A (Hard-coded)
	Headphone amp present: 1 = yes, 0 = no.			
PresDtctCap	2	R	1h	N/A (Hard-coded)
	Presence detection support: 1 = yes, 0 = no.			
TrigRqd	1	R	0h	N/A (Hard-coded)
	Trigger required for impedance sense: 1 = yes, 0 = no.			
ImpSenseCap	0	R	0h	N/A (Hard-coded)
	Impedance sense support: 1 = yes, 0 = no.			

6.7.2. PortB (NID = 0Bh): ConLst

Reg	Byte 4 (Bits 31:24)	Byte 3 (Bits 23:16)	Byte 2 (Bits 15:8)	Byte 1 (Bits 7:0)
Set				
Get	F000Eh			

Field Name	Bits	R/W	Default	Reset
Rsvd	31:8	R	000000h	N/A (Hard-coded)
	Reserved.			
LForm	7	R	0h	N/A (Hard-coded)
	Connection list format: 1 = long-form (15-bit) NID entries, 0 = short-form (7-bit) NID entries.			
ConL	6:0	R	04h	N/A (Hard-coded)
	Number of NID entries in connection list.			

©2014 TEMPO SEMICONDCUTOR, INC..

6.7.3. PortB (NID = 0Bh): ConLstEntry0

Reg	Byte 4 (Bits 31:24)	Byte 3 (Bits 23:16)	Byte 2 (Bits 15:8)	Byte 1 (Bits 7:0)
Set				
Get	F0200h			

Field Name	Bits	R/W	Default	Reset
ConL3	31:24	R	23h	N/A (Hard-coded)
	DAC2 Converter widget (0x23) on 92HD66C. 92HD66B this is reserved.			
ConL2	23:16	R	1Ch	N/A (Hard-coded)
	MixerOutVol Selector widget (0x1C)			
ConL1	15:8	R	14h	N/A (Hard-coded)
	DAC1 Converter widget (0x14)			
ConL0	7:0	R	13h	N/A (Hard-coded)
	DAC0 Converter widget (0x13)			

6.7.4. PortB (NID = 0Bh): InAmpLeft

Reg	Byte 4 (Bits 31:24)	Byte 3 (Bits 23:16)	Byte 2 (Bits 15:8)	Byte 1 (Bits 7:0)
Set				360h
Get	B2000h			

Field Name	Bits	R/W	Default	Reset
Rsvd1	31:2	R	00000000h	N/A (Hard-coded)
	Reserved.			
Gain	1:0	RW	0h	POR - DAFG - ULR
	Amp gain step number (see InAmpCap parameter pertaining to this widget.			

©2014 TEMPO SEMICONDCUTOR, INC..

6.7.5. PortB (NID = 0Bh): InAmpRight

Reg	Byte 4 (Bits 31:24)	Byte 3 (Bits 23:16)	Byte 2 (Bits 15:8)	Byte 1 (Bits 7:0)
Set				350h
Get	B0000h			

Field Name	Bits	R/W	Default	Reset
Rsvd1	31:2	R	00000000h	N/A (Hard-coded)
	Reserved.			
Gain	1:0	RW	0h	POR - DAFG - ULR
	Amp gain step number (see InAmpCap parameter pertaining to this widget.			

6.7.6. PortB (NID = 0Bh): ConSelectCtrl

Reg	Byte 4 (Bits 31:24)	Byte 3 (Bits 23:16)	Byte 2 (Bits 15:8)	Byte 1 (Bits 7:0)
Set				701h
Get	F0100h			

Field Name	Bits	R/W	Default	Reset
Rsvd	31:2	R	00000000h	N/A (Hard-coded)
	Reserved.			
Index	1:0	RW	0h	POR - DAFG - ULR
	Connection select control index.			

6.7.7. PortB (NID = 0Bh): PwrState

Reg	Byte 4 (Bits 31:24)	Byte 3 (Bits 23:16)	Byte 2 (Bits 15:8)	Byte 1 (Bits 7:0)
Set				705h
Get	F0500h			

Field Name	Bits	R/W	Default	Reset
Rsvd4	31:11	R	000000h	N/A (Hard-coded)
	Reserved.			

©2014 TEMPO SEMICONDCUTOR, INC..

Field Name	Bits	R/W	Default	Reset
SettingsReset	10	R	1h	POR - DAFG - ULR
	Indicates if any persistent settings in this Widget have been reset. Cleared by PwrState 'Get', or a 'Set' to any Verb in this Widget.			
Rsvd3	9	R	0h	N/A (Hard-coded)
	Reserved.			
Error	8	R	0h	POR - DAFG - ULR
	Error indicator: 1 = cannot enter requested power state, 0 = no problem with requested power state.			
Rsvd2	7:6	R	0h	N/A (Hard-coded)
	Reserved.			
Act	5:4	R	3h	POR - DAFG - LR
	Actual power state of this widget.			
Rsvd1	3:2	R	0h	N/A (Hard-coded)
	Reserved.			
Set	1:0	RW	0h	POR - DAFG - LR
	Current power state setting for this widget.			

6.7.8. PortB (NID = 0Bh): PinWCntrl

Reg	Byte 4 (Bits 31:24)	Byte 3 (Bits 23:16)	Byte 2 (Bits 15:8)	Byte 1 (Bits 7:0)
Set				707h
Get	F0700h			

Field Name	Bits	R/W	Default	Reset
Rsvd2	31:8	R	000000h	N/A (Hard-coded)
	Reserved.			
HPhnEn	7	RW	0h	POR - DAFG - ULR
	Headphone amp enable: 1 = enabled, 0 = disabled.			
OutEn	6	RW	0h	POR - DAFG - ULR
	Output enable: 1 = enabled, 0 = disabled.			

©2014 TEMPO SEMICONDCUTOR, INC..

Field Name	Bits	R/W	Default	Reset
InEn	5	RW	0h	POR - DAFG - ULR
	Input enable: 1 = enabled, 0 = disabled.			
Rsvd1	4:3	R	0h	N/A (Hard-coded)
	Reserved.			
VRefEn	2:0	RW	0h	POR - DAFG - ULR
	Vref selection (See VrefCntrl field of PinCap parameter for supported selections): 000b= HI-Z 001b= 50% 010b= GND 011b= Reserved 100b= 80% 101b= 100% 110b= Reserved 111b= Reserved			

6.7.9. PortB (NID = 0Bh): UnsolResp

Reg	Byte 4 (Bits 31:24)	Byte 3 (Bits 23:16)	Byte 2 (Bits 15:8)	Byte 1 (Bits 7:0)
Set				708h
Get	F0800h			

Field Name	Bits	R/W	Default	Reset
Rsvd2	31:8	R	000000h	N/A (Hard-coded)
	Reserved.			
En	7	RW	0h	POR - DAFG - ULR
	Unsolicited response enable (also enables Wake events for this Widget): 1 = enabled, 0 = disabled.			
Rsvd1	6	R	0h	N/A (Hard-coded)
	Reserved.			
Tag	5:0	RW	00h	POR - DAFG - ULR
	Software programmable field returned in top six bits (31:26) of every Unsolicited Response generated by this node.			

©2014 TEMPO SEMICONDCUTOR, INC..

6.7.10. PortB (NID = 0Bh): ChSense

Reg	Byte 4 (Bits 31:24)	Byte 3 (Bits 23:16)	Byte 2 (Bits 15:8)	Byte 1 (Bits 7:0)
Set				709h
Get	F0900h			

Field Name	Bits	R/W	Default	Reset
PresDtct	31	R	0h	POR
	Presence detection indicator: 1 = presence detected; 0 = presence not detected.			
Rsvd	30:0	R	00000000h	N/A (Hard-coded)
	Reserved.			

6.7.11. PortB (NID = 0Bh): EAPDBTLLR

Reg	Byte 4 (Bits 31:24)	Byte 3 (Bits 23:16)	Byte 2 (Bits 15:8)	Byte 1 (Bits 7:0)
Set				70Ch
Get	F0C00h			

Field Name	Bits	R/W	Default	Reset
Rsvd2	31:2	R	00000000h	N/A (Hard-coded)
	Reserved.			
EAPD	1	RW	1h	POR - DAFG - ULR
	EAPD control: 1 = set EAPD pin to 1 (powered) up if this pin is powered up, 0 = set EAPD pin to 0.			
Rsvd1	0	R	0h	N/A (Hard-coded)
	Reserved.			

6.7.12. PortB (NID = 0Bh): ConfigDefault

Reg	Byte 4 (Bits 31:24)	Byte 3 (Bits 23:16)	Byte 2 (Bits 15:8)	Byte 1 (Bits 7:0)
Set	71Fh	71Eh	71Dh	71Ch
Get	F1F00h / F1E00h / F1D00h / F1C00h			

©2014 TEMPO SEMICONDCUTOR, INC..

Field Name	Bits	R/W	Default	Reset
PortConnectivity	31:30	RW	0h	POR
	Port connectivity: 0h = Port complex is connected to a jack 1h = No physical connection for port 2h = Fixed function device is attached 3h = Both jack and internal device attached (info in all other fields refers to integrated device, any presence detection refers to jack)			
Location	29:24	RW	02h	POR
	Location Bits [5..4]: 0h = External on primary chassis 1h = Internal 2h = Separate chassis 3h = Other Bits [3..0]: 0h = N/A 1h = Rear 2h = Front 3h = Left 4h = Right 5h = Top 6h = Bottom 7h-9h = Special Ah-Fh = Reserved			
Device	23:20	RW	Ah	POR
	Default device: 0h = Line out 1h = Speaker 2h = HP out 3h = CD 4h = SPDIF Out 5h = Digital other out 6h = Modem line side 7h = Modem handset side 8h = Line in 9h = Aux Ah = Mic in Bh = Telephony Ch = SPDIF In Dh = Digital other in Eh = Reserved Fh = Other			

©2014 TEMPO SEMICONDCUTOR, INC..

Field Name	Bits	R/W	Default	Reset
ConnectionType	19:16	RW	1h	POR
	Connection type: 0h = Unknown 1h = 1/8" stereo/mono 2h = 1/4" stereo/mono 3h = ATAPI internal 4h = RCA 5h = Optical 6h = Other digital 7h = Other analog 8h = Multichannel analog (DIN) 9h = XLR/Professional Ah = RJ-11 (modem) Bh = Combination Ch-Eh = Reserved Fh = Other			
Color	15:12	RW	9h	POR
	Color: 0h = Unknown 1h = Black 2h = Grey 3h = Blue 4h = Green 5h = Red 6h = Orange 7h = Yellow 8h = Purple 9h = Pink Ah-Dh = Reserved Eh = White Fh = Other			
Misc	11:8	RW	0h	POR
	Miscellaneous: Bits [3..1] = Reserved Bit 0 = Jack detect override			
Association	7:4	RW	2h	POR
	Default association.			
Sequence	3:0	RW	0h	POR
	Sequence.			

©2014 TEMPO SEMICONDCUTOR, INC..

6.8. PortC (NID = 0Ch): WCap

Reg	Byte 4 (Bits 31:24)	Byte 3 (Bits 23:16)	Byte 2 (Bits 15:8)	Byte 1 (Bits 7:0)
Set				
Get	F0009h			

Field Name	Bits	R/W	Default	Reset
Rsvd2	31:24	R	00h	N/A (Hard-coded)
	Reserved.			
Type	23:20	R	4h	N/A (Hard-coded)
	Widget type: 0h = Out Converter 1h = In Converter 2h = Summing (Mixer) 3h = Selector (Mux) 4h = Pin Complex 5h = Power 6h = Volume Knob 7h = Beep Generator 8h-Eh = Reserved Fh = Vendor Defined			
Delay	19:16	R	0h	N/A (Hard-coded)
	Number of sample delays through widget.			
Rsvd1	15:12	R	0h	N/A (Hard-coded)
	Reserved.			
SwapCap	11	R	0h	N/A (Hard-coded)
	Left/right swap support: 1 = yes, 0 = no.			
PwrCntrl	10	R	1h	N/A (Hard-coded)
	Power state support: 1 = yes, 0 = no.			
Dig	9	R	0h	N/A (Hard-coded)
	Digital stream support: 1 = yes (digital), 0 = no (analog).			
ConnList	8	R	1h	N/A (Hard-coded)
	Connection list present: 1 = yes, 0 = no.			
UnSolCap	7	R	1h	N/A (Hard-coded)
	Unsolicited response support: 1 = yes, 0 = no.			

©2014 TEMPO SEMICONDCUTOR, INC..

Field Name	Bits	R/W	Default	Reset
ProcWidget	6	R	0h	N/A (Hard-coded)
	Processing state support: 1 = yes, 0 = no.			
Stripe	5	R	0h	N/A (Hard-coded)
	Striping support: 1 = yes, 0 = no.			
FormatOvrd	4	R	0h	N/A (Hard-coded)
	Stream format override: 1 = yes, 0 = no.			
AmpParOvrd	3	R	0h	N/A (Hard-coded)
	Amplifier capabilities override: 1 = yes, no.			
OutAmpPrsnt	2	R	0h	N/A (Hard-coded)
	Output amp present: 1 = yes, 0 = no.			
InAmpPrsnt	1	R	1h	N/A (Hard-coded)
	Input amp present: 1 = yes, 0 = no.			
Stereo	0	R	1h	N/A (Hard-coded)
	Stereo stream support: 1 = yes (stereo), 0 = no (mono).			

6.8.1. PortC (NID = 0Ch): PinCap

Reg	Byte 4 (Bits 31:24)	Byte 3 (Bits 23:16)	Byte 2 (Bits 15:8)	Byte 1 (Bits 7:0)
Set				
Get	F000Ch			

Field Name	Bits	R/W	Default	Reset
Rsvd2	31:17	R	0000h	N/A (Hard-coded)
	Reserved.			
EapdCap	16	R	1h	N/A (Hard-coded)
	EAPD support: 1 = yes, 0 = no.			

©2014 TEMPO SEMICONDCUTOR, INC..

Field Name	Bits	R/W	Default	Reset
VrefCntrl	15:8	R	17h	N/A (Hard-coded)
	Vref support: bit 7 = Reserved bit 6 = Reserved bit 5 = 100% support (1 = yes, 0 = no) bit 4 = 80% support (1 = yes, 0 = no) bit 3 = Reserved bit 2 = GND support (1 = yes, 0 = no) bit 1 = 50% support (1 = yes, 0 = no) bit 0 = Hi-Z support (1 = yes, 0 = no)			
Rsvd1	7	R	0h	N/A (Hard-coded)
	Reserved.			
BalancedIO	6	R	0h	N/A (Hard-coded)
	Balanced I/O support: 1 = yes, 0 = no.			
InCap	5	R	1h	N/A (Hard-coded)
	Input support: 1 = yes, 0 = no.			
OutCap	4	R	1h	N/A (Hard-coded)
	Output support: 1 = yes, 0 = no.			
HdphDrvCap	3	R	0h	N/A (Hard-coded)
	Headphone amp present: 1 = yes, 0 = no.			
PresDtctCap	2	R	1h	N/A (Hard-coded)
	Presence detection support: 1 = yes, 0 = no.			
TrigRqd	1	R	0h	N/A (Hard-coded)
	Trigger required for impedance sense: 1 = yes, 0 = no.			
ImpSenseCap	0	R	0h	N/A (Hard-coded)
	Impedance sense support: 1 = yes, 0 = no.			

6.8.2. PortC (NID = 0Ch): ConLst

Reg	Byte 4 (Bits 31:24)	Byte 3 (Bits 23:16)	Byte 2 (Bits 15:8)	Byte 1 (Bits 7:0)
Set				
Get	F000Eh			

©2014 TEMPO SEMICONDCUTOR, INC..

Field Name	Bits	R/W	Default	Reset
Rsvd	31:8	R	000000h	N/A (Hard-coded)
	Reserved.			
LForm	7	R	0h	N/A (Hard-coded)
	Connection list format: 1 = long-form (15-bit) NID entries, 0 = short-form (7-bit) NID entries.			
ConL	6:0	R	04h	N/A (Hard-coded)
	Number of NID entries in connection list.			

6.8.3. PortC (NID = 0Ch): ConLstEntry0

Reg	Byte 4 (Bits 31:24)	Byte 3 (Bits 23:16)	Byte 2 (Bits 15:8)	Byte 1 (Bits 7:0)
Set				
Get	F0200h			

Field Name	Bits	R/W	Default	Reset
ConL3	31:24	R	23h	N/A (Hard-coded)
	DAC2 converter widget (0x23) on 92HD66C. 92HD66B this is reserved.			
ConL2	23:16	R	1Ch	N/A (Hard-coded)
	MixerOutVol Selector widget (0x1C)			
ConL1	15:8	R	14h	N/A (Hard-coded)
	DAC1 Converter widget (0x14)			
ConL0	7:0	R	13h	N/A (Hard-coded)
	DAC0 Converter widget (0x13)			

6.8.4. PortC (NID = 0Ch): InAmpLeft

Reg	Byte 4 (Bits 31:24)	Byte 3 (Bits 23:16)	Byte 2 (Bits 15:8)	Byte 1 (Bits 7:0)
Set				360h
Get	B2000h			

©2014 TEMPO SEMICONDCUTOR, INC..

Field Name	Bits	R/W	Default	Reset
Rsvd1	31:2	R	00000000h	N/A (Hard-coded)
	Reserved.			
Gain	1:0	RW	0h	POR - DAFG - ULR
	Amp gain step number (see InAmpCap parameter pertaining to this widget).			

6.8.5. PortC (NID = 0Ch): InAmpRight

Reg	Byte 4 (Bits 31:24)	Byte 3 (Bits 23:16)	Byte 2 (Bits 15:8)	Byte 1 (Bits 7:0)
Set				350h
Get	B0000h			

Field Name	Bits	R/W	Default	Reset
Rsvd1	31:2	R	00000000h	N/A (Hard-coded)
	Reserved.			
Gain	1:0	RW	0h	POR - DAFG - ULR
	Amp gain step number (see InAmpCap parameter pertaining to this widget).			

6.8.6. PortC (NID = 0Ch): ConSelectCtrl

Reg	Byte 4 (Bits 31:24)	Byte 3 (Bits 23:16)	Byte 2 (Bits 15:8)	Byte 1 (Bits 7:0)
Set				701h
Get	F0100h			

Field Name	Bits	R/W	Default	Reset
Rsvd	31:2	R	00000000h	N/A (Hard-coded)
	Reserved.			
Index	1:0	RW	0h	POR - DAFG - ULR
	Connection select control index.			

©2014 TEMPO SEMICONDCUTOR, INC..

6.8.7. PortC (NID = 0Ch): PwrState

Reg	Byte 4 (Bits 31:24)	Byte 3 (Bits 23:16)	Byte 2 (Bits 15:8)	Byte 1 (Bits 7:0)
Set				705h
Get	F0500h			

Field Name	Bits	R/W	Default	Reset
Rsvd4	31:11	R	000000h	N/A (Hard-coded)
	Reserved.			
SettingsReset	10	R	1h	POR - DAFG - ULR
	Indicates if any persistent settings in this Widget have been reset. Cleared by PwrState 'Get', or a 'Set' to any Verb in this Widget.			
Rsvd3	9	R	0h	N/A (Hard-coded)
	Reserved.			
Error	8	R	0h	POR - DAFG - ULR
	Error indicator: 1 = cannot enter requested power state, 0 = no problem with requested power state.			
Rsvd2	7:6	R	0h	N/A (Hard-coded)
	Reserved.			
Act	5:4	R	3h	POR - DAFG - LR
	Actual power state of this widget.			
Rsvd1	3:2	R	0h	N/A (Hard-coded)
	Reserved.			
Set	1:0	RW	0h	POR - DAFG - LR
	Current power state setting for this widget.			

6.8.8. PortC (NID = 0Ch): PinWCntrl

Reg	Byte 4 (Bits 31:24)	Byte 3 (Bits 23:16)	Byte 2 (Bits 15:8)	Byte 1 (Bits 7:0)
Set				707h
Get	F0700h			

©2014 TEMPO SEMICONDCUTOR, INC..

Field Name	Bits	R/W	Default	Reset
Rsvd2	31:7	R	000000h	N/A (Hard-coded)
	Reserved.			
OutEn	6	RW	0h	POR - DAFG - ULR
	Output enable: 1 = enabled, 0 = disabled.			
InEn	5	RW	0h	POR - DAFG - ULR
	Input enable: 1 = enabled, 0 = disabled.			
Rsvd1	4:3	R	0h	N/A (Hard-coded)
	Reserved.			
VRefEn	2:0	RW	0h	POR - DAFG - ULR
	Vref selection (See VrefCntrl field of PinCap parameter for supported selections): 000b= HI-Z 001b= 50% 010b= GND 011b= Reserved 100b= 80% 101b= 100% 110b= Reserved 111b= Reserved			

6.8.9. PortC (NID = 0Ch): UnsolResp

Reg	Byte 4 (Bits 31:24)	Byte 3 (Bits 23:16)	Byte 2 (Bits 15:8)	Byte 1 (Bits 7:0)
Set				708h
Get	F0800h			

Field Name	Bits	R/W	Default	Reset
Rsvd2	31:8	R	000000h	N/A (Hard-coded)
	Reserved.			
En	7	RW	0h	POR - DAFG - ULR
	Unsolicited response enable (also enables Wake events for this Widget): 1 = enabled, 0 = disabled.			

©2014 TEMPO SEMICONDCUTOR, INC..

Field Name	Bits	R/W	Default	Reset
Rsvd1	6	R	0h	N/A (Hard-coded)
	Reserved.			
Tag	5:0	RW	00h	POR - DAFG - ULR
	Software programmable field returned in top six bits (31:26) of every Unsolicited Response generated by this node.			

6.8.10. PortC (NID = 0Ch): ChSense

Reg	Byte 4 (Bits 31:24)	Byte 3 (Bits 23:16)	Byte 2 (Bits 15:8)	Byte 1 (Bits 7:0)
Set				709h
Get	F0900h			

Field Name	Bits	R/W	Default	Reset
PresDtct	31	R	0h	POR
	Presence detection indicator: 1 = presence detected; 0 = presence not detected.			
Rsvd	30:0	R	00000000h	N/A (Hard-coded)
	Reserved.			

6.8.11. PortC (NID = 0Ch): EAPDBTLLR

Reg	Byte 4 (Bits 31:24)	Byte 3 (Bits 23:16)	Byte 2 (Bits 15:8)	Byte 1 (Bits 7:0)
Set				70Ch
Get	F0C00h			

Field Name	Bits	R/W	Default	Reset
Rsvd2	31:2	R	00000000h	N/A (Hard-coded)
	Reserved.			
EAPD	1	RW	1h	POR - DAFG - ULR
	EAPD control: 1 = set EAPD pin to 1 (powered) up if this pin is powered up, 0 = set EAPD pin to 0.			

©2014 TEMPO SEMICONDCUTOR, INC..

Field Name	Bits	R/W	Default	Reset
Rsvd1	0	R	0h	N/A (Hard-coded)
	Reserved.			

6.8.12. PortC (NID = 0Ch): ConfigDefault

Reg	Byte 4 (Bits 31:24)	Byte 3 (Bits 23:16)	Byte 2 (Bits 15:8)	Byte 1 (Bits 7:0)
Set	71Fh	71Eh	71Dh	71Ch
Get	F1F00h / F1E00h / F1D00h / F1C00h			

Field Name	Bits	R/W	Default	Reset
PortConnectivity	31:30	RW	0h	POR
	Port connectivity: 0h = Port complex is connected to a jack 1h = No physical connection for port 2h = Fixed function device is attached 3h = Both jack and internal device attached (info in all other fields refers to integrated device, any presence detection refers to jack)			
Location	29:24	RW	01h	POR
	Location Bits [5..4]: 0h = External on primary chassis 1h = Internal 2h = Separate chassis 3h = Other Bits [3..0]: 0h = N/A 1h = Rear 2h = Front 3h = Left 4h = Right 5h = Top 6h = Bottom 7h-9h = Special Ah-Fh = Reserved			

©2014 TEMPO SEMICONDCUTOR, INC..

Field Name	Bits	R/W	Default	Reset
Device	23:20	RW	8h	POR
	Default device: 0h = Line out 1h = Speaker 2h = HP out 3h = CD 4h = SPDIF Out 5h = Digital other out 6h = Modem line side 7h = Modem handset side 8h = Line in 9h = Aux Ah = Mic in Bh = Telephony Ch = SPDIF In Dh = Digital other in Eh = Reserved Fh = Other			
ConnectionType	19:16	RW	1h	POR
	Connection type: 0h = Unknown 1h = 1/8" stereo/mono 2h = 1/4" stereo/mono 3h = ATAPI internal 4h = RCA 5h = Optical 6h = Other digital 7h = Other analog 8h = Multichannel analog (DIN) 9h = XLR/Professional Ah = RJ-11 (modem) Bh = Combination Ch-Eh = Reserved Fh = Other			

©2014 TEMPO SEMICONDCUTOR, INC..

Field Name	Bits	R/W	Default	Reset
Color	15:12	RW	3h	POR
	Color: 0h = Unknown 1h = Black 2h = Grey 3h = Blue 4h = Green 5h = Red 6h = Orange 7h = Yellow 8h = Purple 9h = Pink Ah-Dh = Reserved Eh = White Fh = Other			
Misc	11:8	RW	0h	POR
	Miscellaneous: Bits [3..1] = Reserved Bit 0 = Jack detect override			
Association	7:4	RW	4h	POR
	Default association.			
Sequence	3:0	RW	Eh	POR
	Sequence.			

6.9. NID = 0Dh Reserved

6.10. PortE (NID = 0Eh): WCap (Available only on 48-pin versions)

Reg	Byte 4 (Bits 31:24)	Byte 3 (Bits 23:16)	Byte 2 (Bits 15:8)	Byte 1 (Bits 7:0)
Set				
Get	F0009h			

Field Name	Bits	R/W	Default	Reset
Rsvd2	31:24	R	00h	N/A (Hard-coded)
	Reserved.			

©2014 TEMPO SEMICONDCUTOR, INC..

Field Name	Bits	R/W	Default	Reset
Type	23:20	R	4h	N/A (Hard-coded)
	Widget type: 0h = Out Converter 1h = In Converter 2h = Summing (Mixer) 3h = Selector (Mux) 4h = Pin Complex 5h = Power 6h = Volume Knob 7h = Beep Generator 8h-Eh = Reserved Fh = Vendor Defined			
Delay	19:16	R	0h	N/A (Hard-coded)
	Number of sample delays through widget.			
Rsvd1	15:12	R	0h	N/A (Hard-coded)
	Reserved.			
SwapCap	11	R	0h	N/A (Hard-coded)
	Left/right swap support: 1 = yes, 0 = no.			
PwrCntrl	10	R	1h	N/A (Hard-coded)
	Power state support: 1 = yes, 0 = no.			
Dig	9	R	0h	N/A (Hard-coded)
	Digital stream support: 1 = yes (digital), 0 = no (analog).			
ConnList	8	R	1h	N/A (Hard-coded)
	Connection list present: 1 = yes, 0 = no.			
UnSolCap	7	R	1h	N/A (Hard-coded)
	Unsolicited response support: 1 = yes, 0 = no.			
ProcWidget	6	R	0h	N/A (Hard-coded)
	Processing state support: 1 = yes, 0 = no.			
Stripe	5	R	0h	N/A (Hard-coded)
	Striping support: 1 = yes, 0 = no.			
FormatOvrd	4	R	0h	N/A (Hard-coded)
	Stream format override: 1 = yes, 0 = no.			

©2014 TEMPO SEMICONDCUTOR, INC..

Field Name	Bits	R/W	Default	Reset
AmpParOvrd	3	R	0h	N/A (Hard-coded)
	Amplifier capabilities override: 1 = yes, no.			
OutAmpPrsnt	2	R	0h	N/A (Hard-coded)
	Output amp present: 1 = yes, 0 = no.			
InAmpPrsnt	1	R	1h	N/A (Hard-coded)
	Input amp present: 1 = yes, 0 = no.			
Stereo	0	R	1h	N/A (Hard-coded)
	Stereo stream support: 1 = yes (stereo), 0 = no (mono).			

6.10.1. PortE (NID = 0Eh): PinCap (Available only on 48-pin versions)

Reg	Byte 4 (Bits 31:24)	Byte 3 (Bits 23:16)	Byte 2 (Bits 15:8)	Byte 1 (Bits 7:0)
Set				
Get	F000Ch			

Field Name	Bits	R/W	Default	Reset
Rsvd2	31:17	R	0000h	N/A (Hard-coded)
	Reserved.			
EapdCap	16	R	1h	N/A (Hard-coded)
	EAPD support: 1 = yes, 0 = no.			
VrefCntrl	15:8	R	17h	N/A (Hard-coded)
	Vref support: bit 7 = Reserved bit 6 = Reserved bit 5 = 100% support (1 = yes, 0 = no) bit 4 = 80% support (1 = yes, 0 = no) bit 3 = Reserved bit 2 = GND support (1 = yes, 0 = no) bit 1 = 50% support (1 = yes, 0 = no) bit 0 = Hi-Z support (1 = yes, 0 = no)			
Rsvd1	7	R	0h	N/A (Hard-coded)
	Reserved.			

©2014 TEMPO SEMICONDCUTOR, INC..

Field Name	Bits	R/W	Default	Reset
BalancedIO	6	R	0h	N/A (Hard-coded)
	Balanced I/O support: 1 = yes, 0 = no.			
InCap	5	R	1h	N/A (Hard-coded)
	Input support: 1 = yes, 0 = no.			
OutCap	4	R	1h	N/A (Hard-coded)
	Output support: 1 = yes, 0 = no.			
HdphDrvCap	3	R	0h	N/A (Hard-coded)
	Headphone amp present: 1 = yes, 0 = no.			
PresDtctCap	2	R	1h	N/A (Hard-coded)
	Presence detection support: 1 = yes, 0 = no.			
TrigRqd	1	R	0h	N/A (Hard-coded)
	Trigger required for impedance sense: 1 = yes, 0 = no.			
ImpSenseCap	0	R	0h	N/A (Hard-coded)
	Impedance sense support: 1 = yes, 0 = no.			

6.10.2. PortE (NID = 0Eh): ConLst (Available only on 48-pin versions)

Reg	Byte 4 (Bits 31:24)	Byte 3 (Bits 23:16)	Byte 2 (Bits 15:8)	Byte 1 (Bits 7:0)
Set				
Get	F000Eh			

Field Name	Bits	R/W	Default	Reset
Rsvd	31:8	R	000000h	N/A (Hard-coded)
	Reserved.			
LForm	7	R	0h	N/A (Hard-coded)
	Connection list format: 1 = long-form (15-bit) NID entries, 0 = short-form (7-bit) NID entries.			
ConL	6:0	R	04h	N/A (Hard-coded)
	Number of NID entries in connection list.			

©2014 TEMPO SEMICONDCUTOR, INC..

6.10.3. PortE (NID = 0Eh): ConLstEntry0 (Available only on 48-pin versions)

Reg	Byte 4 (Bits 31:24)	Byte 3 (Bits 23:16)	Byte 2 (Bits 15:8)	Byte 1 (Bits 7:0)
Set				
Get	F0200h			

Field Name	Bits	R/W	Default	Reset
ConL3	31:24	R	23h	N/A (Hard-coded)
	DAC2 Converter widget (0x23) on 92HD66C. 92HD66B this is reserved.			
ConL2	23:16	R	1Ch	N/A (Hard-coded)
	MixerOutVol Selector widget (0x1C)			
ConL1	15:8	R	14h	N/A (Hard-coded)
	DAC1 Converter widget (0x14)			
ConL0	7:0	R	13h	N/A (Hard-coded)
	DAC0 Converter widget (0x13)			

6.10.4. PortE (NID = 0Eh): InAmpLeft (Available only on 48-pin versions)

Reg	Byte 4 (Bits 31:24)	Byte 3 (Bits 23:16)	Byte 2 (Bits 15:8)	Byte 1 (Bits 7:0)
Set				360h
Get	B2000h			

Field Name	Bits	R/W	Default	Reset
Rsvd1	31:2	R	00000000h	N/A (Hard-coded)
	Reserved.			
Gain	1:0	RW	0h	POR - DAFG - ULR
	Amp gain step number (see InAmpCap parameter pertaining to this widget).			

6.10.5. PortE (NID = 0Eh): InAmpRight (Available only on 48-pin versions)

Reg	Byte 4 (Bits 31:24)	Byte 3 (Bits 23:16)	Byte 2 (Bits 15:8)	Byte 1 (Bits 7:0)
Set				350h

©2014 TEMPO SEMICONDCUTOR, INC..

6.10.5. *PortE (NID = 0Eh): InAmpRight* (Available only on 48-pin versions)

Reg	Byte 4 (Bits 31:24)	Byte 3 (Bits 23:16)	Byte 2 (Bits 15:8)	Byte 1 (Bits 7:0)
Get	B0000h			

Field Name	Bits	R/W	Default	Reset
Rsvd1	31:2	R	00000000h	N/A (Hard-coded)
	Reserved.			
Gain	1:0	RW	0h	POR - DAFG - ULR
	Amp gain step number (see InAmpCap parameter pertaining to this widget).			

6.10.6. *PortE (NID = 0Eh): ConSelectCtrl* (Available only on 48-pin versions)

Reg	Byte 4 (Bits 31:24)	Byte 3 (Bits 23:16)	Byte 2 (Bits 15:8)	Byte 1 (Bits 7:0)
Set				701h
Get	F0100h			

Field Name	Bits	R/W	Default	Reset
Rsvd	31:2	R	00000000h	N/A (Hard-coded)
	Reserved.			
Index	1:0	RW	0h	POR - DAFG - ULR
	Connection select control index.			

6.10.7. *PortE (NID = 0Eh): PwrState* (Available only on 48-pin versions)

Reg	Byte 4 (Bits 31:24)	Byte 3 (Bits 23:16)	Byte 2 (Bits 15:8)	Byte 1 (Bits 7:0)
Set				705h
Get	F0500h			

Field Name	Bits	R/W	Default	Reset
Rsvd4	31:11	R	000000h	N/A (Hard-coded)
	Reserved.			

©2014 TEMPO SEMICONDCUTOR, INC..

Field Name	Bits	R/W	Default	Reset
SettingsReset	10	R	1h	POR - DAFG - ULR
	Indicates if any persistent settings in this Widget have been reset. Cleared by PwrState 'Get', or a 'Set' to any Verb in this Widget.			
Rsvd3	9	R	0h	N/A (Hard-coded)
	Reserved.			
Error	8	R	0h	POR - DAFG - ULR
	Error indicator: 1 = cannot enter requested power state, 0 = no problem with requested power state.			
Rsvd2	7:6	R	0h	N/A (Hard-coded)
	Reserved.			
Act	5:4	R	3h	POR - DAFG - LR
	Actual power state of this widget.			
Rsvd1	3:2	R	0h	N/A (Hard-coded)
	Reserved.			
Set	1:0	RW	0h	POR - DAFG - LR
	Current power state setting for this widget.			

6.10.8. PortE (NID = 0Eh): PinWCntrl (Available only on 48-pin versions)

Reg	Byte 4 (Bits 31:24)	Byte 3 (Bits 23:16)	Byte 2 (Bits 15:8)	Byte 1 (Bits 7:0)
Set				707h
Get	F0700h			

Field Name	Bits	R/W	Default	Reset
Rsvd2	31:7	R	000000h	N/A (Hard-coded)
	Reserved.			
OutEn	6	RW	0h	POR - DAFG - ULR
	Output enable: 1 = enabled, 0 = disabled.			
InEn	5	RW	0h	N/A (Hard-coded)
	Input enable: 1 = enabled, 0 = disabled.			

©2014 TEMPO SEMICONDCUTOR, INC..

Field Name	Bits	R/W	Default	Reset
Rsvd1	4:3	R	0h	N/A (Hard-coded)
	Reserved.			
VRefEn	2:0	RW	0h	POR - DAFG - ULR
	Vref selection (See VrefCntrl field of PinCap parameter for supported selections): 000b= HI-Z 001b= 50% 010b= GND 011b= Reserved 100b= 80% 101b= 100% 110b= Reserved 111b= Reserved.			

6.10.9. PortE (NID = 0Eh): UnsolResp (Available only on 48-pin versions)

Reg	Byte 4 (Bits 31:24)	Byte 3 (Bits 23:16)	Byte 2 (Bits 15:8)	Byte 1 (Bits 7:0)
Set				708h
Get	F0800h			

Field Name	Bits	R/W	Default	Reset
Rsvd2	31:8	R	000000h	N/A (Hard-coded)
	Reserved.			
En	7	RW	0h	POR - DAFG - ULR
	Unsolicited response enable (also enables Wake events for this Widget): 1 = enabled, 0 = disabled.			
Rsvd1	6	R	0h	N/A (Hard-coded)
	Reserved.			
Tag	5:0	RW	00h	POR - DAFG - ULR
	Software programmable field returned in top six bits (31:26) of every Unsolicited Response generated by this node.			

6.10.10. PortE (NID = 0Eh): ChSense (Available only on 48-pin versions)

Reg	Byte 4 (Bits 31:24)	Byte 3 (Bits 23:16)	Byte 2 (Bits 15:8)	Byte 1 (Bits 7:0)
Set				709h

©2014 TEMPO SEMICONDCUTOR, INC..

6.10.10. PortE (NID = 0Eh): ChSense (Available only on 48-pin versions)

Reg	Byte 4 (Bits 31:24)	Byte 3 (Bits 23:16)	Byte 2 (Bits 15:8)	Byte 1 (Bits 7:0)
Get	F0900h			

Field Name	Bits	R/W	Default	Reset
PresDtct	31	R	0h	POR
	Presence detection indicator: 1 = presence detected; 0 = presence not detected.			
Rsvd	30:0	R	00000000h	N/A (Hard-coded)
	Reserved.			

6.10.11. PortE (NID = 0Eh): EAPDBTLLR (Available only on 48-pin versions)

Reg	Byte 4 (Bits 31:24)	Byte 3 (Bits 23:16)	Byte 2 (Bits 15:8)	Byte 1 (Bits 7:0)
Set				70Ch
Get	F0C00h			

Field Name	Bits	R/W	Default	Reset
Rsvd2	31:2	R	00000000h	N/A (Hard-coded)
	Reserved.			
EAPD	1	RW	1h	POR - DAFG - ULR
	EAPD control: 1 = set EAPD pin to 1 (powered) up if this pin is powered up, 0 = set EAPD pin to 0.			
Rsvd1	0	R	0h	N/A (Hard-coded)
	Reserved.			

6.10.12. PortE (NID = 0Eh): ConfigDefault (Available only on 48-pin versions)

Reg	Byte 4 (Bits 31:24)	Byte 3 (Bits 23:16)	Byte 2 (Bits 15:8)	Byte 1 (Bits 7:0)
Set	71Fh	71Eh	71Dh	71Ch
Get	F1F00h / F1E00h / F1D00h / F1C00h			

©2014 TEMPO SEMICONDCUTOR, INC..

Field Name	Bits	R/W	Default	Reset
PortConnectivity	31:30	RW	0h	POR
	Port connectivity: 0h = Port complex is connected to a jack 1h = No physical connection for port 2h = Fixed function device is attached 3h = Both jack and internal device attached (info in all other fields refers to integrated device, any presence detection refers to jack)			
Location	29:24	RW	01h	POR
	Location Bits [5..4]: 0h = External on primary chassis 1h = Internal 2h = Separate chassis 3h = Other Bits [3..0]: 0h = N/A 1h = Rear 2h = Front 3h = Left 4h = Right 5h = Top 6h = Bottom 7h-9h = Special Ah-Fh = Reserved			
Device	23:20	RW	Ah	POR
	Default device: 0h = Line out 1h = Speaker 2h = HP out 3h = CD 4h = SPDIF Out 5h = Digital other out 6h = Modem line side 7h = Modem handset side 8h = Line in 9h = Aux Ah = Mic in Bh = Telephony Ch = SPDIF In Dh = Digital other in Eh = Reserved Fh = Other			

©2014 TEMPO SEMICONDCUTOR, INC..

Field Name	Bits	R/W	Default	Reset
ConnectionType	19:16	RW	1h	POR
	Connection type: 0h = Unknown 1h = 1/8" stereo/mono 2h = 1/4" stereo/mono 3h = ATAPI internal 4h = RCA 5h = Optical 6h = Other digital 7h = Other analog 8h = Multichannel analog (DIN) 9h = XLR/Professional Ah = RJ-11 (modem) Bh = Combination Ch-Eh = Reserved Fh = Other			
Color	15:12	RW	9h	POR
	Color: 0h = Unknown 1h = Black 2h = Grey 3h = Blue 4h = Green 5h = Red 6h = Orange 7h = Yellow 8h = Purple 9h = Pink Ah-Dh = Reserved Eh = White Fh = Other			
Misc	11:8	RW	0h	POR
	Miscellaneous: Bits [3..1] = Reserved Bit 0 = Jack detect override			
Association	7:4	RW	4h	POR
	Default association.			
Sequence	3:0	RW	0h	POR
	Sequence.			

©2014 TEMPO SEMICONDCUTOR, INC..

6.11. PortF (NID = 0Fh): WCap

Reg	Byte 4 (Bits 31:24)	Byte 3 (Bits 23:16)	Byte 2 (Bits 15:8)	Byte 1 (Bits 7:0)
Set				
Get	F0009h			

Field Name	Bits	R/W	Default	Reset
Rsvd2	31:24	R	00h	N/A (Hard-coded)
	Reserved.			
Type	23:20	R	4h	N/A (Hard-coded)
	Widget type: 0h = Out Converter 1h = In Converter 2h = Summing (Mixer) 3h = Selector (Mux) 4h = Pin Complex 5h = Power 6h = Volume Knob 7h = Beep Generator 8h-Eh = Reserved Fh = Vendor Defined			
Delay	19:16	R	0h	N/A (Hard-coded)
	Number of sample delays through widget.			
Rsvd1	15:12	R	0h	N/A (Hard-coded)
	Reserved.			
SwapCap	11	R	0h	N/A (Hard-coded)
	Left/right swap support: 1 = yes, 0 = no.			
PwrCntrl	10	R	1h	N/A (Hard-coded)
	Power state support: 1 = yes, 0 = no.			
Dig	9	R	0h	N/A (Hard-coded)
	Digital stream support: 1 = yes (digital), 0 = no (analog).			
ConnList	8	R	1h	N/A (Hard-coded)
	Connection list present: 1 = yes, 0 = no.			
UnSolCap	7	R	1h	N/A (Hard-coded)
	Unsolicited response support: 1 = yes, 0 = no.			

©2014 TEMPO SEMICONDCUTOR, INC..

Field Name	Bits	R/W	Default	Reset
ProcWidget	6	R	0h	N/A (Hard-coded)
	Processing state support: 1 = yes, 0 = no.			
Stripe	5	R	0h	N/A (Hard-coded)
	Striping support: 1 = yes, 0 = no.			
FormatOvrd	4	R	0h	N/A (Hard-coded)
	Stream format override: 1 = yes, 0 = no.			
AmpParOvrd	3	R	0h	N/A (Hard-coded)
	Amplifier capabilities override: 1 = yes, no.			
OutAmpPrsnt	2	R	0h	N/A (Hard-coded)
	Output amp present: 1 = yes, 0 = no.			
InAmpPrsnt	1	R	1h	N/A (Hard-coded)
	Input amp present: 1 = yes, 0 = no.			
Stereo	0	R	1h	N/A (Hard-coded)
	Stereo stream support: 1 = yes (stereo), 0 = no (mono).			

6.11.1. PortF (NID = 0Fh): PinCap

Reg	Byte 4 (Bits 31:24)	Byte 3 (Bits 23:16)	Byte 2 (Bits 15:8)	Byte 1 (Bits 7:0)
Set				
Get	F000Ch			

Field Name	Bits	R/W	Default	Reset
Rsvd2	31:17	R	0000h	N/A (Hard-coded)
	Reserved.			
EapdCap	16	R	1h	N/A (Hard-coded)
	EAPD support: 1 = yes, 0 = no.			

©2014 TEMPO SEMICONDCUTOR, INC..

Field Name	Bits	R/W	Default	Reset
VrefCntrl	15:8	R	00h	N/A (Hard-coded)
	Vref support: bit 7 = Reserved bit 6 = Reserved bit 5 = 100% support (1 = yes, 0 = no) bit 4 = 80% support (1 = yes, 0 = no) bit 3 = Reserved bit 2 = GND support (1 = yes, 0 = no) bit 1 = 50% support (1 = yes, 0 = no) bit 0 = Hi-Z support (1 = yes, 0 = no)			
Rsvd1	7	R	0h	N/A (Hard-coded)
	Reserved.			
BalancedIO	6	R	0h	N/A (Hard-coded)
	Balanced I/O support: 1 = yes, 0 = no.			
InCap	5	R	1h	N/A (Hard-coded)
	Input support: 1 = yes, 0 = no.			
OutCap	4	R	1h	N/A (Hard-coded)
	Output support: 1 = yes, 0 = no.			
HdphDrvCap	3	R	1h	N/A (Hard-coded)
	Headphone amp present: 1 = yes, 0 = no.			
PresDtctCap	2	R	1h	N/A (Hard-coded)
	Presence detection support: 1 = yes, 0 = no.			
TrigRqd	1	R	0h	N/A (Hard-coded)
	Trigger required for impedance sense: 1 = yes, 0 = no.			
ImpSenseCap	0	R	0h	N/A (Hard-coded)
	Impedance sense support: 1 = yes, 0 = no.			

6.11.2. PortF (NID = 0Fh): ConLst

Reg	Byte 4 (Bits 31:24)	Byte 3 (Bits 23:16)	Byte 2 (Bits 15:8)	Byte 1 (Bits 7:0)
Set				
Get	F000Eh			

©2014 TEMPO SEMICONDCUTOR, INC..

Field Name	Bits	R/W	Default	Reset
Rsvd	31:8	R	000000h	N/A (Hard-coded)
	Reserved.			
LForm	7	R	0h	N/A (Hard-coded)
	Connection list format: 1 = long-form (15-bit) NID entries, 0 = short-form (7-bit) NID entries.			
ConL	6:0	R	04h	N/A (Hard-coded)
	Number of NID entries in connection list.			

6.11.3. PortF (NID = 0Fh): ConLstEntry0

Reg	Byte 4 (Bits 31:24)	Byte 3 (Bits 23:16)	Byte 2 (Bits 15:8)	Byte 1 (Bits 7:0)
Set				
Get	F0200h			

Field Name	Bits	R/W	Default	Reset
ConL3	31:24	R	23h	N/A (Hard-coded)
	DAC2 Converter widget (0x23) on 92HD66C. 92HD66B this is reserved.			
ConL2	23:16	R	1Ch	N/A (Hard-coded)
	MixerOutVol Selector widget (0x1C)			
ConL1	15:8	R	14h	N/A (Hard-coded)
	DAC1 Converter widget (0x14)			
ConL0	7:0	R	13h	N/A (Hard-coded)
	DAC0 Converter widget (0x13)			

6.11.4. PortF (NID = 0Fh): InAmpLeft

Reg	Byte 4 (Bits 31:24)	Byte 3 (Bits 23:16)	Byte 2 (Bits 15:8)	Byte 1 (Bits 7:0)
Set				360h
Get	B2000h			

©2014 TEMPO SEMICONDCUTOR, INC..

Field Name	Bits	R/W	Default	Reset
Rsvd1	31:2	R	00000000h	N/A (Hard-coded)
	Reserved.			
Gain	1:0	RW	0h	POR - DAFG - ULR
	Amp gain step number (see InAmpCap parameter pertaining to this widget).			

6.11.5. PortF (NID = 0Fh): InAmpRight

Reg	Byte 4 (Bits 31:24)	Byte 3 (Bits 23:16)	Byte 2 (Bits 15:8)	Byte 1 (Bits 7:0)
Set				350h
Get	B0000h			

Field Name	Bits	R/W	Default	Reset
Rsvd1	31:2	R	00000000h	N/A (Hard-coded)
	Reserved.			
Gain	1:0	RW	0h	POR - DAFG - ULR
	Amp gain step number (see InAmpCap parameter pertaining to this widget).			

6.11.6. PortF (NID = 0Fh): ConSelectCtrl

Reg	Byte 4 (Bits 31:24)	Byte 3 (Bits 23:16)	Byte 2 (Bits 15:8)	Byte 1 (Bits 7:0)
Set				701h
Get	F0100h			

Field Name	Bits	R/W	Default	Reset
Rsvd	31:2	R	00000000h	N/A (Hard-coded)
	Reserved.			
Index	1:0	RW	0h	POR - DAFG - ULR
	Connection select control index.			

©2014 TEMPO SEMICONDCUTOR, INC..

6.11.7. PortF (NID = 0Fh): PwrState

Reg	Byte 4 (Bits 31:24)	Byte 3 (Bits 23:16)	Byte 2 (Bits 15:8)	Byte 1 (Bits 7:0)
Set				705h
Get	F0500h			

Field Name	Bits	R/W	Default	Reset
Rsvd4	31:11	R	000000h	N/A (Hard-coded)
	Reserved.			
SettingsReset	10	R	1h	POR - DAFG - ULR
	Indicates if any persistent settings in this Widget have been reset. Cleared by PwrState 'Get', or a 'Set' to any Verb in this Widget.			
Rsvd3	9	R	0h	N/A (Hard-coded)
	Reserved.			
Error	8	R	0h	POR - DAFG - ULR
	Error indicator: 1 = cannot enter requested power state, 0 = no problem with requested power state.			
Rsvd2	7:6	R	0h	N/A (Hard-coded)
	Reserved.			
Act	5:4	R	3h	POR - DAFG - LR
	Actual power state of this widget.			
Rsvd1	3:2	R	0h	N/A (Hard-coded)
	Reserved.			
Set	1:0	RW	0h	POR - DAFG - LR
	Current power state setting for this widget.			

6.11.8. PortF (NID = 0Fh): PinWCntrl

Reg	Byte 4 (Bits 31:24)	Byte 3 (Bits 23:16)	Byte 2 (Bits 15:8)	Byte 1 (Bits 7:0)
Set				707h
Get	F0700h			

©2014 TEMPO SEMICONDCUTOR, INC..

Field Name	Bits	R/W	Default	Reset
Rsvd2	31:8	R	000000h	N/A (Hard-coded)
	Reserved.			
HPhnEn	7	RW	0h	POR - DAFG - ULR
	Headphone amp enable: 1 = enabled, 0 = disabled.			
OutEn	6	RW	0h	POR - DAFG - ULR
	Output enable: 1 = enabled, 0 = disabled.			
InEn	5	RW	0h	POR - DAFG - ULR
	Input enable: 1 = enabled, 0 = disabled.			
Rsvd1	4:0	R	0h	N/A (Hard-coded)
	Reserved.			

6.11.9. PortF (NID = 0Fh): UnsolResp

Reg	Byte 4 (Bits 31:24)	Byte 3 (Bits 23:16)	Byte 2 (Bits 15:8)	Byte 1 (Bits 7:0)
Set				708h
Get	F0800h			

Field Name	Bits	R/W	Default	Reset
Rsvd2	31:8	R	000000h	N/A (Hard-coded)
	Reserved.			
En	7	RW	0h	POR - DAFG - ULR
	Unsolicited response enable (also enables Wake events for this Widget): 1 = enabled, 0 = disabled.			
Rsvd1	6	R	0h	N/A (Hard-coded)
	Reserved.			
Tag	5:0	RW	00h	POR - DAFG - ULR
	Software programmable field returned in top six bits (31:26) of every Unsolicited Response generated by this node.			

©2014 TEMPO SEMICONDCUTOR, INC..

6.11.10. PortF (NID = 0Fh): ChSense

Reg	Byte 4 (Bits 31:24)	Byte 3 (Bits 23:16)	Byte 2 (Bits 15:8)	Byte 1 (Bits 7:0)
Set				709h
Get	F0900h			

Field Name	Bits	R/W	Default	Reset
PresDtct	31	R	0h	POR
	Presence detection indicator: 1 = presence detected; 0 = presence not detected.			
Rsvd	30:0	R	00000000h	N/A (Hard-coded)
	Reserved.			

6.11.11. PortF (NID = 0Fh): EAPDBTLLR

Reg	Byte 4 (Bits 31:24)	Byte 3 (Bits 23:16)	Byte 2 (Bits 15:8)	Byte 1 (Bits 7:0)
Set				70Ch
Get	F0C00h			

Field Name	Bits	R/W	Default	Reset
Rsvd2	31:2	R	00000000h	N/A (Hard-coded)
	Reserved.			
EAPD	1	RW	1h	POR - DAFG - ULR
	EAPD control: 1 = set EAPD pin to 1 (powered) up if this pin is powered up, 0 = set EAPD pin to 0.			
Rsvd1	0	R	0h	N/A (Hard-coded)
	Reserved.			

6.11.12. PortF (NID = 0Fh): ConfigDefault

Reg	Byte 4 (Bits 31:24)	Byte 3 (Bits 23:16)	Byte 2 (Bits 15:8)	Byte 1 (Bits 7:0)
Set	71Fh	71Eh	71Dh	71Ch
Get	F1F00h / F1E00h / F1D00h / F1C00h			

©2014 TEMPO SEMICONDCUTOR, INC..

Field Name	Bits	R/W	Default	Reset
PortConnectivity	31:30	RW	0h	POR
	Port connectivity: 0h = Port complex is connected to a jack 1h = No physical connection for port 2h = Fixed function device is attached 3h = Both jack and internal device attached (info in all other fields refers to integrated device, any presence detection refers to jack)			
Location	29:24	RW	01h	POR
	Location Bits [5..4]: 0h = External on primary chassis 1h = Internal 2h = Separate chassis 3h = Other Bits [3..0]: 0h = N/A 1h = Rear 2h = Front 3h = Left 4h = Right 5h = Top 6h = Bottom 7h-9h = Special Ah-Fh = Reserved			
Device	23:20	RW	0h	POR
	Default device: 0h = Line out 1h = Speaker 2h = HP out 3h = CD 4h = SPDIF Out 5h = Digital other out 6h = Modem line side 7h = Modem handset side 8h = Line in 9h = Aux Ah = Mic in Bh = Telephony Ch = SPDIF In Dh = Digital other in Eh = Reserved Fh = Other			

©2014 TEMPO SEMICONDCUTOR, INC..

Field Name	Bits	R/W	Default	Reset
ConnectionType	19:16	RW	1h	POR
	Connection type: 0h = Unknown 1h = 1/8" stereo/mono 2h = 1/4" stereo/mono 3h = ATAPI internal 4h = RCA 5h = Optical 6h = Other digital 7h = Other analog 8h = Multichannel analog (DIN) 9h = XLR/Professional Ah = RJ-11 (modem) Bh = Combination Ch-Eh = Reserved Fh = Other			
Color	15:12	RW	4h	POR
	Color: 0h = Unknown 1h = Black 2h = Grey 3h = Blue 4h = Green 5h = Red 6h = Orange 7h = Yellow 8h = Purple 9h = Pink Ah-Dh = Reserved Eh = White Fh = Other			
Misc	11:8	RW	0h	POR
	Miscellaneous: Bits [3..1] = Reserved Bit 0 = Jack detect override			
Association	7:4	RW	3h	POR
	Default association.			
Sequence	3:0	RW	0h	POR
	Sequence.			

©2014 TEMPO SEMICONDCUTOR, INC..

6.12. MonoOut (NID = 10h): WCap (Available only on 48-pin versions)

Reg	Byte 4 (Bits 31:24)	Byte 3 (Bits 23:16)	Byte 2 (Bits 15:8)	Byte 1 (Bits 7:0)
Set				
Get	F0009h			

Field Name	Bits	R/W	Default	Reset
Rsvd2	31:24	R	00h	N/A (Hard-coded)
	Reserved.			
Type	23:20	R	4h	N/A (Hard-coded)
	Widget type: 0h = Out Converter 1h = In Converter 2h = Summing (Mixer) 3h = Selector (Mux) 4h = Pin Complex 5h = Power 6h = Volume Knob 7h = Beep Generator 8h-Eh = Reserved Fh = Vendor Defined			
Delay	19:16	R	0h	N/A (Hard-coded)
	Number of sample delays through widget.			
Rsvd1	15:12	R	0h	N/A (Hard-coded)
	Reserved.			
SwapCap	11	R	0h	N/A (Hard-coded)
	Left/right swap support: 1 = yes, 0 = no.			
PwrCntrl	10	R	1h	N/A (Hard-coded)
	Power state support: 1 = yes, 0 = no.			
Dig	9	R	0h	N/A (Hard-coded)
	Digital stream support: 1 = yes (digital), 0 = no (analog).			
ConnList	8	R	1h	N/A (Hard-coded)
	Connection list present: 1 = yes, 0 = no.			
UnSolCap	7	R	1h	N/A (Hard-coded)
	Unsolicited response support: 1 = yes, 0 = no.			

©2014 TEMPO SEMICONDCUTOR, INC..

Field Name	Bits	R/W	Default	Reset
ProcWidget	6	R	0h	N/A (Hard-coded)
	Processing state support: 1 = yes, 0 = no.			
Stripe	5	R	0h	N/A (Hard-coded)
	Striping support: 1 = yes, 0 = no.			
FormatOvrd	4	R	0h	N/A (Hard-coded)
	Stream format override: 1 = yes, 0 = no.			
AmpParOvrd	3	R	0h	N/A (Hard-coded)
	Amplifier capabilities override: 1 = yes, no.			
OutAmpPrsnt	2	R	0h	N/A (Hard-coded)
	Output amp present: 1 = yes, 0 = no.			
InAmpPrsnt	1	R	0h	N/A (Hard-coded)
	Input amp present: 1 = yes, 0 = no.			
Stereo	0	R	0h	N/A (Hard-coded)
	Stereo stream support: 1 = yes (stereo), 0 = no (mono).			

6.12.1. MonoOut (NID = 10h): PinCap (Available only on 48-pin versions)

Reg	Byte 4 (Bits 31:24)	Byte 3 (Bits 23:16)	Byte 2 (Bits 15:8)	Byte 1 (Bits 7:0)
Set				
Get	F000Ch			

Field Name	Bits	R/W	Default	Reset
Rsvd2	31:17	R	0000h	N/A (Hard-coded)
	Reserved.			
EapdCap	16	R	0h	N/A (Hard-coded)
	EAPD support: 1 = yes, 0 = no.			

©2014 TEMPO SEMICONDCUTOR, INC..

Field Name	Bits	R/W	Default	Reset
VrefCntrl	15:8	R	00h	N/A (Hard-coded)
	Vref support: bit 7 = Reserved bit 6 = Reserved bit 5 = 100% support (1 = yes, 0 = no) bit 4 = 80% support (1 = yes, 0 = no) bit 3 = Reserved bit 2 = GND support (1 = yes, 0 = no) bit 1 = 50% support (1 = yes, 0 = no) bit 0 = Hi-Z support (1 = yes, 0 = no)			
Rsvd1	7	R	0h	N/A (Hard-coded)
	Reserved.			
BalancedIO	6	R	0h	N/A (Hard-coded)
	Balanced I/O support: 1 = yes, 0 = no.			
InCap	5	R	0h	N/A (Hard-coded)
	Input support: 1 = yes, 0 = no.			
OutCap	4	R	1h	N/A (Hard-coded)
	Output support: 1 = yes, 0 = no.			
HdphDrvCap	3	R	0h	N/A (Hard-coded)
	Headphone amp present: 1 = yes, 0 = no.			
PresDtctCap	2	R	1h	N/A (Hard-coded)
	Presence detection support: 1 = yes, 0 = no.			
TrigRqd	1	R	0h	N/A (Hard-coded)
	Trigger required for impedance sense: 1 = yes, 0 = no.			
ImpSenseCap	0	R	0h	N/A (Hard-coded)
	Impedance sense support: 1 = yes, 0 = no.			

6.12.2. MonoOut (NID = 10h): ConLst (Available only on 48-pin versions)

Reg	Byte 4 (Bits 31:24)	Byte 3 (Bits 23:16)	Byte 2 (Bits 15:8)	Byte 1 (Bits 7:0)
Set				
Get	F000Eh			

©2014 TEMPO SEMICONDCUTOR, INC..

Field Name	Bits	R/W	Default	Reset
Rsvd	31:8	R	000000h	N/A (Hard-coded)
	Reserved.			
LForm	7	R	0h	N/A (Hard-coded)
	Connection list format: 1 = long-form (15-bit) NID entries, 0 = short-form (7-bit) NID entries.			
ConL	6:0	R	01h	N/A (Hard-coded)
	Number of NID entries in connection list.			

6.12.3. MonoOut (NID = 10h): ConLstEntry0 (Available only on 48-pin versions)

Reg	Byte 4 (Bits 31:24)	Byte 3 (Bits 23:16)	Byte 2 (Bits 15:8)	Byte 1 (Bits 7:0)
Set				
Get	F0200h			

Field Name	Bits	R/W	Default	Reset
ConL3	31:24	R	00h	N/A (Hard-coded)
	Unused list entry.			
ConL2	23:16	R	00h	N/A (Hard-coded)
	Unused list entry.			
ConL1	15:8	R	00h	N/A (Hard-coded)
	Unused list entry.			
ConL0	7:0	R	1Ah	N/A (Hard-coded)
	MonoMix Summing widget (0x1A)			

6.12.4. MonoOut (NID = 10h): PwrState (Available only on 48-pin versions)

Reg	Byte 4 (Bits 31:24)	Byte 3 (Bits 23:16)	Byte 2 (Bits 15:8)	Byte 1 (Bits 7:0)
Set				705h
Get	F0500h			

©2014 TEMPO SEMICONDCUTOR, INC..

Field Name	Bits	R/W	Default	Reset
Rsvd4	31:11	R	000000h	N/A (Hard-coded)
	Reserved.			
SettingsReset	10	R	1h	POR - DAFG - ULR
	Indicates if any persistent settings in this Widget have been reset. Cleared by PwrState 'Get', or a 'Set' to any Verb in this Widget.			
Rsvd3	9	R	0h	N/A (Hard-coded)
	Reserved.			
Error	8	R	0h	POR - DAFG - ULR
	Error indicator: 1 = cannot enter requested power state, 0 = no problem with requested power state.			
Rsvd2	7:6	R	0h	N/A (Hard-coded)
	Reserved.			
Act	5:4	R	3h	POR - DAFG - LR
	Actual power state of this widget.			
Rsvd1	3:2	R	0h	N/A (Hard-coded)
	Reserved.			
Set	1:0	RW	0h	POR - DAFG - LR
	Current power state setting for this widget.			

6.12.5. MonoOut (NID = 10h): PinWCntrl (Available only on 48-pin versions)

Reg	Byte 4 (Bits 31:24)	Byte 3 (Bits 23:16)	Byte 2 (Bits 15:8)	Byte 1 (Bits 7:0)
Set				707h
Get	F0700h			

Field Name	Bits	R/W	Default	Reset
Rsvd2	31:7	R	000000h	N/A (Hard-coded)
	Reserved.			
OutEn	6	RW	0h	POR - DAFG - ULR
	Output enable: 1 = enabled, 0 = disabled.			

©2014 TEMPO SEMICONDCUTOR, INC..

Field Name	Bits	R/W	Default	Reset
Rsvd1	5:0	R	0h	N/A (Hard-coded)
	Reserved.			

6.12.6. *MonoOut (NID = 10h): UnsolResp* (Available only on 48-pin versions)

Reg	Byte 4 (Bits 31:24)	Byte 3 (Bits 23:16)	Byte 2 (Bits 15:8)	Byte 1 (Bits 7:0)
Set				708h
Get	F0800h			

Field Name	Bits	R/W	Default	Reset
Rsvd2	31:8	R	000000h	N/A (Hard-coded)
	Reserved.			
En	7	RW	0h	POR - DAFG - ULR
	Unsolicited response enable (also enables Wake events for this Widget): 1 = enabled, 0 = disabled.			
Rsvd1	6	R	0h	N/A (Hard-coded)
	Reserved.			
Tag	5:0	RW	00h	POR - DAFG - ULR
	Software programmable field returned in top six bits (31:26) of every Unsolicited Response generated by this node.			

6.12.7. *MonoOut (NID = 10h): ChSense* (Available only on 48-pin versions)

Reg	Byte 4 (Bits 31:24)	Byte 3 (Bits 23:16)	Byte 2 (Bits 15:8)	Byte 1 (Bits 7:0)
Set				709h
Get	F0900h			

Field Name	Bits	R/W	Default	Reset
PresDtct	31	R	0h	POR
	Presence detection indicator: 1 = presence detected; 0 = presence not detected.			
Rsvd	30:0	R	00000000h	N/A (Hard-coded)
	Reserved.			

©2014 TEMPO SEMICONDCUTOR, INC..

6.12.8. MonoOut (NID = 10h): ConfigDefault (Available only on 48-pin versions)

Reg	Byte 4 (Bits 31:24)	Byte 3 (Bits 23:16)	Byte 2 (Bits 15:8)	Byte 1 (Bits 7:0)
Set	71Fh	71Eh	71Dh	71Ch
Get	F1F00h / F1E00h / F1D00h / F1C00h			

Field Name	Bits	R/W	Default	Reset
PortConnectivity	31:30	RW	1h	POR
	Port connectivity: 0h = Port complex is connected to a jack 1h = No physical connection for port 2h = Fixed function device is attached 3h = Both jack and internal device attached (info in all other fields refers to integrated device, any presence detection refers to jack)			
Location	29:24	RW	00h	POR
	Location Bits [5..4]: 0h = External on primary chassis 1h = Internal 2h = Separate chassis 3h = Other Bits [3..0]: 0h = N/A 1h = Rear 2h = Front 3h = Left 4h = Right 5h = Top 6h = Bottom 7h-9h = Special Ah-Fh = Reserved			

©2014 TEMPO SEMICONDCUTOR, INC..

Field Name	Bits	R/W	Default	Reset
Device	23:20	RW	Fh	POR
	Default device: 0h = Line out 1h = Speaker 2h = HP out 3h = CD 4h = SPDIF Out 5h = Digital other out 6h = Modem line side 7h = Modem handset side 8h = Line in 9h = Aux Ah = Mic in Bh = Telephony Ch = SPDIF In Dh = Digital other in Eh = Reserved Fh = Other			
ConnectionType	19:16	RW	0h	POR
	Connection type: 0h = Unknown 1h = 1/8" stereo/mono 2h = 1/4" stereo/mono 3h = ATAPI internal 4h = RCA 5h = Optical 6h = Other digital 7h = Other analog 8h = Multichannel analog (DIN) 9h = XLR/Professional Ah = RJ-11 (modem) Bh = Combination Ch-Eh = Reserved Fh = Other			

©2014 TEMPO SEMICONDCUTOR, INC..

Field Name	Bits	R/W	Default	Reset
Color	15:12	RW	0h	POR
	Color: 0h = Unknown 1h = Black 2h = Grey 3h = Blue 4h = Green 5h = Red 6h = Orange 7h = Yellow 8h = Purple 9h = Pink Ah-Dh = Reserved Eh = White Fh = Other			
Misc	11:8	RW	0h	POR
	Miscellaneous: Bits [3..1] = Reserved Bit 0 = Jack detect override			
Association	7:4	RW	Fh	POR
	Default assocation.			
Sequence	3:0	RW	0h	POR
	Sequence.			

6.13. DMic0 (NID = 11h): WCap

Reg	Byte 4 (Bits 31:24)	Byte 3 (Bits 23:16)	Byte 2 (Bits 15:8)	Byte 1 (Bits 7:0)
Set				
Get	F0009h			

Field Name	Bits	R/W	Default	Reset
Rsvd2	31:24	R	00h	N/A (Hard-coded)
	Reserved.			

©2014 TEMPO SEMICONDCUTOR, INC..

Field Name	Bits	R/W	Default	Reset
Type	23:20	R	4h	N/A (Hard-coded)
	Widget type: 0h = Out Converter 1h = In Converter 2h = Summing (Mixer) 3h = Selector (Mux) 4h = Pin Complex 5h = Power 6h = Volume Knob 7h = Beep Generator 8h-Eh = Reserved Fh = Vendor Defined			
Delay	19:16	R	0h	N/A (Hard-coded)
	Number of sample delays through widget.			
Rsvd1	15:12	R	0h	N/A (Hard-coded)
	Reserved.			
SwapCap	11	R	0h	N/A (Hard-coded)
	Left/right swap support: 1 = yes, 0 = no.			
PwrCntrl	10	R	1h	N/A (Hard-coded)
	Power state support: 1 = yes, 0 = no.			
DigitalStrm	9	R	0h	N/A (Hard-coded)
	Digital stream support: 1 = yes (digital), 0 = no (analog).			
ConnList	8	R	0h	N/A (Hard-coded)
	Connection list present: 1 = yes, 0 = no.			
UnsolCap	7	R	0h	N/A (Hard-coded)
	Unsolicited response support: 1 = yes, 0 = no.			
ProcWidget	6	R	0h	N/A (Hard-coded)
	Processing state support: 1 = yes, 0 = no.			
Stripe	5	R	0h	N/A (Hard-coded)
	Striping support: 1 = yes, 0 = no.			
FormatOvrd	4	R	0h	N/A (Hard-coded)
	Stream format override: 1 = yes, 0 = no.			

©2014 TEMPO SEMICONDCUTOR, INC..

Field Name	Bits	R/W	Default	Reset
AmpParOvrd	3	R	0h	N/A (Hard-coded)
	Amplifier capabilities override: 1 = yes, no.			
OutAmpPrsnt	2	R	0h	N/A (Hard-coded)
	Output amp present: 1 = yes, 0 = no.			
InAmpPrsnt	1	R	1h	N/A (Hard-coded)
	Input amp present: 1 = yes, 0 = no.			
Stereo	0	R	1h	N/A (Hard-coded)
	Stereo stream support: 1 = yes (stereo), 0 = no (mono).			

6.13.1. DMic0 (NID = 11h): PinCap

Reg	Byte 4 (Bits 31:24)	Byte 3 (Bits 23:16)	Byte 2 (Bits 15:8)	Byte 1 (Bits 7:0)
Set				
Get	F000Ch			

Field Name	Bits	R/W	Default	Reset
Rsvd2	31:17	R	0000h	N/A (Hard-coded)
	Reserved.			
EapdCap	16	R	0h	N/A (Hard-coded)
	EAPD support: 1 = yes, 0 = no.			
VRefCntrl	15:8	R	00h	N/A (Hard-coded)
	Vref support: bit 7 = Reserved bit 6 = Reserved bit 5 = 100% support (1 = yes, 0 = no) bit 4 = 80% support (1 = yes, 0 = no) bit 3 = Reserved bit 2 = GND support (1 = yes, 0 = no) bit 1 = 50% support (1 = yes, 0 = no) bit 0 = Hi-Z support (1 = yes, 0 = no)			
Rsvd1	7	R	0h	N/A (Hard-coded)
	Reserved.			

©2014 TEMPO SEMICONDCUTOR, INC..

Field Name	Bits	R/W	Default	Reset
BalancedIO	6	R	0h	N/A (Hard-coded)
	Balanced I/O support: 1 = yes, 0 = no.			
InCap	5	R	1h	N/A (Hard-coded)
	Input support: 1 = yes, 0 = no.			
OutCap	4	R	0h	N/A (Hard-coded)
	Output support: 1 = yes, 0 = no.			
HPhnDrvCap	3	R	0h	N/A (Hard-coded)
	Headphone amp present: 1 = yes, 0 = no.			
PresDtctCap	2	R	0h	N/A (Hard-coded)
	Presence detection support: 1 = yes, 0 = no.			
TrigRqd	1	R	0h	N/A (Hard-coded)
	Trigger required for impedance sense: 1 = yes, 0 = no.			
ImpSenseCap	0	R	0h	N/A (Hard-coded)
	Impedance sense support: 1 = yes, 0 = no.			

6.13.2. DMic0 (NID = 11h): InAmpLeft

Reg	Byte 4 (Bits 31:24)	Byte 3 (Bits 23:16)	Byte 2 (Bits 15:8)	Byte 1 (Bits 7:0)
Set				360h
Get	B2000h			

Field Name	Bits	R/W	Default	Reset
Rsvd1	31:2	R	00000000h	N/A (Hard-coded)
	Reserved.			
Gain	1:0	RW	0h	POR - DAFG - ULR
	Amp gain step number (see InAmpCap parameter pertaining to this widget).			

6.13.3. DMic0 (NID = 11h): InAmpRight

Reg	Byte 4 (Bits 31:24)	Byte 3 (Bits 23:16)	Byte 2 (Bits 15:8)	Byte 1 (Bits 7:0)
Set				350h

©2014 TEMPO SEMICONDCUTOR, INC..

6.13.3. DMic0 (NID = 11h): InAmpRight

Reg	Byte 4 (Bits 31:24)	Byte 3 (Bits 23:16)	Byte 2 (Bits 15:8)	Byte 1 (Bits 7:0)
Get	B0000h			

Field Name	Bits	R/W	Default	Reset
Rsvd1	31:2	R	00000000h	N/A (Hard-coded)
	Reserved.			
Gain	1:0	RW	0h	POR - DAFG - ULR
	Amp gain step number (see InAmpCap parameter pertaining to this widget).			

6.13.4. DMic0 (NID = 11h): PwrState

Reg	Byte 4 (Bits 31:24)	Byte 3 (Bits 23:16)	Byte 2 (Bits 15:8)	Byte 1 (Bits 7:0)
Set				705h
Get	F0500h			

Field Name	Bits	R/W	Default	Reset
Rsvd4	31:11	R	000000h	N/A (Hard-coded)
	Reserved.			
SettingsReset	10	R	1h	POR - DAFG - ULR
	Indicates if any persistent settings in this Widget have been reset. Cleared by PwrState 'Get', or a 'Set' to any Verb in this Widget.			
Rsvd3	9	R	0h	N/A (Hard-coded)
	Reserved.			
Error	8	R	0h	POR - DAFG - ULR
	Error indicator: 1 = cannot enter requested power state, 0 = no problem with requested power state.			
Rsvd2	7:6	R	0h	N/A (Hard-coded)
	Reserved.			
Act	5:4	R	3h	POR - DAFG - LR
	Actual power state of this widget.			

©2014 TEMPO SEMICONDCUTOR, INC..

Field Name	Bits	R/W	Default	Reset
Rsvd1	3:2	R	0h	N/A (Hard-coded)
	Reserved.			
Set	1:0	RW	0h	POR - DAFG - LR
	Current power state setting for this widget.			

6.13.5. DMic0 (NID = 11h): PinWCntrl

Reg	Byte 4 (Bits 31:24)	Byte 3 (Bits 23:16)	Byte 2 (Bits 15:8)	Byte 1 (Bits 7:0)
Set				707h
Get	F0700h			

Field Name	Bits	R/W	Default	Reset
Rsvd2	31:6	R	0000000h	N/A (Hard-coded)
	Reserved.			
InEn	5	RW	0h	POR - DAFG - ULR
	Input enable: 1 = enabled, 0 = disabled.			
Rsvd1	4:0	R	00h	N/A (Hard-coded)
	Reserved.			

6.13.6. DMic0 (NID = 11h): ConfigDefault

Reg	Byte 4 (Bits 31:24)	Byte 3 (Bits 23:16)	Byte 2 (Bits 15:8)	Byte 1 (Bits 7:0)
Set	71Fh	71Eh	71Dh	71Ch
Get	F1F00h / F1E00h / F1D00h / F1C00h			

©2014 TEMPO SEMICONDCUTOR, INC..

Field Name	Bits	R/W	Default	Reset
PortConnectivity	31:30	RW	2h	POR
	Port connectivity: 0h = Port complex is connected to a jack 1h = No physical connection for port 2h = Fixed function device is attached 3h = Both jack and internal device attached (info in all other fields refers to integrated device, any presence detection refers to jack)			
Location	29:24	RW	10h	POR
	Location Bits [5..4]: 0h = External on primary chassis 1h = Internal 2h = Separate chassis 3h = Other Bits [3..0]: 0h = N/A 1h = Rear 2h = Front 3h = Left 4h = Right 5h = Top 6h = Bottom 7h-9h = Special Ah-Fh = Reserved			
Device	23:20	RW	Ah	POR
	Default device: 0h = Line out 1h = Speaker 2h = HP out 3h = CD 4h = SPDIF Out 5h = Digital other out 6h = Modem line side 7h = Modem handset side 8h = Line in 9h = Aux Ah = Mic in Bh = Telephony Ch = SPDIF In Dh = Digital other in Eh = Reserved Fh = Other			

©2014 TEMPO SEMICONDCUTOR, INC..

Field Name	Bits	R/W	Default	Reset
ConnectionType	19:16	RW	3h	POR
	Connection type: 0h = Unknown 1h = 1/8" stereo/mono 2h = 1/4" stereo/mono 3h = ATAPI internal 4h = RCA 5h = Optical 6h = Other digital 7h = Other analog 8h = Multichannel analog (DIN) 9h = XLR/Professional Ah = RJ-11 (modem) Bh = Combination Ch-Eh = Reserved Fh = Other			
Color	15:12	RW	0h	POR
	Color: 0h = Unknown 1h = Black 2h = Grey 3h = Blue 4h = Green 5h = Red 6h = Orange 7h = Yellow 8h = Purple 9h = Pink Ah-Dh = Reserved Eh = White Fh = Other			
Misc	11:8	RW	1h	POR
	Miscellaneous: Bits [3..1] = Reserved Bit 0 = Jack detect override			
Association	7:4	RW	4h	POR
	Default assocation.			
Sequence	3:0	RW	1h	POR
	Sequence.			

©2014 TEMPO SEMICONDCUTOR, INC..

6.14. DMic1Vol (NID = 12h): WCap

Reg	Byte 4 (Bits 31:24)	Byte 3 (Bits 23:16)	Byte 2 (Bits 15:8)	Byte 1 (Bits 7:0)
Set				
Get	F0009h			

Field Name	Bits	R/W	Default	Reset
Rsvd2	31:24	R	00h	N/A (Hard-coded)
	Reserved.			
Type	23:20	R	Fh	N/A (Hard-coded)
	Widget type: 0h = Out Converter 1h = In Converter 2h = Summing (Mixer) 3h = Selector (Mux) 4h = Pin Complex 5h = Power 6h = Volume Knob 7h = Beep Generator 8h-Eh = Reserved Fh = Vendor Defined			
Delay	19:16	R	0h	N/A (Hard-coded)
	Number of sample delays through widget.			
Rsvd1	15:12	R	0h	N/A (Hard-coded)
	Reserved.			
SwapCap	11	R	0h	N/A (Hard-coded)
	Left/right swap support: 1 = yes, 0 = no.			
PwrCntrl	10	R	1h	N/A (Hard-coded)
	Power state support: 1 = yes, 0 = no.			
DigitalStrm	9	R	0h	N/A (Hard-coded)
	Digital stream support: 1 = yes (digital), 0 = no (analog).			
ConnList	8	R	1h	N/A (Hard-coded)
	Connection list present: 1 = yes, 0 = no.			
UnsolCap	7	R	0h	N/A (Hard-coded)
	Unsolicited response support: 1 = yes, 0 = no.			

©2014 TEMPO SEMICONDCUTOR, INC..

Field Name	Bits	R/W	Default	Reset
ProcWidget	6	R	0h	N/A (Hard-coded)
	Processing state support: 1 = yes, 0 = no.			
Stripe	5	R	0h	N/A (Hard-coded)
	Striping support: 1 = yes, 0 = no.			
FormatOvrd	4	R	0h	N/A (Hard-coded)
	Stream format override: 1 = yes, 0 = no.			
AmpParOvrd	3	R	0h	N/A (Hard-coded)
	Amplifier capabilities override: 1 = yes, no.			
OutAmpPrsnt	2	R	0h	N/A (Hard-coded)
	Output amp present: 1 = yes, 0 = no.			
InAmpPrsnt	1	R	1h	N/A (Hard-coded)
	Input amp present: 1 = yes, 0 = no.			
Stereo	0	R	1h	N/A (Hard-coded)
	Stereo stream support: 1 = yes (stereo), 0 = no (mono).			

6.14.1. DMic1Vol (NID = 12h): ConLst

Reg	Byte 4 (Bits 31:24)	Byte 3 (Bits 23:16)	Byte 2 (Bits 15:8)	Byte 1 (Bits 7:0)
Set				
Get	F000Eh			

Field Name	Bits	R/W	Default	Reset
Rsvd	31:8	R	000000h	N/A (Hard-coded)
	Reserved.			
LForm	7	R	0h	N/A (Hard-coded)
	Connection list format: 1 = long-form (15-bit) NID entries, 0 = short-form (7-bit) NID entries.			
ConL	6:0	R	02h	N/A (Hard-coded)
	Number of NID entries in connection list.			

©2014 TEMPO SEMICONDCUTOR, INC..

6.14.2. DMic1Vol (NID = 12h): ConLstEntry0

Reg	Byte 4 (Bits 31:24)	Byte 3 (Bits 23:16)	Byte 2 (Bits 15:8)	Byte 1 (Bits 7:0)
Set				
Get	F0200h			

Field Name	Bits	R/W	Default	Reset
ConL3	31:24	R	00h	N/A (Hard-coded)
	Unused list entry.			
ConL2	23:16	R	00h	N/A (Hard-coded)
	Unused list entry.			
ConL1	15:8	R	20h	N/A (Hard-coded)
	Dig1Pin Pin widget (0x20)			
ConL0	7:0	R	1Fh	N/A (Hard-coded)
	Dig1Pin Pin widget (0x1F)			

6.14.3. DMic1Vol (NID = 12h): InAmpLeft

Reg	Byte 4 (Bits 31:24)	Byte 3 (Bits 23:16)	Byte 2 (Bits 15:8)	Byte 1 (Bits 7:0)
Set				360h
Get	B2000h			

Field Name	Bits	R/W	Default	Reset
Rsvd1	31:2	R	00000000h	N/A (Hard-coded)
	Reserved.			
Gain	1:0	RW	0h	POR - DAFG - ULR
	Amp gain step number (see InAmpCap parameter pertaining to this widget).			

6.14.4. DMic1Vol (NID = 12h): InAmpRight

Reg	Byte 4 (Bits 31:24)	Byte 3 (Bits 23:16)	Byte 2 (Bits 15:8)	Byte 1 (Bits 7:0)
Set				350h
Get	B0000h			

©2014 TEMPO SEMICONDCUTOR, INC..

Field Name	Bits	R/W	Default	Reset
Rsvd1	31:2	R	00000000h	N/A (Hard-coded)
	Reserved.			
Gain	1:0	RW	0h	POR - DAFG - ULR
	Amp gain step number (see InAmpCap parameter pertaining to this widget).			

6.14.5. DMic1Vol (NID = 12h): ConSelectCtrl

Reg	Byte 4 (Bits 31:24)	Byte 3 (Bits 23:16)	Byte 2 (Bits 15:8)	Byte 1 (Bits 7:0)
Set				701h
Get	F0100h			

Field Name	Bits	R/W	Default	Reset
Rsvd	31:1	R	00000000h	N/A (Hard-coded)
	Reserved.			
Index	0	RW	0h	POR - DAFG - ULR
	Connection select control index.			

6.14.6. DMic1Vol (NID = 12h): PwrState

Reg	Byte 4 (Bits 31:24)	Byte 3 (Bits 23:16)	Byte 2 (Bits 15:8)	Byte 1 (Bits 7:0)
Set				705h
Get	F0500h			

Field Name	Bits	R/W	Default	Reset
Rsvd4	31:11	R	000000h	N/A (Hard-coded)
	Reserved.			
SettingsReset	10	R	1h	POR - DAFG - ULR
	Indicates if any persistent settings in this Widget have been reset. Cleared by PwrState 'Get', or a 'Set' to any Verb in this Widget.			
Rsvd3	9	R	0h	N/A (Hard-coded)
	Reserved.			

©2014 TEMPO SEMICONDCUTOR, INC..

Field Name	Bits	R/W	Default	Reset
Error	8	R	0h	POR - DAFG - ULR
	Error indicator: 1 = cannot enter requested power state, 0 = no problem with requested power state.			
Rsvd2	7:6	R	0h	N/A (Hard-coded)
	Reserved.			
Act	5:4	R	3h	POR - DAFG - LR
	Actual power state of this widget.			
Rsvd1	3:2	R	0h	N/A (Hard-coded)
	Reserved.			
Set	1:0	RW	0h	POR - DAFG - LR
	Current power state setting for this widget.			

6.15. DAC0 (NID = 13h): WCap

Reg	Byte 4 (Bits 31:24)	Byte 3 (Bits 23:16)	Byte 2 (Bits 15:8)	Byte 1 (Bits 7:0)
Set				
Get	F0009h			

Field Name	Bits	R/W	Default	Reset
Rsvd2	31:24	R	00h	N/A (Hard-coded)
	Reserved.			
Type	23:20	R	0h	N/A (Hard-coded)
	Widget type: 0h = Out Converter 1h = In Converter 2h = Summing (Mixer) 3h = Selector (Mux) 4h = Pin Complex 5h = Power 6h = Volume Knob 7h = Beep Generator 8h-Eh = Reserved Fh = Vendor Defined			

©2014 TEMPO SEMICONDCUTOR, INC..

Field Name	Bits	R/W	Default	Reset
Delay	19:16	R	Dh	N/A (Hard-coded)
	Number of sample delays through widget.			
Rsvd1	15:12	R	0h	N/A (Hard-coded)
	Reserved.			
SwapCap	11	R	1h	N/A (Hard-coded)
	Left/right swap support: 1 = yes, 0 = no.			
PwrCntrl	10	R	1h	N/A (Hard-coded)
	Power state support: 1 = yes, 0 = no.			
Dig	9	R	0h	N/A (Hard-coded)
	Digital stream support: 1 = yes (digital), 0 = no (analog).			
ConnList	8	R	0h	N/A (Hard-coded)
	Connection list present: 1 = yes, 0 = no.			
UnSolCap	7	R	0h	N/A (Hard-coded)
	Unsolicited response support: 1 = yes, 0 = no.			
ProcWidget	6	R	0h	N/A (Hard-coded)
	Processing state support: 1 = yes, 0 = no.			
Stripe	5	R	0h	N/A (Hard-coded)
	Striping support: 1 = yes, 0 = no.			
FormatOvrd	4	R	0h	N/A (Hard-coded)
	Stream format override: 1 = yes, 0 = no.			
AmpParOvrd	3	R	0h	N/A (Hard-coded)
	Amplifier capabilities override: 1 = yes, no.			
OutAmpPrsnt	2	R	1h	N/A (Hard-coded)
	Output amp present: 1 = yes, 0 = no.			
InAmpPrsnt	1	R	0h	N/A (Hard-coded)
	Input amp present: 1 = yes, 0 = no.			
Stereo	0	R	1h	N/A (Hard-coded)
	Stereo stream support: 1 = yes (stereo), 0 = no (mono).			

©2014 TEMPO SEMICONDCUTOR, INC..

6.15.1. DAC0 (NID = 13h): Cnvtr

Reg	Byte 4 (Bits 31:24)	Byte 3 (Bits 23:16)	Byte 2 (Bits 15:8)	Byte 1 (Bits 7:0)
Set			2h	
Get	A0000h			

Field Name	Bits	R/W	Default	Reset
Rsvd2	31:16	R	0000h	N/A (Hard-coded)
	Reserved.			
StrmType	15	R	0h	N/A (Hard-coded)
	Stream type: 1 = Non-PCM, 0 = PCM.			
FrmtSmplRate	14	RW	0h	POR - DAFG - ULR
	Sample base rate: 1 = 44.1kHz, 0 = 48kHz.			
SmplRateMultp	13:11	RW	0h	POR - DAFG - ULR
	Sample base rate multiple: 000b= x1 (48kHz/44.1kHz or less) 001b= x2 (96kHz/88.2kHz/32kHz) 010b= x3 (144kHz) 011b= x4 (192kHz/176.4kHz) 100b-111b Reserved			
SmplRateDiv	10:8	RW	0h	POR - DAFG - ULR
	Sample base rate divider: 000b= Divide by 1 (48kHz/44.1kHz) 001b= Divide by 2 (24kHz/20.05kHz) 010b= Divide by 3 (16kHz/32kHz) 011b= Divide by 4 (11.025kHz) 100b= Divide by 5 (9.6kHz) 101b= Divide by 6 (8kHz) 110b= Divide by 7 111b= Divide by 8 (6kHz)			
Rsvd1	7	R	0h	N/A (Hard-coded)
	Reserved.			

©2014 TEMPO SEMICONDCUTOR, INC..

Field Name	Bits	R/W	Default	Reset
BitsPerSmpl	6:4	RW	3h	POR - DAFG - ULR
	Bits per sample: 000b= 8 bits 001b= 16 bits 010b= 20 bits 011b= 24 bits 100b= 32 bits 101b-111b= Reserved			
NmbrChan	3:0	RW	1h	POR - DAFG - ULR
	Total number of channels in the stream assigned to this converter: 0000b-1111b= 1-16 channels.			

6.15.2. DAC0 (NID = 13h): OutAmpLeft

Reg	Byte 4 (Bits 31:24)	Byte 3 (Bits 23:16)	Byte 2 (Bits 15:8)	Byte 1 (Bits 7:0)
Set				3A0h
Get	BA000h			

Field Name	Bits	R/W	Default	Reset
Rsvd	31:8	R	000000h	N/A (Hard-coded)
	Reserved.			
Mute	7	RW	1h	POR - DAFG - ULR
	Amp mute: 1 = muted, 0 = not muted.			
Gain	6:0	RW	7Fh	POR - DAFG - ULR
	Amp gain step number (see OutAmpCap parameter pertaining to this widget).			

6.15.3. DAC0 (NID = 13h): OutAmpRight

Reg	Byte 4 (Bits 31:24)	Byte 3 (Bits 23:16)	Byte 2 (Bits 15:8)	Byte 1 (Bits 7:0)
Set				390h
Get	B8000h			

©2014 TEMPO SEMICONDCUTOR, INC..

Field Name	Bits	R/W	Default	Reset
Rsvd	31:8	R	000000h	N/A (Hard-coded)
	Reserved.			
Mute	7	RW	1h	POR - DAFG - ULR
	Amp mute: 1 = muted, 0 = not muted.			
Gain	6:0	RW	7Fh	POR - DAFG - ULR
	Amp gain step number (see OutAmpCap parameter pertaining to this widget).			

6.15.4. DAC0 (NID = 13h): PwrState

Reg	Byte 4 (Bits 31:24)	Byte 3 (Bits 23:16)	Byte 2 (Bits 15:8)	Byte 1 (Bits 7:0)
Set				705h
Get	F0500h			

Field Name	Bits	R/W	Default	Reset
Rsvd4	31:11	R	000000h	N/A (Hard-coded)
	Reserved.			
SettingsReset	10	R	1h	POR - DAFG - ULR
	Indicates if any persistent settings in this Widget have been reset. Cleared by PwrState 'Get', or a 'Set' to any Verb in this Widget.			
Rsvd3	9	R	0h	N/A (Hard-coded)
	Reserved.			
Error	8	R	0h	POR - DAFG - ULR
	Error indicator: 1 = cannot enter requested power state, 0 = no problem with requested power state.			
Rsvd2	7:6	R	0h	N/A (Hard-coded)
	Reserved.			
Act	5:4	R	3h	POR - DAFG - LR
	Actual power state of this widget.			
Rsvd1	3:2	R	0h	N/A (Hard-coded)
	Reserved.			

©2014 TEMPO SEMICONDCUTOR, INC..

Field Name	Bits	R/W	Default	Reset
Set	1:0	RW	3h	POR - DAFG - LR
	Current power state setting for this widget.			

6.15.5. DAC0 (NID = 13h): CnvtrID

Reg	Byte 4 (Bits 31:24)	Byte 3 (Bits 23:16)	Byte 2 (Bits 15:8)	Byte 1 (Bits 7:0)
Set				706h
Get	F0600h			

Field Name	Bits	R/W	Default	Reset
Rsvd	31:8	R	000000h	N/A (Hard-coded)
	Reserved.			
Strm	7:4	RW	0h	POR - S&DAFG - LR - PS
	Stream ID: 0h = Converter "off", 1h-Fh = valid ID's.			
Ch	3:0	RW	0h	POR - S&DAFG - LR - PS
	Channel assignment ("Ch" and "Ch+1" assigned as a pair, for a stereo converter).			

6.15.6. DAC0 (NID = 13h): EAPDBTLLR

Reg	Byte 4 (Bits 31:24)	Byte 3 (Bits 23:16)	Byte 2 (Bits 15:8)	Byte 1 (Bits 7:0)
Set				70Ch
Get	F0C00h			

Field Name	Bits	R/W	Default	Reset
Rsvd2	31:3	R	00000000h	N/A (Hard-coded)
	Reserved.			
SwapEn	2	RW	0h	POR - DAFG - ULR
	Swap enable: 1 = L/R swap enabled, 0 = L/R swap disabled.			
Rsvd1	1:0	R	0h	N/A (Hard-coded)
	Reserved.			

©2014 TEMPO SEMICONDCUTOR, INC..

6.16. DAC1 (NID = 14h): WCap

Reg	Byte 4 (Bits 31:24)	Byte 3 (Bits 23:16)	Byte 2 (Bits 15:8)	Byte 1 (Bits 7:0)
Set				
Get	F0009h			

Field Name	Bits	R/W	Default	Reset
Rsvd2	31:24	R	00h	N/A (Hard-coded)
	Reserved.			
Type	23:20	R	0h	N/A (Hard-coded)
	Widget type: 0h = Out Converter 1h = In Converter 2h = Summing (Mixer) 3h = Selector (Mux) 4h = Pin Complex 5h = Power 6h = Volume Knob 7h = Beep Generator 8h-Eh = Reserved Fh = Vendor Defined			
Delay	19:16	R	Dh	N/A (Hard-coded)
	Number of sample delays through widget.			
Rsvd1	15:12	R	0h	N/A (Hard-coded)
	Reserved.			
SwapCap	11	R	1h	N/A (Hard-coded)
	Left/right swap support: 1 = yes, 0 = no.			
PwrCntrl	10	R	1h	N/A (Hard-coded)
	Power state support: 1 = yes, 0 = no.			
Dig	9	R	0h	N/A (Hard-coded)
	Digital stream support: 1 = yes (digital), 0 = no (analog).			
ConnList	8	R	0h	N/A (Hard-coded)
	Connection list present: 1 = yes, 0 = no.			
UnSolCap	7	R	0h	N/A (Hard-coded)
	Unsolicited response support: 1 = yes, 0 = no.			

©2014 TEMPO SEMICONDCUTOR, INC..

Field Name	Bits	R/W	Default	Reset
ProcWidget	6	R	0h	N/A (Hard-coded)
	Processing state support: 1 = yes, 0 = no.			
Stripe	5	R	0h	N/A (Hard-coded)
	Striping support: 1 = yes, 0 = no.			
FormatOvrd	4	R	0h	N/A (Hard-coded)
	Stream format override: 1 = yes, 0 = no.			
AmpParOvrd	3	R	0h	N/A (Hard-coded)
	Amplifier capabilities override: 1 = yes, no.			
OutAmpPrsnt	2	R	1h	N/A (Hard-coded)
	Output amp present: 1 = yes, 0 = no.			
InAmpPrsnt	1	R	0h	N/A (Hard-coded)
	Input amp present: 1 = yes, 0 = no.			
Stereo	0	R	1h	N/A (Hard-coded)
	Stereo stream support: 1 = yes (stereo), 0 = no (mono).			

6.16.1. DAC1 (NID = 14h): Cnvtr

Reg	Byte 4 (Bits 31:24)	Byte 3 (Bits 23:16)	Byte 2 (Bits 15:8)	Byte 1 (Bits 7:0)
Set			2h	
Get	A0000h			

Field Name	Bits	R/W	Default	Reset
Rsvd2	31:16	R	0000h	N/A (Hard-coded)
	Reserved.			
StrmType	15	R	0h	N/A (Hard-coded)
	Stream type: 1 = Non-PCM, 0 = PCM.			
FrmtSmplRate	14	RW	0h	POR - DAFG - ULR
	Sample base rate: 1 = 44.1kHz, 0 = 48kHz.			

©2014 TEMPO SEMICONDCUTOR, INC..

Field Name	Bits	R/W	Default	Reset
SmplRateMultp	13:11	RW	0h	POR - DAFG - ULR
	Sample base rate multiple: 000b= x1 (48kHz/44.1kHz or less) 001b= x2 (96kHz/88.2kHz/32kHz) 010b= x3 (144kHz) 011b= x4 (192kHz/176.4kHz) 100b-111b Reserved			
SmplRateDiv	10:8	RW	0h	POR - DAFG - ULR
	Sample base rate divider: 000b= Divide by 1 (48kHz/44.1kHz) 001b= Divide by 2 (24kHz/20.05kHz) 010b= Divide by 3 (16kHz/32kHz) 011b= Divide by 4 (11.025kHz) 100b= Divide by 5 (9.6kHz) 101b= Divide by 6 (8kHz) 110b= Divide by 7 111b= Divide by 8 (6kHz)			
Rsvd1	7	R	0h	N/A (Hard-coded)
	Reserved.			
BitsPerSmpl	6:4	RW	3h	POR - DAFG - ULR
	Bits per sample: 000b= 8 bits 001b= 16 bits 010b= 20 bits 011b= 24 bits 100b= 32 bits 101b-111b= Reserved			
NmbrChan	3:0	RW	1h	POR - DAFG - ULR
	Total number of channels in the stream assigned to this converter: 0000b-1111b= 1-16 channels.			

6.16.2. DAC1 (NID = 14h): OutAmpLeft

Reg	Byte 4 (Bits 31:24)	Byte 3 (Bits 23:16)	Byte 2 (Bits 15:8)	Byte 1 (Bits 7:0)
Set				3A0h
Get	BA000h			

©2014 TEMPO SEMICONDCUTOR, INC..

Field Name	Bits	R/W	Default	Reset
Rsvd	31:8	R	000000h	N/A (Hard-coded)
	Reserved.			
Mute	7	RW	1h	POR - DAFG - ULR
	Amp mute: 1 = muted, 0 = not muted.			
Gain	6:0	RW	7Fh	POR - DAFG - ULR
	Amp gain step number (see OutAmpCap parameter pertaining to this widget).			

6.16.3. DAC1 (NID = 14h): OutAmpRight

Reg	Byte 4 (Bits 31:24)	Byte 3 (Bits 23:16)	Byte 2 (Bits 15:8)	Byte 1 (Bits 7:0)
Set				390h
Get	B8000h			

Field Name	Bits	R/W	Default	Reset
Rsvd	31:8	R	000000h	N/A (Hard-coded)
	Reserved.			
Mute	7	RW	1h	POR - DAFG - ULR
	Amp mute: 1 = muted, 0 = not muted.			
Gain	6:0	RW	7Fh	POR - DAFG - ULR
	Amp gain step number (see OutAmpCap parameter pertaining to this widget).			

6.16.4. DAC1 (NID = 14h): PwrState

Reg	Byte 4 (Bits 31:24)	Byte 3 (Bits 23:16)	Byte 2 (Bits 15:8)	Byte 1 (Bits 7:0)
Set				705h
Get	F0500h			

Field Name	Bits	R/W	Default	Reset
Rsvd4	31:11	R	000000h	N/A (Hard-coded)
	Reserved.			

©2014 TEMPO SEMICONDCUTOR, INC..

Field Name	Bits	R/W	Default	Reset
SettingsReset	10	R	1h	POR - DAFG - ULR
	Indicates if any persistent settings in this Widget have been reset. Cleared by PwrState 'Get', or a 'Set' to any Verb in this Widget.			
Rsvd3	9	R	0h	N/A (Hard-coded)
	Reserved.			
Error	8	R	0h	POR - DAFG - ULR
	Error indicator: 1 = cannot enter requested power state, 0 = no problem with requested power state.			
Rsvd2	7:6	R	0h	N/A (Hard-coded)
	Reserved.			
Act	5:4	R	3h	POR - DAFG - LR
	Actual power state of this widget.			
Rsvd1	3:2	R	0h	N/A (Hard-coded)
	Reserved.			
Set	1:0	RW	3h	POR - DAFG - LR
	Current power state setting for this widget.			

6.16.5. DAC1 (NID = 14h): CnvtrID

Reg	Byte 4 (Bits 31:24)	Byte 3 (Bits 23:16)	Byte 2 (Bits 15:8)	Byte 1 (Bits 7:0)
Set				706h
Get	F0600h			

Field Name	Bits	R/W	Default	Reset
Rsvd	31:8	R	000000h	N/A (Hard-coded)
	Reserved.			
Strm	7:4	RW	0h	POR - S&DAFG - LR - PS
	Stream ID: 0h = Converter "off", 1h-Fh = valid ID's.			
Ch	3:0	RW	0h	POR - S&DAFG - LR - PS
	Channel assignment ("Ch" and "Ch+1" assigned as a pair, for a stereo converter).			

©2014 TEMPO SEMICONDCUTOR, INC..

6.16.6. DAC1 (NID = 14h): EAPDBTLLR

Reg	Byte 4 (Bits 31:24)	Byte 3 (Bits 23:16)	Byte 2 (Bits 15:8)	Byte 1 (Bits 7:0)
Set				70Ch
Get	F0C00h			

Field Name	Bits	R/W	Default	Reset
Rsvd2	31:3	R	00000000h	N/A (Hard-coded)
	Reserved.			
SwapEn	2	RW	0h	POR - DAFG - ULR
	Swap enable: 1 = L/R swap enabled, 0 = L/R swap disabled.			
Rsvd1	1:0	R	0h	N/A (Hard-coded)
	Reserved.			

6.17. ADC0 (NID = 15h): WCap

Reg	Byte 4 (Bits 31:24)	Byte 3 (Bits 23:16)	Byte 2 (Bits 15:8)	Byte 1 (Bits 7:0)
Set				
Get	F0009h			

Field Name	Bits	R/W	Default	Reset
Rsvd2	31:24	R	00h	N/A (Hard-coded)
	Reserved.			
Type	23:20	R	1h	N/A (Hard-coded)
	Widget type: 0h = Out Converter 1h = In Converter 2h = Summing (Mixer) 3h = Selector (Mux) 4h = Pin Complex 5h = Power 6h = Volume Knob 7h = Beep Generator 8h-Eh = Reserved Fh = Vendor Defined			

©2014 TEMPO SEMICONDCUTOR, INC..

Field Name	Bits	R/W	Default	Reset
Delay	19:16	R	Dh	N/A (Hard-coded)
	Number of sample delays through widget.			
Rsvd1	15:12	R	0h	N/A (Hard-coded)
	Reserved.			
SwapCap	11	R	0h	N/A (Hard-coded)
	Left/right swap support: 1 = yes, 0 = no.			
PwrCntrl	10	R	1h	N/A (Hard-coded)
	Power state support: 1 = yes, 0 = no.			
Dig	9	R	0h	N/A (Hard-coded)
	Digital stream support: 1 = yes (digital), 0 = no (analog).			
ConnList	8	R	1h	N/A (Hard-coded)
	Connection list present: 1 = yes, 0 = no.			
UnSolCap	7	R	0h	N/A (Hard-coded)
	Unsolicited response support: 1 = yes, 0 = no.			
ProcWidget	6	R	1h	N/A (Hard-coded)
	Processing state support: 1 = yes, 0 = no.			
Stripe	5	R	0h	N/A (Hard-coded)
	Striping support: 1 = yes, 0 = no.			
FormatOvrd	4	R	0h	N/A (Hard-coded)
	Stream format override: 1 = yes, 0 = no.			
AmpParOvrd	3	R	0h	N/A (Hard-coded)
	Amplifier capabilities override: 1 = yes, no.			
OutAmpPrsnt	2	R	0h	N/A (Hard-coded)
	Output amp present: 1 = yes, 0 = no.			
InAmpPrsnt	1	R	0h	N/A (Hard-coded)
	Input amp present: 1 = yes, 0 = no.			
Stereo	0	R	1h	N/A (Hard-coded)
	Stereo stream support: 1 = yes (stereo), 0 = no (mono).			

©2014 TEMPO SEMICONDCUTOR, INC..

6.17.1. ADC0 (NID = 15h): ConLst

Reg	Byte 4 (Bits 31:24)	Byte 3 (Bits 23:16)	Byte 2 (Bits 15:8)	Byte 1 (Bits 7:0)
Set				
Get	F000Eh			

Field Name	Bits	R/W	Default	Reset
Rsvd	31:8	R	000000h	N/A (Hard-coded)
	Reserved.			
LForm	7	R	0h	N/A (Hard-coded)
	Connection list format: 1 = long-form (15-bit) NID entries, 0 = short-form (7-bit) NID entries.			
ConL	6:0	R	01h	N/A (Hard-coded)
	Number of NID entries in connection list.			

6.17.2. ADC0 (NID = 15h): ConLstEntry0

Reg	Byte 4 (Bits 31:24)	Byte 3 (Bits 23:16)	Byte 2 (Bits 15:8)	Byte 1 (Bits 7:0)
Set				
Get	F0200h			

Field Name	Bits	R/W	Default	Reset
ConL3	31:24	R	00h	N/A (Hard-coded)
	Unused list entry.			
ConL2	23:16	R	00h	N/A (Hard-coded)
	Unused list entry.			
ConL1	15:8	R	00h	N/A (Hard-coded)
	Unused list entry.			
ConL0	7:0	R	17h	N/A (Hard-coded)
	ADC0Mux Selector widget (0x17)			

©2014 TEMPO SEMICONDCUTOR, INC..

6.17.3. ADC0 (NID = 15h): Cnvtr

Reg	Byte 4 (Bits 31:24)	Byte 3 (Bits 23:16)	Byte 2 (Bits 15:8)	Byte 1 (Bits 7:0)
Set			2h	
Get	A0000h			

Field Name	Bits	R/W	Default	Reset
Rsvd2	31:16	R	0000h	N/A (Hard-coded)
	Reserved.			
StrmType	15	R	0h	N/A (Hard-coded)
	Stream type: 1 = Non-PCM, 0 = PCM.			
FrmtSmplRate	14	RW	0h	POR - DAFG - ULR
	Sample base rate: 1 = 44.1kHz, 0 = 48kHz.			
SmplRateMultp	13:11	RW	0h	POR - DAFG - ULR
	Sample base rate multiple: 000b= x1 (48kHz/44.1kHz or less) 001b= x2 (96kHz/88.2kHz/32kHz) 010b= x3 (144kHz) 011b= x4 (192kHz/176.4kHz) 100b-111b Reserved			
SmplRateDiv	10:8	RW	0h	POR - DAFG - ULR
	Sample base rate divider: 000b= Divide by 1 (48kHz/44.1kHz) 001b= Divide by 2 (24kHz/20.05kHz) 010b= Divide by 3 (16kHz/32kHz) 011b= Divide by 4 (11.025kHz) 100b= Divide by 5 (9.6kHz) 101b= Divide by 6 (8kHz) 110b= Divide by 7 111b= Divide by 8 (6kHz)			
Rsvd1	7	R	0h	N/A (Hard-coded)
	Reserved.			

©2014 TEMPO SEMICONDCUTOR, INC..

Field Name	Bits	R/W	Default	Reset
BitsPerSmpl	6:4	RW	3h	POR - DAFG - ULR
	Bits per sample: 000b= 8 bits 001b= 16 bits 010b= 20 bits 011b= 24 bits 100b= 32 bits 101b-111b= Reserved			
NmbrChan	3:0	RW	1h	POR - DAFG - ULR
	Total number of channels in the stream assigned to this converter: 0000b-1111b= 1-16 channels.			

6.17.4. ADC0 (NID = 15h): ProcState

Reg	Byte 4 (Bits 31:24)	Byte 3 (Bits 23:16)	Byte 2 (Bits 15:8)	Byte 1 (Bits 7:0)
Set				703h
Get	F0300h			

Field Name	Bits	R/W	Default	Reset
Rsvd2	31:8	R	000000h	N/A (Hard-coded)
	Reserved.			
HPFOCDIS	7	RW	0h	POR - DAFG - ULR
	HPF offset calculation disable. 1 = calculation disabled; 0 = calculation enabled.			
Rsvd1	6:2	R	00h	N/A (Hard-coded)
	Reserved.			
ADCHPFByp	1:0	RW	1h	POR - DAFG - ULR
	Processing State: 00b= bypass the ADC HPF ("off"), 01b-11b= ADC HPF is enabled ("on" or "benign").			

6.17.5. ADC0 (NID = 15h): PwrState

Reg	Byte 4 (Bits 31:24)	Byte 3 (Bits 23:16)	Byte 2 (Bits 15:8)	Byte 1 (Bits 7:0)
Set				705h
Get	F0500h			

©2014 TEMPO SEMICONDCUTOR, INC..

Field Name	Bits	R/W	Default	Reset
Rsvd4	31:11	R	000000h	N/A (Hard-coded)
	Reserved.			
SettingsReset	10	R	1h	POR - DAFG - ULR
	Indicates if any persistent settings in this Widget have been reset. Cleared by PwrState 'Get', or a 'Set' to any Verb in this Widget.			
Rsvd3	9	R	0h	N/A (Hard-coded)
	Reserved.			
Error	8	R	0h	POR - DAFG - ULR
	Error indicator: 1 = cannot enter requested power state, 0 = no problem with requested power state.			
Rsvd2	7:6	R	0h	N/A (Hard-coded)
	Reserved.			
Act	5:4	R	3h	POR - DAFG - LR
	Actual power state of this widget.			
Rsvd1	3:2	R	0h	N/A (Hard-coded)
	Reserved.			
Set	1:0	RW	3h	POR - DAFG - LR
	Current power state setting for this widget.			

6.17.6. ADC0 (NID = 15h): CnvtrID

Reg	Byte 4 (Bits 31:24)	Byte 3 (Bits 23:16)	Byte 2 (Bits 15:8)	Byte 1 (Bits 7:0)
Set				706h
Get	F0600h			

Field Name	Bits	R/W	Default	Reset
Rsvd	31:8	R	000000h	N/A (Hard-coded)
	Reserved.			
Strm	7:4	RW	0h	POR - S&DAFG - LR - PS
	Stream ID: 0h = Converter "off", 1h-Fh = valid ID's.			

©2014 TEMPO SEMICONDCUTOR, INC..

Field Name	Bits	R/W	Default	Reset
Ch	3:0	RW	0h	POR - S&DAFG - LR - PS
	Channel assignment ("Ch" and "Ch+1" assigned as a pair, for a stereo converter).			

6.18. ADC1 (NID = 1Bh): WCap

Reg	Byte 4 (Bits 31:24)	Byte 3 (Bits 23:16)	Byte 2 (Bits 15:8)	Byte 1 (Bits 7:0)
Set				
Get	F0009h			

Field Name	Bits	R/W	Default	Reset
Rsvd2	31:24	R	00h	N/A (Hard-coded)
	Reserved.			
Type	23:20	R	1h	N/A (Hard-coded)
	Widget type: 0h = Out Converter 1h = In Converter 2h = Summing (Mixer) 3h = Selector (Mux) 4h = Pin Complex 5h = Power 6h = Volume Knob 7h = Beep Generator 8h-Eh = Reserved Fh = Vendor Defined			
Delay	19:16	R	Dh	N/A (Hard-coded)
	Number of sample delays through widget.			
Rsvd1	15:12	R	0h	N/A (Hard-coded)
	Reserved.			
SwapCap	11	R	0h	N/A (Hard-coded)
	Left/right swap support: 1 = yes, 0 = no.			
PwrCntrl	10	R	1h	N/A (Hard-coded)
	Power state support: 1 = yes, 0 = no.			

©2014 TEMPO SEMICONDCUTOR, INC..

Field Name	Bits	R/W	Default	Reset
Dig	9	R	0h	N/A (Hard-coded)
	Digital stream support: 1 = yes (digital), 0 = no (analog).			
ConnList	8	R	1h	N/A (Hard-coded)
	Connection list present: 1 = yes, 0 = no.			
UnSolCap	7	R	0h	N/A (Hard-coded)
	Unsolicited response support: 1 = yes, 0 = no.			
ProcWidget	6	R	1h	N/A (Hard-coded)
	Processing state support: 1 = yes, 0 = no.			
Stripe	5	R	0h	N/A (Hard-coded)
	Striping support: 1 = yes, 0 = no.			
FormatOvrd	4	R	0h	N/A (Hard-coded)
	Stream format override: 1 = yes, 0 = no.			
AmpParOvrd	3	R	0h	N/A (Hard-coded)
	Amplifier capabilities override: 1 = yes, no.			
OutAmpPrsnt	2	R	0h	N/A (Hard-coded)
	Output amp present: 1 = yes, 0 = no.			
InAmpPrsnt	1	R	0h	N/A (Hard-coded)
	Input amp present: 1 = yes, 0 = no.			
Stereo	0	R	1h	N/A (Hard-coded)
	Stereo stream support: 1 = yes (stereo), 0 = no (mono).			

6.18.1. ADC1 (NID = 1Bh): ConLst

Reg	Byte 4 (Bits 31:24)	Byte 3 (Bits 23:16)	Byte 2 (Bits 15:8)	Byte 1 (Bits 7:0)
Set				
Get	F000Eh			

©2014 TEMPO SEMICONDCUTOR, INC..

Field Name	Bits	R/W	Default	Reset
Rsvd	31:8	R	000000h	N/A (Hard-coded)
	Reserved.			
LForm	7	R	0h	N/A (Hard-coded)
	Connection list format: 1 = long-form (15-bit) NID entries, 0 = short-form (7-bit) NID entries.			
ConL	6:0	R	01h	N/A (Hard-coded)
	Number of NID entries in connection list.			

6.18.2. ADC1 (NID = 1Bh): ConLstEntry0

Reg	Byte 4 (Bits 31:24)	Byte 3 (Bits 23:16)	Byte 2 (Bits 15:8)	Byte 1 (Bits 7:0)
Set				
Get	F0200h			

Field Name	Bits	R/W	Default	Reset
ConL3	31:24	R	00h	N/A (Hard-coded)
	Unused list entry.			
ConL2	23:16	R	00h	N/A (Hard-coded)
	Unused list entry.			
ConL1	15:8	R	00h	N/A (Hard-coded)
	Unused list entry.			
ConL0	7:0	R	18h	N/A (Hard-coded)
	ADC1Mux widget (0x18)			

6.18.3. ADC1 (NID = 1Bh): Cnvtr

Reg	Byte 4 (Bits 31:24)	Byte 3 (Bits 23:16)	Byte 2 (Bits 15:8)	Byte 1 (Bits 7:0)
Set			2h	
Get	A0000h			

©2014 TEMPO SEMICONDCUTOR, INC..

Field Name	Bits	R/W	Default	Reset
Rsvd2	31:16	R	0000h	N/A (Hard-coded)
	Reserved.			
StrmType	15	R	0h	N/A (Hard-coded)
	Stream type: 1 = Non-PCM, 0 = PCM.			
FrmtSmplRate	14	RW	0h	POR - DAFG - ULR
	Sample base rate: 1 = 44.1kHz, 0 = 48kHz.			
SmplRateMultp	13:11	RW	0h	POR - DAFG - ULR
	Sample base rate multiple: 000b= x1 (48kHz/44.1kHz or less) 001b= x2 (96kHz/88.2kHz/32kHz) 010b= x3 (144kHz) 011b= x4 (192kHz/176.4kHz) 100b-111b Reserved			
SmplRateDiv	10:8	RW	0h	POR - DAFG - ULR
	Sample base rate divider: 000b= Divide by 1 (48kHz/44.1kHz) 001b= Divide by 2 (24kHz/20.05kHz) 010b= Divide by 3 (16kHz/32kHz) 011b= Divide by 4 (11.025kHz) 100b= Divide by 5 (9.6kHz) 101b= Divide by 6 (8kHz) 110b= Divide by 7 111b= Divide by 8 (6kHz)			
Rsvd1	7	R	0h	N/A (Hard-coded)
	Reserved.			
BitsPerSmpl	6:4	RW	3h	POR - DAFG - ULR
	Bits per sample: 000b= 8 bits 001b= 16 bits 010b= 20 bits 011b= 24 bits 100b= 32 bits 101b-111b= Reserved			
NmbrChan	3:0	RW	1h	POR - DAFG - ULR
	Total number of channels in the stream assigned to this converter: 0000b-1111b= 1-16 channels.			

©2014 TEMPO SEMICONDCUTOR, INC..

6.18.4. ADC1 (NID = 1Bh): ProcState

Reg	Byte 4 (Bits 31:24)	Byte 3 (Bits 23:16)	Byte 2 (Bits 15:8)	Byte 1 (Bits 7:0)
Set				703h
Get	F0300h			

Field Name	Bits	R/W	Default	Reset
Rsvd2	31:8	R	000000h	N/A (Hard-coded)
	Reserved.			
HPFOCDIS	7	RW	0h	POR - DAFG - ULR
	HPF offset calculation disable. 1 = calculation disabled; 0 = calculation enabled.			
Rsvd1	6:2	R	00h	N/A (Hard-coded)
	Reserved.			
ADCHPFByp	1:0	RW	1h	POR - DAFG - ULR
	Processing State: 00b= bypass the ADC HPF ("off"), 01b-11b= ADC HPF is enabled ("on" or "benign").			

6.18.5. ADC1 (NID = 1Bh): PwrState

Reg	Byte 4 (Bits 31:24)	Byte 3 (Bits 23:16)	Byte 2 (Bits 15:8)	Byte 1 (Bits 7:0)
Set				705h
Get	F0500h			

Field Name	Bits	R/W	Default	Reset
Rsvd4	31:11	R	000000h	N/A (Hard-coded)
	Reserved.			
SettingsReset	10	R	1h	POR - DAFG - ULR
	Indicates if any persistent settings in this Widget have been reset. Cleared by PwrState 'Get', or a 'Set' to any Verb in this Widget.			
Rsvd3	9	R	0h	N/A (Hard-coded)
	Reserved.			

©2014 TEMPO SEMICONDCUTOR, INC..

Field Name	Bits	R/W	Default	Reset
Error	8	R	0h	POR - DAFG - ULR
	Error indicator: 1 = cannot enter requested power state, 0 = no problem with requested power state.			
Rsvd2	7:6	R	0h	N/A (Hard-coded)
	Reserved.			
Act	5:4	R	3h	POR - DAFG - LR
	Actual power state of this widget.			
Rsvd1	3:2	R	0h	N/A (Hard-coded)
	Reserved.			
Set	1:0	RW	3h	POR - DAFG - LR
	Current power state setting for this widget.			

6.18.6. ADC1 (NID = 1Bh): CnvtrID

Reg	Byte 4 (Bits 31:24)	Byte 3 (Bits 23:16)	Byte 2 (Bits 15:8)	Byte 1 (Bits 7:0)
Set				706h
Get	F0600h			

Field Name	Bits	R/W	Default	Reset
Rsvd	31:8	R	000000h	N/A (Hard-coded)
	Reserved.			
Strm	7:4	RW	0h	POR - S&DAFG - LR - PS
	Stream ID: 0h = Converter "off", 1h-Fh = valid ID's.			
Ch	3:0	RW	0h	POR - S&DAFG - LR - PS
	Channel assignment ("Ch" and "Ch+1" assigned as a pair, for a stereo converter).			

6.19. ADC0Mux (NID = 17h): WCap

Reg	Byte 4 (Bits 31:24)	Byte 3 (Bits 23:16)	Byte 2 (Bits 15:8)	Byte 1 (Bits 7:0)
Set				
Get	F0009h			

©2014 TEMPO SEMICONDCUTOR, INC..

Field Name	Bits	R/W	Default	Reset
Rsvd2	31:24	R	00h	N/A (Hard-coded)
	Reserved.			
Type	23:20	R	3h	N/A (Hard-coded)
	Widget type: 0h = Out Converter 1h = In Converter 2h = Summing (Mixer) 3h = Selector (Mux) 4h = Pin Complex 5h = Power 6h = Volume Knob 7h = Beep Generator 8h-Eh = Reserved Fh = Vendor Defined			
Delay	19:16	R	0h	N/A (Hard-coded)
	Number of sample delays through widget.			
Rsvd1	15:12	R	0h	N/A (Hard-coded)
	Reserved.			
SwapCap	11	R	1h	N/A (Hard-coded)
	Left/right swap support: 1 = yes, 0 = no.			
PwrCntrl	10	R	1h	N/A (Hard-coded)
	Power state support: 1 = yes, 0 = no.			
DigitalStrm	9	R	0h	N/A (Hard-coded)
	Digital stream support: 1 = yes (digital), 0 = no (analog).			
ConnList	8	R	1h	N/A (Hard-coded)
	Connection list present: 1 = yes, 0 = no.			
UnsolCap	7	R	0h	N/A (Hard-coded)
	Unsolicited response support: 1 = yes, 0 = no.			
ProcWidget	6	R	0h	N/A (Hard-coded)
	Processing state support: 1 = yes, 0 = no.			
Stripe	5	R	0h	N/A (Hard-coded)
	Striping support: 1 = yes, 0 = no.			

©2014 TEMPO SEMICONDCUTOR, INC..

Field Name	Bits	R/W	Default	Reset
FormatOvrd	4	R	0h	N/A (Hard-coded)
	Stream format override: 1 = yes, 0 = no.			
AmpParamOvrd	3	R	1h	N/A (Hard-coded)
	Amplifier capabilities override: 1 = yes, no.			
OutAmpPrsnt	2	R	1h	N/A (Hard-coded)
	Output amp present: 1 = yes, 0 = no.			
InAmpPrsnt	1	R	0h	N/A (Hard-coded)
	Input amp present: 1 = yes, 0 = no.			
Stereo	0	R	1h	N/A (Hard-coded)
	Stereo stream support: 1 = yes (stereo), 0 = no (mono).			

6.19.1. ADC0Mux (NID = 17h): ConLst

Reg	Byte 4 (Bits 31:24)	Byte 3 (Bits 23:16)	Byte 2 (Bits 15:8)	Byte 1 (Bits 7:0)
Set				
Get	F000Eh			

Field Name	Bits	R/W	Default	Reset
Rsvd	31:8	R	000000h	N/A (Hard-coded)
	Reserved.			
LForm	7	R	0h	N/A (Hard-coded)
	Connection list format: 1 = long-form (15-bit) NID entries, 0 = short-form (7-bit) NID entries.			
ConL	6:0	R	08h	N/A (Hard-coded)
	Number of NID entries in connection list			

6.19.2. ADC0Mux (NID = 17h): ConLstEntry4

Reg	Byte 4 (Bits 31:24)	Byte 3 (Bits 23:16)	Byte 2 (Bits 15:8)	Byte 1 (Bits 7:0)
Set				
Get	F0204h			

©2014 TEMPO SEMICONDCUTOR, INC..

Field Name	Bits	R/W	Default	Reset
ConL7	31:24	R	0Eh	N/A (Hard-coded)
	Port E Pin widget (0x0E) (Available only on 48-pin versions)			
ConL6	23:16	R	12h	N/A (Hard-coded)
	Port DMIC1 widget (0x12)			
ConL5	15:8	R	11h	N/A (Hard-coded)
	Port DMIC0 widget (0x11)			
ConL4	7:0	R	0Fh	N/A (Hard-coded)
	Port F Pin widget (0x0F)			

6.19.3. ADC0Mux (NID = 17h): ConLstEntry0

Reg	Byte 4 (Bits 31:24)	Byte 3 (Bits 23:16)	Byte 2 (Bits 15:8)	Byte 1 (Bits 7:0)
Set				
Get	F0200h			

Field Name	Bits	R/W	Default	Reset
ConL3	31:24	R	0Ch	N/A (Hard-coded)
	Port C Pin widget (0x0C)			
ConL2	23:16	R	0Bh	N/A (Hard-coded)
	Port B Pin widget (0x0B			
ConL1	15:8	R	0Ah	N/A (Hard-coded)
	Port A Pin widget (0x0A)			
ConL0	7:0	R	1Bh	N/A (Hard-coded)
	Mixer Summing widget (0x1B)			

6.19.4. ADC0Mux (NID = 17h): OutAmpCap

Reg	Byte 4 (Bits 31:24)	Byte 3 (Bits 23:16)	Byte 2 (Bits 15:8)	Byte 1 (Bits 7:0)
Set				
Get	F0012h			

©2014 TEMPO SEMICONDCUTOR, INC..

Field Name	Bits	R/W	Default	Reset
Mute	31	R	1h	N/A (Hard-coded)
	Mute support: 1 = yes, 0 = no.			
Rsvd3	30:23	R	00h	N/A (Hard-coded)
	Reserved.			
StepSize	22:16	R	03h	N/A (Hard-coded)
	Size of each step in the gain range: 0 to 127 = .25dB to 32dB, in .25dB steps.			
Rsvd2	15	R	0h	N/A (Hard-coded)
	Reserved.			
NumSteps	14:8	R	2Eh	N/A (Hard-coded)
	Number of gains steps (number of possible settings - 1).			
Rsvd1	7	R	0h	N/A (Hard-coded)
	Reserved.			
Offset	6:0	R	10h	N/A (Hard-coded)
	Indicates which step is 0dB			

6.19.5. ADC0Mux (NID = 17h): OutAmpLeft

Reg	Byte 4 (Bits 31:24)	Byte 3 (Bits 23:16)	Byte 2 (Bits 15:8)	Byte 1 (Bits 7:0)
Set				3A0h
Get	BA000h			

Field Name	Bits	R/W	Default	Reset
Rsvd2	31:8	R	000000h	N/A (Hard-coded)
	Reserved.			
Mute	7	RW	1h	POR - DAFG - ULR
	Amp mute: 1 = muted, 0 = not muted.			
Rsvd1	6	R	0h	N/A (Hard-coded)
	Reserved.			

©2014 TEMPO SEMICONDCUTOR, INC..

Field Name	Bits	R/W	Default	Reset
Gain	5:0	RW	10h	POR - DAFG - ULR
	Amp gain step number (see OutAmpCap parameter pertaining to this widget).			

6.19.6. ADC0Mux (NID = 17h): OutAmpRight

Reg	Byte 4 (Bits 31:24)	Byte 3 (Bits 23:16)	Byte 2 (Bits 15:8)	Byte 1 (Bits 7:0)
Set				390h
Get	B8000h			

Field Name	Bits	R/W	Default	Reset
Rsvd2	31:8	R	000000h	N/A (Hard-coded)
	Reserved.			
Mute	7	RW	1h	POR - DAFG - ULR
	Amp mute: 1 = muted, 0 = not muted.			
Rsvd1	6	R	0h	N/A (Hard-coded)
	Reserved.			
Gain	5:0	RW	10h	POR - DAFG - ULR
	Amp gain step number (see OutAmpCap parameter pertaining to this widget).			

6.19.7. ADC0Mux (NID = 17h): ConSelectCtrl

Reg	Byte 4 (Bits 31:24)	Byte 3 (Bits 23:16)	Byte 2 (Bits 15:8)	Byte 1 (Bits 7:0)
Set				701h
Get	F0100h			

Field Name	Bits	R/W	Default	Reset
Rsvd	31:3	R	00000000h	N/A (Hard-coded)
	Reserved.			
Index	2:0	RW	0h	POR - DAFG - ULR
	Connection select control index.			

©2014 TEMPO SEMICONDCUTOR, INC..

6.19.8. ADC0Mux (NID = 17h): PwrState

Reg	Byte 4 (Bits 31:24)	Byte 3 (Bits 23:16)	Byte 2 (Bits 15:8)	Byte 1 (Bits 7:0)
Set				705h
Get	F0500h			

Field Name	Bits	R/W	Default	Reset
Rsvd4	31:11	R	000000h	N/A (Hard-coded)
	Reserved.			
SettingsReset	10	R	1h	POR - DAFG - ULR
	Indicates if any persistent settings in this Widget have been reset. Cleared by PwrState 'Get', or a 'Set' to any Verb in this Widget.			
Rsvd3	9	R	0h	N/A (Hard-coded)
	Reserved.			
Error	8	R	0h	POR - DAFG - ULR
	Error indicator: 1 = cannot enter requested power state, 0 = no problem with requested power state.			
Rsvd2	7:6	R	0h	N/A (Hard-coded)
	Reserved.			
Act	5:4	R	3h	POR - DAFG - LR
	Actual power state of this widget.			
Rsvd1	3:2	R	0h	N/A (Hard-coded)
	Reserved.			
Set	1:0	RW	0h	POR - DAFG - LR
	Current power state setting for this widget.			

6.19.9. ADC0Mux (NID = 17h): EAPDBTLLR

Reg	Byte 4 (Bits 31:24)	Byte 3 (Bits 23:16)	Byte 2 (Bits 15:8)	Byte 1 (Bits 7:0)
Set				70Ch
Get	F0C00h			

©2014 TEMPO SEMICONDCUTOR, INC..

Field Name	Bits	R/W	Default	Reset
Rsvd2	31:3	R	00000000h	N/A (Hard-coded)
	Reserved.			
SwapEn	2	RW	0h	POR - DAFG - ULR
	Swap enable: 1 = L/R swap enabled, 0 = L/R swap disabled.			
Rsvd1	1:0	R	0h	N/A (Hard-coded)
	Reserved.			

6.20. ADC1Mux (NID = 18h): WCap

Reg	Byte 4 (Bits 31:24)	Byte 3 (Bits 23:16)	Byte 2 (Bits 15:8)	Byte 1 (Bits 7:0)
Set				
Get	F0009h			

Field Name	Bits	R/W	Default	Reset
Rsvd2	31:24	R	00h	N/A (Hard-coded)
	Reserved.			
Type	23:20	R	3h	N/A (Hard-coded)
	Widget type: 0h = Out Converter 1h = In Converter 2h = Summing (Mixer) 3h = Selector (Mux) 4h = Pin Complex 5h = Power 6h = Volume Knob 7h = Beep Generator 8h-Eh = Reserved Fh = Vendor Defined			
Delay	19:16	R	0h	N/A (Hard-coded)
	Number of sample delays through widget.			
Rsvd1	15:12	R	0h	N/A (Hard-coded)
	Reserved.			

©2014 TEMPO SEMICONDCUTOR, INC..

Field Name	Bits	R/W	Default	Reset
SwapCap	11	R	1h	N/A (Hard-coded)
	Left/right swap support: 1 = yes, 0 = no.			
PwrCntrl	10	R	1h	N/A (Hard-coded)
	Power state support: 1 = yes, 0 = no.			
DigitalStrm	9	R	0h	N/A (Hard-coded)
	Digital stream support: 1 = yes (digital), 0 = no (analog).			
ConnList	8	R	1h	N/A (Hard-coded)
	Connection list present: 1 = yes, 0 = no.			
UnsolCap	7	R	0h	N/A (Hard-coded)
	Unsolicited response support: 1 = yes, 0 = no.			
ProcWidget	6	R	0h	N/A (Hard-coded)
	Processing state support: 1 = yes, 0 = no.			
Stripe	5	R	0h	N/A (Hard-coded)
	Striping support: 1 = yes, 0 = no.			
FormatOvrd	4	R	0h	N/A (Hard-coded)
	Stream format override: 1 = yes, 0 = no.			
AmpParamOvrd	3	R	1h	N/A (Hard-coded)
	Amplifier capabilities override: 1 = yes, no.			
OutAmpPrsnt	2	R	1h	N/A (Hard-coded)
	Output amp present: 1 = yes, 0 = no.			
InAmpPrsnt	1	R	0h	N/A (Hard-coded)
	Input amp present: 1 = yes, 0 = no.			
Stereo	0	R	1h	N/A (Hard-coded)
	Stereo stream support: 1 = yes (stereo), 0 = no (mono).			

6.20.1. ADC1Mux (NID = 18h): ConLst

Reg	Byte 4 (Bits 31:24)	Byte 3 (Bits 23:16)	Byte 2 (Bits 15:8)	Byte 1 (Bits 7:0)
Set				
Get	F000Eh			

©2014 TEMPO SEMICONDCUTOR, INC..

Field Name	Bits	R/W	Default	Reset
Rsvd	31:8	R	000000h	N/A (Hard-coded)
	Reserved.			
LForm	7	R	0h	N/A (Hard-coded)
	Connection list format: 1 = long-form (15-bit) NID entries, 0 = short-form (7-bit) NID entries.			
ConL	6:0	R	08h	N/A (Hard-coded)
	Number of NID entries in connection list.			

6.20.2. ADC1Mux (NID = 18h): ConLstEntry4

Reg	Byte 4 (Bits 31:24)	Byte 3 (Bits 23:16)	Byte 2 (Bits 15:8)	Byte 1 (Bits 7:0)
Set				
Get	F0204h			

Field Name	Bits	R/W	Default	Reset
ConL7	31:24	R	0Eh	N/A (Hard-coded)
	Port E Pin widget (0x0E) (Available only on 48-pin versions).			
ConL6	23:16	R	12h	N/A (Hard-coded)
	Port DMIC1 widget (0x12).			
ConL5	15:8	R	11h	N/A (Hard-coded)
	Port DMIC0 widget (0x11)			
ConL4	7:0	R	0Fh	N/A (Hard-coded)
	Port F Pin widget (0x0F)			

6.20.3. ADC1Mux (NID = 18h): ConLstEntry0

Reg	Byte 4 (Bits 31:24)	Byte 3 (Bits 23:16)	Byte 2 (Bits 15:8)	Byte 1 (Bits 7:0)
Set				
Get	F0200h			

©2014 TEMPO SEMICONDCUTOR, INC..

Field Name	Bits	R/W	Default	Reset
ConL3	31:24	R	0Ch	N/A (Hard-coded)
	Port C Pin widget (0x0C)			
ConL2	23:16	R	0Bh	N/A (Hard-coded)
	Port B Pin widget (0x0B)			
ConL1	15:8	R	0Ah	N/A (Hard-coded)
	Port A Pin widget (0x0A)			
ConL0	7:0	R	1Bh	N/A (Hard-coded)
	Mixer Summing widget (0x1B)			

6.20.4. ADC1Mux (NID = 18h): OutAmpCap

Reg	Byte 4 (Bits 31:24)	Byte 3 (Bits 23:16)	Byte 2 (Bits 15:8)	Byte 1 (Bits 7:0)
Set				
Get	F0012h			

Field Name	Bits	R/W	Default	Reset
Mute	31	R	1h	N/A (Hard-coded)
	Mute support: 1 = yes, 0 = no.			
Rsvd3	30:23	R	00h	N/A (Hard-coded)
	Reserved.			
StepSize	22:16	R	03h	N/A (Hard-coded)
	Size of each step in the gain range: 0 to 127 = .25dB to 32dB, in .25dB steps.			
Rsvd2	15	R	0h	N/A (Hard-coded)
	Reserved.			
NumSteps	14:8	R	2Eh	N/A (Hard-coded)
	Number of gains steps (number of possible settings - 1).			
Rsvd1	7	R	0h	N/A (Hard-coded)
	Reserved.			

©2014 TEMPO SEMICONDCUTOR, INC..

Field Name	Bits	R/W	Default	Reset
Offset	6:0	R	10h	N/A (Hard-coded)
	Indicates which step is 0dB			

6.20.5. ADC1Mux (NID = 18h): OutAmpLeft

Reg	Byte 4 (Bits 31:24)	Byte 3 (Bits 23:16)	Byte 2 (Bits 15:8)	Byte 1 (Bits 7:0)
Set				3A0h
Get	BA000h			

Field Name	Bits	R/W	Default	Reset
Rsvd2	31:8	R	000000h	N/A (Hard-coded)
	Reserved.			
Mute	7	RW	1h	POR - DAFG - ULR
	Amp mute: 1 = muted, 0 = not muted.			
Rsvd1	6	R	0h	N/A (Hard-coded)
	Reserved.			
Gain	5:0	RW	10h	POR - DAFG - ULR
	Amp gain step number (see OutAmpCap parameter pertaining to this widget).			

6.20.6. ADC1Mux (NID = 18h): OutAmpRight

Reg	Byte 4 (Bits 31:24)	Byte 3 (Bits 23:16)	Byte 2 (Bits 15:8)	Byte 1 (Bits 7:0)
Set				390h
Get	B8000h			

Field Name	Bits	R/W	Default	Reset
Rsvd2	31:8	R	000000h	N/A (Hard-coded)
	Reserved.			
Mute	7	RW	1h	POR - DAFG - ULR
	Amp mute: 1 = muted, 0 = not muted.			

©2014 TEMPO SEMICONDCUTOR, INC..

Field Name	Bits	R/W	Default	Reset
Rsvd1	6	R	0h	N/A (Hard-coded)
	Reserved.			
Gain	5:0	RW	10h	POR - DAFG - ULR
	Amp gain step number (see OutAmpCap parameter pertaining to this widget).			

6.20.7. ADC1Mux (NID = 18h): ConSelectCtrl

Reg	Byte 4 (Bits 31:24)	Byte 3 (Bits 23:16)	Byte 2 (Bits 15:8)	Byte 1 (Bits 7:0)
Set				701h
Get	F0100h			

Field Name	Bits	R/W	Default	Reset
Rsvd	31:3	R	00000000h	N/A (Hard-coded)
	Reserved.			
Index	2:0	RW	0h	POR - DAFG - ULR
	Connection select control index.			

6.20.8. ADC1Mux (NID = 18h): PwrState

Reg	Byte 4 (Bits 31:24)	Byte 3 (Bits 23:16)	Byte 2 (Bits 15:8)	Byte 1 (Bits 7:0)
Set				705h
Get	F0500h			

Field Name	Bits	R/W	Default	Reset
Rsvd4	31:11	R	000000h	N/A (Hard-coded)
	Reserved.			
SettingsReset	10	R	1h	POR - DAFG - ULR
	Indicates if any persistent settings in this Widget have been reset. Cleared by PwrState 'Get', or a 'Set' to any Verb in this Widget.			
Rsvd3	9	R	0h	N/A (Hard-coded)
	Reserved.			

©2014 TEMPO SEMICONDCUTOR, INC..

Field Name	Bits	R/W	Default	Reset
Error	8	R	0h	POR - DAFG - ULR
	Error indicator: 1 = cannot enter requested power state, 0 = no problem with requested power state.			
Rsvd2	7:6	R	0h	N/A (Hard-coded)
	Reserved.			
Act	5:4	R	3h	POR - DAFG - LR
	Actual power state of this widget.			
Rsvd1	3:2	R	0h	N/A (Hard-coded)
	Reserved.			
Set	1:0	RW	0h	POR - DAFG - LR
	Current power state setting for this widget.			

6.20.9. ADC1Mux (NID = 18h): EAPDBTLLR

Reg	Byte 4 (Bits 31:24)	Byte 3 (Bits 23:16)	Byte 2 (Bits 15:8)	Byte 1 (Bits 7:0)
Set				70Ch
Get	F0C00h			

Field Name	Bits	R/W	Default	Reset
Rsvd2	31:3	R	00000000h	N/A (Hard-coded)
	Reserved.			
SwapEn	2	RW	0h	POR - DAFG - ULR
	Swap enable: 1 = L/R swap enabled, 0 = L/R swap disabled.			
Rsvd1	1:0	R	0h	N/A (Hard-coded)
	Reserved.			

6.21. MonoMux (NID = 19h): WCap (Available only on 48-pin versions)

Reg	Byte 4 (Bits 31:24)	Byte 3 (Bits 23:16)	Byte 2 (Bits 15:8)	Byte 1 (Bits 7:0)
Set				
Get	F0009h			

©2014 TEMPO SEMICONDCUTOR, INC..

Field Name	Bits	R/W	Default	Reset
Rsvd2	31:24	R	00h	N/A (Hard-coded)
	Reserved.			
Type	23:20	R	3h	N/A (Hard-coded)
	Widget type: 0h = Out Converter 1h = In Converter 2h = Summing (Mixer) 3h = Selector (Mux) 4h = Pin Complex 5h = Power 6h = Volume Knob 7h = Beep Generator 8h-Eh = Reserved Fh = Vendor Defined			
Delay	19:16	R	0h	N/A (Hard-coded)
	Number of sample delays through widget.			
Rsvd1	15:12	R	0h	N/A (Hard-coded)
	Reserved.			
SwapCap	11	R	0h	N/A (Hard-coded)
	Left/right swap support: 1 = yes, 0 = no.			
PwrCntrl	10	R	1h	N/A (Hard-coded)
	Power state support: 1 = yes, 0 = no.			
Dig	9	R	0h	N/A (Hard-coded)
	Digital stream support: 1 = yes (digital), 0 = no (analog).			
ConnList	8	R	1h	N/A (Hard-coded)
	Connection list present: 1 = yes, 0 = no.			
UnSolCap	7	R	0h	N/A (Hard-coded)
	Unsolicited response support: 1 = yes, 0 = no.			
ProcWidget	6	R	0h	N/A (Hard-coded)
	Processing state support: 1 = yes, 0 = no.			
Stripe	5	R	0h	N/A (Hard-coded)
	Striping support: 1 = yes, 0 = no.			

©2014 TEMPO SEMICONDCUTOR, INC..

Field Name	Bits	R/W	Default	Reset
FormatOvrd	4	R	0h	N/A (Hard-coded)
	Stream format override: 1 = yes, 0 = no.			
AmpParOvrd	3	R	0h	N/A (Hard-coded)
	Amplifier capabilities override: 1 = yes, no.			
OutAmpPrsnt	2	R	0h	N/A (Hard-coded)
	Output amp present: 1 = yes, 0 = no.			
InAmpPrsnt	1	R	0h	N/A (Hard-coded)
	Input amp present: 1 = yes, 0 = no.			
Stereo	0	R	1h	N/A (Hard-coded)
	Stereo stream support: 1 = yes (stereo), 0 = no (mono).			

6.21.1. MonoMux (NID = 19h): ConLst (Available only on 48-pin versions)

Reg	Byte 4 (Bits 31:24)	Byte 3 (Bits 23:16)	Byte 2 (Bits 15:8)	Byte 1 (Bits 7:0)
Set				
Get	F000Eh			

Field Name	Bits	R/W	Default	Reset
Rsvd	31:8	R	000000h	N/A (Hard-coded)
	Reserved.			
LForm	7	R	0h	N/A (Hard-coded)
	Connection list format: 1 = long-form (15-bit) NID entries, 0 = short-form (7-bit) NID entries.			
ConL	6:0	R	04h	N/A (Hard-coded)
	Number of NID entries in connection list.			

6.21.2. MonoMux (NID = 19h): ConLstEntry0 (Available only on 48-pin versions)

Reg	Byte 4 (Bits 31:24)	Byte 3 (Bits 23:16)	Byte 2 (Bits 15:8)	Byte 1 (Bits 7:0)
Set				
Get	F0200h			

©2014 TEMPO SEMICONDCUTOR, INC..

Field Name	Bits	R/W	Default	Reset
ConL3	31:24	R	23h	N/A (Hard-coded)
	DAC2 Converter widget (0x23) on 92HD66C. 92HD66B this is reserved			
ConL2	23:16	R	1Ch	N/A (Hard-coded)
	MixerOutVol Selector widget (0x1C)			
ConL1	15:8	R	14h	N/A (Hard-coded)
	DAC1 Converter widget (0x14)			
ConL0	7:0	R	13h	N/A (Hard-coded)
	DAC0 Converter widget (0x13)			

6.21.3. MonoMux (NID = 19h): ConSelectCtrl (Available only on 48-pin versions)

Reg	Byte 4 (Bits 31:24)	Byte 3 (Bits 23:16)	Byte 2 (Bits 15:8)	Byte 1 (Bits 7:0)
Set				701h
Get	F0100h			

Field Name	Bits	R/W	Default	Reset
Rsvd	31:2	R	0000000h	N/A (Hard-coded)
	Reserved.			
Index	1:0	RW	0h	POR - DAFG - ULR
	Connection select control index.			

6.21.4. MonoMux (NID = 19h): PwrState (Available only on 48-pin versions)

Reg	Byte 4 (Bits 31:24)	Byte 3 (Bits 23:16)	Byte 2 (Bits 15:8)	Byte 1 (Bits 7:0)
Set				705h
Get	F0500h			

©2014 TEMPO SEMICONDCUTOR, INC..

Field Name	Bits	R/W	Default	Reset
Rsvd4	31:11	R	000000h	N/A (Hard-coded)
	Reserved.			
SettingsReset	10	R	1h	POR - DAFG - ULR
	Indicates if any persistent settings in this Widget have been reset. Cleared by PwrState 'Get', or a 'Set' to any Verb in this Widget.			
Rsvd3	9	R	0h	N/A (Hard-coded)
	Reserved.			
Error	8	R	0h	POR - DAFG - ULR
	Error indicator: 1 = cannot enter requested power state, 0 = no problem with requested power state.			
Rsvd2	7:6	R	0h	N/A (Hard-coded)
	Reserved.			
Act	5:4	R	3h	POR - DAFG - LR
	Actual power state of this widget.			
Rsvd1	3:2	R	0h	N/A (Hard-coded)
	Reserved.			
Set	1:0	RW	0h	POR - DAFG - LR
	Current power state setting for this widget.			

6.22. MonoMix (NID = 1Ah): WCap (Available only on 48-pin versions)

Reg	Byte 4 (Bits 31:24)	Byte 3 (Bits 23:16)	Byte 2 (Bits 15:8)	Byte 1 (Bits 7:0)
Set				
Get	F0009h			

Field Name	Bits	R/W	Default	Reset
Rsvd2	31:24	R	00h	N/A (Hard-coded)
	Reserved.			

©2014 TEMPO SEMICONDCUTOR, INC..

Field Name	Bits	R/W	Default	Reset
Type	23:20	R	2h	N/A (Hard-coded)
	Widget type: 0h = Out Converter 1h = In Converter 2h = Summing (Mixer) 3h = Selector (Mux) 4h = Pin Complex 5h = Power 6h = Volume Knob 7h = Beep Generator 8h-Eh = Reserved Fh = Vendor Defined			
Delay	19:16	R	0h	N/A (Hard-coded)
	Number of sample delays through widget.			
Rsvd1	15:12	R	0h	N/A (Hard-coded)
	Reserved.			
SwapCap	11	R	0h	N/A (Hard-coded)
	Left/right swap support: 1 = yes, 0 = no.			
PwrCntrl	10	R	1h	N/A (Hard-coded)
	Power state support: 1 = yes, 0 = no.			
Dig	9	R	0h	N/A (Hard-coded)
	Digital stream support: 1 = yes (digital), 0 = no (analog).			
ConnList	8	R	1h	N/A (Hard-coded)
	Connection list present: 1 = yes, 0 = no.			
UnSolCap	7	R	0h	N/A (Hard-coded)
	Unsolicited response support: 1 = yes, 0 = no.			
ProcWidget	6	R	0h	N/A (Hard-coded)
	Processing state support: 1 = yes, 0 = no.			
Stripe	5	R	0h	N/A (Hard-coded)
	Striping support: 1 = yes, 0 = no.			
FormatOvrd	4	R	0h	N/A (Hard-coded)
	Stream format override: 1 = yes, 0 = no.			

©2014 TEMPO SEMICONDCUTOR, INC..

Field Name	Bits	R/W	Default	Reset
AmpParOvrd	3	R	0h	N/A (Hard-coded)
	Amplifier capabilities override: 1 = yes, no.			
OutAmpPrsnt	2	R	0h	N/A (Hard-coded)
	Output amp present: 1 = yes, 0 = no.			
InAmpPrsnt	1	R	0h	N/A (Hard-coded)
	Input amp present: 1 = yes, 0 = no.			
Stereo	0	R	0h	N/A (Hard-coded)
	Stereo stream support: 1 = yes (stereo), 0 = no (mono).			

6.22.1. MonoMix (NID = 1Ah): ConLst (Available only on 48-pin versions)

Reg	Byte 4 (Bits 31:24)	Byte 3 (Bits 23:16)	Byte 2 (Bits 15:8)	Byte 1 (Bits 7:0)
Set				
Get	F000Eh			

Field Name	Bits	R/W	Default	Reset
Rsvd	31:8	R	000000h	N/A (Hard-coded)
	Reserved.			
LForm	7	R	0h	N/A (Hard-coded)
	Connection list format: 1 = long-form (15-bit) NID entries, 0 = short-form (7-bit) NID entries.			
ConL	6:0	R	01h	N/A (Hard-coded)
	Number of NID entries in connection list.			

6.22.2. MonoMix (NID = 1Ah): ConLstEntry0 (Available only on 48-pin versions)

Reg	Byte 4 (Bits 31:24)	Byte 3 (Bits 23:16)	Byte 2 (Bits 15:8)	Byte 1 (Bits 7:0)
Set				
Get	F0200h			

©2014 TEMPO SEMICONDCUTOR, INC..

Field Name	Bits	R/W	Default	Reset
ConL3	31:24	R	00h	N/A (Hard-coded)
	Unused list entry.			
ConL2	23:16	R	00h	N/A (Hard-coded)
	Unused list entry.			
ConL1	15:8	R	00h	N/A (Hard-coded)
	Unused list entry.			
ConL0	7:0	R	19h	N/A (Hard-coded)
	MonoMux Selector widget (0x19)			

6.22.3. MonoMix (NID = 1Ah): PwrState (Available only on 48-pin versions)

Reg	Byte 4 (Bits 31:24)	Byte 3 (Bits 23:16)	Byte 2 (Bits 15:8)	Byte 1 (Bits 7:0)
Set				705h
Get	F0500h			

Field Name	Bits	R/W	Default	Reset
Rsvd4	31:11	R	000000h	N/A (Hard-coded)
	Reserved.			
SettingsReset	10	R	1h	POR - DAFG - ULR
	Indicates if any persistent settings in this Widget have been reset. Cleared by PwrState 'Get', or a 'Set' to any Verb in this Widget.			
Rsvd3	9	R	0h	N/A (Hard-coded)
	Reserved.			
Error	8	R	0h	POR - DAFG - ULR
	Error indicator: 1 = cannot enter requested power state, 0 = no problem with requested power state.			
Rsvd2	7:6	R	0h	N/A (Hard-coded)
	Reserved.			
Act	5:4	R	3h	POR - DAFG - LR
	Actual power state of this widget.			

©2014 TEMPO SEMICONDCUTOR, INC..

Field Name	Bits	R/W	Default	Reset
Rsvd1	3:2	R	0h	N/A (Hard-coded)
	Reserved.			
Set	1:0	RW	0h	POR - DAFG - LR
	Current power state setting for this widget.			

6.23. Mixer (NID = 1Bh): WCap

Reg	Byte 4 (Bits 31:24)	Byte 3 (Bits 23:16)	Byte 2 (Bits 15:8)	Byte 1 (Bits 7:0)
Set				
Get	F0009h			

Field Name	Bits	R/W	Default	Reset
Rsvd2	31:24	R	00h	N/A (Hard-coded)
	Reserved.			
Type	23:20	R	2h	N/A (Hard-coded)
	Widget type: 0h = Out Converter 1h = In Converter 2h = Summing (Mixer) 3h = Selector (Mux) 4h = Pin Complex 5h = Power 6h = Volume Knob 7h = Beep Generator 8h-Eh = Reserved Fh = Vendor Defined			
Delay	19:16	R	0h	N/A (Hard-coded)
	Number of sample delays through widget.			
Rsvd1	15:12	R	0h	N/A (Hard-coded)
	Reserved.			
SwapCap	11	R	0h	N/A (Hard-coded)
	Left/right swap support: 1 = yes, 0 = no.			
PwrCntrl	10	R	1h	N/A (Hard-coded)
	Power state support: 1 = yes, 0 = no.			

©2014 TEMPO SEMICONDCUTOR, INC..

Field Name	Bits	R/W	Default	Reset
Dig	9	R	0h	N/A (Hard-coded)
	Digital stream support: 1 = yes (digital), 0 = no (analog).			
ConnList	8	R	1h	N/A (Hard-coded)
	Connection list present: 1 = yes, 0 = no.			
UnSolCap	7	R	0h	N/A (Hard-coded)
	Unsolicited response support: 1 = yes, 0 = no.			
ProcWidget	6	R	0h	N/A (Hard-coded)
	Processing state support: 1 = yes, 0 = no.			
Stripe	5	R	0h	N/A (Hard-coded)
	Striping support: 1 = yes, 0 = no.			
FormatOvrd	4	R	0h	N/A (Hard-coded)
	Stream format override: 1 = yes, 0 = no.			
AmpParOvrd	3	R	1h	N/A (Hard-coded)
	Amplifier capabilities override: 1 = yes, no.			
OutAmpPrsnt	2	R	0h	N/A (Hard-coded)
	Output amp present: 1 = yes, 0 = no.			
InAmpPrsnt	1	R	1h	N/A (Hard-coded)
	Input amp present: 1 = yes, 0 = no.			
Stereo	0	R	1h	N/A (Hard-coded)
	Stereo stream support: 1 = yes (stereo), 0 = no (mono).			

6.23.1. Mixer (NID = 1Bh): InAmpCap

Reg	Byte 4 (Bits 31:24)	Byte 3 (Bits 23:16)	Byte 2 (Bits 15:8)	Byte 1 (Bits 7:0)
Set				
Get	F000Dh			

©2014 TEMPO SEMICONDCUTOR, INC..

Field Name	Bits	R/W	Default	Reset
Mute	31	R	1h	N/A (Hard-coded)
	Mute support: 1 = yes, 0 = no.			
Rsvd3	30:23	R	00h	N/A (Hard-coded)
	Reserved.			
StepSize	22:16	R	05h	N/A (Hard-coded)
	Size of each step in the gain range: 0 to 127 = .25dB to 32dB, in .25dB steps.			
Rsvd2	15	R	0h	N/A (Hard-coded)
	Reserved.			
NumSteps	14:8	R	1Fh	N/A (Hard-coded)
	Number of gains steps (number of possible settings - 1).			
Rsvd1	7	R	0h	N/A (Hard-coded)
	Reserved.			
Offset	6:0	R	17h	N/A (Hard-coded)
	Indicates which step is 0dB			

6.23.2. Mixer (NID = 1Bh): ConLst

Reg	Byte 4 (Bits 31:24)	Byte 3 (Bits 23:16)	Byte 2 (Bits 15:8)	Byte 1 (Bits 7:0)
Set				
Get	F000Eh			

Field Name	Bits	R/W	Default	Reset
Rsvd	31:8	R	000000h	N/A (Hard-coded)
	Reserved.			
LForm	7	R	0h	N/A (Hard-coded)
	Connection list format: 1 = long-form (15-bit) NID entries, 0 = short-form (7-bit) NID entries.			
ConL	6:0	R	08h	N/A (Hard-coded)
	Number of NID entries in connection list.			

©2014 TEMPO SEMICONDCUTOR, INC..

6.23.3. Mixer (NID = 1Bh): ConLstEntry4

Reg	Byte 4 (Bits 31:24)	Byte 3 (Bits 23:16)	Byte 2 (Bits 15:8)	Byte 1 (Bits 7:0)
Set				
Get	F0204h			

Field Name	Bits	R/W	Default	Reset
ConL7	31:24	R	23h	N/A (Hard-coded)
	DAC2 widget (0x23) on 92HD66C. 92HD66B this is reserved. Uses InAmpLeft7/InAmpRight7 controls			
ConL6	23:16	R	0Eh	N/A (Hard-coded)
	Port E Pin widget (0x0E). Uses InAmpLeft6/InAmpRight6 controls (Available only on 48-pin versions)			
ConL5	15:8	R	0Fh	N/A (Hard-coded)
	Port F Pin widget (0x0F). Uses InAmpLeft5/InAmpRight5 controls			
ConL4	7:0	R	0Ch	N/A (Hard-coded)
	Port C Pin widget (0x0C). Uses InAmpLeft4/InAmpRight4 controls			

6.23.4. Mixer (NID = 1Bh): ConLstEntry0

Reg	Byte 4 (Bits 31:24)	Byte 3 (Bits 23:16)	Byte 2 (Bits 15:8)	Byte 1 (Bits 7:0)
Set				
Get	F0200h			

Field Name	Bits	R/W	Default	Reset
ConL3	31:24	R	0Bh	N/A (Hard-coded)
	Port B Pin widget (0x0B). Uses InAmpLeft3/InAmpRight3 controls.			
ConL2	23:16	R	0Ah	N/A (Hard-coded)
	Port A Pin widget (0x0A). Uses InAmpLeft2/InAmpRight2 controls.			
ConL1	15:8	R	14h	N/A (Hard-coded)
	DAC1 widget (0x14). Uses InAmpLeft1/InAmpRight1 controls.			

©2014 TEMPO SEMICONDCUTOR, INC..

Field Name	Bits	R/W	Default	Reset
ConL0	7:0	R	13h	N/A (Hard-coded)
	DAC0 widget (0x13). Uses InAmpLeft0/InAmpRight0 controls.			

6.23.5. Mixer (NID = 1Bh): InAmpLeft0

Reg	Byte 4 (Bits 31:24)	Byte 3 (Bits 23:16)	Byte 2 (Bits 15:8)	Byte 1 (Bits 7:0)
Set				360h
Get	B2000h			

Field Name	Bits	R/W	Default	Reset
Rsvd2	31:8	R	000000h	N/A (Hard-coded)
	Reserved.			
Mute	7	RW	1h	POR - DAFG - ULR
	Amp mute: 1 = muted, 0 = not muted.			
Rsvd1	6:5	R	0h	N/A (Hard-coded)
	Reserved.			
Gain	4:0	RW	17h	POR - DAFG - ULR
	Amp gain step number (see InAmpCap parameter pertaining to this widget).			

6.23.6. Mixer (NID = 1Bh): InAmpRight0

Reg	Byte 4 (Bits 31:24)	Byte 3 (Bits 23:16)	Byte 2 (Bits 15:8)	Byte 1 (Bits 7:0)
Set				350h
Get	B0000h			

Field Name	Bits	R/W	Default	Reset
Rsvd2	31:8	R	000000h	N/A (Hard-coded)
	Reserved.			
Mute	7	RW	1h	POR - DAFG - ULR
	Amp mute: 1 = muted, 0 = not muted.			

©2014 TEMPO SEMICONDCUTOR, INC..

Field Name	Bits	R/W	Default	Reset
Rsvd1	6:5	R	0h	N/A (Hard-coded)
	Reserved.			
Gain	4:0	RW	17h	POR - DAFG - ULR
	Amp gain step number (see InAmpCap parameter pertaining to this widget).			

6.23.7. Mixer (NID = 1Bh): InAmpLeft1

Reg	Byte 4 (Bits 31:24)	Byte 3 (Bits 23:16)	Byte 2 (Bits 15:8)	Byte 1 (Bits 7:0)
Set				361h
Get	B2001h			

Field Name	Bits	R/W	Default	Reset
Rsvd2	31:8	R	000000h	N/A (Hard-coded)
	Reserved.			
Mute	7	RW	1h	POR - DAFG - ULR
	Amp mute: 1 = muted, 0 = not muted.			
Rsvd1	6:5	R	0h	N/A (Hard-coded)
	Reserved.			
Gain	4:0	RW	17h	POR - DAFG - ULR
	Amp gain step number (see InAmpCap parameter pertaining to this widget).			

6.23.8. Mixer (NID = 1Bh): InAmpRight1

Reg	Byte 4 (Bits 31:24)	Byte 3 (Bits 23:16)	Byte 2 (Bits 15:8)	Byte 1 (Bits 7:0)
Set				351h
Get	B0001h			

Field Name	Bits	R/W	Default	Reset
Rsvd2	31:8	R	000000h	N/A (Hard-coded)
	Reserved.			

©2014 TEMPO SEMICONDCUTOR, INC..

Field Name	Bits	R/W	Default	Reset
Mute	7	RW	1h	POR - DAFG - ULR
	Amp mute: 1 = muted, 0 = not muted.			
Rsvd1	6:5	R	0h	N/A (Hard-coded)
	Reserved.			
Gain	4:0	RW	17h	POR - DAFG - ULR
	Amp gain step number (see InAmpCap parameter pertaining to this widget).			

6.23.9. Mixer (NID = 1Bh): InAmpLeft2

Reg	Byte 4 (Bits 31:24)	Byte 3 (Bits 23:16)	Byte 2 (Bits 15:8)	Byte 1 (Bits 7:0)
Set				362h
Get	B2002h			

Field Name	Bits	R/W	Default	Reset
Rsvd2	31:8	R	000000h	N/A (Hard-coded)
	Reserved.			
Mute	7	RW	1h	POR - DAFG - ULR
	Amp mute: 1 = muted, 0 = not muted.			
Rsvd1	6:5	R	0h	N/A (Hard-coded)
	Reserved.			
Gain	4:0	RW	17h	POR - DAFG - ULR
	Amp gain step number (see InAmpCap parameter pertaining to this widget).			

6.23.10. Mixer (NID = 1Bh): InAmpRight2

Reg	Byte 4 (Bits 31:24)	Byte 3 (Bits 23:16)	Byte 2 (Bits 15:8)	Byte 1 (Bits 7:0)
Set				352h
Get	B0002h			

©2014 TEMPO SEMICONDCUTOR, INC..

Field Name	Bits	R/W	Default	Reset
Rsvd2	31:8	R	000000h	N/A (Hard-coded)
	Reserved.			
Mute	7	RW	1h	POR - DAFG - ULR
	Amp mute: 1 = muted, 0 = not muted.			
Rsvd1	6:5	R	0h	N/A (Hard-coded)
	Reserved.			
Gain	4:0	RW	17h	POR - DAFG - ULR
	Amp gain step number (see InAmpCap parameter pertaining to this widget).			

6.23.11. Mixer (NID = 1Bh): InAmpLeft3

Reg	Byte 4 (Bits 31:24)	Byte 3 (Bits 23:16)	Byte 2 (Bits 15:8)	Byte 1 (Bits 7:0)
Set				363h
Get	B2003h			

Field Name	Bits	R/W	Default	Reset
Rsvd2	31:8	R	000000h	N/A (Hard-coded)
	Reserved.			
Mute	7	RW	1h	POR - DAFG - ULR
	Amp mute: 1 = muted, 0 = not muted.			
Rsvd1	6:5	R	0h	N/A (Hard-coded)
	Reserved.			
Gain	4:0	RW	17h	POR - DAFG - ULR
	Amp gain step number (see InAmpCap parameter pertaining to this widget).			

6.23.12. Mixer (NID = 1Bh): InAmpRight3

Reg	Byte 4 (Bits 31:24)	Byte 3 (Bits 23:16)	Byte 2 (Bits 15:8)	Byte 1 (Bits 7:0)
Set				353h
Get	B0003h			

©2014 TEMPO SEMICONDCUTOR, INC..

Field Name	Bits	R/W	Default	Reset
Rsvd2	31:8	R	000000h	N/A (Hard-coded)
	Reserved.			
Mute	7	RW	1h	POR - DAFG - ULR
	Amp mute: 1 = muted, 0 = not muted.			
Rsvd1	6:5	R	0h	N/A (Hard-coded)
	Reserved.			
Gain	4:0	RW	17h	POR - DAFG - ULR
	Amp gain step number (see InAmpCap parameter pertaining to this widget).			

6.23.13. Mixer (NID = 1Bh): InAmpLeft4

Reg	Byte 4 (Bits 31:24)	Byte 3 (Bits 23:16)	Byte 2 (Bits 15:8)	Byte 1 (Bits 7:0)
Set				364h
Get	B2004h			

Field Name	Bits	R/W	Default	Reset
Rsvd2	31:8	R	000000h	N/A (Hard-coded)
	Reserved.			
Mute	7	RW	1h	POR - DAFG - ULR
	Amp mute: 1 = muted, 0 = not muted.			
Rsvd1	6:5	R	0h	N/A (Hard-coded)
	Reserved.			
Gain	4:0	RW	17h	POR - DAFG - ULR
	Amp gain step number (see InAmpCap parameter pertaining to this widget).			

6.23.14. Mixer (NID = 1Bh): InAmpRight4

Reg	Byte 4 (Bits 31:24)	Byte 3 (Bits 23:16)	Byte 2 (Bits 15:8)	Byte 1 (Bits 7:0)
Set				354h
Get	B0004h			

©2014 TEMPO SEMICONDCUTOR, INC..

Field Name	Bits	R/W	Default	Reset
Rsvd2	31:8	R	000000h	N/A (Hard-coded)
	Reserved.			
Mute	7	RW	1h	POR - DAFG - ULR
	Amp mute: 1 = muted, 0 = not muted.			
Rsvd1	6:5	R	0h	N/A (Hard-coded)
	Reserved.			
Gain	4:0	RW	17h	POR - DAFG - ULR
	Amp gain step number (see InAmpCap parameter pertaining to this widget).			

6.23.15. Mixer (NID = 1Bh): InAmpLeft5

Reg	Byte 4 (Bits 31:24)	Byte 3 (Bits 23:16)	Byte 2 (Bits 15:8)	Byte 1 (Bits 7:0)
Set				365h
Get	B2005h			

Field Name	Bits	R/W	Default	Reset
Rsvd2	31:8	R	000000h	N/A (Hard-coded)
	Reserved.			
Mute	7	RW	1h	POR - DAFG - ULR
	Amp mute: 1 = muted, 0 = not muted.			
Rsvd1	6:5	R	0h	N/A (Hard-coded)
	Reserved.			
Gain	4:0	RW	17h	POR - DAFG - ULR
	Amp gain step number (see InAmpCap parameter pertaining to this widget).			

6.23.16. Mixer (NID = 1Bh): InAmpRight5

Reg	Byte 4 (Bits 31:24)	Byte 3 (Bits 23:16)	Byte 2 (Bits 15:8)	Byte 1 (Bits 7:0)
Set				355h
Get	B0005h			

©2014 TEMPO SEMICONDCUTOR, INC..

Field Name	Bits	R/W	Default	Reset
Rsvd2	31:8	R	000000h	N/A (Hard-coded)
	Reserved.			
Mute	7	RW	1h	POR - DAFG - ULR
	Amp mute: 1 = muted, 0 = not muted.			
Rsvd1	6:5	R	0h	N/A (Hard-coded)
	Reserved.			
Gain	4:0	RW	17h	POR - DAFG - ULR
	Amp gain step number (see InAmpCap parameter pertaining to this widget).			

6.23.17. Mixer (NID = 1Bh): InAmpLeft6

Reg	Byte 4 (Bits 31:24)	Byte 3 (Bits 23:16)	Byte 2 (Bits 15:8)	Byte 1 (Bits 7:0)
Set				366h
Get	B2006h			

Field Name	Bits	R/W	Default	Reset
Rsvd2	31:8	R	000000h	N/A (Hard-coded)
	Reserved.			
Mute	7	RW	1h	POR - DAFG - ULR
	Amp mute: 1 = muted, 0 = not muted.			
Rsvd1	6:5	R	0h	N/A (Hard-coded)
	Reserved.			
Gain	4:0	RW	17h	POR - DAFG - ULR
	Amp gain step number (see InAmpCap parameter pertaining to this widget).			

©2014 TEMPO SEMICONDCUTOR, INC..

6.23.18. Mixer (NID = 1Bh): InAmpRight6

Reg	Byte 4 (Bits 31:24)	Byte 3 (Bits 23:16)	Byte 2 (Bits 15:8)	Byte 1 (Bits 7:0)
Set				356h
Get	B0006h			

Field Name	Bits	R/W	Default	Reset
Rsvd2	31:8	R	000000h	N/A (Hard-coded)
	Reserved.			
Mute	7	RW	1h	POR - DAFG - ULR
	Amp mute: 1 = muted, 0 = not muted.			
Rsvd1	6:5	R	0h	N/A (Hard-coded)
	Reserved.			
Gain	4:0	RW	17h	POR - DAFG - ULR
	Amp gain step number (see InAmpCap parameter pertaining to this widget).			

6.23.19. Mixer (NID = 1Bh): InAmpLeft7

Reg	Byte 4 (Bits 31:24)	Byte 3 (Bits 23:16)	Byte 2 (Bits 15:8)	Byte 1 (Bits 7:0)
Set				367h
Get	B2007h			

Field Name	Bits	R/W	Default	Reset
Rsvd2	31:8	R	000000h	N/A (Hard-coded)
	Reserved.			
Mute	7	RW	1h	POR - DAFG - ULR
	Amp mute: 1 = muted, 0 = not muted.			
Rsvd1	6:5	R	0h	N/A (Hard-coded)
	Reserved.			
Gain	4:0	RW	17h	POR - DAFG - ULR
	Amp gain step number (see InAmpCap parameter pertaining to this widget).			

©2014 TEMPO SEMICONDCUTOR, INC..

6.23.20. Mixer (NID = 1Bh): InAmpRight7

Reg	Byte 4 (Bits 31:24)	Byte 3 (Bits 23:16)	Byte 2 (Bits 15:8)	Byte 1 (Bits 7:0)
Set				357h
Get	B0007h			

Field Name	Bits	R/W	Default	Reset
Rsvd2	31:8	R	000000h	N/A (Hard-coded)
	Reserved.			
Mute	7	RW	1h	POR - DAFG - ULR
	Amp mute: 1 = muted, 0 = not muted.			
Rsvd1	6:5	R	0h	N/A (Hard-coded)
	Reserved.			
Gain	4:0	RW	17h	POR - DAFG - ULR
	Amp gain step number (see InAmpCap parameter pertaining to this widget).			

6.23.21. Mixer (NID = 1Bh): PwrState

Reg	Byte 4 (Bits 31:24)	Byte 3 (Bits 23:16)	Byte 2 (Bits 15:8)	Byte 1 (Bits 7:0)
Set				705h
Get	F0500h			

Field Name	Bits	R/W	Default	Reset
Rsvd4	31:11	R	000000h	N/A (Hard-coded)
	Reserved.			
SettingsReset	10	R	1h	POR - DAFG - ULR
	Indicates if any persistent settings in this Widget have been reset. Cleared by PwrState 'Get', or a 'Set' to any Verb in this Widget.			
Rsvd3	9	R	0h	N/A (Hard-coded)
	Reserved.			
Error	8	R	0h	POR - DAFG - ULR
	Error indicator: 1 = cannot enter requested power state, 0 = no problem with requested power state.			

©2014 TEMPO SEMICONDCUTOR, INC..

Field Name	Bits	R/W	Default	Reset
Rsvd2	7:6	R	0h	N/A (Hard-coded)
	Reserved.			
Act	5:4	R	3h	POR - DAFG - LR
	Actual power state of this widget.			
Rsvd1	3:2	R	0h	N/A (Hard-coded)
	Reserved.			
Set	1:0	RW	0h	POR - DAFG - LR
	Current power state setting for this widget.			

6.24. MixerOutVol (NID = 1Ch): WCap

Reg	Byte 4 (Bits 31:24)	Byte 3 (Bits 23:16)	Byte 2 (Bits 15:8)	Byte 1 (Bits 7:0)
Set				
Get	F0009h			

Field Name	Bits	R/W	Default	Reset
Rsvd2	31:24	R	00h	N/A (Hard-coded)
	Reserved.			
Type	23:20	R	3h	N/A (Hard-coded)
	Widget type: 0h = Out Converter 1h = In Converter 2h = Summing (Mixer) 3h = Selector (Mux) 4h = Pin Complex 5h = Power 6h = Volume Knob 7h = Beep Generator 8h-Eh = Reserved Fh = Vendor Defined			
Delay	19:16	R	0h	N/A (Hard-coded)
	Number of sample delays through widget.			
Rsvd1	15:12	R	0h	N/A (Hard-coded)
	Reserved.			

©2014 TEMPO SEMICONDCUTOR, INC..

Field Name	Bits	R/W	Default	Reset
SwapCap	11	R	0h	N/A (Hard-coded)
	Left/right swap support: 1 = yes, 0 = no.			
PwrCntrl	10	R	1h	N/A (Hard-coded)
	Power state support: 1 = yes, 0 = no.			
Dig	9	R	0h	N/A (Hard-coded)
	Digital stream support: 1 = yes (digital), 0 = no (analog).			
ConnList	8	R	1h	N/A (Hard-coded)
	Connection list present: 1 = yes, 0 = no.			
UnSolCap	7	R	0h	N/A (Hard-coded)
	Unsolicited response support: 1 = yes, 0 = no.			
ProcWidget	6	R	0h	N/A (Hard-coded)
	Processing state support: 1 = yes, 0 = no.			
Stripe	5	R	0h	N/A (Hard-coded)
	Striping support: 1 = yes, 0 = no.			
FormatOvrd	4	R	0h	N/A (Hard-coded)
	Stream format override: 1 = yes, 0 = no.			
AmpParOvrd	3	R	1h	N/A (Hard-coded)
	Amplifier capabilities override: 1 = yes, no.			
OutAmpPrsnt	2	R	1h	N/A (Hard-coded)
	Output amp present: 1 = yes, 0 = no.			
InAmpPrsnt	1	R	0h	N/A (Hard-coded)
	Input amp present: 1 = yes, 0 = no.			
Stereo	0	R	1h	N/A (Hard-coded)
	Stereo stream support: 1 = yes (stereo), 0 = no (mono).			

6.24.1. MixerOutVol (NID = 1Ch): ConLst

Reg	Byte 4 (Bits 31:24)	Byte 3 (Bits 23:16)	Byte 2 (Bits 15:8)	Byte 1 (Bits 7:0)
Set				
Get	F000Eh			

©2014 TEMPO SEMICONDCUTOR, INC..

Field Name	Bits	R/W	Default	Reset
Rsvd	31:8	R	000000h	N/A (Hard-coded)
	Reserved.			
LForm	7	R	0h	N/A (Hard-coded)
	Connection list format: 1 = long-form (15-bit) NID entries, 0 = short-form (7-bit) NID entries.			
ConL	6:0	R	01h	N/A (Hard-coded)
	Number of NID entries in connection list.			

6.24.2. MixerOutVol (NID = 1Ch): ConLstEntry0

Reg	Byte 4 (Bits 31:24)	Byte 3 (Bits 23:16)	Byte 2 (Bits 15:8)	Byte 1 (Bits 7:0)
Set				
Get	F0200h			

Field Name	Bits	R/W	Default	Reset
ConL3	31:24	R	00h	N/A (Hard-coded)
	Unused list entry.			
ConL2	23:16	R	00h	N/A (Hard-coded)
	Unused list entry.			
ConL1	15:8	R	00h	N/A (Hard-coded)
	Unused list entry.			
ConL0	7:0	R	1Bh	N/A (Hard-coded)
	Mixer Summing widget (0x1B)			

6.24.3. MixerOutVol (NID = 1Ch): OutAmpCap

Reg	Byte 4 (Bits 31:24)	Byte 3 (Bits 23:16)	Byte 2 (Bits 15:8)	Byte 1 (Bits 7:0)
Set				
Get	F0012h			

©2014 TEMPO SEMICONDCUTOR, INC..

Field Name	Bits	R/W	Default	Reset
Mute	31	R	1h	N/A (Hard-coded)
	Mute support: 1 = yes, 0 = no.			
Rsvd3	30:23	R	00h	N/A (Hard-coded)
	Reserved.			
StepSize	22:16	R	05h	N/A (Hard-coded)
	Size of each step in the gain range: 0 to 127 = .25dB to 32dB, in .25dB steps.			
Rsvd2	15	R	0h	N/A (Hard-coded)
	Reserved.			
NumSteps	14:8	R	1Fh	N/A (Hard-coded)
	Number of gains steps (number of possible settings - 1).			
Rsvd1	7	R	0h	N/A (Hard-coded)
	Reserved.			
Offset	6:0	R	1Fh	N/A (Hard-coded)
	Indicates which step is 0dB			

6.24.4. MixerOutVol (NID = 1Ch): OutAmpLeft

Reg	Byte 4 (Bits 31:24)	Byte 3 (Bits 23:16)	Byte 2 (Bits 15:8)	Byte 1 (Bits 7:0)
Set				3A0h
Get	BA000h			

Field Name	Bits	R/W	Default	Reset
Rsvd2	31:8	R	000000h	N/A (Hard-coded)
	Reserved.			
Mute	7	RW	1h	POR - DAFG - ULR
	Amp mute: 1 = muted, 0 = not muted.			
Rsvd1	6:5	R	0h	N/A (Hard-coded)
	Reserved.			

©2014 TEMPO SEMICONDCUTOR, INC..

Field Name	Bits	R/W	Default	Reset
Gain	4:0	RW	1Fh	POR - DAFG - ULR
	Amp gain step number (see OutAmpCap parameter pertaining to this widget).			

6.24.5. MixerOutVol (NID = 1Ch): OutAmpRight

Reg	Byte 4 (Bits 31:24)	Byte 3 (Bits 23:16)	Byte 2 (Bits 15:8)	Byte 1 (Bits 7:0)
Set				390h
Get	B8000h			

Field Name	Bits	R/W	Default	Reset
Rsvd2	31:8	R	000000h	N/A (Hard-coded)
	Reserved.			
Mute	7	RW	1h	POR - DAFG - ULR
	Amp mute: 1 = muted, 0 = not muted.			
Rsvd1	6:5	R	0h	N/A (Hard-coded)
	Reserved.			
Gain	4:0	RW	1Fh	POR - DAFG - ULR
	Amp gain step number (see OutAmpCap parameter pertaining to this widget).			

6.24.6. MixerOutVol (NID = 1Ch): PwrState

Reg	Byte 4 (Bits 31:24)	Byte 3 (Bits 23:16)	Byte 2 (Bits 15:8)	Byte 1 (Bits 7:0)
Set				705h
Get	F0500h			

Field Name	Bits	R/W	Default	Reset
Rsvd4	31:11	R	000000h	N/A (Hard-coded)
	Reserved.			
SettingsReset	10	R	1h	POR - DAFG - ULR
	Indicates if any persistent settings in this Widget have been reset. Cleared by PwrState 'Get', or a 'Set' to any Verb in this Widget.			

©2014 TEMPO SEMICONDCUTOR, INC..

Field Name	Bits	R/W	Default	Reset
Rsvd3	9	R	0h	N/A (Hard-coded)
	Reserved.			
Error	8	R	0h	POR - DAFG - ULR
	Error indicator: 1 = cannot enter requested power state, 0 = no problem with requested power state.			
Rsvd2	7:6	R	0h	N/A (Hard-coded)
	Reserved.			
Act	5:4	R	3h	POR - DAFG - LR
	Actual power state of this widget.			
Rsvd1	3:2	R	0h	N/A (Hard-coded)
	Reserved.			
Set	1:0	RW	0h	POR - DAFG - LR
	Current power state setting for this widget.			

6.25. SPDIFOut0 (NID = 1Dh): WCap

Reg	Byte 4 (Bits 31:24)	Byte 3 (Bits 23:16)	Byte 2 (Bits 15:8)	Byte 1 (Bits 7:0)
Set				
Get	F0009h			

Field Name	Bits	R/W	Default	Reset
Rsvd2	31:24	R	00h	N/A (Hard-coded)
	Reserved.			

©2014 TEMPO SEMICONDCUTOR, INC..

Field Name	Bits	R/W	Default	Reset
Type	23:20	R	0h	N/A (Hard-coded)
	Widget type: 0h = Out Converter 1h = In Converter 2h = Summing (Mixer) 3h = Selector (Mux) 4h = Pin Complex 5h = Power 6h = Volume Knob 7h = Beep Generator 8h-Eh = Reserved Fh = Vendor Defined			
Delay	19:16	R	4h	N/A (Hard-coded)
	Number of sample delays through widget.			
Rsvd1	15:12	R	0h	N/A (Hard-coded)
	Reserved.			
SwapCap	11	R	0h	N/A (Hard-coded)
	Left/right swap support: 1 = yes, 0 = no.			
PwrCntrl	10	R	1h	N/A (Hard-coded)
	Power state support: 1 = yes, 0 = no.			
Dig	9	R	1h	N/A (Hard-coded)
	Digital stream support: 1 = yes (digital), 0 = no (analog).			
ConnList	8	R	0h	N/A (Hard-coded)
	Connection list present: 1 = yes, 0 = no.			
UnSolCap	7	R	0h	N/A (Hard-coded)
	Unsolicited response support: 1 = yes, 0 = no.			
ProcWidget	6	R	0h	N/A (Hard-coded)
	Processing state support: 1 = yes, 0 = no.			
Stripe	5	R	0h	N/A (Hard-coded)
	Striping support: 1 = yes, 0 = no.			
FormatOvrd	4	R	1h	N/A (Hard-coded)
	Stream format override: 1 = yes, 0 = no.			

©2014 TEMPO SEMICONDCUTOR, INC..

Field Name	Bits	R/W	Default	Reset
AmpParOvrd	3	R	1h	N/A (Hard-coded)
	Amplifier capabilities override: 1 = yes, no.			
OutAmpPrsnt	2	R	1h	N/A (Hard-coded)
	Output amp present: 1 = yes, 0 = no.			
InAmpPrsnt	1	R	0h	N/A (Hard-coded)
	Input amp present: 1 = yes, 0 = no.			
Stereo	0	R	1h	N/A (Hard-coded)
	Stereo stream support: 1 = yes (stereo), 0 = no (mono).			

6.25.1. SPDIFOut0 (NID = 1Dh): PCMCap

Reg	Byte 4 (Bits 31:24)	Byte 3 (Bits 23:16)	Byte 2 (Bits 15:8)	Byte 1 (Bits 7:0)
Set				
Get	F000Ah			

Field Name	Bits	R/W	Default	Reset
Rsvd2	31:21	R	000h	N/A (Hard-coded)
	Reserved.			
B32	20	R	0h	N/A (Hard-coded)
	32 bit audio format support: 1 = yes, 0 = no.			
B24	19	R	1h	N/A (Hard-coded)
	24 bit audio format support: 1 = yes, 0 = no.			
B20	18	R	1h	N/A (Hard-coded)
	20 bit audio format support: 1 = yes, 0 = no.			
B16	17	R	1h	N/A (Hard-coded)
	16 bit audio format support: 1 = yes, 0 = no.			
B8	16	R	0h	N/A (Hard-coded)
	8 bit audio format support: 1 = yes, 0 = no.			

©2014 TEMPO SEMICONDCUTOR, INC..

Field Name	Bits	R/W	Default	Reset
Rsvd1	15:12	R	0h	N/A (Hard-coded)
	Reserved.			
R12	11	R	0h	N/A (Hard-coded)
	384kHz rate support: 1 = yes, 0 = no.			
R11	10	R	1h	N/A (Hard-coded)
	192kHz rate support: 1 = yes, 0 = no.			
R10	9	R	0h	N/A (Hard-coded)
	176.4kHz rate support: 1 = yes, 0 = no.			
R9	8	R	1h	N/A (Hard-coded)
	96kHz rate support: 1 = yes, 0 = no.			
R8	7	R	1h	N/A (Hard-coded)
	88.2kHz rate support: 1 = yes, 0 = no.			
R7	6	R	1h	N/A (Hard-coded)
	48kHz rate support: 1 = yes, 0 = no.			
R6	5	R	1h	N/A (Hard-coded)
	44.1kHz rate support: 1 = yes, 0 = no.			
R5	4	R	0h	N/A (Hard-coded)
	32kHz rate support: 1 = yes, 0 = no.			
R4	3	R	0h	N/A (Hard-coded)
	22.05kHz rate support: 1 = yes, 0 = no.			
R3	2	R	0h	N/A (Hard-coded)
	16kHz rate support: 1 = yes, 0 = no.			
R2	1	R	0h	N/A (Hard-coded)
	11.025kHz rate support: 1 = yes, 0 = no.			
R1	0	R	0h	N/A (Hard-coded)
	8kHz rate support: 1 = yes, 0 = no.			

©2014 TEMPO SEMICONDCUTOR, INC..

6.25.2. SPDIFOut0 (NID = 1Dh): StreamCap

Reg	Byte 4 (Bits 31:24)	Byte 3 (Bits 23:16)	Byte 2 (Bits 15:8)	Byte 1 (Bits 7:0)
Set				
Get	F000Bh			

Field Name	Bits	R/W	Default	Reset
Rsvd	31:3	R	00000000h	N/A (Hard-coded)
	Reserved.			
AC3	2	R	1h	N/A (Hard-coded)
	AC-3 formatted data support: 1 = yes, 0 = no.			
Float32	1	R	0h	N/A (Hard-coded)
	Float32 formatted data support: 1 = yes, 0 = no.			
PCM	0	R	1h	N/A (Hard-coded)
	PCM-formatted data support: 1 = yes, 0 = no.			

6.25.3. SPDIFOut0 (NID = 1Dh): OutAmpCap

Reg	Byte 4 (Bits 31:24)	Byte 3 (Bits 23:16)	Byte 2 (Bits 15:8)	Byte 1 (Bits 7:0)
Set				
Get	F0012h			

Field Name	Bits	R/W	Default	Reset
Mute	31	R	1h	N/A (Hard-coded)
	Mute support: 1 = yes, 0 = no.			
Rsvd3	30:23	R	00h	N/A (Hard-coded)
	Reserved.			
StepSize	22:16	R	00h	N/A (Hard-coded)
	Size of each step in the gain range: 0 to 127 = .25dB to 32dB, in .25dB steps.			
Rsvd2	15	R	0h	N/A (Hard-coded)
	Reserved.			

©2014 TEMPO SEMICONDCUTOR, INC..

Field Name	Bits	R/W	Default	Reset
NumSteps	14:8	R	00h	N/A (Hard-coded)
	Number of gains steps (number of possible settings - 1).			
Rsvd1	7	R	0h	N/A (Hard-coded)
	Reserved.			
Offset	6:0	R	00h	N/A (Hard-coded)
	Indicates which step is 0dB			

6.25.4. SPDIFOut0 (NID = 1Dh): Cnvtr

Reg	Byte 4 (Bits 31:24)	Byte 3 (Bits 23:16)	Byte 2 (Bits 15:8)	Byte 1 (Bits 7:0)
Set			2h	
Get	A0000h			

Field Name	Bits	R/W	Default	Reset
Rsvd2	31:16	R	0000h	N/A (Hard-coded)
	Reserved.			
FrmtNonPCM	15	RW	0h	POR - DAFG - ULR
	Stream type: 1 = Non-PCM, 0 = PCM.			
FrmtSmplRate	14	RW	0h	POR - DAFG - ULR
	Sample base rate: 1 = 44.1kHz, 0 = 48kHz.			
SmplRateMultp	13:11	RW	0h	POR - DAFG - ULR
	Sample base rate multiple: 000b= x1 (48kHz/44.1kHz or less) 001b= x2 (96kHz/88.2kHz/32kHz) 010b= x3 (144kHz) 011b= x4 (192kHz/176.4kHz) 100b-111b Reserved			

©2014 TEMPO SEMICONDCUTOR, INC..

Field Name	Bits	R/W	Default	Reset
SmplRateDiv	10:8	RW	0h	POR - DAFG - ULR
	Sample base rate divider: 000b= Divide by 1 (48kHz/44.1kHz) 001b= Divide by 2 (24kHz/20.05kHz) 010b= Divide by 3 (16kHz/32kHz) 011b= Divide by 4 (11.025kHz) 100b= Divide by 5 (9.6kHz) 101b= Divide by 6 (8kHz) 110b= Divide by 7 111b= Divide by 8 (6kHz)			
Rsvd1	7	R	0h	N/A (Hard-coded)
	Reserved.			
BitsPerSmpl	6:4	RW	3h	POR - DAFG - ULR
	Bits per sample: 000b= 8 bits 001b= 16 bits 010b= 20 bits 011b= 24 bits 100b= 32 bits 101b-111b= Reserved			
NmbrChan	3:0	RW	1h	POR - DAFG - ULR
	Total number of channels in the stream assigned to this converter: 0000b-1111b= 1-16 channels.			

6.25.5. SPDIFOut0 (NID = 1Dh): OutAmpLeft

Reg	Byte 4 (Bits 31:24)	Byte 3 (Bits 23:16)	Byte 2 (Bits 15:8)	Byte 1 (Bits 7:0)
Set				3A0h
Get	BA000h			

Field Name	Bits	R/W	Default	Reset
Rsvd2	31:8	R	000000h	N/A (Hard-coded)
	Reserved.			
Mute	7	RW	0h	POR - DAFG - ULR
	Amp mute: 1 = muted, 0 = not muted.			

©2014 TEMPO SEMICONDCUTOR, INC..

Field Name	Bits	R/W	Default	Reset
Rsvd1	6:0	R	00h	N/A (Hard-coded)
	Reserved.			

6.25.6. SPDIFOut0 (NID = 1Dh): OutAmpRight

Reg	Byte 4 (Bits 31:24)	Byte 3 (Bits 23:16)	Byte 2 (Bits 15:8)	Byte 1 (Bits 7:0)
Set				390h
Get	B8000h			

Field Name	Bits	R/W	Default	Reset
Rsvd2	31:8	R	000000h	N/A (Hard-coded)
	Reserved.			
Mute	7	RW	0h	POR - DAFG - ULR
	Amp mute: 1 = muted, 0 = not muted.			
Rsvd1	6:0	R	00h	N/A (Hard-coded)
	Reserved.			

6.25.7. SPDIFOut0 (NID = 1Dh): PwrState

Reg	Byte 4 (Bits 31:24)	Byte 3 (Bits 23:16)	Byte 2 (Bits 15:8)	Byte 1 (Bits 7:0)
Set				705h
Get	F0500h			

Field Name	Bits	R/W	Default	Reset
Rsvd4	31:11	R	000000h	N/A (Hard-coded)
	Reserved.			
SettingsReset	10	R	1h	POR - DAFG - ULR
	Indicates if any persistent settings in this Widget have been reset. Cleared by PwrState 'Get', or a 'Set' to any Verb in this Widget.			
Rsvd3	9	R	0h	N/A (Hard-coded)
	Reserved.			

©2014 TEMPO SEMICONDCUTOR, INC..

Field Name	Bits	R/W	Default	Reset
Error	8	R	0h	POR - DAFG - ULR
	Error indicator: 1 = cannot enter requested power state, 0 = no problem with requested power state.			
Rsvd2	7:6	R	0h	N/A (Hard-coded)
	Reserved.			
Act	5:4	R	3h	POR - DAFG - LR
	Actual power state of this widget.			
Rsvd1	3:2	R	0h	N/A (Hard-coded)
	Reserved.			
Set	1:0	RW	3h	POR - DAFG - LR
	Current power state setting for this widget.			

6.25.8. SPDIFOut0 (NID = 1Dh): CnvtrID

Reg	Byte 4 (Bits 31:24)	Byte 3 (Bits 23:16)	Byte 2 (Bits 15:8)	Byte 1 (Bits 7:0)
Set				706h
Get	F0600h			

Field Name	Bits	R/W	Default	Reset
Rsvd	31:8	R	000000h	N/A (Hard-coded)
	Reserved.			
Strm	7:4	RW	0h	POR - S&DAFG - LR - PS
	Stream ID: 0h = Converter "off", 1h-Fh = valid ID's.			
Ch	3:0	RW	0h	POR - S&DAFG - LR - PS
	Channel assignment ("Ch" and "Ch+1" assigned as a pair, for a stereo converter).			

6.25.9. SPDIFOut0 (NID = 1Dh): DigCnvtr

Reg	Byte 4 (Bits 31:24)	Byte 3 (Bits 23:16)	Byte 2 (Bits 15:8)	Byte 1 (Bits 7:0)
Set	73Fh	73Eh	70Eh	70Dh
Get	F0E00h / F0D00h			

©2014 TEMPO SEMICONDCUTOR, INC..

Field Name	Bits	R/W	Default	Reset
Rsvd2	31:24	R	00h	N/A (Hard-coded)
	Reserved.			
KeepAlive	23	RW	0h	POR - DAFG - ULR
	Keep Alive Enable: 1 = clocking information maintained during D3, 0 = clock information not required during D3.			
Rsvd1	22:15	R	00h	N/A (Hard-coded)
	Reserved.			
CC	14:8	RW	00h	POR - DAFG - ULR
	CC: Category Code.			
L	7	RW	0h	POR - DAFG - ULR
	L: Generation Level.			
PRO	6	RW	0h	POR - DAFG - ULR
	PRO: Professional.			
AUDIO	5	RW	0h	POR - DAFG - ULR
	/AUDIO: Non-Audio.			
COPY	4	RW	0h	POR - DAFG - ULR
	COPY: Copyright.			
PRE	3	RW	0h	POR - DAFG - ULR
	PRE: Preemphasis.			
VCFG	2	RW	0h	POR - DAFG - ULR
	VCFG: Validity Config.			
V	1	RW	0h	POR - DAFG - ULR
	V: Validity.			
DigEn	0	RW	0h	POR - DAFG - ULR
	Digital enable: 1 = converter enabled, 0 = converter disable.			

6.26. SPDIFOut1 (NID = 1Eh): WCap

Reg	Byte 4 (Bits 31:24)	Byte 3 (Bits 23:16)	Byte 2 (Bits 15:8)	Byte 1 (Bits 7:0)
Set				

©2014 TEMPO SEMICONDCUTOR, INC..

6.26. SPDIFOut1 (NID = 1Eh): WCap

Reg	Byte 4 (Bits 31:24)	Byte 3 (Bits 23:16)	Byte 2 (Bits 15:8)	Byte 1 (Bits 7:0)
Get	F0009h			

Field Name	Bits	R/W	Default	Reset
Rsvd2	31:24	R	00h	N/A (Hard-coded)
	Reserved.			
Type	23:20	R	0h	N/A (Hard-coded)
	Widget type: 0h = Out Converter 1h = In Converter 2h = Summing (Mixer) 3h = Selector (Mux) 4h = Pin Complex 5h = Power 6h = Volume Knob 7h = Beep Generator 8h-Eh = Reserved Fh = Vendor Defined			
Delay	19:16	R	4h	N/A (Hard-coded)
	Number of sample delays through widget.			
Rsvd1	15:12	R	0h	N/A (Hard-coded)
	Reserved.			
SwapCap	11	R	0h	N/A (Hard-coded)
	Left/right swap support: 1 = yes, 0 = no.			
PwrCntrl	10	R	1h	N/A (Hard-coded)
	Power state support: 1 = yes, 0 = no.			
Dig	9	R	1h	N/A (Hard-coded)
	Digital stream support: 1 = yes (digital), 0 = no (analog).			
ConnList	8	R	0h	N/A (Hard-coded)
	Connection list present: 1 = yes, 0 = no.			
UnSolCap	7	R	0h	N/A (Hard-coded)
	Unsolicited response support: 1 = yes, 0 = no.			

©2014 TEMPO SEMICONDCUTOR, INC..

Field Name	Bits	R/W	Default	Reset
ProcWidget	6	R	0h	N/A (Hard-coded)
	Processing state support: 1 = yes, 0 = no.			
Stripe	5	R	0h	N/A (Hard-coded)
	Striping support: 1 = yes, 0 = no.			
FormatOvrd	4	R	1h	N/A (Hard-coded)
	Stream format override: 1 = yes, 0 = no.			
AmpParOvrd	3	R	1h	N/A (Hard-coded)
	Amplifier capabilities override: 1 = yes, no.			
OutAmpPrsnt	2	R	1h	N/A (Hard-coded)
	Output amp present: 1 = yes, 0 = no.			
InAmpPrsnt	1	R	0h	N/A (Hard-coded)
	Input amp present: 1 = yes, 0 = no.			
Stereo	0	R	1h	N/A (Hard-coded)
	Stereo stream support: 1 = yes (stereo), 0 = no (mono).			

6.26.1. SPDIFOut1 (NID = 1Eh): PCMCap

Reg	Byte 4 (Bits 31:24)	Byte 3 (Bits 23:16)	Byte 2 (Bits 15:8)	Byte 1 (Bits 7:0)
Set				
Get	F000Ah			

Field Name	Bits	R/W	Default	Reset
Rsvd2	31:21	R	000h	N/A (Hard-coded)
	Reserved.			
B32	20	R	0h	N/A (Hard-coded)
	32 bit audio format support: 1 = yes, 0 = no.			
B24	19	R	1h	N/A (Hard-coded)
	24 bit audio format support: 1 = yes, 0 = no.			

©2014 TEMPO SEMICONDCUTOR, INC..

Field Name	Bits	R/W	Default	Reset
B20	18	R	1h	N/A (Hard-coded)
	20 bit audio format support: 1 = yes, 0 = no.			
B16	17	R	1h	N/A (Hard-coded)
	16 bit audio format support: 1 = yes, 0 = no.			
B8	16	R	0h	N/A (Hard-coded)
	8 bit audio format support: 1 = yes, 0 = no.			
Rsvd1	15:12	R	0h	N/A (Hard-coded)
	Reserved.			
R12	11	R	0h	N/A (Hard-coded)
	384kHz rate support: 1 = yes, 0 = no.			
R11	10	R	1h	N/A (Hard-coded)
	192kHz rate support: 1 = yes, 0 = no.			
R10	9	R	0h	N/A (Hard-coded)
	176.4kHz rate support: 1 = yes, 0 = no.			
R9	8	R	1h	N/A (Hard-coded)
	96kHz rate support: 1 = yes, 0 = no.			
R8	7	R	1h	N/A (Hard-coded)
	88.2kHz rate support: 1 = yes, 0 = no.			
R7	6	R	1h	N/A (Hard-coded)
	48kHz rate support: 1 = yes, 0 = no.			
R6	5	R	1h	N/A (Hard-coded)
	44.1kHz rate support: 1 = yes, 0 = no.			
R5	4	R	0h	N/A (Hard-coded)
	32kHz rate support: 1 = yes, 0 = no.			
R4	3	R	0h	N/A (Hard-coded)
	22.05kHz rate support: 1 = yes, 0 = no.			
R3	2	R	0h	N/A (Hard-coded)
	16kHz rate support: 1 = yes, 0 = no.			

©2014 TEMPO SEMICONDCUTOR, INC..

Field Name	Bits	R/W	Default	Reset
R2	1	R	0h	N/A (Hard-coded)
	11.025kHz rate support: 1 = yes, 0 = no.			
R1	0	R	0h	N/A (Hard-coded)
	8kHz rate support: 1 = yes, 0 = no.			

6.26.2. SPDIFOut1 (NID = 1Eh): StreamCap

Reg	Byte 4 (Bits 31:24)	Byte 3 (Bits 23:16)	Byte 2 (Bits 15:8)	Byte 1 (Bits 7:0)
Set				
Get	F000Bh			

Field Name	Bits	R/W	Default	Reset
Rsvd	31:3	R	00000000h	N/A (Hard-coded)
	Reserved.			
AC3	2	R	1h	N/A (Hard-coded)
	AC-3 formatted data support: 1 = yes, 0 = no.			
Float32	1	R	0h	N/A (Hard-coded)
	Float32 formatted data support: 1 = yes, 0 = no.			
PCM	0	R	1h	N/A (Hard-coded)
	PCM-formatted data support: 1 = yes, 0 = no.			

6.26.3. SPDIFOut1 (NID = 1Eh): OutAmpCap

Reg	Byte 4 (Bits 31:24)	Byte 3 (Bits 23:16)	Byte 2 (Bits 15:8)	Byte 1 (Bits 7:0)
Set				
Get	F0012h			

Field Name	Bits	R/W	Default	Reset
Mute	31	R	1h	N/A (Hard-coded)
	Mute support: 1 = yes, 0 = no.			

©2014 TEMPO SEMICONDCUTOR, INC..

Field Name	Bits	R/W	Default	Reset
Rsvd3	30:23	R	00h	N/A (Hard-coded)
	Reserved.			
StepSize	22:16	R	00h	N/A (Hard-coded)
	Size of each step in the gain range: 0 to 127 = .25dB to 32dB, in .25dB steps.			
Rsvd2	15	R	0h	N/A (Hard-coded)
	Reserved.			
NumSteps	14:8	R	00h	N/A (Hard-coded)
	Number of gains steps (number of possible settings - 1).			
Rsvd1	7	R	0h	N/A (Hard-coded)
	Reserved.			
Offset	6:0	R	00h	N/A (Hard-coded)
	Indicates which step is 0dB			

6.26.4. SPDIFOut1 (NID = 1Eh): Cnvtr

Reg	Byte 4 (Bits 31:24)	Byte 3 (Bits 23:16)	Byte 2 (Bits 15:8)	Byte 1 (Bits 7:0)
Set			2h	
Get	A0000h			

Field Name	Bits	R/W	Default	Reset
Rsvd2	31:16	R	0000h	N/A (Hard-coded)
	Reserved.			
FrmtNonPCM	15	RW	0h	POR - DAFG - ULR
	Stream type: 1 = Non-PCM, 0 = PCM.			
FrmtSmplRate	14	RW	0h	POR - DAFG - ULR
	Sample base rate: 1 = 44.1kHz, 0 = 48kHz.			

©2014 TEMPO SEMICONDCUTOR, INC..

Field Name	Bits	R/W	Default	Reset
SmplRateMultp	13:11	RW	0h	POR - DAFG - ULR
	Sample base rate multiple: 000b= x1 (48kHz/44.1kHz or less) 001b= x2 (96kHz/88.2kHz/32kHz) 010b= x3 (144kHz) 011b= x4 (192kHz/176.4kHz) 100b-111b Reserved			
SmplRateDiv	10:8	RW	0h	POR - DAFG - ULR
	Sample base rate divider: 000b= Divide by 1 (48kHz/44.1kHz) 001b= Divide by 2 (24kHz/20.05kHz) 010b= Divide by 3 (16kHz/32kHz) 011b= Divide by 4 (11.025kHz) 100b= Divide by 5 (9.6kHz) 101b= Divide by 6 (8kHz) 110b= Divide by 7 111b= Divide by 8 (6kHz)			
Rsvd1	7	R	0h	N/A (Hard-coded)
	Reserved.			
BitsPerSmpl	6:4	RW	3h	POR - DAFG - ULR
	Bits per sample: 000b= 8 bits 001b= 16 bits 010b= 20 bits 011b= 24 bits 100b= 32 bits 101b-111b= Reserved			
NmbrChan	3:0	RW	1h	POR - DAFG - ULR
	Total number of channels in the stream assigned to this converter: 0000b-1111b= 1-16 channels.			

6.26.5. SPDIFOut1 (NID = 1Eh): OutAmpLeft

Reg	Byte 4 (Bits 31:24)	Byte 3 (Bits 23:16)	Byte 2 (Bits 15:8)	Byte 1 (Bits 7:0)
Set				3A0h
Get	BA000h			

©2014 TEMPO SEMICONDCUTOR, INC..

Field Name	Bits	R/W	Default	Reset
Rsvd2	31:8	R	000000h	N/A (Hard-coded)
	Reserved.			
Mute	7	RW	0h	POR - DAFG - ULR
	Amp mute: 1 = muted, 0 = not muted.			
Rsvd1	6:0	R	00h	N/A (Hard-coded)
	Reserved.			

6.26.6. SPDIFOut1 (NID = 1Eh): OutAmpRight

Reg	Byte 4 (Bits 31:24)	Byte 3 (Bits 23:16)	Byte 2 (Bits 15:8)	Byte 1 (Bits 7:0)
Set				390h
Get	B8000h			

Field Name	Bits	R/W	Default	Reset
Rsvd2	31:8	R	000000h	N/A (Hard-coded)
	Reserved.			
Mute	7	RW	0h	POR - DAFG - ULR
	Amp mute: 1 = muted, 0 = not muted.			
Rsvd1	6:0	R	00h	N/A (Hard-coded)
	Reserved.			

6.26.7. SPDIFOut1 (NID = 1Eh): PwrState

Reg	Byte 4 (Bits 31:24)	Byte 3 (Bits 23:16)	Byte 2 (Bits 15:8)	Byte 1 (Bits 7:0)
Set				705h
Get	F0500h			

Field Name	Bits	R/W	Default	Reset
Rsvd4	31:11	R	000000h	N/A (Hard-coded)
	Reserved.			

©2014 TEMPO SEMICONDCUTOR, INC..

Field Name	Bits	R/W	Default	Reset
SettingsReset	10	R	1h	POR - DAFG - ULR
	Indicates if any persistent settings in this Widget have been reset. Cleared by PwrState 'Get', or a 'Set' to any Verb in this Widget.			
Rsvd3	9	R	0h	N/A (Hard-coded)
	Reserved.			
Error	8	R	0h	POR - DAFG - ULR
	Error indicator: 1 = cannot enter requested power state, 0 = no problem with requested power state.			
Rsvd2	7:6	R	0h	N/A (Hard-coded)
	Reserved.			
Act	5:4	R	3h	POR - DAFG - LR
	Actual power state of this widget.			
Rsvd1	3:2	R	0h	N/A (Hard-coded)
	Reserved.			
Set	1:0	RW	3h	POR - DAFG - LR
	Current power state setting for this widget.			

6.26.8. SPDIFOut1 (NID = 1Eh): CnvtrID

Reg	Byte 4 (Bits 31:24)	Byte 3 (Bits 23:16)	Byte 2 (Bits 15:8)	Byte 1 (Bits 7:0)
Set				706h
Get	F0600h			

Field Name	Bits	R/W	Default	Reset
Rsvd	31:8	R	000000h	N/A (Hard-coded)
	Reserved.			
Strm	7:4	RW	0h	POR - S&DAFG - LR - PS
	Stream ID: 0h = Converter "off", 1h-Fh = valid ID's.			
Ch	3:0	RW	0h	POR - S&DAFG - LR - PS
	Channel assignment ("Ch" and "Ch+1" assigned as a pair, for a stereo converter).			

©2014 TEMPO SEMICONDCUTOR, INC..

6.26.9. SPDIFOut1 (NID = 1Eh): DigCnvtr

Reg	Byte 4 (Bits 31:24)	Byte 3 (Bits 23:16)	Byte 2 (Bits 15:8)	Byte 1 (Bits 7:0)
Set	73Fh	73Eh	70Eh	70Dh
Get	F0E00h / F0D00h			

Field Name	Bits	R/W	Default	Reset
Rsvd2	31:24	R	00h	N/A (Hard-coded)
	Reserved.			
KeepAlive	23	RW	0h	POR - DAFG - ULR
	Keep Alive Enable: 1 = clocking information maintained during D3, 0 = clock information not required during D3.			
Rsvd1	22:15	R	00h	N/A (Hard-coded)
	Reserved.			
CC	14:8	RW	00h	POR - DAFG - ULR
	CC: Category Code.			
L	7	RW	0h	POR - DAFG - ULR
	L: Generation Level.			
PRO	6	RW	0h	POR - DAFG - ULR
	PRO: Professional.			
AUDIO	5	RW	0h	POR - DAFG - ULR
	/AUDIO: Non-Audio.			
COPY	4	RW	0h	POR - DAFG - ULR
	COPY: Copyright.			
PRE	3	RW	0h	POR - DAFG - ULR
	PRE: Preemphasis.			
VCFG	2	RW	0h	POR - DAFG - ULR
	VCFG: Validity Config.			
V	1	RW	0h	POR - DAFG - ULR
	V: Validity.			

©2014 TEMPO SEMICONDCUTOR, INC..

Field Name	Bits	R/W	Default	Reset
DigEn	0	RW	0h	POR - DAFG - ULR
	Digital enable: 1 = converter enabled, 0 = converter disable.			

6.27. Dig0Pin (NID = 1Fh): WCap

Reg	Byte 4 (Bits 31:24)	Byte 3 (Bits 23:16)	Byte 2 (Bits 15:8)	Byte 1 (Bits 7:0)
Set				
Get	F0009h			

Field Name	Bits	R/W	Default	Reset
Rsvd2	31:24	R	00h	N/A (Hard-coded)
	Reserved.			
Type	23:20	R	4h	N/A (Hard-coded)
	Widget type: 0h = Out Converter 1h = In Converter 2h = Summing (Mixer) 3h = Selector (Mux) 4h = Pin Complex 5h = Power 6h = Volume Knob 7h = Beep Generator 8h-Eh = Reserved Fh = Vendor Defined			
Delay	19:16	R	0h	N/A (Hard-coded)
	Number of sample delays through widget.			
Rsvd1	15:12	R	0h	N/A (Hard-coded)
	Reserved.			
SwapCap	11	R	0h	N/A (Hard-coded)
	Left/right swap support: 1 = yes, 0 = no.			
PwrCntrl	10	R	1h	N/A (Hard-coded)
	Power state support: 1 = yes, 0 = no.			
Dig	9	R	1h	N/A (Hard-coded)
	Digital stream support: 1 = yes (digital), 0 = no (analog).			

©2014 TEMPO SEMICONDCUTOR, INC..

Field Name	Bits	R/W	Default	Reset
ConnList	8	R	1h	N/A (Hard-coded)
	Connection list present: 1 = yes, 0 = no.			
UnSolCap	7	R	1h	N/A (Hard-coded)
	Unsolicited response support: 1 = yes, 0 = no.			
ProcWidget	6	R	0h	N/A (Hard-coded)
	Processing state support: 1 = yes, 0 = no.			
Stripe	5	R	0h	N/A (Hard-coded)
	Striping support: 1 = yes, 0 = no.			
FormatOvrd	4	R	0h	N/A (Hard-coded)
	Stream format override: 1 = yes, 0 = no.			
AmpParOvrd	3	R	0h	N/A (Hard-coded)
	Amplifier capabilities override: 1 = yes, no.			
OutAmpPrsnt	2	R	0h	N/A (Hard-coded)
	Output amp present: 1 = yes, 0 = no.			
InAmpPrsnt	1	R	0h	N/A (Hard-coded)
	Input amp present: 1 = yes, 0 = no.			
Stereo	0	R	1h	N/A (Hard-coded)
	Stereo stream support: 1 = yes (stereo), 0 = no (mono).			

6.27.1. Dig0Pin (NID = 1Fh): PinCap

Reg	Byte 4 (Bits 31:24)	Byte 3 (Bits 23:16)	Byte 2 (Bits 15:8)	Byte 1 (Bits 7:0)
Set				
Get	F000Ch			

Field Name	Bits	R/W	Default	Reset
Rsvd2	31:17	R	0000h	N/A (Hard-coded)
	Reserved.			

©2014 TEMPO SEMICONDCUTOR, INC..

Field Name	Bits	R/W	Default	Reset
EapdCap	16	R	0h	N/A (Hard-coded)
	EAPD support: 1 = yes, 0 = no.			
VrefCntrl	15:8	R	00h	N/A (Hard-coded)
	Vref support: bit 7 = Reserved bit 6 = Reserved bit 5 = 100% support (1 = yes, 0 = no) bit 4 = 80% support (1 = yes, 0 = no) bit 3 = Reserved bit 2 = GND support (1 = yes, 0 = no) bit 1 = 50% support (1 = yes, 0 = no) bit 0 = Hi-Z support (1 = yes, 0 = no)			
Rsvd1	7	R	0h	N/A (Hard-coded)
	Reserved.			
BalancedIO	6	R	0h	N/A (Hard-coded)
	Balanced I/O support: 1 = yes, 0 = no.			
InCap	5	R	1h	N/A (Hard-coded)
	Input support: 1 = yes, 0 = no.			
OutCap	4	R	1h	N/A (Hard-coded)
	Output support: 1 = yes, 0 = no.			
HdphDrvCap	3	R	0h	N/A (Hard-coded)
	Headphone amp present: 1 = yes, 0 = no.			
PresDtctCap	2	R	1h	N/A (Hard-coded)
	Presence detection support: 1 = yes, 0 = no.			
TrigRqd	1	R	0h	N/A (Hard-coded)
	Trigger required for impedance sense: 1 = yes, 0 = no.			
ImpSenseCap	0	R	0h	N/A (Hard-coded)
	Impedance sense support: 1 = yes, 0 = no.			

6.27.2. Dig0Pin (NID = 1Fh): ConLst

Reg	Byte 4 (Bits 31:24)	Byte 3 (Bits 23:16)	Byte 2 (Bits 15:8)	Byte 1 (Bits 7:0)
Set				
Get	F000Eh			

©2014 TEMPO SEMICONDCUTOR, INC..

Field Name	Bits	R/W	Default	Reset
Rsvd	31:8	R	000000h	N/A (Hard-coded)
	Reserved.			
LForm	7	R	0h	N/A (Hard-coded)
	Connection list format: 1 = long-form (15-bit) NID entries, 0 = short-form (7-bit) NID entries.			
ConL	6:0	R	01h	N/A (Hard-coded)
	Number of NID entries in connection list.			

6.27.3. Dig0Pin (NID = 1Fh): ConLstEntry0

Reg	Byte 4 (Bits 31:24)	Byte 3 (Bits 23:16)	Byte 2 (Bits 15:8)	Byte 1 (Bits 7:0)
Set				
Get	F0200h			

Field Name	Bits	R/W	Default	Reset
ConL3	31:24	R	00h	N/A (Hard-coded)
	Unused list entry.			
ConL2	23:16	R	00h	N/A (Hard-coded)
	Unused list entry.			
ConL1	15:8	R	00h	N/A (Hard-coded)
	Unused list entry.			
ConL0	7:0	R	1Dh	N/A (Hard-coded)
	SPDIFOut0 Converter widget (0x1D)			

6.27.4. Dig0Pin (NID = 1Fh): PwrState

Reg	Byte 4 (Bits 31:24)	Byte 3 (Bits 23:16)	Byte 2 (Bits 15:8)	Byte 1 (Bits 7:0)
Set				705h
Get	F0500h			

©2014 TEMPO SEMICONDCUTOR, INC..

Field Name	Bits	R/W	Default	Reset
Rsvd4	31:11	R	000000h	N/A (Hard-coded)
	Reserved.			
SettingsReset	10	R	1h	POR - DAFG - ULR
	Indicates if any persistent settings in this Widget have been reset. Cleared by PwrState 'Get', or a 'Set' to any Verb in this Widget.			
Rsvd3	9	R	0h	N/A (Hard-coded)
	Reserved.			
Error	8	R	0h	POR - DAFG - ULR
	Error indicator: 1 = cannot enter requested power state, 0 = no problem with requested power state.			
Rsvd2	7:6	R	0h	N/A (Hard-coded)
	Reserved.			
Act	5:4	R	3h	POR - DAFG - LR
	Actual power state of this widget.			
Rsvd1	3:2	R	0h	N/A (Hard-coded)
	Reserved.			
Set	1:0	RW	0h	POR - DAFG - LR
	Current power state setting for this widget.			

6.27.5. Dig0Pin (NID = 1Fh): PinWCntrl

Reg	Byte 4 (Bits 31:24)	Byte 3 (Bits 23:16)	Byte 2 (Bits 15:8)	Byte 1 (Bits 7:0)
Set				707h
Get	F0700h			

Field Name	Bits	R/W	Default	Reset
Rsvd2	31:7	R	0000000h	N/A (Hard-coded)
	Reserved.			
OutEn	6	RW	0h	POR - DAFG - ULR
	Output enable: 1 = enabled, 0 = disabled.			

©2014 TEMPO SEMICONDCUTOR, INC..

Field Name	Bits	R/W	Default	Reset
InEn	5	RW	0h	POR - DAFG - ULR
	Input enable; 1 = enabled, 0 = disabled			
Rsvd1	4:0	R	00h	N/A (Hard-coded)
	Reserved.			

6.27.6. Dig0Pin (NID = 1Fh): UnsolResp

Reg	Byte 4 (Bits 31:24)	Byte 3 (Bits 23:16)	Byte 2 (Bits 15:8)	Byte 1 (Bits 7:0)
Set				708h
Get	F0800h			

Field Name	Bits	R/W	Default	Reset
Rsvd2	31:8	R	000000h	N/A (Hard-coded)
	Reserved.			
En	7	RW	0h	POR - DAFG - ULR
	Unsolicited response enable (also enables Wake events for this Widget): 1 = enabled, 0 = disabled.			
Rsvd1	6	R	0h	N/A (Hard-coded)
	Reserved.			
Tag	5:0	RW	00h	POR - DAFG - ULR
	Software programmable field returned in top six bits (31:26) of every Unsolicited Response generated by this node.			

6.27.7. Dig0Pin (NID = 1Fh): ChSense

Reg	Byte 4 (Bits 31:24)	Byte 3 (Bits 23:16)	Byte 2 (Bits 15:8)	Byte 1 (Bits 7:0)
Set				709h
Get	F0900h			

©2014 TEMPO SEMICONDCUTOR, INC..

Field Name	Bits	R/W	Default	Reset
PresDtct	31	R	0h	POR
	Presence detection indicator: 1 = presence detected; 0 = presence not detected.			
Rsvd	30:0	R	00000000h	N/A (Hard-coded)
	Reserved.			

6.27.8. Dig0Pin (NID = 1Fh): ConfigDefault

Reg	Byte 4 (Bits 31:24)	Byte 3 (Bits 23:16)	Byte 2 (Bits 15:8)	Byte 1 (Bits 7:0)
Set	71Fh	71Eh	71Dh	71Ch
Get	F1F00h / F1E00h / F1D00h / F1C00h			

Field Name	Bits	R/W	Default	Reset
PortConnectivity	31:30	RW	0h	POR
	Port connectivity: 0h = Port complex is connected to a jack 1h = No physical connection for port 2h = Fixed function device is attached 3h = Both jack and internal device attached (info in all other fields refers to integrated device, any presence detection refers to jack)			
Location	29:24	RW	01h	POR
	Location Bits [5..4]: 0h = External on primary chassis 1h = Internal 2h = Separate chassis 3h = Other Bits [3..0]: 0h = N/A 1h = Rear 2h = Front 3h = Left 4h = Right 5h = Top 6h = Bottom 7h-9h = Special Ah-Fh = Reserved			

©2014 TEMPO SEMICONDCUTOR, INC..

Field Name	Bits	R/W	Default	Reset
Device	23:20	RW	4h	POR
	Default device: 0h = Line out 1h = Speaker 2h = HP out 3h = CD 4h = SPDIF Out 5h = Digital other out 6h = Modem line side 7h = Modem handset side 8h = Line in 9h = Aux Ah = Mic in Bh = Telephony Ch = SPDIF In Dh = Digital other in Eh = Reserved Fh = Other			
ConnectionType	19:16	RW	5h	POR
	Connection type: 0h = Unknown 1h = 1/8" stereo/mono 2h = 1/4" stereo/mono 3h = ATAPI internal 4h = RCA 5h = Optical 6h = Other digital 7h = Other analog 8h = Multichannel analog (DIN) 9h = XLR/Professional Ah = RJ-11 (modem) Bh = Combination Ch-Eh = Reserved Fh = Other			

©2014 TEMPO SEMICONDCUTOR, INC..

Field Name	Bits	R/W	Default	Reset
Color	15:12	RW	1h	POR
	Color: 0h = Unknown 1h = Black 2h = Grey 3h = Blue 4h = Green 5h = Red 6h = Orange 7h = Yellow 8h = Purple 9h = Pink Ah-Dh = Reserved Eh = White Fh = Other			
Misc	11:8	RW	1h	POR
	Miscellaneous: Bits [3..1] = Reserved Bit 0 = Jack detect override			
Association	7:4	RW	5h	POR
	Default assocation.			
Sequence	3:0	RW	0h	POR
	Sequence.			

6.28. Dig1Pin (NID = 20h): WCap

Reg	Byte 4 (Bits 31:24)	Byte 3 (Bits 23:16)	Byte 2 (Bits 15:8)	Byte 1 (Bits 7:0)
Set				
Get	F0009h			

Field Name	Bits	R/W	Default	Reset
Rsvd2	31:24	R	00h	N/A (Hard-coded)
	Reserved.			

©2014 TEMPO SEMICONDCUTOR, INC..

Field Name	Bits	R/W	Default	Reset
Type	23:20	R	4h	N/A (Hard-coded)
	Widget type: 0h = Out Converter 1h = In Converter 2h = Summing (Mixer) 3h = Selector (Mux) 4h = Pin Complex 5h = Power 6h = Volume Knob 7h = Beep Generator 8h-Eh = Reserved Fh = Vendor Defined			
Delay	19:16	R	0h	N/A (Hard-coded)
	Number of sample delays through widget.			
Rsvd1	15:12	R	0h	N/A (Hard-coded)
	Reserved.			
SwapCap	11	R	0h	N/A (Hard-coded)
	Left/right swap support: 1 = yes, 0 = no.			
PwrCntrl	10	R	1h	N/A (Hard-coded)
	Power state support: 1 = yes, 0 = no.			
Dig	9	R	1h	N/A (Hard-coded)
	Digital stream support: 1 = yes (digital), 0 = no (analog).			
ConnList	8	R	1h	N/A (Hard-coded)
	Connection list present: 1 = yes, 0 = no.			
UnSolCap	7	R	1h	N/A (Hard-coded)
	Unsolicited response support: 1 = yes, 0 = no.			
ProcWidget	6	R	0h	N/A (Hard-coded)
	Processing state support: 1 = yes, 0 = no.			
Stripe	5	R	0h	N/A (Hard-coded)
	Striping support: 1 = yes, 0 = no.			
FormatOvrd	4	R	0h	N/A (Hard-coded)
	Stream format override: 1 = yes, 0 = no.			

©2014 TEMPO SEMICONDCUTOR, INC..

Field Name	Bits	R/W	Default	Reset
AmpParOvrd	3	R	0h	N/A (Hard-coded)
	Amplifier capabilities override: 1 = yes, no.			
OutAmpPrsnt	2	R	0h	N/A (Hard-coded)
	Output amp present: 1 = yes, 0 = no.			
InAmpPrsnt	1	R	0h	N/A (Hard-coded)
	Input amp present: 1 = yes, 0 = no.			
Stereo	0	R	1h	N/A (Hard-coded)
	Stereo stream support: 1 = yes (stereo), 0 = no (mono).			

6.28.1. Dig1Pin (NID = 20h): PinCap

Reg	Byte 4 (Bits 31:24)	Byte 3 (Bits 23:16)	Byte 2 (Bits 15:8)	Byte 1 (Bits 7:0)
Set				
Get	F000Ch			

Field Name	Bits	R/W	Default	Reset
Rsvd2	31:17	R	0000h	N/A (Hard-coded)
	Reserved.			
EapdCap	16	R	0h	N/A (Hard-coded)
	EAPD support: 1 = yes, 0 = no.			
VrefCntrl	15:8	R	00h	N/A (Hard-coded)
	Vref support: bit 7 = Reserved bit 6 = Reserved bit 5 = 100% support (1 = yes, 0 = no) bit 4 = 80% support (1 = yes, 0 = no) bit 3 = Reserved bit 2 = GND support (1 = yes, 0 = no) bit 1 = 50% support (1 = yes, 0 = no) bit 0 = Hi-Z support (1 = yes, 0 = no)			
Rsvd1	7	R	0h	N/A (Hard-coded)
	Reserved.			

©2014 TEMPO SEMICONDCUTOR, INC..

Field Name	Bits	R/W	Default	Reset
BalancedIO	6	R	0h	N/A (Hard-coded)
	Balanced I/O support: 1 = yes, 0 = no.			
InCap	5	R	1h	N/A (Hard-coded)
	Input support: 1 = yes, 0 = no.			
OutCap	4	R	1h	N/A (Hard-coded)
	Output support: 1 = yes, 0 = no.			
HdphDrvCap	3	R	0h	N/A (Hard-coded)
	Headphone amp present: 1 = yes, 0 = no.			
PresDtctCap	2	R	1h	N/A (Hard-coded)
	Presence detection support: 1 = yes, 0 = no.			
TrigRqd	1	R	0h	N/A (Hard-coded)
	Trigger required for impedance sense: 1 = yes, 0 = no.			
ImpSenseCap	0	R	0h	N/A (Hard-coded)
	Impedance sense support: 1 = yes, 0 = no.			

6.28.2. Dig1Pin (NID = 20h): ConLst

Reg	Byte 4 (Bits 31:24)	Byte 3 (Bits 23:16)	Byte 2 (Bits 15:8)	Byte 1 (Bits 7:0)
Set				
Get	F000Eh			

Field Name	Bits	R/W	Default	Reset
Rsvd	31:8	R	000000h	N/A (Hard-coded)
	Reserved.			
LForm	7	R	0h	N/A (Hard-coded)
	Connection list format: 1 = long-form (15-bit) NID entries, 0 = short-form (7-bit) NID entries.			
ConL	6:0	R	01h	N/A (Hard-coded)
	Number of NID entries in connection list.			

©2014 TEMPO SEMICONDCUTOR, INC..

6.28.3. Dig1Pin (NID = 20h): ConLstEntry0

Reg	Byte 4 (Bits 31:24)	Byte 3 (Bits 23:16)	Byte 2 (Bits 15:8)	Byte 1 (Bits 7:0)
Set				
Get	F0200h			

Field Name	Bits	R/W	Default	Reset
ConL3	31:24	R	00h	N/A (Hard-coded)
	Unused list entry.			
ConL2	23:16	R	00h	N/A (Hard-coded)
	Unused list entry.			
ConL1	15:8	R	00h	N/A (Hard-coded)
	Unused list entry.			
ConL0	7:0	R	1Eh	N/A (Hard-coded)
	SPDIFOut1 Converter widget (0x1E)			

6.28.4. Dig1Pin (NID = 20h): PwrState

Reg	Byte 4 (Bits 31:24)	Byte 3 (Bits 23:16)	Byte 2 (Bits 15:8)	Byte 1 (Bits 7:0)
Set				705h
Get	F0500h			

Field Name	Bits	R/W	Default	Reset
Rsvd4	31:11	R	000000h	N/A (Hard-coded)
	Reserved.			
SettingsReset	10	R	1h	POR - DAFG - ULR
	Indicates if any persistent settings in this Widget have been reset. Cleared by PwrState 'Get', or a 'Set' to any Verb in this Widget.			
Rsvd3	9	R	0h	N/A (Hard-coded)
	Reserved.			

©2014 TEMPO SEMICONDCUTOR, INC..

Field Name	Bits	R/W	Default	Reset
Error	8	R	0h	POR - DAFG - ULR
	Error indicator: 1 = cannot enter requested power state, 0 = no problem with requested power state.			
Rsvd2	7:6	R	0h	N/A (Hard-coded)
	Reserved.			
Act	5:4	R	3h	POR - DAFG - LR
	Actual power state of this widget.			
Rsvd1	3:2	R	0h	N/A (Hard-coded)
	Reserved.			
Set	1:0	RW	0h	POR - DAFG - LR
	Current power state setting for this widget.			

6.28.5. Dig1Pin (NID = 20h): PinWCntrl

Reg	Byte 4 (Bits 31:24)	Byte 3 (Bits 23:16)	Byte 2 (Bits 15:8)	Byte 1 (Bits 7:0)
Set				707h
Get	F0700h			

Field Name	Bits	R/W	Default	Reset
Rsvd2	31:7	R	0000000h	N/A (Hard-coded)
	Reserved.			
OutEn	6	RW	0h	POR - DAFG - ULR
	Output enable: 1 = enabled, 0 = disabled.			
InEn	5	RW	0h	POR - DAFG - ULR
	Input enable: 1 = enabled, 0 = disabled.			
Rsvd1	4:0	R	00h	N/A (Hard-coded)
	Reserved.			

©2014 TEMPO SEMICONDCUTOR, INC..

6.28.6. Dig1Pin (NID = 20h): UnsolResp

Reg	Byte 4 (Bits 31:24)	Byte 3 (Bits 23:16)	Byte 2 (Bits 15:8)	Byte 1 (Bits 7:0)
Set				708h
Get	F0800h			

Field Name	Bits	R/W	Default	Reset
Rsvd2	31:8	R	000000h	N/A (Hard-coded)
	Reserved.			
En	7	RW	0h	POR - DAFG - ULR
	Unsolicited response enable (also enables Wake events for this Widget): 1 = enabled, 0 = disabled.			
Rsvd1	6	R	0h	N/A (Hard-coded)
	Reserved.			
Tag	5:0	RW	00h	POR - DAFG - ULR
	Software programmable field returned in top six bits (31:26) of every Unsolicited Response generated by this node.			

6.28.7. Dig1Pin (NID = 20h): ChSense

Reg	Byte 4 (Bits 31:24)	Byte 3 (Bits 23:16)	Byte 2 (Bits 15:8)	Byte 1 (Bits 7:0)
Set				709h
Get	F0900h			

Field Name	Bits	R/W	Default	Reset
PresDtct	31	R	0h	POR
	Presence detection indicator: 1 = presence detected; 0 = presence not detected.			
Rsvd	30:0	R	00000000h	N/A (Hard-coded)
	Reserved.			

6.28.8. Dig1Pin (NID = 20h): ConfigDefault

Reg	Byte 4 (Bits 31:24)	Byte 3 (Bits 23:16)	Byte 2 (Bits 15:8)	Byte 1 (Bits 7:0)
Set	71Fh	71Eh	71Dh	71Ch
Get	F1F00h / F1E00h / F1D00h / F1C00h			

©2014 TEMPO SEMICONDCUTOR, INC..

Field Name	Bits	R/W	Default	Reset
PortConnectivity	31:30	RW	2h	POR
	Port connectivity: 0h = Port complex is connected to a jack 1h = No physical connection for port 2h = Fixed function device is attached 3h = Both jack and internal device attached (info in all other fields refers to integrated device, any presence detection refers to jack)			
Location	29:24	RW	18h	POR
	Location Bits [5..4]: 0h = External on primary chassis 1h = Internal 2h = Separate chassis 3h = Other Bits [3..0]: 0h = N/A 1h = Rear 2h = Front 3h = Left 4h = Right 5h = Top 6h = Bottom 7h-9h = Special Ah-Fh = Reserved			
Device	23:20	RW	5h	POR
	Default device: 0h = Line out 1h = Speaker 2h = HP out 3h = CD 4h = SPDIF Out 5h = Digital other out 6h = Modem line side 7h = Modem handset side 8h = Line in 9h = Aux Ah = Mic in Bh = Telephony Ch = SPDIF In Dh = Digital other in Eh = Reserved Fh = Other			

©2014 TEMPO SEMICONDCUTOR, INC..

Field Name	Bits	R/W	Default	Reset
ConnectionType	19:16	RW	6h	POR
	Connection type: 0h = Unknown 1h = 1/8" stereo/mono 2h = 1/4" stereo/mono 3h = ATAPI internal 4h = RCA 5h = Optical 6h = Other digital 7h = Other analog 8h = Multichannel analog (DIN) 9h = XLR/Professional Ah = RJ-11 (modem) Bh = Combination Ch-Eh = Reserved Fh = Other			
Color	15:12	RW	0h	POR
	Color: 0h = Unknown 1h = Black 2h = Grey 3h = Blue 4h = Green 5h = Red 6h = Orange 7h = Yellow 8h = Purple 9h = Pink Ah-Dh = Reserved Eh = White Fh = Other			
Misc	11:8	RW	1h	POR
	Miscellaneous: Bits [3..1] = Reserved Bit 0 = Jack detect override			
Association	7:4	RW	6h	POR
	Default assocation.			
Sequence	3:0	RW	0h	POR
	Sequence.			

©2014 TEMPO SEMICONDCUTOR, INC..

6.29. DigBeep (NID = 21h): WCap

Reg	Byte 4 (Bits 31:24)	Byte 3 (Bits 23:16)	Byte 2 (Bits 15:8)	Byte 1 (Bits 7:0)
Set				
Get	F0009h			

Field Name	Bits	R/W	Default	Reset
Rsvd4	31:24	R	00h	N/A (Hard-coded)
	Reserved.			
Type	23:20	R	7h	N/A (Hard-coded)
	Widget type: 0h = Out Converter 1h = In Converter 2h = Summing (Mixer) 3h = Selector (Mux) 4h = Pin Complex 5h = Power 6h = Volume Knob 7h = Beep Generator 8h-Eh = Reserved Fh = Vendor Defined			
Rsvd3	19:11	R	000h	N/A (Hard-coded)
	Reserved.			
PwrCntrl	10	R	1h	N/A (Hard-coded)
	Power state support: 1 = yes, 0 = no."			
Rsvd2	9:4	R	00h	N/A (Hard-coded)
	Reserved			
AmpParOvrd	3	R	1h	N/A (Hard-coded)
	Amplifier capabilities override: 1 = yes, no.			
OutAmpPrsnt	2	R	1h	N/A (Hard-coded)
	Output amp present: 1 = yes, 0 = no.			
Rsvd1	1:0	R	0h	N/A (Hard-coded)
	Reserved.			

©2014 TEMPO SEMICONDCUTOR, INC..

6.29.1. DigBeep (NID = 21h): OutAmpCap

Reg	Byte 4 (Bits 31:24)	Byte 3 (Bits 23:16)	Byte 2 (Bits 15:8)	Byte 1 (Bits 7:0)
Set				
Get	F0012h			

Field Name	Bits	R/W	Default	Reset
Mute	31	R	1h	N/A (Hard-coded)
	Mute support: 1 = yes, 0 = no.			
Rsvd3	30:23	R	00h	N/A (Hard-coded)
	Reserved.			
StepSize	22:16	R	17h	N/A (Hard-coded)
	Size of each step in the gain range: 0 to 127 = .25dB to 32dB, in .25dB steps.			
Rsvd2	15	R	0h	N/A (Hard-coded)
	Reserved.			
NumSteps	14:8	R	03h	N/A (Hard-coded)
	Number of gains steps (number of possible settings - 1).			
Rsvd1	7	R	0h	N/A (Hard-coded)
	Reserved.			
Offset	6:0	R	03h	N/A (Hard-coded)
	Indicates which step is 0dB			

6.29.2. DigBeep (NID = 21h): OutAmpLeft

Reg	Byte 4 (Bits 31:24)	Byte 3 (Bits 23:16)	Byte 2 (Bits 15:8)	Byte 1 (Bits 7:0)
Set				3A0h
Get	BA000h			

Field Name	Bits	R/W	Default	Reset
Rsvd2	31:8	R	000000h	N/A (Hard-coded)
	Reserved.			

©2014 TEMPO SEMICONDCUTOR, INC..

Field Name	Bits	R/W	Default	Reset
Mute	7	RW	0h	POR - DAFG - ULR
	Amp mute: 1 = muted, 0 = not muted.			
Rsvd1	6:2	R	00h	N/A (Hard-coded)
	Reserved.			
Gain	1:0	RW	1h	POR - DAFG - ULR
	Amp gain step number (see OutAmpCap parameter pertaining to this widget).			

6.29.3. DigBeep (NID = 21h): PwrState

Reg	Byte 4 (Bits 31:24)	Byte 3 (Bits 23:16)	Byte 2 (Bits 15:8)	Byte 1 (Bits 7:0)
Set				705h
Get	F0500h			

Field Name	Bits	R/W	Default	Reset
Rsvd4	31:11	R	000000h	N/A (Hard-coded)
	Reserved.			
SettingsReset	10	R	1h	POR - DAFG - ULR
	Indicates if any persistent settings in this Widget have been reset. Cleared by PwrState 'Get', or a 'Set' to any Verb in this Widget.			
Rsvd3	9	R	0h	N/A (Hard-coded)
	Reserved.			
Error	8	R	0h	POR - DAFG - ULR
	Error indicator: 1 = cannot enter requested power state, 0 = no problem with requested power state.			
Rsvd2	7:6	R	0h	N/A (Hard-coded)
	Reserved.			
Act	5:4	R	3h	POR - DAFG - LR
	Actual power state of this widget.			
Rsvd1	3:2	R	0h	N/A (Hard-coded)
	Reserved.			

©2014 TEMPO SEMICONDCUTOR, INC..

Field Name	Bits	R/W	Default	Reset
Set	1:0	RW	0h	POR - DAFG - LR
	Current power state setting for this widget.			

6.29.4. DigBeep (NID = 21h): Gen

Reg	Byte 4 (Bits 31:24)	Byte 3 (Bits 23:16)	Byte 2 (Bits 15:8)	Byte 1 (Bits 7:0)
Set				70Ah
Get	F0A00h			

Field Name	Bits	R/W	Default	Reset
Rsvd	31:8	R	000000h	N/A (Hard-coded)
	Reserved.			
Divider	7:0	RW	00h	POR - DAFG - LR
	Enable internal PC-Beep generation. Divider == 00h disables internal PC Beep generation and enables normal operation of the codec. Divider != 00h generates the beep tone on all Pin Complexes that are currently configured as outputs. The HD Audio spec states that the beep tone frequency = (48kHz HD Audio SYNC rate) / (4*Divider), producing tones from 47 Hz to 12 kHz (logarithmic scale).			

6.29.5. SPDIFIn (NID = 22h): WCap

Reg	Byte 4 (Bits 31:24)	Byte 3 (Bits 23:16)	Byte 2 (Bits 15:8)	Byte 1 (Bits 7:0)
Set				
Get	F0009h			

Field Name	Bits	R/W	Default	Reset
Rsvd2	31:24	R	00h	N/A (Hard-coded)
	Reserved.			

©2014 TEMPO SEMICONDCUTOR, INC..

Field Name	Bits	R/W	Default	Reset
Type	23:20	R	1h	N/A (Hard-coded)
	Widget type: 0h = Out Converter 1h = In Converter 2h = Summing (Mixer) 3h = Selector (Mux) 4h = Pin Complex 5h = Power 6h = Volume Knob 7h = Beep Generator 8h-Eh = Reserved Fh = Vendor Defined			
Delay	19:16	R	4h	N/A (Hard-coded)
	Number of sample delays through widget.			
Rsvd1	15:12	R	0h	N/A (Hard-coded)
	Reserved.			
SwapCap	11	R	0h	N/A (Hard-coded)
	Left/right swap support: 1 = yes, 0 = no.			
PwrCntrl	10	R	1h	N/A (Hard-coded)
	Power state support: 1 = yes, 0 = no.			
Dig	9	R	1h	N/A (Hard-coded)
	Digital stream support: 1 = yes (digital), 0 = no (analog).			
ConnList	8	R	1h	N/A (Hard-coded)
	Connection list present: 1 = yes, 0 = no.			
UnSolCap	7	R	0h	N/A (Hard-coded)
	Unsolicited response support: 1 = yes, 0 = no.			
ProcWidget	6	R	0h	N/A (Hard-coded)
	Processing state support: 1 = yes, 0 = no.			
Stripe	5	R	0h	N/A (Hard-coded)
	Striping support: 1 = yes, 0 = no.			
FormatOvrd	4	R	1h	N/A (Hard-coded)
	Stream format override: 1 = yes, 0 = no.			
AmpParOvrd	3	R	1h	N/A (Hard-coded)
	Amplifier capabilities override: 1 = yes, no.			

©2014 TEMPO SEMICONDCUTOR, INC..

Field Name	Bits	R/W	Default	Reset
OutAmpPrsnt	2	R	0h	N/A (Hard-coded)
	Output amp present: 1 = yes, 0 = no.			
InAmpPrsnt	1	R	1h	N/A (Hard-coded)
	Input amp present: 1 = yes, 0 = no.			
Stereo	0	R	1h	N/A (Hard-coded)
	Stereo stream support: 1 = yes (stereo), 0 = no (mono).			

©2014 TEMPO SEMICONDCUTOR, INC..

6.30. SPDIFIn (NID = 22h): Cnvtr

Reg	Byte 4 (Bits 31:24)	Byte 3 (Bits 23:16)	Byte 2 (Bits 15:8)	Byte 1 (Bits 7:0)
Set			2h	
Get	A0000h			

Field Name	Bits	R/W	Default	Reset
Rsvd2	31:16	R	0000h	N/A (Hard-coded)
	Reserved.			
FrmtNonPCM	15	RW	0h	POR - DAFG - ULR
	Stream type: 1 = Non-PCM, 0 = PCM.			
FrmtSmplRate	14	RW	0h	POR - DAFG - ULR
	Sample base rate: 1 = 44.1kHz, 0 = 48kHz.			
SmplRateMultp	13:11	RW	0h	POR - DAFG - ULR
	Sample base rate multiple: 000b= x1 (48kHz/44.1kHz or less) 001b= x2 (96kHz/88.2kHz/32kHz) 010b= x3 (144kHz) 011b= x4 (192kHz/176.4kHz) 100b-111b Reserved			
SmplRateDiv	10:8	RW	0h	POR - DAFG - ULR
	Sample base rate divider: 000b= Divide by 1 (48kHz/44.1kHz) 001b= Divide by 2 (24kHz/20.05kHz) 010b= Divide by 3 (16kHz/32kHz) 011b= Divide by 4 (11.025kHz) 100b= Divide by 5 (9.6kHz) 101b= Divide by 6 (8kHz) 110b= Divide by 7 111b= Divide by 8 (6kHz)			
Rsvd1	7	R	0h	N/A (Hard-coded)
	Reserved.			
BitsPerSmpl	6:4	RW	3h	POR - DAFG - ULR
	Bits per sample: 000b= 8 bits 001b= 16 bits 010b= 20 bits 011b= 24 bits 100b= 32 bits 101b-111b= Reserved			

©2014 TEMPO SEMICONDCUTOR, INC..

Field Name	Bits	R/W	Default	Reset
NmbrChan	3:0	RW	1h	POR - DAFG - ULR
	Total number of channels in the stream assigned to this converter: 0000b-1111b= 1-16 channels.			

6.30.1. SPDIFIn (NID = 22h): PCMCap

Reg	Byte 4 (Bits 31:24)	Byte 3 (Bits 23:16)	Byte 2 (Bits 15:8)	Byte 1 (Bits 7:0)
Set				
Get	F000Ah			

Field Name	Bits	R/W	Default	Reset
Rsvd2	31:21	R	000h	N/A (Hard-coded)
	Reserved.			
B32	20	R	0h	N/A (Hard-coded)
	32 bit audio format support: 1 = yes, 0 = no.			
B24	19	R	1h	N/A (Hard-coded)
	24 bit audio format support: 1 = yes, 0 = no.			
B20	18	R	1h	N/A (Hard-coded)
	20 bit audio format support: 1 = yes, 0 = no.			
B16	17	R	1h	N/A (Hard-coded)
	16 bit audio format support: 1 = yes, 0 = no.			
B8	16	R	0h	N/A (Hard-coded)
	8 bit audio format support: 1 = yes, 0 = no.			
Rsvd1	15:12	R	0h	N/A (Hard-coded)
	Reserved.			
R12	11	R	0h	N/A (Hard-coded)
	384kHz rate support: 1 = yes, 0 = no.			
R11	10	R	1h	N/A (Hard-coded)
	192kHz rate support: 1 = yes, 0 = no.			
R10	9	R	0h	N/A (Hard-coded)
	176.4kHz rate support: 1 = yes, 0 = no.			

©2014 TEMPO SEMICONDCUTOR, INC..

Field Name	Bits	R/W	Default	Reset
R9	8	R	1h	N/A (Hard-coded)
	96kHz rate support: 1 = yes, 0 = no.			
R8	7	R	0h	N/A (Hard-coded)
	88.2kHz rate support: 1 = yes, 0 = no.			
R7	6	R	1h	N/A (Hard-coded)
	48kHz rate support: 1 = yes, 0 = no.			
R6	5	R	1h	N/A (Hard-coded)
	44.1kHz rate support: 1 = yes, 0 = no.			
R5	4	R	0h	N/A (Hard-coded)
	32kHz rate support: 1 = yes, 0 = no.			
R4	3	R	0h	N/A (Hard-coded)
	22.05kHz rate support: 1 = yes, 0 = no.			
R3	2	R	0h	N/A (Hard-coded)
	16kHz rate support: 1 = yes, 0 = no.			
R2	1	R	0h	N/A (Hard-coded)
	11.025kHz rate support: 1 = yes, 0 = no.			
R1	0	R	0h	N/A (Hard-coded)
	8kHz rate support: 1 = yes, 0 = no.			

6.30.2. SPDIFIn (NID = 22h): StreamCap

Reg	Byte 4 (Bits 31:24)	Byte 3 (Bits 23:16)	Byte 2 (Bits 15:8)	Byte 1 (Bits 7:0)
Set				
Get	F000Bh			

Field Name	Bits	R/W	Default	Reset
Rsvd	31:3	R	00000000h	N/A (Hard-coded)
	Reserved.			
AC3	2	R	1h	N/A (Hard-coded)
	AC-3 formatted data support: 1 = yes, 0 = no.			

©2014 TEMPO SEMICONDCUTOR, INC..

Field Name	Bits	R/W	Default	Reset
Float32	1	R	0h	N/A (Hard-coded)
	Float32 formatted data support: 1 = yes, 0 = no.			
PCM	0	R	1h	N/A (Hard-coded)
	PCM-formatted data support: 1 = yes, 0 = no.			

6.30.3. SPDIFIn (NID = 22h): ConLst

Reg	Byte 4 (Bits 31:24)	Byte 3 (Bits 23:16)	Byte 2 (Bits 15:8)	Byte 1 (Bits 7:0)
Set				
Get	F000Eh			

Field Name	Bits	R/W	Default	Reset
Rsvd	31:8	R	000000h	N/A (Hard-coded)
	Reserved.			
LForm	7	R	0h	N/A (Hard-coded)
	Connection list format: 1 = long-form (15-bit) NID entries, 0 = short-form (7-bit) NID entries.			
ConL	6:0	R	01h	N/A (Hard-coded)
	Number of NID entries in connection list.			

6.30.4. SPDIFIn (NID = 22h): ConLstEntry0

Reg	Byte 4 (Bits 31:24)	Byte 3 (Bits 23:16)	Byte 2 (Bits 15:8)	Byte 1 (Bits 7:0)
Set				
Get	F0200h			

Field Name	Bits	R/W	Default	Reset
ConL3	31:24	R	00h	N/A (Hard-coded)
	Unused list entry.			
ConL2	23:16	R	00h	N/A (Hard-coded)
	Unused list entry.			

©2014 TEMPO SEMICONDCUTOR, INC..

Field Name	Bits	R/W	Default	Reset
ConL1	15:8	R	00h	N/A (Hard-coded)
	Unused list entry.			
ConL0	7:0	R	24h	N/A (Hard-coded)
	Dig2Pin pin widget (0x24)			

6.30.5. SPDIFIn (NID = 22h): PwrState

Reg	Byte 4 (Bits 31:24)	Byte 3 (Bits 23:16)	Byte 2 (Bits 15:8)	Byte 1 (Bits 7:0)
Set				705h
Get	F0500h			

Field Name	Bits	R/W	Default	Reset
Rsvd4	31:11	R	000000h	N/A (Hard-coded)
	Reserved.			
SettingsReset	10	R	1h	POR - DAFG - ULR
	Indicates if any persistent settings in this Widget have been reset. Cleared by PwrState 'Get', or a 'Set' to any Verb in this Widget.			
Rsvd3	9	R	0h	N/A (Hard-coded)
	Reserved.			
Error	8	R	0h	POR - DAFG - ULR
	Error indicator: 1 = cannot enter requested power state, 0 = no problem with requested power state.			
Rsvd2	7:6	R	0h	N/A (Hard-coded)
	Reserved.			
Act	5:4	R	3h	POR - DAFG - LR
	Actual power state of this widget.			
Rsvd1	3:2	R	0h	N/A (Hard-coded)
	Reserved.			
Set	1:0	RW	3h	POR - DAFG - LR
	Current power state setting for this widget.			

©2014 TEMPO SEMICONDCUTOR, INC..

6.30.6. SPDIFIn (NID = 22h): CnvtrID

Reg	Byte 4 (Bits 31:24)	Byte 3 (Bits 23:16)	Byte 2 (Bits 15:8)	Byte 1 (Bits 7:0)
Set				706h
Get	F0600h			

Field Name	Bits	R/W	Default	Reset
Rsvd	31:8	R	000000h	N/A (Hard-coded)
	Reserved.			
Strm	7:4	RW	0h	POR - S&DAFG - LR - PS
	Stream ID: 0h = Converter "off", 1h-Fh = valid ID's.			
Ch	3:0	RW	0h	POR - S&DAFG - LR - PS
	Channel assignment ("Ch" and "Ch+1" assigned as a pair, for a stereo converter).			

6.30.7. SPDIFIn (NID = 22h): DigCnvtr

Reg	Byte 4 (Bits 31:24)	Byte 3 (Bits 23:16)	Byte 2 (Bits 15:8)	Byte 1 (Bits 7:0)
Set	73Fh	73Eh	70Eh	70Dh
Get	F0E00h / F0D00h			

Field Name	Bits	R/W	Default	Reset
Rsvd2	31:16	R	0000h	N/A (Hard-coded)
	Reserved.			
Rsvd1	15	R	0h	N/A (Hard-coded)
	Reserved.			
CC	14:8	R	00h	POR - DAFG - ULR
	CC: Category Code.			
L	7	R	0h	POR - DAFG - ULR
	L: Generation Level.			
PRO	6	R	0h	POR - DAFG - ULR
	PRO: Professional.			

©2014 TEMPO SEMICONDCUTOR, INC..

Field Name	Bits	R/W	Default	Reset
AUDIO	5	R	0h	POR - DAFG - ULR
	/AUDIO: Non-Audio.			
COPY	4	R	0h	POR - DAFG - ULR
	COPY: Copyright.			
PRE	3	R	0h	POR - DAFG - ULR
	PRE: Preemphasis.			
VCFG	2	R	0h	POR - DAFG - ULR
	VCFG: Validity Config.			
V	1	R	0h	POR - DAFG - ULR
	V: Validity.			
DigEn	0	RW	0h	POR - DAFG - ULR
	Digital enable: 1 = converter enabled, 0 = converter disable.			

6.30.8. SPDIFIn (NID = 22h): InAmpCap

Reg	Byte 4 (Bits 31:24)	Byte 3 (Bits 23:16)	Byte 2 (Bits 15:8)	Byte 1 (Bits 7:0)
Set				
Get	F000Dh			

Field Name	Bits	R/W	Default	Reset
Mute	31	R	1h	N/A (Hard-coded)
	Mute support: 1 = yes, 0 = no.			
Rsvd3	30:23	R	00h	N/A (Hard-coded)
	Reserved.			
StepSize	22:16	R	00h	N/A (Hard-coded)
	Size of each step in the gain range: 0 to 127 = .25dB to 32dB, in .25dB steps.			
Rsvd2	15	R	0h	N/A (Hard-coded)
	Reserved.			
NumSteps	14:8	R	00h	N/A (Hard-coded)
	Number of gains steps (number of possible settings - 1).			

©2014 TEMPO SEMICONDCUTOR, INC..

Field Name	Bits	R/W	Default	Reset
Rsvd1	7	R	0h	N/A (Hard-coded)
	Reserved.			
Offset	6:0	R	00h	N/A (Hard-coded)
	Indicates which step is 0dB			

6.30.9. SPDIFIn (NID = 22h): InAmpLeft

Reg	Byte 4 (Bits 31:24)	Byte 3 (Bits 23:16)	Byte 2 (Bits 15:8)	Byte 1 (Bits 7:0)
Set				360h
Get	B2000h			

Field Name	Bits	R/W	Default	Reset
Rsvd2	31:8	R	000000h	N/A (Hard-coded)
	Reserved.			
Mute	7	RW	0h	POR - DAFG - ULR
	Amp mute: 1 = muted, 0 = not muted.			
Rsvd1	6:0	R	00h	N/A (Hard-coded)
	Reserved.			

6.30.10. SPDIFIn (NID = 22h): InAmpRight

Reg	Byte 4 (Bits 31:24)	Byte 3 (Bits 23:16)	Byte 2 (Bits 15:8)	Byte 1 (Bits 7:0)
Set				350h
Get	B0000h			

Field Name	Bits	R/W	Default	Reset
Rsvd2	31:2	R	000000h	N/A (Hard-coded)
	Reserved.			
Mute	7	RW	0h	POR - DAFG - ULR
	Amp mute: 1 = muted, 0 = not muted.			
Rsvd1	6:0	RW	0h	N/A (Hard-coded)
	Reserved.			

©2014 TEMPO SEMICONDCUTOR, INC..

6.30.11. SPDIFIn (NID = 22h): VS

Reg	Byte 4 (Bits 31:24)	Byte 3 (Bits 23:16)	Byte 2 (Bits 15:8)	Byte 1 (Bits 7:0)
Set				7E0h
Get	FE000h			

Field Name	Bits	R/W	Default	Reset
Rsvd	31:2	R	000000h	N/A (Hard-coded)
	Reserved.			
RoundDis	1	RW	0h	POR - DAFG - ULR
	SPDIF Input rounding disable: 0 = rounding is enabled, 1 = rounding is disabled.			
LoLvSel	0	RW	0h	POR - DAFG - ULR
	SPDIF Input level select: 0 = standard level, 1 = low level (input buffer enabled.			

6.30.12. SPDIFIn (NID = 22h): Status

Reg	Byte 4 (Bits 31:24)	Byte 3 (Bits 23:16)	Byte 2 (Bits 15:8)	Byte 1 (Bits 7:0)
Set				7E8h
Get	FE800h			

Field Name	Bits	R/W	Default	Reset
RcvSmplRate	31:29	R	7h	POR - DAFG - ULR
	Received Sample Rate: 000b = 44.1kHz 001b = 48kHz 010b = 88.2kHz 011b = 96kHz 100b = 176.4kHz 101b = 192kHz 11Xb = Invalid Rate			
Rsvd2	28.26	R	0h	N/A (Hard-coded)
	Reserved.			

©2014 TEMPO SEMICONDCUTOR, INC..

Field Name	Bits	R/W	Default	Reset
OrigFS	25:22	R	0h	POR - DAFG - ULR
	Original Sample Rate (per IEC60958-3 spec): 0000b = Original sampling frequency not indicated 0001b = 192kHz 0010b = 12kHz 0011b = 176.4kHz 0100b = Reserved 0101b = 96kHz 0110b = 8kHz 0111b = 88.2kHz 1000b = 16kHz 1001b = 24kHz 1010b = 11.025kHz 1011b = 22.05kHz 1100b = 32kHz 1101b = 48khz 1110b = Reserved 1111b = 44.1kHz			
CA	21:20	R	0h	POR - DAFG - ULR
	Clock Accuracy (per IEC60958-3 spec): 00b = Level II 01b = Level I 10b = Level III 11b = Reserved			
FS	19:16	R	0h	POR - DAFG - ULR
	Sample Rate (per IEC60958-3 spec): 0000b = 44.1kHz 0001b = Original sampling frequency not indicated 0010b = 48kHz 0011b = 32kHz 0100b = 22.05kHz 0101b = Reserved 0110b = 24kHz 0111b = Reserved 1000b = 88.2kHz 1001b = Reserved 1010b = 96kHz 1011b = Reserved 1100b = 176.4kHz 1101b = Reserved 1110b = 192kHz 1111b = Reserved			
CN	15:12	R	0h	POR - DAFG - ULR
	Channel Number (per IEC60958-3 spec): 0000b = Do not take into account 0001b = Channel 1 (Left channel for stereo channel format) 0010b = Channel 2 (Right channel for stereo channel format) 0011b-1111b = Channel 3-15			

©2014 TEMPO SEMICONDCUTOR, INC..

Field Name	Bits	R/W	Default	Reset
SmplWrdL	11:9	R	0h	POR - DAFG - ULR
	Sample Word Length (per IEC60958-3 spec): 000b = Word length not indicated 001b = Max length - 4 010b = Max length - 2 011b = Reserved 100b = Max length - 1 101b = Max length - 0 110b = Max length - 3 111b = Reserved			
MaxWrdL	8	R	0h	POR - DAFG - ULR
	Max Word Length (per IEC60958-3 spec): 0 = 20 bits, 1 = 24 bits.			
NoBlkChk	7	RW	0h	POR - DAFG - ULR
	Disable Sample Block Checking.			
Rsvd	6:5	R	0h	N/A (Hard-coded)
	Reserved.			
ParityLimit	4:3	RW	0h	POR - DAFG - ULR
	SPDIFIn Parity Limit (DPLL loses lock when the set number of parity errors per block is detected): 00b = 4 Parity errors 01b = 3 Parity errors 10b = 2 Parity errors 11b = 1 Parity error			
SPRun	2	R	0h	POR - DAFG - ULR
	SPDIFIn Running 0 = no signal on SPDIFIn Pin, 1 = Signal on SPDIFIn pin.			
SiPerr	1	RW	0h	POR - DAFG - ULR
	SPDIFIn Parity Error: 0 = No error detected, 1 = Error detected (write 0 to clear). Not affected by ParityLimit.			
CopyInv	0	RW	0h	POR - DAFG - ULR
	Copyright Invert: 0 = Do not invert COPY bit, 1 = Invert COPY bit.			

©2014 TEMPO SEMICONDCUTOR, INC..

6.33. NID = 23h Reserved

©2014 TEMPO SEMICONDCUTOR, INC..

6.32. Dig2Pin (NID = 24h): WCap

Reg	Byte 4 (Bits 31:24)	Byte 3 (Bits 23:16)	Byte 2 (Bits 15:8)	Byte 1 (Bits 7:0)
Set				
Get	F0009h			

Field Name	Bits	R/W	Default	Reset
Rsvd2	31:24	R	00h	N/A (Hard-coded)
	Reserved.			
Type	23:20	R	0h	N/A (Hard-coded)
	Widget type: 0h = Out Converter 1h = In Converter 2h = Summing (Mixer) 3h = Selector (Mux) 4h = Pin Complex 5h = Power 6h = Volume Knob 7h = Beep Generator 8h-Eh = Reserved Fh = Vendor Defined			
Delay	19:16	R	0h	N/A (Hard-coded)
	Number of sample delays through widget.			
Rsvd1	15:12	R	0h	N/A (Hard-coded)
	Reserved.			
SwapCap	11	R	1h	N/A (Hard-coded)
	Left/right swap support: 1 = yes, 0 = no.			
PwrCntrl	10	R	1h	N/A (Hard-coded)
	Power state support: 1 = yes, 0 = no.			
Dig	9	R	1h	N/A (Hard-coded)
	Digital stream support: 1 = yes (digital), 0 = no (analog).			
ConnList	8	R	0h	N/A (Hard-coded)
	Connection list present: 1 = yes, 0 = no.			
UnSolCap	7	R	1h	N/A (Hard-coded)
	Unsolicited response support: 1 = yes, 0 = no.			

©2014 TEMPO SEMICONDCUTOR, INC..

Field Name	Bits	R/W	Default	Reset
ProcWidget	6	R	0h	N/A (Hard-coded)
	Processing state support: 1 = yes, 0 = no.			
Stripe	5	R	0h	N/A (Hard-coded)
	Striping support: 1 = yes, 0 = no.			
FormatOvrd	4	R	0h	N/A (Hard-coded)
	Stream format override: 1 = yes, 0 = no.			
AmpParOvrd	3	R	0h	N/A (Hard-coded)
	Amplifier capabilities override: 1 = yes, no.			
OutAmpPrsnt	2	R	0h	N/A (Hard-coded)
	Output amp present: 1 = yes, 0 = no.			
InAmpPrsnt	1	R	0h	N/A (Hard-coded)
	Input amp present: 1 = yes, 0 = no.			
Stereo	0	R	1h	N/A (Hard-coded)
	Stereo stream support: 1 = yes (stereo), 0 = no (mono).			

6.32.1. Dig2Pin (NID = 24h): PinCap

Reg	Byte 4 (Bits 31:24)	Byte 3 (Bits 23:16)	Byte 2 (Bits 15:8)	Byte 1 (Bits 7:0)
Set				
Get	F000Ch			

Field Name	Bits	R/W	Default	Reset
Rsvd2	31:17	R	0000h	N/A (Hard-coded)
	Reserved.			
EapdCap	16	R	00h	N/A (Hard-coded)
	EAPD support: 1 = yes, 0 = no.			

©2014 TEMPO SEMICONDCUTOR, INC..

Field Name	Bits	R/W	Default	Reset
VrefCntrl	15:8	RW	0h	N/A (Hard-coded)
	Vref support: bit 7 = Reserved bit 6 = Reserved bit 5 = 100% support (1 = yes, 0 = no) bit 4 = 80% support (1 = yes, 0 = no) bit 3 = Reserved bit 2 = GND support (1 = yes, 0 = no) bit 1 = 50% support (1 = yes, 0 = no) bit 0 = Hi-Z support (1 = yes, 0 = no)			
Rsvd1	7	R	0h	N/A (Hard-coded)
	Reserved.			
BalancedIO	6	R	0h	N/A (Hard-coded)
	Balanced I/O support: 1 = yes, 0 = no			
InCap	5	R	1h	N/A (Hard-coded)
	Input support: 1 = yes, 0 = no			
OutCap	4	R	0h	N/A (Hard-coded)
	Output support: 1 = yes, 0 = no.			
HdphDrvCap	3	R	0h	N/A (Hard-coded)
	Headphone amp present: 1 = yes, 0 = no			
PresDtctCap	2	R	1h	N/A (Hard-coded)
	Presence detection support: 1 = yes, 0 = no.			
TrigRqd	1	R	0h	N/A (Hard-coded)
	Trigger required for impedance sense: 1 = yes, 0 = no			
ImpSenseCap	0	R	0h	N/A (Hard-coded)
	Impedance sense support: 1 = yes, 0 = no			

6.32.2. Dig2Pin (NID = 24h): PwrState

Reg	Byte 4 (Bits 31:24)	Byte 3 (Bits 23:16)	Byte 2 (Bits 15:8)	Byte 1 (Bits 7:0)
Set				705h
Get	F0500h			

©2014 TEMPO SEMICONDCUTOR, INC..

Field Name	Bits	R/W	Default	Reset
Rsvd4	31:11	R	000000h	N/A (Hard-coded)
	Reserved.			
SettingsReset	10	R	1h	POR - DAFG - ULR
	Indicates if any persistent settings in this Widget have been reset. Cleared by PwrState 'Get', or a 'Set' to any Verb in this Widget.			
Rsvd3	9	R	0h	N/A (Hard-coded)
	Reserved.			
Error	8	R	0h	POR - DAFG - ULR
	Error indicator: 1 = cannot enter requested power state, 0 = no problem with requested power state.			
Rsvd2	7:6	R	0h	N/A (Hard-coded)
	Reserved.			
Act	5:4	R	3h	POR - DAFG - ULR
	Actual power state of this widget.			
Rsvd1	3:2	R	0h	N/A (Hard-coded)
	Reserved.			
Set	1:0	RW	0h	POR - DAFG - ULR
	Current power state setting for this widget.			

Dig2Pin (NID = 24h): PinWCntrl

Reg	Byte 4 (Bits 31:24)	Byte 3 (Bits 23:16)	Byte 2 (Bits 15:8)	Byte 1 (Bits 7:0)
Set				707h
Get	F0700h			

Field Name	Bits	R/W	Default	Reset
Rsvd2	31:7	R	000000h	N/A (Hard-coded)
	Reserved.			
OutEn	6	R	0h	POR - DAFG - ULR
	Output enable: 1 = enabled, 0 = disabled.			

©2014 TEMPO SEMICONDCUTOR, INC..

Field Name	Bits	R/W	Default	Reset
InEn	5	RW	0h	POR - DAFG - ULR
	Input enable: 1 = enabled, 0 = disabled			
Rsvd1	4:0	R	0h	N/A (Hard-coded)
	Reserved.			

6.32.3. Dig2Pin (NID = 24h): UnsolResp

Reg	Byte 4 (Bits 31:24)	Byte 3 (Bits 23:16)	Byte 2 (Bits 15:8)	Byte 1 (Bits 7:0)
Set				708h
Get	F0800h			

Field Name	Bits	R/W	Default	Reset
Rsvd2	31:8	R	000000h	N/A (Hard-coded)
	Reserved.			
En	7	RW	0h	POR - DAFG - ULR
	Unsolicited response enable (also enables Wake events for this Widget): 1 = enabled, 0 = disabled.			
Rsvd1	6	R	0h	N/A (Hard-coded)
	Reserved.			
Tag	5:0	RW	00h	POR - DAFG - ULR
	Software programmable field returned in top six bits (31:26) of every Unsolicited Response generated by this node.			

6.32.4. Dig2Pin (NID = 24h): ChSense

Reg	Byte 4 (Bits 31:24)	Byte 3 (Bits 23:16)	Byte 2 (Bits 15:8)	Byte 1 (Bits 7:0)
Set				709h
Get	F0900h			

©2014 TEMPO SEMICONDCUTOR, INC..

Field Name	Bits	R/W	Default	Reset
PresDtct	31	R	0h	POR
	Presence detection indicator: 1 = presence detected; 0 = presence not detected.			
Rsvd	30:0	R	00000000h	N/A (Hard-coded)
	Reserved.			

6.32.5. Dig2Pin (NID = 24h): ConfigDefault

Reg	Byte 4 (Bits 31:24)	Byte 3 (Bits 23:16)	Byte 2 (Bits 15:8)	Byte 1 (Bits 7:0)
Set	71Fh	71Eh	71Dh	71Ch
Get	F1F00h / F1E00h / F1D00h / F1C00h			

Field Name	Bits	R/W	Default	Reset
PortConnectivity	31:30	RW	0h	POR
	Port connectivity: 0h = Port complex is connected to a jack 1h = No physical connection for port 2h = Fixed function device is attached 3h = Both jack and internal device attached (info in all other fields refers to integrated device, any presence detection refers to jack)			
Location	29:24	RW	01h	POR
	Location Bits [5..4]: 0h = External on primary chassis 1h = Internal 2h = Separate chassis 3h = Other Bits [3..0]: 0h = N/A 1h = Rear 2h = Front 3h = Left 4h = Right 5h = Top 6h = Bottom 7h-9h = Special Ah-Fh = Reserved			

©2014 TEMPO SEMICONDCUTOR, INC..

Field Name	Bits	R/W	Default	Reset
Device	23:20	RW	Ch	POR
	Default device: 0h = Line out 1h = Speaker 2h = HP out 3h = CD 4h = SPDIF Out 5h = Digital other out 6h = Modem line side 7h = Modem handset side 8h = Line in 9h = Aux Ah = Mic in Bh = Telephony Ch = SPDIF In Dh = Digital other in Eh = Reserved Fh = Other			
ConnectionType	19:16	RW	5h	POR
	Connection type: 0h = Unknown 1h = 1/8"" stereo/mono 2h = 1/4"" stereo/mono 3h = ATAPI internal 4h = RCA 5h = Optical 6h = Other digital 7h = Other analog 8h = Multichannel analog (DIN) 9h = XLR/Professional Ah = RJ-11 (modem) Bh = Combination Ch-Eh = Reserved Fh = Other			

©2014 TEMPO SEMICONDCUTOR, INC..

Field Name	Bits	R/W	Default	Reset
Color	15:12	RW	2h	POR
	Color: 0h = Unknown 1h = Black 2h = Grey 3h = Blue 4h = Green 5h = Red 6h = Orange 7h = Yellow 8h = Purple 9h = Pink Ah-Dh = Reserved Eh = White Fh = Other			
Misc	11:8	RW	0h	POR
	Miscellaneous: Bits [3..1] = Reserved Bit 0 = Jack detect override			
Association	7:4	RW	7h	POR
	Default assocation.			
Sequence	7:4	RW	0h	POR
	Sequence.			

©2014 TEMPO SEMICONDCUTOR, INC..

7. PINOUTS AND PACKAGE INFORMATION

7.1. 48-Pin Pinout

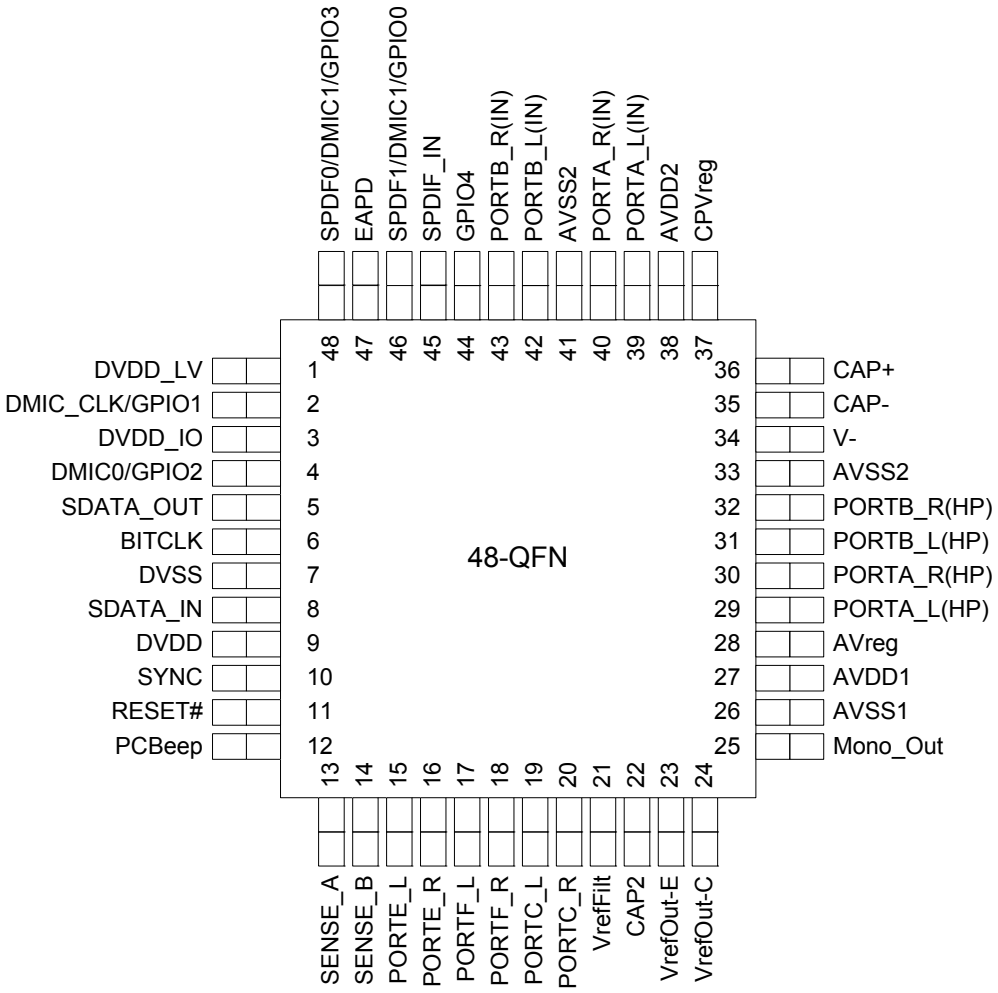

Figure 14. 48-Pin Pinout

©2014 TEMPO SEMICONDCUTOR, INC..

7.2. 40-Pin Pinout

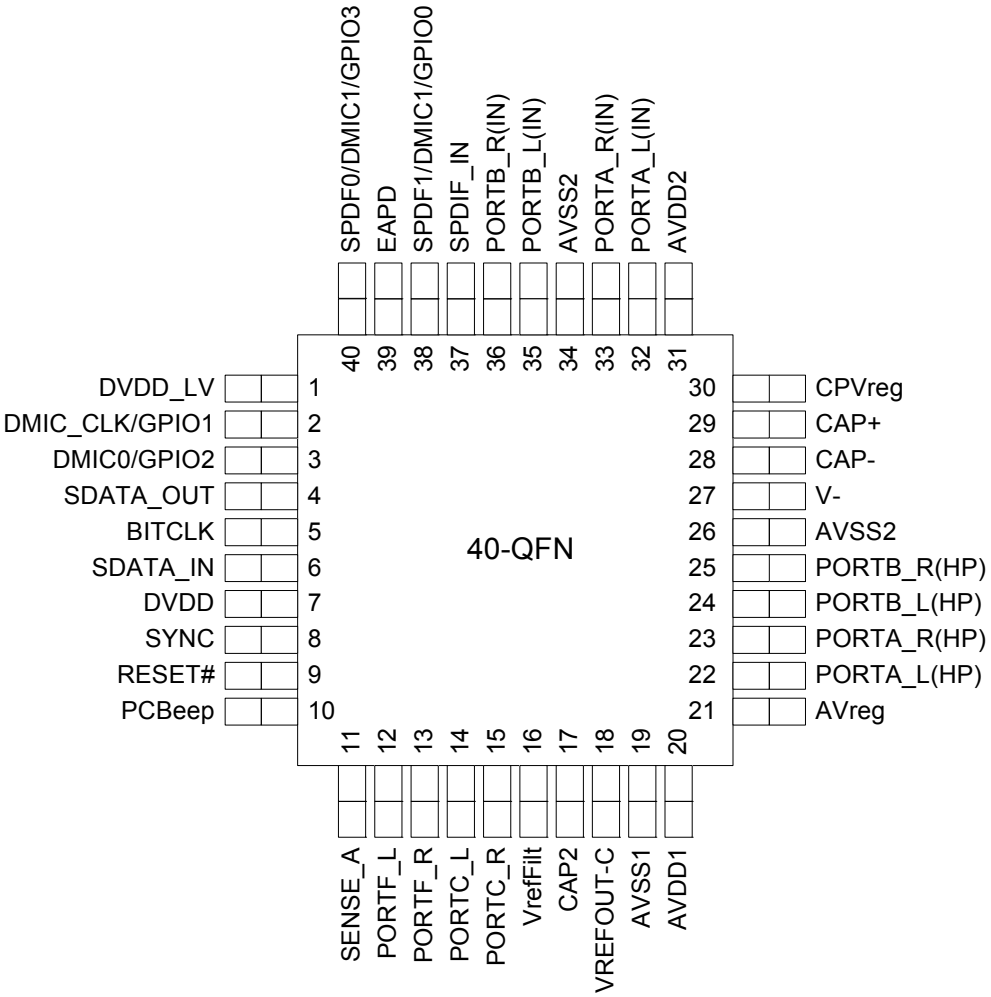

Figure 15. 40-Pin Pinout

©2014 TEMPO SEMICONDCUTOR, INC..

7.3. Pin Table for 48-Pin

Pin Name	Pin Function	I/O	Internal Pull-up Pull-down	QFN location
DVDD_LV	1.5V Digital Core Regulator Filter Cap	O(Power)	None	1
DMIC_CLK/GPIO1	Digital Mic Clock Output/GPIO1	I/O(Digital)	60K Pull-down	2
DVDD_IO	Reference Voltage (1.5V or 3.3V)	I(Power)	None	3
DMIC0/GPIO2	Digital Mic 01 Input/GPIO2	I/O(Digital)	60K Pull-down	4
SDATA_OUT	HD Audio Serial Data output from controller	I(Digital)	None	5
BITCLK	HD Audio Bit Clock	I(Digital)	None	6
DVSS	Digital Ground	I(Digital)	None	7
SDATA_IN	HD Audio Serial Data Input to controller	I/O(Digital)	None	8
DVDD	Digital Vdd= 3.3V	I(Power)	None	9
SYNC	HD Audio Frame Sync	I(Digital)	None	10
RESET#	HD Audio Reset	I(Digital)	None	11
PCBeep	PC Beep Input	I(Analog)	None	12
SENSE_A	Jack insertion detection	I(Analog)	None	13
SENSE_B	Jack insertion detection	I(Analog)	None	14
PORTE_L	Port E Left	I/O(Analog)	None	15
PORTE_R	Port E Right	I/O(Analog)	None	16
PORTF_L	Port F Left	I/O(Analog)	None	17
PORTF_R	Port F Right	I/O(Analog)	None	18
PORTC_L	Port C Left	I/O(Analog)	None	19
PORTC_R	Port C Right	I/O(Analog)	None	20
VREFFILT	Analog Virtual Ground	O(Analog)	None	21
CAP 2	ADC reference bypass capacitor	O(Analog)	None	22
VREFOUT-E	Reference Voltage out (for mic bias)	O(Analog)	None	23
VREFOUT-C	Reference Voltage out (for mic bias)	O(Analog)	None	24
Mono_Out	Mono output port	O(Analog)	None	25
AVSS1	Analog Ground	I(Analog)	None	26
AVDD1	Analog Vdd=5.0V	I(Analog)	None	27
AVreg	Analog Core LDO decoupling cap	O(Analog)	None	28
PORTA_L (HP)	Port A Output Left	O(Analog)	None	29
PORTA_R (HP)	Port A Output Right	O(Analog)	None	30
PORTB_L (HP)	Port B Output Left	O(Analog)	None	31
PORTB_R (HP)	Port B Output Right	O(Analog)	None	32
AVSS2	Analog Ground	I(Analog)	None	33
V-	Charge-pump negative output	O(Analog)	None	34
CAP-	Charge-pump flying cap -	I(Analog)	None	35
CAP+	Charge-pump flying cap +	O(Analog)	None	36

Table 25. 48-PinTable

©2014 TEMPO SEMICONDCUTOR, INC..

Pin Name	Pin Function	I/O	Internal Pull-up Pull-down	QFN location
CPVreg	Charge-pump LDO decoupling cap	O(Analog)	None	37
AVDD2	Analog Supply for VREG	I(Power)	None	38
PORTA_L (IN)	Port A Left Input	I(Analog)	None	39
PORTA_R (IN)	Port A Right Input	I(Analog)	None	40
AVSS2	Analog Ground	I(Power)	None	41
PORTB_L(IN)	Port B Left Input	I(Analog)	None	42
PORTB_R(IN)	Port B Right Input	I(Analog)	None	43
GPIO 4	General purpose I/O	I/O (Digital)	60K Pull-Down	44
SPDIFIN	SPDIF Input	I(Digital)	60K Pull-Down	45
SPDF1/GPIO0/ DMIC1	SPDIF 0utput, GPIO0, Digital microphone input	I/O(Digital)	60K Pull-Down	46
EAPD	External Amplifier Power Down (active low)	I/O(Digital)	60K Pull-Up	47
SPDF0/GPIO3/ DMIC1	SPDIF 0utput, GPIO3, Digital microphone input	I/O(Digital)	60K Pull-Down	48

Table 25. 48-PinTable

7.4. Pin Table for 40-Pin

Pin Name	Pin Function	I/O	Internal Pull-up Pull-down	QFN location
DVDD_LV	1.5V Digital Core Regulator Filter Cap	O(Power)	None	1
DMIC_CLK/GPIO1	Digital Microphone clock output or GPIO 1	I/O(Digital)	60K Pull-Down	2
DMIC0/GPIO2	Digital Microphone data input or GPIO 2	I/O(Digital)	60K Pull-Down	3
SDATA_OUT	HD Audio Serial Data output from controller	I(Digital)	None	4
BITCLK	HD Audio Bit Clock	I(Digital)	None	5
SDATA_IN	HD Audio Serial Data Input to controller	I/O(Digital)	None	6
DVDD	Digital Vdd= 3.3V	I(Power)	None	7
SYNC	HD Audio Frame Sync	I(Digital)	None	8
RESET#	HD Audio Reset	I(Digital)	None	9
PCBeep	PC Beep input	I(Analog)	None	10
SENSE_A	Jack insertion detection	I(Analog)	None	11
PORTF_L	Port F Left	I/O(Analog)	None	12
PORTF_R	Port F Right	I/O(Analog)	None	13
PORTC_L	Port C Left	I/O(Analog)	None	14
PORTC_R	Port C Right	I/O(Analog)	None	15
VREFFILT	Analog Virtual Ground	O(Analog)	None	16
CAP 2	ADC reference bypass capacitor	O(Analog)	None	17

Table 26. 40-Pin Table

©2014 TEMPO SEMICONDCUTOR, INC..

Pin Name	Pin Function	I/O	Internal Pull-up Pull-down	QFN location
VREFOUT-C	Reference Voltage out drive (intended for mic bias)	O(Analog)	None	18
AVSS1	Analog Ground	I(Power)	None	19
AVDD1	Analog Vdd=5.0V or 3.3V	I(Analog)	None	20
AVreg	Analog Core LDO decoupling cap	O(Analog)	None	21
PORTA_L (HP)	Port A Output Left	O(Analog)	None	22
PORTA_R (HP)	Port A Output Right	O(Analog)	None	23
PORTB_L (HP)	Port B Output Left	O(Analog)	None	24
PORTB_R (HP)	Port B Output Right	O(Analog)	None	25
AVSS2	Analog Ground	I(Power)	None	26
V-	Charge-pump negative output	O(Analog)	None	27
CAP-	Charge-pump flying cap -	I(Analog)	None	28
CAP+	Charge-pump flying cap +	O(Analog)	None	29
CPVreg	Charge-pump LDO decoupling cap	I(Analog)	None	30
AVDD2	Analog Supply for VREG	I(Power)	None	31
PORTA_L(IN)	Port A Left Input	I(Analog)	None	32
PORTA_R(IN)	Port ARight Input	I(Analog)	None	33
AVSS2	Analog Ground	I(Power)	None	34
PORTB_L(IN)	Port B Left Input	I(Analog)	None	35
PORTB_R(IN)	Port B Right Input	I(Analog)	None	36
SPDIFIN	SPDIF Input	I (Digital)	60K Pull-Down	37
SPDF1/GPIO0/ DMIC1	SPDIF output, GPIO0, or digital microphone input	I/O(Digital)	60K Pull-Down	38
EAPD	External Amplifier Power-Down (active low)	I/O(Digital)	60K Pull-Up	39
SPDF0/GPIO3/ DMIC1	SPDIF output, GPIO3, or digital microphone input	I/O(Digital)	60K Pull-Down	40

Table 26. 40-Pin Table

©2014 TEMPO SEMICONDCUTOR, INC..

7.5. 48QFN Package Outline and Package Dimensions

Package dimensions are kept current with JEDEC Publication No. 95

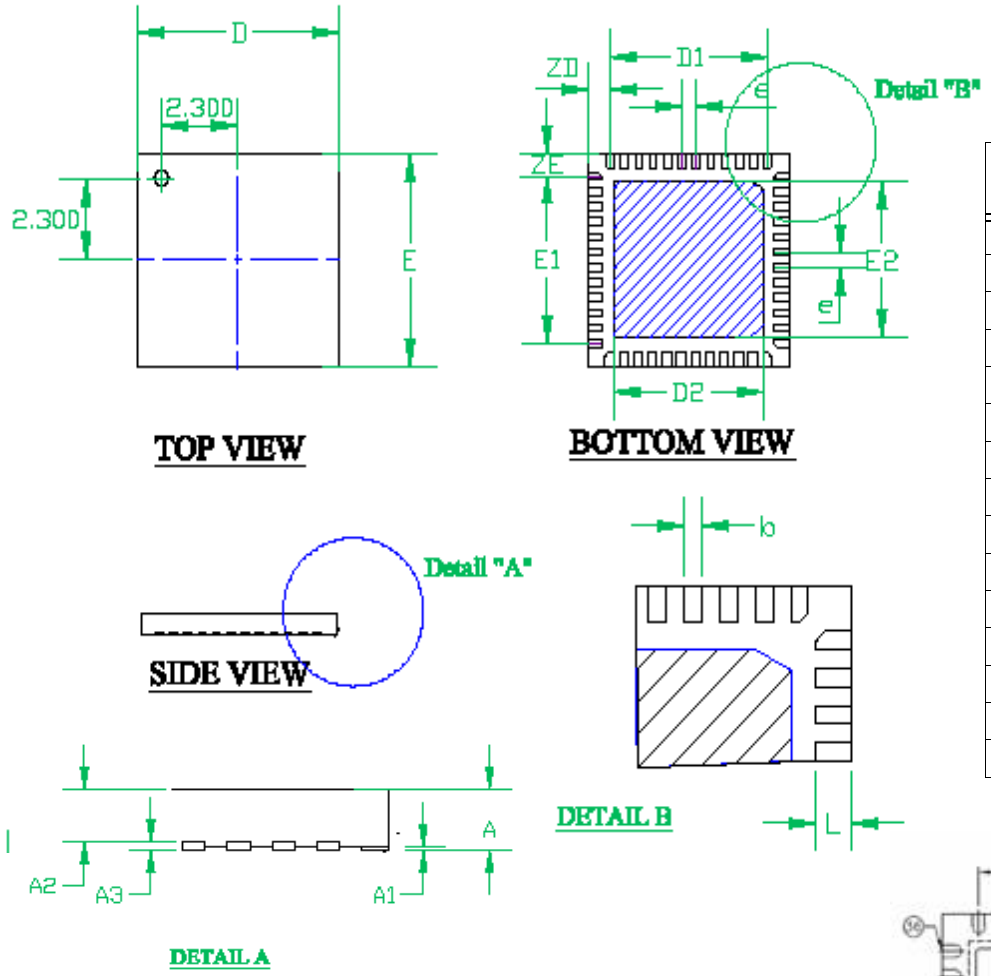

Key	QFN Dimensions in mm		
	Min	Nom	Max
A	0.80	0.90	1.0
A1	0.00	0.02	0.05
A3		0.20 REF	
D		7.00 BSC	
D1		5.50 BSC	
E		7.00 BSC	
E1		5.50 BSC	
L	0.35	0.40	0.45
e		0.50 BSC	
R		0.20-0.25	
b	0.18	0.25	0.30
D2	5.50	5.65	5.80
E2	5.50	5.65	5.80
ZD		0.75 BSC	
ZE		0.75 BSC	

Additional Approved Option

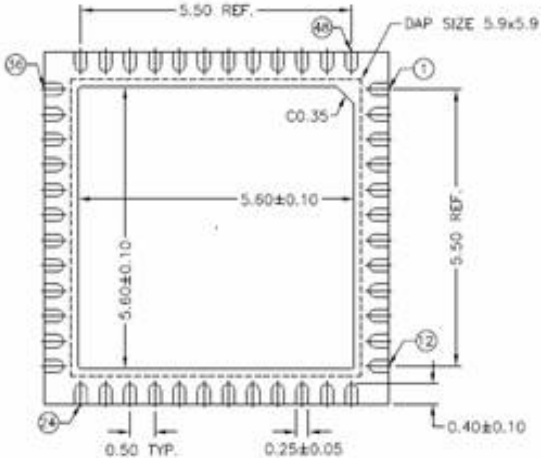

Figure 16. 48QFN Package Diagram

©2014 TEMPO SEMICONDCUTOR, INC..

7.6. 40QFN Package Outline and Package Dimensions

Package dimensions are kept current with JEDEC Publication No. 95

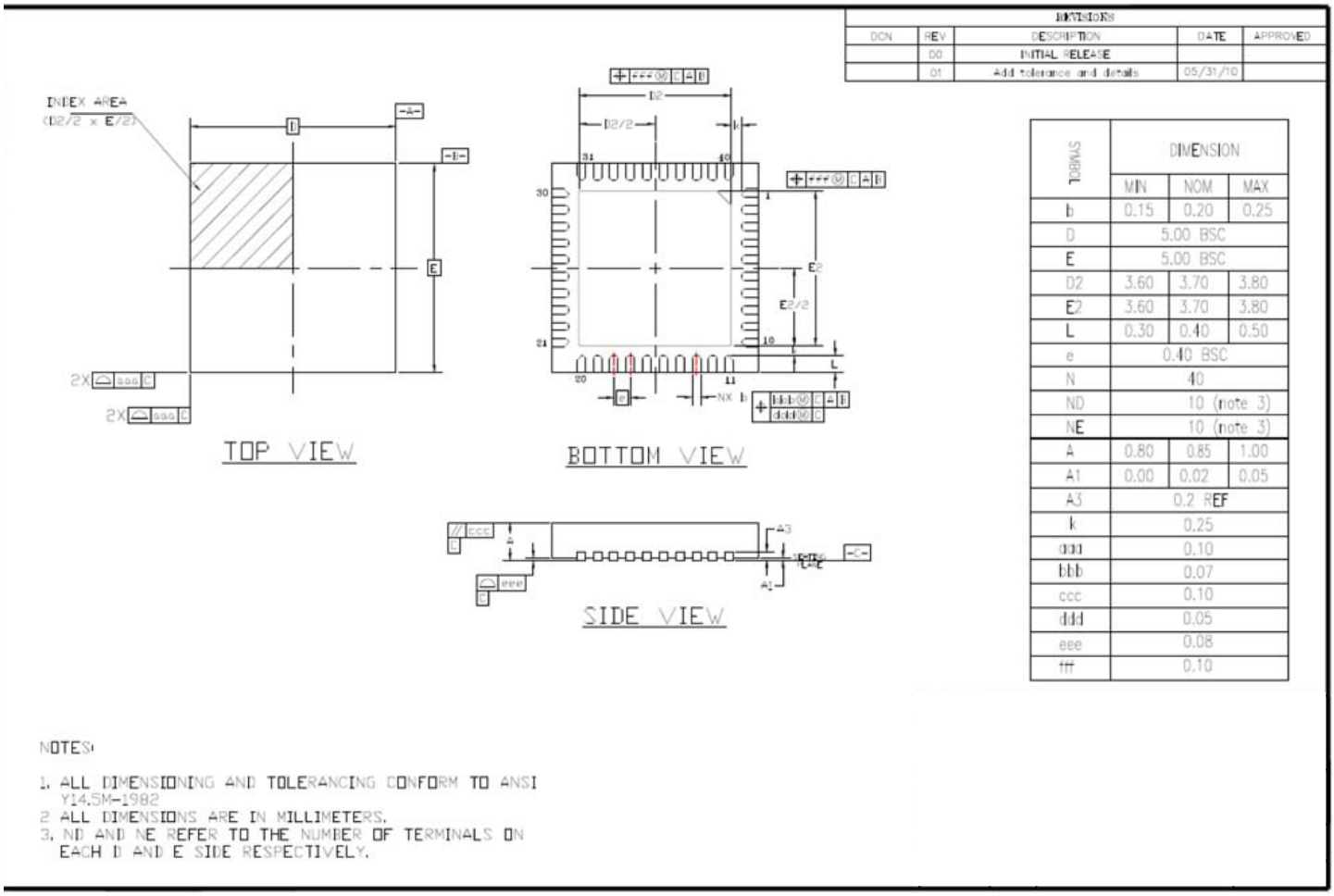

SYMBOL	DIMENSION		
	MIN	NOM	MAX
b	0.15	0.20	0.25
D	5.00 BSC		
E	5.00 BSC		
D2	3.60	3.70	3.80
E2	3.60	3.70	3.80
L	0.30	0.40	0.50
e	0.40 BSC		
N	40		
ND	10 (note 3)		
NE	10 (note 3)		
A	0.80	0.85	1.00
A1	0.00	0.02	0.05
A3	0.2 REF		
k	0.25		
aaa	0.10		
bbb	0.07		
ccc	0.10		
ddd	0.05		
eee	0.08		
fff	0.10		

Figure 17. 40QFN Package Diagram

7.7. Pb Free Process- Package Classification Reflow Temperatures

Package Thickness	Volume mm^3 <350	Volume mm^3 350 - 2000	Volume mm^3 >2000
<1.6mm	260 + 0 ^oC*	260 + 0 ^oC*	260 + 0 ^oC*
1.6mm - 2.5mm	260 + 0 ^oC*	250 + 0 ^oC*	245 + 0 ^oC*
> or = 2.5mm	250 + 0 ^oC*	245 + 0 ^oC*	245 + 0 ^oC*
*Tolerance: The device manufacturer/supplier shall assure process compatibility up to and including the stated classification temperature (this means Peak reflow temperature +0 ^oC. For example 260 ^oC+0 ^oC) at the rated MSL level.			

Table 27. Reflow

Note: TSI's package thicknesses are <2.5mm and <350 mm^3, so 260 applies in every case.

©2014 TEMPO SEMICONDCUTOR, INC..

8. DISCLAIMER

While the information presented herein has been checked for both accuracy and reliability, manufacturer assumes no responsibility for either its use or for the infringement of any patents or other rights of third parties, which would result from its use. No other circuits, patents, or licenses are implied. This product is intended for use in normal commercial applications. Any other applications, such as those requiring extended temperature range, high reliability, or other extraordinary environmental requirements, are not recommended without additional processing by manufacturer. Manufacturer reserves the right to change any circuitry or specifications without notice. Manufacturer does not authorize or warrant any product for use in life support devices or critical medical instruments.

©2014 TEMPO SEMICONDCUTOR, INC..

9. DOCUMENT REVISION HISTORY

Revision	Date	Description of Change
0.5	November 2010	Initial release
0.6	March 2011	Pin out and package changes
0.7	April 2011	Added 3.3V AVDD options, part numbers, device ID and electrical/performance characteristics. Pin defaults and combo jack description added. Corrected MonoMux and Mono/Mix in 40QFN package to VSW in widget list.
0.8	July 2011	Corrected pin numbers for ports A&D in table 1 port functionality. Clarified Mono Output and digital mic description text. Corrected Jack detect sense resistor.
0.85	August 2011	Updated minimum values with typical performance values on analog performance.
0.90	October 2011	Added widget details
0.91	October 2011	ZB silicon default value changed from 5h to 6h in the AFG: AnaCapless VRegSel (bits 27:24). Added PVdd max value to electrical characteristics section. Corrected WLCSP column in pinout tables, there is no WLCSP option for this device.
1.0	February 2012	Removed Preliminary status.
1.1	May 2012	Correct functional block diagram for SPDIF I/O data and pin numbers, correct Port Pin numbers
1.2	Septmeber 2014	Released in TSI format

www.temposemi.com
8627 N. MoPac Expwy Suite 130
Austin, Texas 78759

DISCLAIMER Tempo Semiconductor, Inc. (TSI) and its subsidiaries reserve the right to modify the products and/or specifications described herein at any time and at TSI's sole discretion. All information in this document, including descriptions of product features and performance, is subject to change without notice. Performance specifications and the operating parameters of the described products are determined in the independent state and are not guaranteed to perform the same way when installed in customer products. The information contained herein is provided without representation or warranty of any kind, whether express or implied, including, but not limited to, the suitability of TSI's products for any particular purpose, an implied warranty of merchantability, or non-infringement of the intellectual property rights of others. This document is presented only as a guide and does not convey any license under intellectual property rights of TSI or any third parties.

TSI's products are not intended for use in life support systems or similar devices where the failure or malfunction of an TSI product can be reasonably expected to significantly affect the health or safety of users. Anyone using an TSI product in such a manner does so at their own risk, absent an express, written agreement by TSI.

Tempo Semiconductor, TSI and the TSI logo are registered trademarks of TSI. Other trademarks and service marks used herein, including protected names, logos and designs, are the property of TSI or their respective third party owners.

Copyright 2014. All rights reserved.

OCEAN CHIPS
Океан Электроники
Поставка электронных компонентов

Компания «Океан Электроники» предлагает заключение долгосрочных отношений при поставках импортных электронных компонентов на взаимовыгодных условиях!

Наши преимущества:

- Поставка оригинальных импортных электронных компонентов напрямую с производств Америки, Европы и Азии, а так же с крупнейших складов мира;
- Широкая линейка поставок активных и пассивных импортных электронных компонентов (более 30 млн. наименований);
- Поставка сложных, дефицитных, либо снятых с производства позиций;
- Оперативные сроки поставки под заказ (от 5 рабочих дней);
- Экспресс доставка в любую точку России;
- Помощь Конструкторского Отдела и консультации квалифицированных инженеров;
- Техническая поддержка проекта, помощь в подборе аналогов, поставка прототипов;
- Поставка электронных компонентов под контролем ВП;
- Система менеджмента качества сертифицирована по Международному стандарту ISO 9001;
- При необходимости вся продукция военного и аэрокосмического назначения проходит испытания и сертификацию в лаборатории (по согласованию с заказчиком);
- Поставка специализированных компонентов военного и аэрокосмического уровня качества (Xilinx, Altera, Analog Devices, Intersil, Interpoint, Microsemi, Actel, Aeroflex, Peregrine, VPT, Syfer, Eurofarad, Texas Instruments, MS Kennedy, Miteq, Cobham, E2V, MA-COM, Hittite, Mini-Circuits, General Dynamics и др.);

Компания «Океан Электроники» является официальным дистрибьютором и эксклюзивным представителем в России одного из крупнейших производителей разъемов военного и аэрокосмического назначения **«JONHON»**, а так же официальным дистрибьютором и эксклюзивным представителем в России производителя высокотехнологичных и надежных решений для передачи СВЧ сигналов **«FORSTAR»**.

AVIC JONHON

«JONHON» (основан в 1970 г.)

Разъемы специального, военного и аэрокосмического назначения:

(Применяются в военной, авиационной, аэрокосмической, морской, железнодорожной, горно- и нефтедобывающей отраслях промышленности)

«FORSTAR» (основан в 1998 г.)

ВЧ соединители, коаксиальные кабели, кабельные сборки и микроволновые компоненты:

(Применяются в телекоммуникациях гражданского и специального назначения, в средствах связи, РЛС, а так же военной, авиационной и аэрокосмической отраслях промышленности).

FORSTAR®

Телефон: 8 (812) 309-75-97 (многоканальный)
Факс: 8 (812) 320-03-32
Электронная почта: ocean@oceanchips.ru
Web: http://oceanchips.ru/
Адрес: 198099, г. Санкт-Петербург, ул. Калинина, д. 2, корп. 4, лит. А