Dual PLL Precision Synthesizer

Data Sheet **AD9578**

FEATURES

- Any output frequency precision synthesis
  - 11.8 MHz to 919 MHz
  - Better than 0.1 ppb frequency resolution
- Ultralow rms jitter (12 kHz to 20 MHz)
  - <300 fs rms using integer synthesis
  - <405 fs rms using fractional synthesis
- Dual reference inputs support LVPECL, LVDS, 1.8 V LVCMOS, or fundamental mode AT cut crystals from 22 MHz to 54 MHz or reference clocks from 20 MHz to 60 MHz
- Numerical (NCO) frequency control
  - Dynamically pullable output frequency enables FPGA-based PLLs (HDL available)
  - Fast serial peripheral interface (SPI) bus write speeds up to 100 MHz
  - On-the-fly frequency changes
- Dual PLL in compact 7 mm × 7 mm package
  - Replaces multiple large clock ICs, PLLs, fanout buffers, crystal oscillators (XOs), and voltage controlled crystal oscillators (VCXOs)
- Mix and match output buffers
  - In-circuit programmable LVPECL/LVDS/HCSL/LVCMOS
  - Independent buffer (VDDOx) drives multiple technologies
- Enhanced power supply noise rejection

APPLICATIONS

- FPGA-based jitter attenuators and low jitter PLLs
- Precision disciplined clocks and clock synthesizers
- Multirate clock synthesizers
- Optical: OTN/SDH/SONET
- Broadcast video: 3G SDI, HD SDI, SDI
- Networking and storage: Ethernet/SAS/Fibre Channel
- Wireless infrastructure: OBSAI/CPRI
- Industrial: IEEE 1588
- Numerically controlled oscillators (NCOs)

GENERAL DESCRIPTION

The AD9578 is a programmable synthesizer intended for jitter attenuation and asynchronous clocking applications in high performance telecommunications, networking, data storage, serializer/deserializer (SERDES), and physical layer (PHY) applications. The device incorporates two low jitter PLLs that provide any frequency with precision better than 0.1 ppb, each with two separate output dividers, for a total of four programmable outputs, delivering maximum flexibility and jitter performance. Each output is independently programmable to provide frequencies of up to 919 MHz with <410 fs typical rms jitter (12 kHz to 20 MHz) utilizing compact, low cost fundamental mode crystals (XTALs) that enable a robust supply chain. Using integer frequency synthesis, the AD9578 is capable of achieving rms jitter as low as 290 fs.

The AD9578 is packaged with a factory programmed default power-on configuration. After power-on, all settings including output frequency are reconfigurable through a fast SPI.

The AD9578 architecture permits it to be used as a numerically controlled oscillator (NCO). This allows the user to dynamically change the frequency using the fast SPI bus. FPGAs and other devices can take advantage of this function to implement digital PLLs with configurable loop bandwidths for jitter attenuation applications, precision disciplined clocks that lock to tight stability references, or digitally controlled precision timing applications, such as network timing and IEEE 1588 applications. The SPI bus can operate up to 50 MHz, enabling fast FPGA loops while multiple devices share the same bus. The AD9578 can also be used in multirate precision applications, such as broadcast video or OTN. HDL FPGA code for digital PLL applications is available from Analog Devices, Inc.

SIMPLIFIED FUNCTIONAL BLOCK DIAGRAM

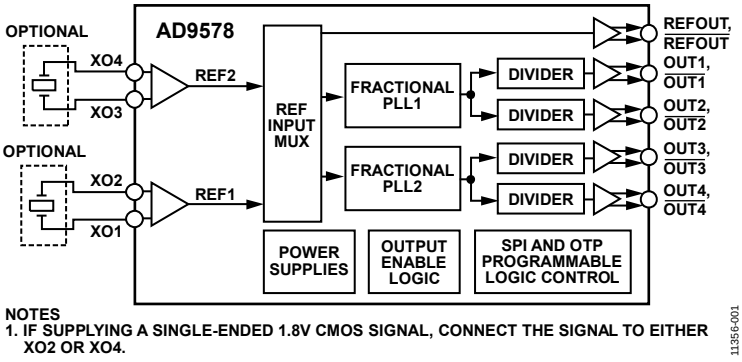

Figure 1.

Rev. B Document Feedback

Information furnished by Analog Devices is believed to be accurate and reliable. However, no responsibility is assumed by Analog Devices for its use, nor for any infringements of patents or other rights of third parties that may result from its use. Specifications subject to change without notice. No license is granted by implication or otherwise under any patent or patent rights of Analog Devices. Trademarks and registered trademarks are the property of their respective owners.

One Technology Way, P.O. Box 9106, Norwood, MA 02062-9106, U.S.A.
Tel: 781.329.4700 ©2014–2017 Analog Devices, Inc. All rights reserved.
Technical Support www.analog.com

TABLE OF CONTENTS

Features 1
Applications 1
General Description 1
Simplified Functional Block Diagram 1
Revision History 3
Specifications 4
Supply Voltage and Current (2.5 V Operation) 4
Supply Voltage and Current (3.3 V Operation) 4
Power Dissipation 4
Logic Inputs ($\overline{CS}$, $\overline{PD1}$, OEREF, OE1, OE2, OE3, OE4) 5
Reference Inputs (XO1, XO2, XO3, XO4) 5
Distribution Clock Outputs (Including REFOUT/$\overline{REFOUT}$) 6
Serial Port 9
Digital PLL 10
Digital Functions Timing 10
Jitter Generation Using 49.152 MHz Crystal 10
Jitter Generation Using 25 MHz Square wave 11
Absolute Maximum Ratings 12
ESD Caution 12
Pin Configuration and Function Descriptions 13
Typical Performance Characteristics 15
Test Setup and Configuration Circuits 18
Input/Output Termination Recommendations 19
Getting Started 20
Chip Power Monitor and Startup 20
Device Register Programming Using a Register Setup File 20
OTP Programming 20
Theory of Operation 21
Overview 21
PLL and Output Driver Control 22
Overview 22
PLL Enable/Disable 22
Output Driver Format 23
Output Configuration Example 23
Reference Input 24
Overview 24
Reference Input 24
Crystal Oscillator Amplifier Enable 24
REFOUT/$\overline{REFOUT}$ Source Selection 24
Crystal Oscillator Inputs 25
Overview 25
Crystal Oscillator Gain 25
Crystal Load Capacitors 25
PLLs 26
Overview 26
PLL Modes of Operation 26
VCO 27
Charge Pump 27
Output Dividers 27
Loss of Lock Indicator 27
Resets 27
Example Values for 49.152 MHz crystal 28
SPI Programming 29
Overview 29
SPI Description 29
OTP Programming 30
Register Map 32
Register Map Bit Descriptions 34
Chip and Manufacturer ID (Register 0, Address 0x00) 34
Product ID, Chip ID, and User Programing Space (Register 1, Address 0x01) 34
External Pin Readback and Override (Register 2, Address 0x02) 34
REFOUT/OUTPUT Divider Enable (Register 3, Address 0x03) 36
XTAL1 and Output Buffer Configuration (Register 4, Address 0x04) 37
Output Driver Configuration (Register 5, Address 0x05) 38
PLL1 Configuration (Register 6, Address 0x06) 38
PLL1 Configuration (Register 7, Address 0x07) 39
PLL2 Configuration (Register 8, Address 0x08) 40
PLL2 Configuration (Register 9, Address 0x09) 40
XTAL2 Configuration (Register 10, Address 0x0A) 42
Reserved (Register 11, Address 0x0B) 42
PLL1 K_{VCO} Band (Register 12, Address 0x0C) 42
Reserved (Register 13, Address 0x0D) 42
PLL2 K_{VCO} Band (Register 14, Address 0x0E) 43
PLL Lock Detect (Register 15, Address 0x0F) 43
Outline Dimensions 44
Ordering Guide 44

REVISION HISTORY

1/2017—Rev. A to Rev. B

Change to Table 31 32

10/2016—Rev. 0 to Rev. A

Changes to Figure 3 13
Changes to Table 29 28
Added Exposed Pad Notation to Outline Dimensions 44

10/2014—Revision 0: Initial Version

SPECIFICATIONS

SUPPLY VOLTAGE AND CURRENT (2.5 V OPERATION)

V_{DD} = 2.5 V ± 5%, T_A = −25°C to +85°C.

Table 1.

Parameter	Symbol	Min	Typ	Max	Unit	Test Conditions/Comments
SUPPLY VOLTAGE	V_{DD}	2.375	2.50	2.625	V	
SUPPLY CURRENT	I_{DD}	229	247	265	mA	Using typical configuration in Table 3
		337	365	388	mA	Using all blocks running configuration in Table 3

SUPPLY VOLTAGE AND CURRENT (3.3 V OPERATION)

V_{DD} = 3.3 V ± 10%, T_A = −25°C to +85°C.

Table 2.

Parameter	Symbol	Min	Typ	Max	Unit	Test Conditions/Comments
SUPPLY VOLTAGE	V_{DD}	2.97	3.30	3.63	V	
	V_{PROG}	5.25	5.5	V_{DD} + 2.5	V	$\overline{CS}$ pin only; used only for one time programmable (OTP) programming; perform OTP programming only with V_{DD} = 3.3 V
SUPPLY CURRENT	I_{DD}		252	268	mA	Using typical configuration in Table 3
			373	397	mA	Using all blocks running configuration in Table 3

POWER DISSIPATION

V_{DD} = 2.5 V ± 5%, T_A = −25°C to +85°C. Maximum power is at V_{DD} = 2.625 V and is usually 11% higher than typical.

Table 3.

Parameter	Min	Typ	Max	Unit	Test Conditions/Comments
POWER DISSIPATION					
Typical Configuration		618	696	mW	XTAL: 25 MHz REFOUT driver: disabled PLL1: one LVPECL driver at 644.53125 MHz PLL2: one single-ended LVCMOS driver (with 80 pF load) at 100 MHz
All Blocks Running		913	1018	mW	XTAL: 49.152 MHz XTAL on both XTAL inputs REFOUT driver: LVPECL mode, 49.152 MHz PLL1: two LVPECL drivers at 693.812 MHz PLL2: two LVPECL drivers at 693.812 MHz
Full Power-Down		67	75	mW	$\overline{PD1}$ pin grounded; Register 0x02 = 0x015555 to disable remainder of chip
Incremental Power Dissipation					Starting with typical configuration; change in power due to the indicated operation
Crystal Reference On/Off		25		mW	
PLL On/Off		259		mW	PLL1 or PLL2 on/off, including output drivers or channel dividers
Output Distribution Driver On/Off					
HCSL (at 644.53 MHz)		75		mW	Each output of a differential pair has 50 Ω to ground
LVDS (at 644.53 MHz)		43		mW	100 Ω across differential pair
LVPECL (at 644.53 MHz)		107		mW	50 Ω to V_{DD} − 2 V
3.3 V LVCMOS (at 25 MHz)		75		mW	A single 3.3 V LVCMOS output with an 80 pF load

LOGIC INPUTS ($\overline{CS}$, $\overline{PD1}$, OEREF, OE1, OE2, OE3, OE4)

Table 4.

Parameter	Min	Typ	Max	Unit	Test Conditions/Comments
LOGIC INPUTS ($\overline{CS}$ in OTP FUNCTION)					Specifications apply to the $\overline{CS}$ pin while in OTP programming mode
Input Voltage (V_{PROG})	5.25	5.5	V_{DD} + 2.5	V	See V_{PROG} definition in Table 1; OTP programming must be done with V_{DD} = 3.3 V
Input Current		20	25	mA	Current consumed during OTP programming
Time to OTP Program	800			µs	Time required per bit programmed
LOGIC INPUTS ($\overline{PD1}$, OEREF, OE1, OE2, OE3, OE4, $\overline{CS}$)					Numbers are valid for V_{DD} = 2.5 V and 3.3 V
Input Voltage					
High (V_{IH})	2.2			V	
Low (V_{IL})			0.8	V	
Input Current (I_{INH}, I_{INL})		38	60	µA	
Input Capacitance (C_{IN})		3		pF	

REFERENCE INPUTS (XO1, XO2, XO3, XO4)

Table 5.

Parameter	Min	Typ	Max	Unit	Test Conditions/Comments
REFERENCE INPUT DRIVEN BY CRYSTAL RESONATOR					
Crystal Resonator Frequency Range	20		60	MHz	Fundamental mode, AT cut crystal
Crystal Motional Resistance			100	Ω	Guaranteed by design
REFERENCE INPUT DRIVEN BY A DIFFERENTIAL CLOCK					This input is a source follower and must be either dc-coupled 1.8 V LVCMOS on the XO2 or XO4 pin, or ac-coupled
Input Frequency Range	20		60	MHz	Assumes ac-coupled LVDS (494 mV p-p across the differential pair)
Input Slew Rate	133			V/µs	Minimum limit imposed for jitter performance
Differential Input Voltage Sensitivity	250			mV p-p	Minimum voltage across pins required to ensure switching between logic states; the instantaneous voltage on either pin must not exceed the supply rails; can accommodate single-ended input by ac grounding of complementary input
REFERENCE INPUT DRIVEN BY A SINGLE-ENDED CLOCK					The XO2 pin (for PLL1) and XO4 pin (for PLL2) input accepts dc-coupled 1.8 V LVCMOS
Input Frequency Range	20		60	MHz	DC-coupled
Input Slew Rate	67			V/µs	Minimum limit imposed for jitter performance
Single-Ended Input (XO2, XO4 Pins Only)					
Input Voltage				V	
High (V_{IH})	1.48				
Low (V_{IL})			0.98	V	

DISTRIBUTION CLOCK OUTPUTS (INCLUDING REFOUT/$\overline{\text{REFOUT}}$)

Table 6.

Parameter	Min	Typ	Max	Unit	Test Conditions/Comments
3.3 V LVPECL MODE					V_{DD} = 3.3V; 50 Ω to V_{DD} − 2 V termination at output pins
Output Frequency	11.8		919	MHz	REFOUT/$\overline{\text{REFOUT}}$ limited to 60 MHz
Rise Time (20% to 80%)		130	183	ps	
Fall Time (80% to 20%)		142	203	ps	
Duty Cycle, OUTPUT1 and OUTPUT4					
111.8 ≤ f_{OUT} ≤ 357 MHz	50	52	54	%	Output divider settings other than 4.5
357 < f_{OUT} ≤ 919 MHz	43	47	51	%	Output divider settings other than 4.5
Output Divider = 4.5	46	50	54	%	Measured at 765 MHz
Duty Cycle, OUTPUT2 and OUTPUT3					
111.8 ≤ f_{OUT} ≤ 357 MHz	49	51	53	%	Output divider settings other than 4.5
357 < f_{OUT} ≤ 919 MHz	45	49	51	%	Output divider settings other than 4.5
Output Divider = 4.5	51	57	63	%	Measured at 765 MHz
Differential Output Voltage Swing	700	850	1000	mV	Voltage across pins at minimum output frequency; if a differential probe is used, peak-to-peak voltage (V_{PP}) is 2× this value
Common-Mode Output Voltage	1.81	1.91	2.01	V	
2.5 V LVPECL MODE					V_{DD} = 2.5 V; 50 Ω to V_{DD} − 2 V termination at output pins
Output Frequency	11.8		919	MHz	REFOUT/$\overline{\text{REFOUT}}$ limited to 60 MHz
Rise Time (20% to 80%)		137	186	ps	
Fall Time (80% to 20%)		148	209	ps	
Duty Cycle, OUTPUT1 and OUTPUT4					
111.8 ≤ f_{OUT} ≤ 357 MHz	50	52	54	%	Output divider settings other than 4.5
357 < f_{OUT} ≤ 919 MHz	49	51	54	%	Output divider settings other than 4.5
Output Divider = 4.5	46	50	54	%	Measured at 765 MHz
Duty Cycle, OUTPUT2 and OUTPUT3					
111.8 ≤ f_{OUT} ≤ 357 MHz	43	48	51	%	Output divider settings other than 4.5
357 < f_{OUT} ≤ 919 MHz	44	48	52	%	Output divider settings other than 4.5
Output Divider = 4.5	51	57	63	%	Measured at 765 MHz
Differential Output Voltage Swing	700	850	1000	mV	Voltage across pins at minimum output frequency; if a differential probe is used, V_{PP} is 2× this value
Common-Mode Output Voltage	1.05	1.15	1.25	V	
3.3 V HCSL MODE					50 Ω to ground termination at output pins
Output Frequency	11.8		919	MHz	REFOUT/$\overline{\text{REFOUT}}$ limited to 60 MHz
Rise Time (20% to 80%)		180	266	ps	
Fall Time (80% to 20%)		186	286	ps	
Duty Cycle, OUTPUT1 and OUTPUT4					
111.8 ≤ f_{OUT} ≤ 357 MHz	51	52	54	%	Output divider settings other than 4.5
357 < f_{OUT} ≤ 919 MHz	48	51	54	%	Output divider settings other than 4.5
Output Divider = 4.5	49	52	56	%	Measured at 765 MHz
Duty Cycle, OUTPUT2 and OUTPUT3					
111.8 ≤ f_{OUT} ≤ 357 MHz	50	53	54	%	Output divider settings other than 4.5
357 < f_{OUT} ≤ 919 MHz	48	51	53	%	Output divider settings other than 4.5
Output Divider = 4.5	53	59	67	%	Measured at 765 MHz
Output High Voltage	624	750	850	mV	
Output Low Voltage	−50	0	+50	mV	
Output Voltage Swing (V_{SWING})	624	750	850	mV	Voltage across pins at minimum output frequency; when a differential probe is used, V_{PP} is 2× this value
Absolute Crossing Point (V_{OX})	295	360	400	mV	
Short-Circuit Output Current		14	17	mA	

Parameter	Min	Typ	Max	Unit	Test Conditions/Comments
2.5 V HCSL MODE					50 Ω to ground termination at output pins
Output Frequency	11.8		919	MHz	REFOUT/$\overline{\text{REFOUT}}$ limited to 60 MHz
Rise Time (20% to 80%)					
OUTPUT1, OUTPUT2, OUTPUT3		199	275	ps	Output divider settings other than 4.5
OUTPUT4		243	370	ps	Output divider settings other than 4.5
Fall Time (80% to 20%)					
OUTPUT1, OUTPUT2, OUTPUT3		191	287	ps	Output divider settings other than 4.5
OUTPUT4		226	329	ps	Output divider settings other than 4.5
Duty Cycle, OUTPUT1 and OUTPUT4					
111.8 ≤ f_{OUT} ≤ 357 MHz	50	52	54	%	Output divider settings other than 4.5
357 < f_{OUT} ≤ 919 MHz	47	50	53	%	Output divider settings other than 4.5
Output Divider = 4.5	39	52	55	%	Measured at 765 MHz
Duty Cycle, OUTPUT2 and OUTPUT3					
111.8 ≤ f_{OUT} ≤ 357 MHz	50	52	54	%	Output divider settings other than 4.5
357 < f_{OUT} ≤ 919 MHz	48	50	53	%	Output divider settings other than 4.5
Output Divider = 4.5	45	59	65	%	Measured at 765 MHz
Output High Voltage	624	750	850	mV	
Output Low Voltage	-50	0	50	mV	
Output Voltage Swing (V_{SWING})	624	750	850	mV	Voltage across pins at minimum output frequency; if a differential probe is used, V_{PP} is 2× this value
Absolute Crossing Point (V_{OX})	295	360	400	mV	
Short-Circuit Output Current		14	17	mA	
LVDS MODE (V_{DD} = 3.3 V and 2.5 V)					100 Ω termination across the output pair
Output Frequency	11.8		919	MHz	REFOUT/$\overline{\text{REFOUT}}$ limited to 54 MHz
Rise Time (20% to 80%)		173	215	ps	
Fall Time (80% to 20%)		177	223	ps	
OUTPUT1 and OUTPUT4 Duty Cycle					
111.8 ≤ f_{OUT} ≤ 357 MHz	50	52	54	%	Output divider settings other than 4.5
357 < f_{OUT} ≤ 919 MHz	46	50	54	%	Output divider settings other than 4.5
Output Divider = 4.5	49	52	55	%	Measured at 765 MHz
OUTPUT2 and OUTPUT3 Duty Cycle					
111.8 ≤ f_{OUT} ≤ 357 MHz	50	52	54	%	Output divider settings other than 4.5
357 < f_{OUT} ≤ 919 MHz	46	50	53	%	Output divider settings other than 4.5
Output Divider = 4.5	51	59	66	%	Measured at 765 MHz
Differential Output Voltage Swing					
Balanced, V_{OD}	247		454	mV	Voltage across pins at minimum output frequency; if a differential probe is used, V_{PP} is 2× this value
Unbalanced, ΔV_{OD}			50	mV	Absolute difference between voltage swing of true pin and complementary pin
Offset Voltage					
Common Mode, V_{OS}	1.08	1.26	1.375	V	
Common-Mode Difference, ΔV_{OS}			50	mV	Voltage difference between pins at minimum output frequency
Short-Circuit Output Current		16	24	mA	
LVCMOS MODE (V_{DD} = 3.3 V and 2.5 V)					
Output Frequency	11.8		250	MHz	REFOUT limited to 60 MHz
Rise Time (20% to 80%)					Capacitor load (C_{LOAD}) = 10 pF
330 Ω Pull-Down Resistor		1.3	1.9	ns	
3.3 kΩ Pull-Down Resistor		1.2	1.7	ns	
Fall Time (20% to 80%)					C_{LOAD} = 10 pF
330 Ω Pull-Down Resistor		1.3	2	ns	
3.3 kΩ Pull-Down Resistor		1.5	2.4	ns	

Parameter	Min	Typ	Max	Unit	Test Conditions/Comments
Duty Cycle (20% to 80%)				ns	C_{LOAD} = 10 pF
330 Ω Pull-Down Resistor	43	52	62	%	
3.3 kΩ Pull-Down Resistor	44	53	63	%	
Output Voltage High (V_{OH})					At minimum output frequency; outputs terminated 50 Ω to V_{DD}/2
V_{DD} = 3.3 V	3.0	3.1	3.35	V	
V_{DD} = 2.5 V	1.9	2.0	2.1	V	
Output Voltage Low (V_{OL})					At minimum output frequency; outputs terminated 50 Ω to V_{DD}/2
V_{DD} = 3.3 V	0.22	0.32	0.42	V	
V_{DD} = 2.5 V	0.2	0.3	0.4	V	
OUTPUT TIMING SKEW					OUTPUT2 lags OUTPUT1; OUTPUT3 lags OUTPUT4
LVPECL					
Between OUTPUT1 and OUTPUT2 Drivers		90		ps	LVPECL mode on both drivers; rising edge only; any divide value
Between OUTPUT3 and OUTPUT4 Drivers		102		ps	LVPECL mode on both drivers; rising edge only; any divide value
LVDS					
Between OUTPUT1 and OUTPUT2 Drivers		94		ps	LVDS mode on both drivers; rising edge only; any divide value
Between OUTPUT3 and OUTPUT4 Drivers		100		ps	LVDS mode on both drivers; rising edge only; any divide value
HCSL					
Between OUTPUT1 and OUTPUT2 Drivers		48		ps	HCSL mode on both drivers; rising edge only; any divide value
Between OUTPUT3 and OUTPUT4 Drivers		59		ps	HCSL mode on both drivers; rising edge only; any divide value
LVCMOS					
Between OUTPUT1 and OUTPUT2 Drivers		64		ps	LVCMOS mode on both drivers; rising edge only; any divide value
Between OUTPUT3 and OUTPUT4 Drivers		59		ps	LVCMOS mode on both drivers; rising edge only; any divide value

SERIAL PORT

Table 7.

Parameter	Min	Typ	Max	Unit	Test Conditions/Comments
$\overline{CS}$					See Table 4 for using $\overline{CS}$ while in OTP programming mode
Input Voltage					
Logic 1	2.2			V	
Logic 0			1.2	V	
Input Current		44		µA	
Logic 1					
Logic 0		88		µA	
Input Capacitance		2		pF	
SCK					Internal 30 kΩ pull-down resistor
Input Voltage					
Logic 1	2.2			V	
Logic 0		0.8	1.2	V	
Input Current					
Logic 1		200		µA	
Logic 0		1		µA	
Input Capacitance		2		pF	
SDI					
Input Voltage					
Logic 1	2.2			V	
Logic 0			1.2	V	
Input Current					
Logic 1		1		µA	
Logic 0		1		µA	
Input Capacitance		2		pF	
SDO/LOL					
Output Logic 1 Voltage	V_{DD} – 0.6			V	1 mA load current
Output Logic 0 Voltage			0.4	V	1 mA load current
TIMING					See Figure 2
SCK					
Clock Rate, $1/t_{CLK}$			50	MHz	SDO/LOL pin maximum speed may be limited by excess capacitance on the receiver connected to the SDO/LOL pin
Write Only			100	MHz	
Pulse Width High, t_{HIGH}	2			ns	
Pulse Width Low, t_{LOW}	2			ns	
SDI to SCK Setup, t_{DS}	1.5			ns	
SCK to SDI Hold, t_{DH}	2			ns	
SCK to Valid SDO, t_{DV}			8	ns	SDO function of SDO/LOL pin (see Figure 33)
$\overline{CS}$ to SCK Setup, t_S	65			ns	$\overline{CS}$ is normally held low during a complete SPI transaction
$\overline{CS}$ to SCK Hold, t_C	0			ns	
$\overline{CS}$ Minimum Pulse Width High	65			ns	

Timing Diagram

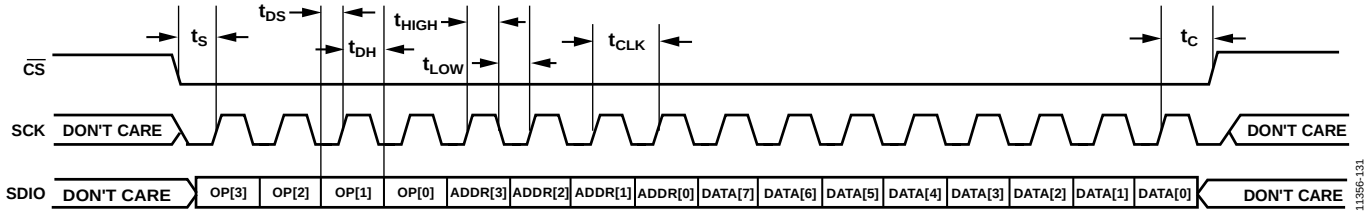

Figure 2. Serial Port Timing Diagram

DIGITAL PLL

Table 8.

Parameter	Min	Typ	Max	Unit	Test Conditions/Comments
FREQUENCY STEP SIZE	0.1			ppb	

DIGITAL FUNCTIONS TIMING

Table 9.

Parameter	Min	Typ	Max	Unit	Test Conditions/Comments
OTP PROGRAMMING TIME, PER BIT	0.8	1	2	ms	See Table 4 for using $\overline{CS}$ while in OTP programming mode (the AD9578 has 444 bits; therefore, the total programming time is <1 sec)
POWER-ON RESET TIME	4			ms	Do not access serial port during power-on reset.

JITTER GENERATION USING 49.152 MHZ CRYSTAL

Both PLLs are generating the same output frequency and use a 49.152 MHz crystal for the input reference. The loop bandwidth is set to the default value of 300 kHz. Where multiple driver types are listed, there is no significant difference between driver types.

Table 10.

Parameter	Min	Typ	Max	Unit	Test Conditions/Comments
JITTER GENERATION					Fractional mode on, f_{REF} = 49.152 MHz XTAL
LVPECL, HCSL, LVDS Driver					
f_{OUT} = 622.08 MHz					
Bandwidth: 12 kHz to 20 MHz		320		fs rms	
Bandwidth: 20 kHz to 80 MHz		370		fs rms	
f_{OUT} = 693.48 MHz					
Bandwidth: 12 kHz to 20 MHz		403		fs rms	
Bandwidth: 20 kHz to 80 MHz		408		fs rms	
f_{OUT} = 174.703 MHz					
Bandwidth: 12 kHz to 20 MHz		403		fs rms	
Bandwidth: 20 kHz to 80 MHz		410		fs rms	
f_{OUT} = 161.1328 MHz					
Bandwidth: 12 kHz to 20 MHz		361		fs rms	
Bandwidth: 20 kHz to 80 MHz		363		fs rms	
LVPECL, HCSL, LVDS, LVCMOS Driver					
f_{OUT} = 156.25 MHz					
Bandwidth: 12 kHz to 20 MHz		350		fs rms	
Bandwidth: 1.875 MHz to 20 MHz		77		fs rms	
Bandwidth: 20 kHz to 80 MHz		352		fs rms	

JITTER GENERATION USING 25 MHZ SQUARE WAVE

Both PLLs are generating the same output frequency and use a 25 MHz square wave for the input reference. The loop bandwidth is set to the default value of 300 kHz. Where multiple driver types are listed, there is no significant difference between driver types. Fractional mode turned on, unless otherwise stated.

Table 11.

Parameter	Min	Typ	Max	Unit	Test Conditions/Comments
JITTER GENERATION					f_{REF} = 25 MHz square wave
LVPECL, HCSL, LVDS Driver					
f_{OUT} = 622.08 MHz					
Bandwidth: 12 kHz to 20 MHz		515		fs rms	
Bandwidth: 20 kHz to 80 MHz		516		fs rms	
f_{OUT} = 693.48 MHz					
Bandwidth: 12 kHz to 20 MHz		504		fs rms	
Bandwidth: 20 kHz to 80 MHz		505		fs rms	
f_{OUT} = 174.703 MHz					
Bandwidth: 12 kHz to 20 MHz		517		fs rms	
Bandwidth: 20 kHz to 80 MHz		523		fs rms	
f_{OUT} = 161.1328 MHz					
Bandwidth: 12 kHz to 20 MHz		527		fs rms	
Bandwidth: 20 kHz to 80 MHz		530		fs rms	
LVPECL, HCSL, LVDS, LVCMOS Driver					
f_{OUT} = 156.25 MHz					Integer mode operation
Bandwidth: 12 kHz to 20 MHz		290		fs rms	
Bandwidth: 1.875 MHz to 20 MHz		61		fs rms	
Bandwidth: 20 kHz to 80 MHz		292		fs rms	

ABSOLUTE MAXIMUM RATINGS

Table 12.

Parameter	Rating
Supply Voltage (V_{DD})	4.6 V
Inputs (V_{IN}) (Except for $\overline{CS}$ Pin)	−0.50 V to V_{DD} + 0.5 V
$\overline{CS}$ Pin	V_{DD} + 2.5 V
Outputs (V_{OUT})	−0.50 V to V_{DD} + 0.5 V
Operating Temperature Range (T_A) Industrial	−25°C to +85°C
Storage Temperature Range (T_S)	−65°C to +150°C

Stresses at or above those listed under Absolute Maximum Ratings may cause permanent damage to the product. This is a stress rating only; functional operation of the product at these or any other conditions above those indicated in the operational section of this specification is not implied. Operation beyond the maximum operating conditions for extended periods may affect product reliability.

ESD CAUTION

ESD (electrostatic discharge) sensitive device. Charged devices and circuit boards can discharge without detection. Although this product features patented or proprietary protection circuitry, damage may occur on devices subjected to high energy ESD. Therefore, proper ESD precautions should be taken to avoid performance degradation or loss of functionality.

PIN CONFIGURATION AND FUNCTION DESCRIPTIONS

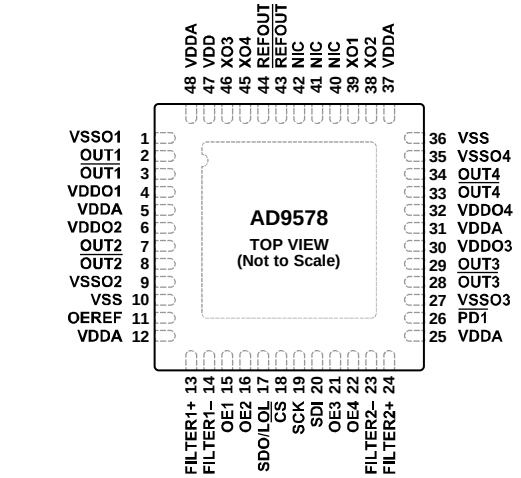

NOTES
1. NIC = NOT INTERNALLY CONNECTED. LEAVE THIS PIN UNCONNECTED.
2. THE EXPOSED PAD ON THE BOTTOM OF THE PACKAGE MUST BE CONNECTED TO GROUND FOR PROPER OPERATION.

11356-002

Figure 3. Pin Configuration

Table 13. Pin Function Descriptions

Pin No.	Mnemonic	Type	Description
1	VSSO1	Negative power	Return Path Ground for Clock Output 1.
2	OUT1	Output	Clock Output 1 Derived from PLL1. Supports frequencies up to the device maximum. OUT1 is a selectable[1] pin. When used in LVCMOS mode, OUT1 is the active pin.
3	$\overline{\text{OUT1}}$	Output	Active Low Clock Output 1 Derived from PLL1. Supports frequencies up to the device maximum. $\overline{\text{OUT1}}$ is a selectable[1] pin. $\overline{\text{OUT1}}$ is not used in LVCMOS mode; it is high-Z in LVCMOS mode.
4	VDDO1	Supply, positive power	Power Supply for Clock Output 1.
5, 12, 25, 31, 37, 48	VDDA	Supply, positive power	2.5 V or 3.3 V Analog Power Supply.
6	VDDO2	Supply, positive power	Power Supply for Clock Output 2.
7	OUT2	Output	Clock Output 2 Derived from PLL1. Supports frequencies up to the device maximum. OUT2 is a selectable[1] pin. When used in LVCMOS mode, OUT2 is the active pin.
8	$\overline{\text{OUT2}}$	Output	Active Low Clock Output 2 Derived from PLL1. Supports frequencies up to the device maximum. $\overline{\text{OUT1}}$ is a selectable[1] pin. $\overline{\text{OUT2}}$ is not used in LVCMOS mode; it is high-Z in LVCMOS mode.
9	VSSO2	Negative power	Return Path Ground for Clock Output 2.
10, 36	VSS	Negative power	Device Ground.
11	OEREF	Input	Output Enable for REFOUT and $\overline{\text{REFOUT}}$ Pins, LVCMOS. Active high. This pin has an internal 75 kΩ pull-down resistor.
13	FILTER1+	Filter	Phase-Locked Loop 1 (PLL1) Filter Node, Positive Side. Connect a 220 nF capacitor between this pin and Pin 14.
14	FILTER1−	Filter	PLL1 Filter Node, Negative Side. Connect a 220 nF capacitor between this pin and Pin 13.
15	OE1	Input	Output Enable 1 for Clock Output 1, LVCMOS. Places OUT1 and $\overline{\text{OUT1}}$ in a high-Z state. Active high. This pin has an internal 75 kΩ pull-up resistor.
16	OE2	Input	Output Enable 2 for Clock Output 2, LVCMOS. Places OUT2 and $\overline{\text{OUT2}}$ in a high-Z state. Active high. This pin has an internal 75 kΩ pull-up resistor.
17	SDO/LOL	Output	Serial Data Output for SPI Control/Loss of Lock, LVCMOS.
18	$\overline{\text{CS}}$	Input	Chip Select for SPI Control, LVCMOS. Active low. When this pin is set to 5 V, OTP programming is enabled (see Table 4 and the OTP Programming section). This pin has an internal 75 kΩ pull-up resistor.
19	SCK	Input	Serial Clock Input for SPI Control, LVCMOS.

Pin No.	Mnemonic	Type	Description
20	SDI	Input	Serial Data Input for SPI Control, LVCMOS.
21	OE3	Input	Output Enable 3 for Clock Output 3, LVCMOS. Places OUT3 and $\overline{\text{OUT3}}$ in a high-Z state. Active high is the default but active low is programmable. This pin has an internal 75 kΩ pull-up resistor.
22	OE4	Input	Output Enable 4 for Clock Output 4, LVCMOS. Places OUT4 and $\overline{\text{OUT4}}$ in a high-Z state. Active high is the default but active low is programmable. This pin has an internal 75 kΩ pull-up resistor.
23	FILTER2−	Filter	PLL2 Filter Node, Negative Side. Connect a 220 nF capacitor between this pin and Pin 24.
24	FILTER2+	Filter	PLL2 Filter Node, Positive Side. Connect a 220 nF capacitor between this pin and Pin 23.
26	$\overline{\text{PD1}}$	Input	Active Low Power-Down for PLL1, LVCMOS. This pin has an internal 75 kΩ pull-up resistor.
27	VSSO3	Negative power	Return Path Ground for Clock Output 3.
28	$\overline{\text{OUT3}}$	Output	Active Low Clock Output 3 Derived from PLL2. Supports frequencies up to the device maximum. $\overline{\text{OUT3}}$ is a selectable[1] pin. $\overline{\text{OUT3}}$ is not used in LVCMOS mode; it is high-Z in LVCMOS mode.
29	OUT3	Output	Clock Output 3 Derived from PLL2. Supports frequencies up to the device maximum. OUT3 is a selectable[1] pin. When used in LVCMOS mode, OUT3 is the active pin.
30	VDDO3	Supply, positive power	Power Supply for Clock Output 3.
32	VDDO4	Supply, positive power	Power Supply for Clock Output 4.
33	$\overline{\text{OUT4}}$	Output	Clock Output 4 Derived from PLL2. Supports frequencies up to the device maximum. $\overline{\text{OUT4}}$ is not used in LVCMOS mode and is high-Z. $\overline{\text{OUT4}}$ is a selectable[1] pin.
34	OUT4	Output	Clock Output 4 Derived from PLL2. Supports frequencies up to the device maximum. OUT4 is a selectable[1] pin. When used in LVCMOS mode, OUT4 is the active pin.
35	VSSO4	Negative power	Return Path Ground for Clock Output 4.
38	XO2	Input	Reference Input 1. Connect a crystal across this pin and XO1. Alternatively, the user can connect a 1.8 V LVCMOS clock to this pin only, or connect a differential, ac-coupled LVDS or LVPECL signal across this pin and the XO1 pin. This pin can be a crystal or reference input.
39	XO1	Input	Complementary Reference Input 1. Connect a crystal across this pin and XO2. Alternatively, the user can connect a differential, ac-coupled LVDS or LVPECL signal to this pin and the XO2 pin. This pin can be a crystal or reference input.
40, 41, 42	NIC		No Internal Connection. Leave these pins unconnected.
43	$\overline{\text{REFOUT}}$	Output	Active Low Reference Clock Output. This pin provides a copy of the reference input or crystal input frequency. $\overline{\text{REFOUT}}$ is a selectable[1] pin.
44	REFOUT	Output	Reference Clock Output. This pin provides a copy of the reference input or crystal input frequency. REFOUT is a selectable[1] pin.
45	XO4	Input	Reference Input 2. Connect a crystal across this pin and XO3. Alternatively, connect a 1.8 V LVCMOS clock to this pin only, or connect a differential, ac-coupled LVDS or LVPECL signal across this pin and the XO3 pin. This pin can be a crystal or reference input.
46	XO3	Input	Complementary Reference Input 2. Connect a crystal across this pin and XO4. Alternatively, connect a differential, ac-coupled LVDS or LVPECL signal to this pin and the XO4 pin.
47	VDD	Supply, positive power	2.5 V or 3.3 V Power Supply for Device Core. This pin can be a crystal or reference input.
	EPAD		Exposed Pad. The exposed pad on the bottom of the package must be connected to ground for proper operation.

[1] Selectable pins are factory programmed to a default power-up configuration. The user can override the default programming to support LVCMOS, LVDS, LVPECL, or HCSL mode after power-up using the SPI.

TYPICAL PERFORMANCE CHARACTERISTICS

f_R is the input reference clock frequency; f_{OUT} is the output clock frequency; V_{DD} at nominal supply voltage (3.3 V). 25 MHz square wave input is a dc-coupled 3.3 V LVCMOS signal with 0.8 ns (20% to 80%) rise time.

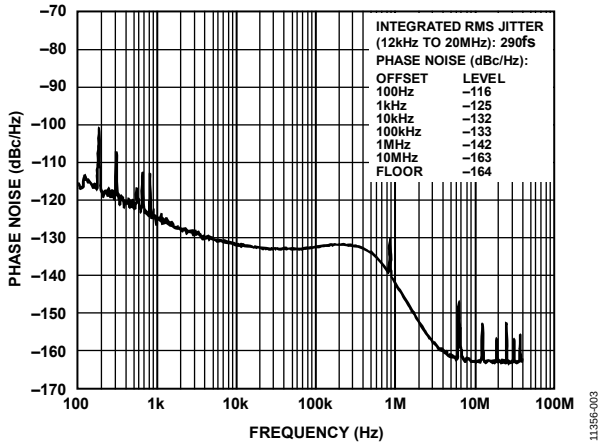

Figure 4. Absolute Phase Noise (Output Driver = LVDS), f_R = 25 MHz Square Wave, f_{OUT} = 156.25 MHz on Both PLLs

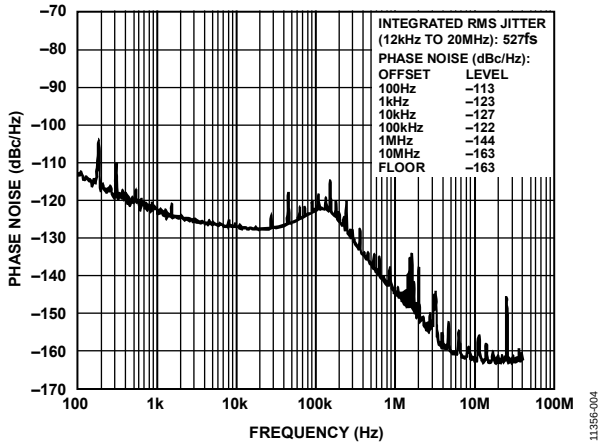

Figure 5. Absolute Phase Noise (Output Driver = LVCMOS), f_R = 25 MHz Square Wave, f_{OUT} = 161.1328125 MHz on Both PLLs

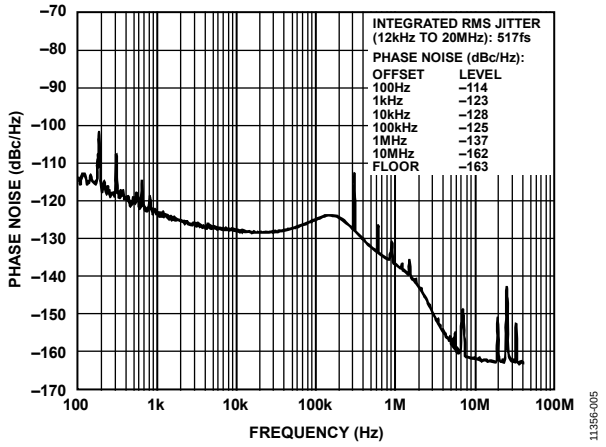

Figure 6. Absolute Phase Noise (Output Driver = LVPECL), f_R = 25 MHz Square Wave, f_{OUT} = 174.703 MHz on Both PLLs

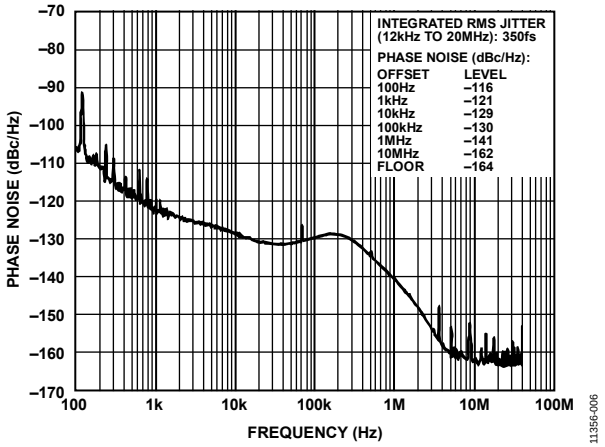

Figure 7. Absolute Phase Noise (Output Driver = LVDS), f_R = 49.152 MHz Crystal, f_{OUT} = 156.25 MHz on Both PLLs

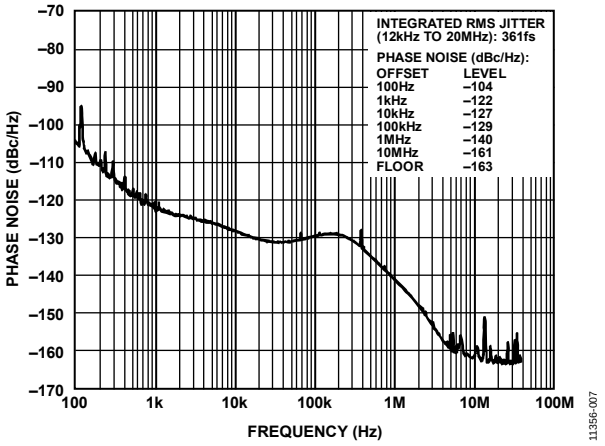

Figure 8. Absolute Phase Noise (Output Driver = 3.3.V LVCMOS), f_R = 49.152 MHz Crystal, f_{OUT} = 161.1328125 MHz on Both PLLs

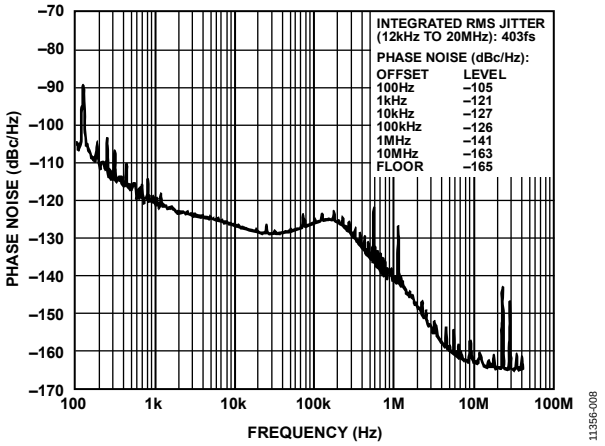

Figure 9. Absolute Phase Noise (Output Driver = LVPECL), f_R = 49.152 MHz Crystal, f_{OUT} = 174.703 MHz on Both PLLs

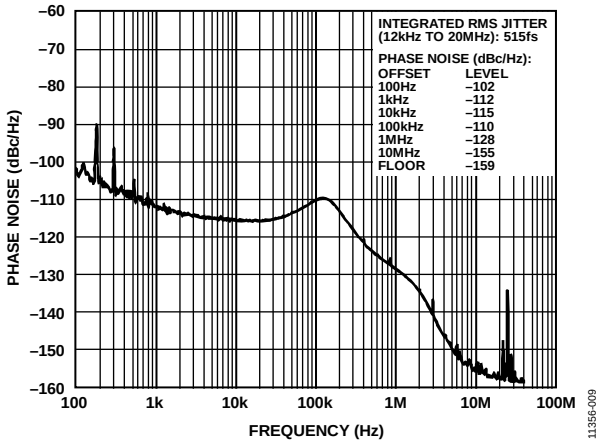

Figure 10. Absolute Phase Noise (Output Driver = LVPECL), f_R = 25 MHz 3.3 V LVCMOS Square Wave, f_{OUT} = 622.08 MHz on Both PLLs

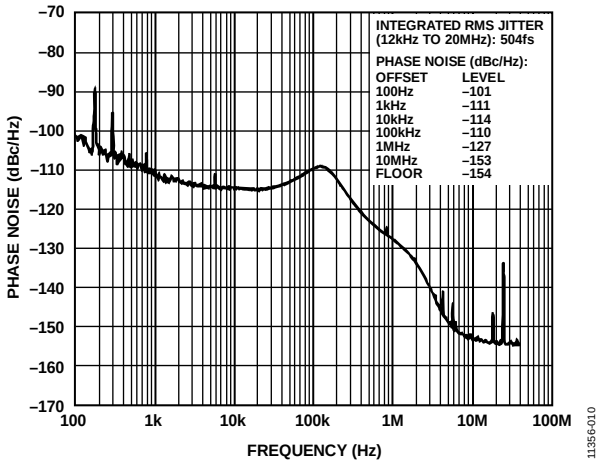

Figure 11. Absolute Phase Noise (Output Driver = LVPECL), f_R = 25 MHz Square Wave, f_{OUT} = 693.482991 MHz on Both PLLs

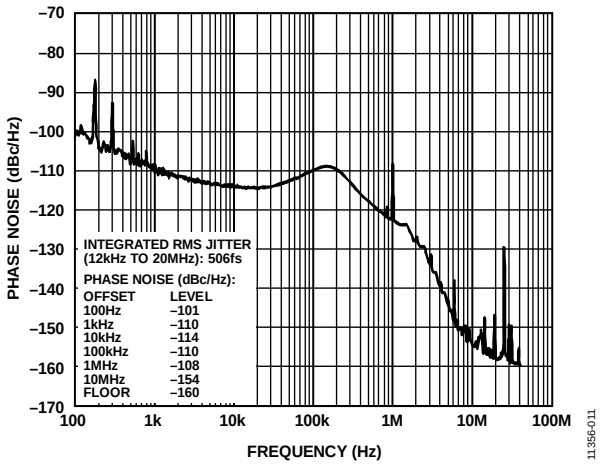

Figure 12. Absolute Phase Noise (Output Driver = LVPECL), f_R = 25 MHz Square Wave on XO1/XO2 Pins, f_{OUT} = 919 MHz on Both PLLs

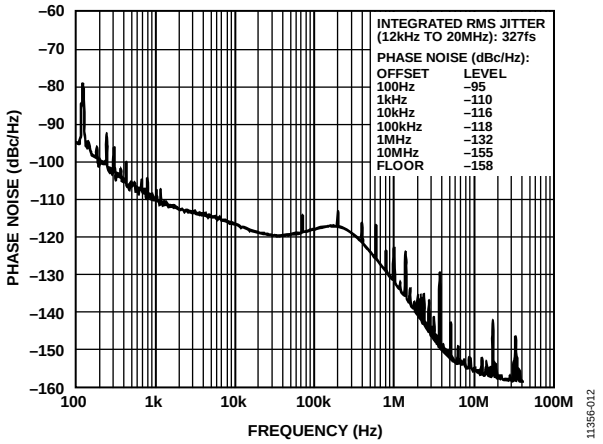

Figure 13. Absolute Phase Noise (Output Driver = LVPECL), f_R = 49.152 MHz Crystal, f_{OUT} = 622.08 MHz on Both PLLs

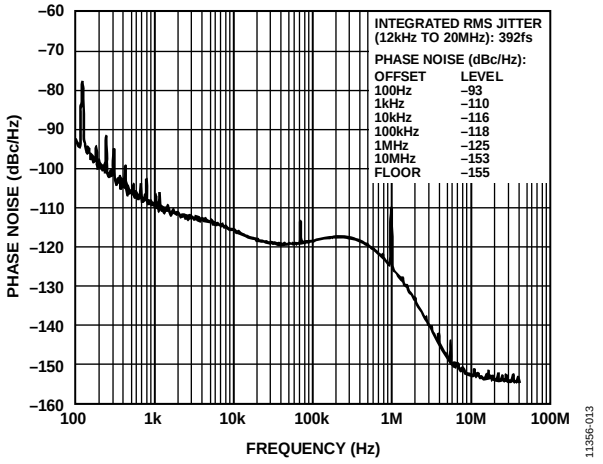

Figure 14. Absolute Phase Noise (Output Driver = LVPECL), f_R = 49.152 MHz Crystal, f_{OUT} = 693.482991 MHz on Both PLLs

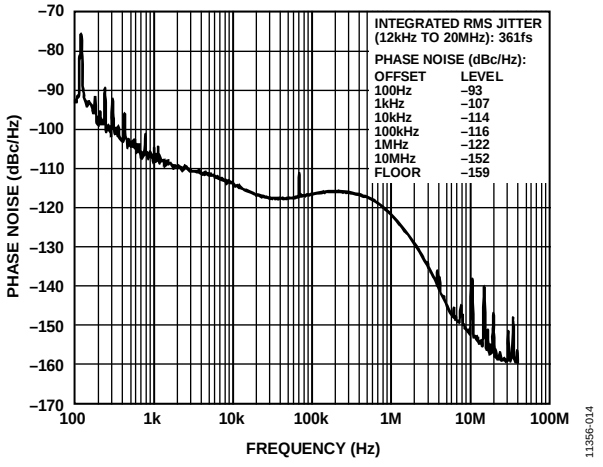

Figure 15. Absolute Phase Noise (Output Driver = LVPECL), f_R = 49.152 MHz Crystal, f_{OUT} = 919 MHz on Both PLLs

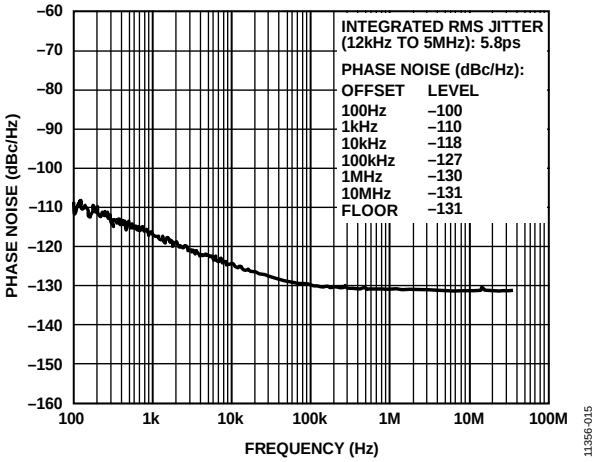

Figure 16. Phase Noise of 25 MHz, 3.3 V LVCMOS Input Clock Used

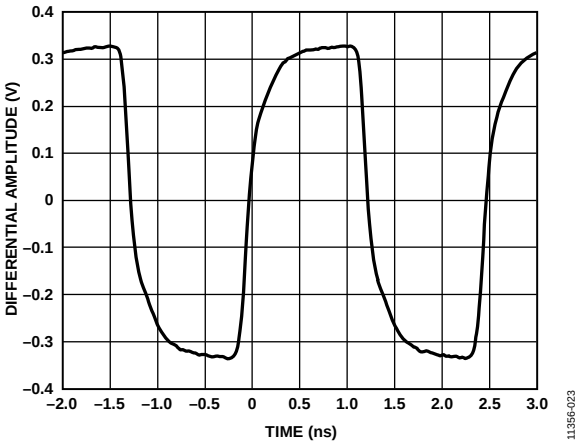

Figure 17. Output Waveform, LVDS (400 MHz)

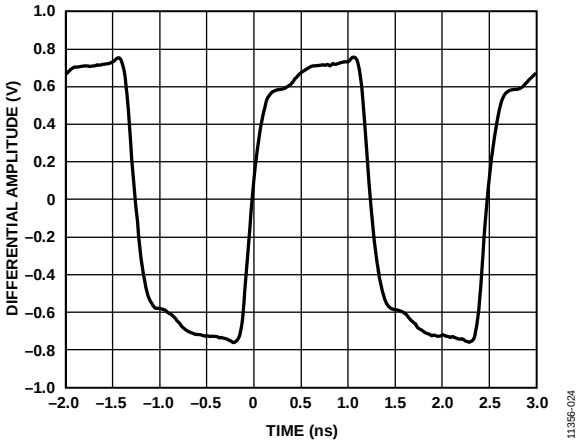

Figure 18. Output Waveform, HCSL (400 MHz)

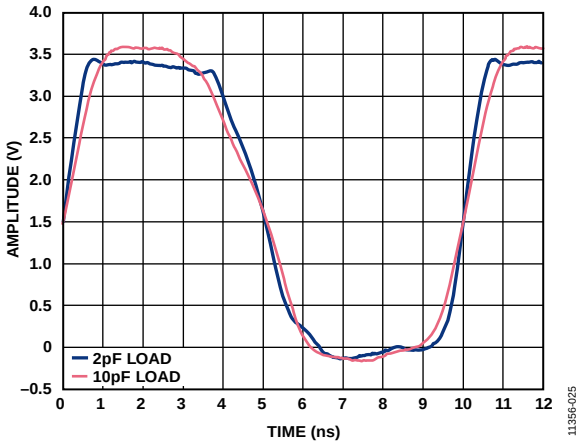

Figure 19. Output Waveform, 3.3 V CMOS (100 MHz)

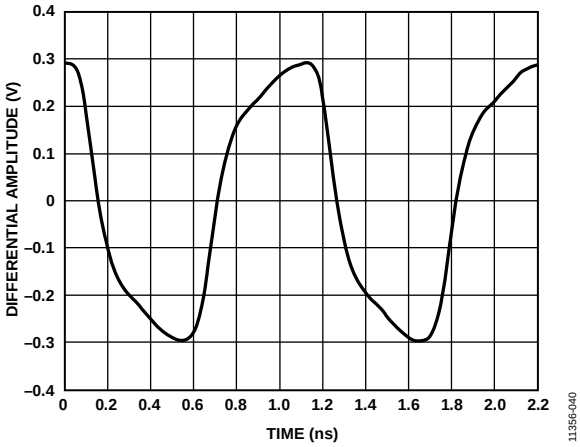

Figure 20. Output Waveform, LVDS (900 MHz)

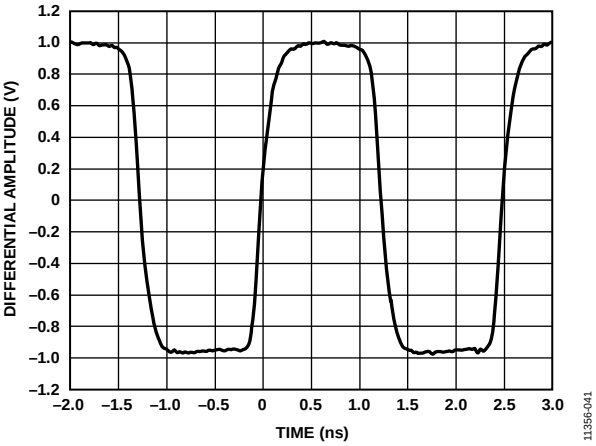

Figure 21. Output Waveform, LVPECL (400 MHz)

TEST SETUP AND CONFIGURATION CIRCUITS

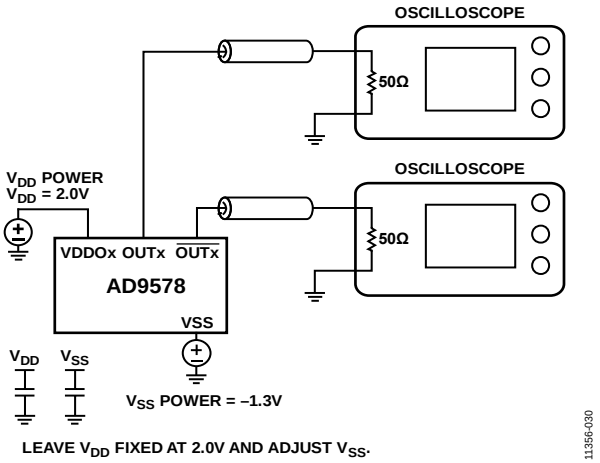

Figure 22. LVPECL Test Circuit

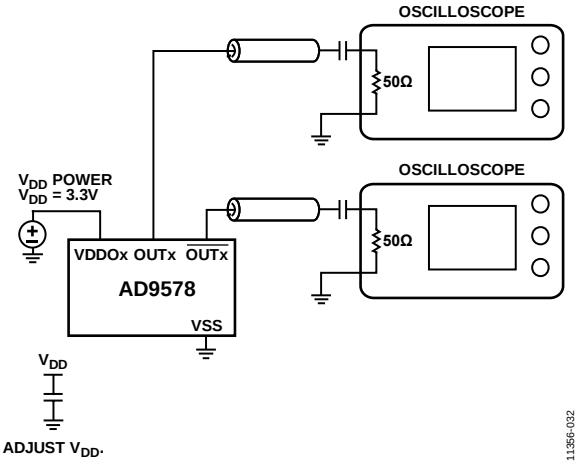

Figure 24. LVDS Test Circuit

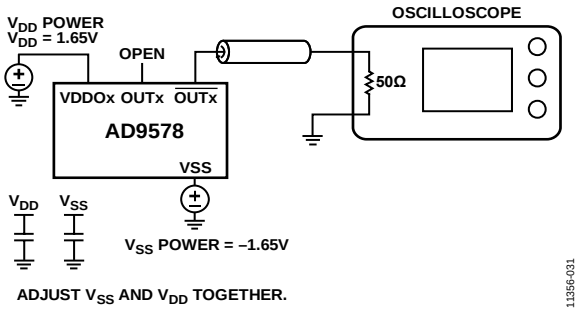

Figure 23. LVCMOS Test Circuit

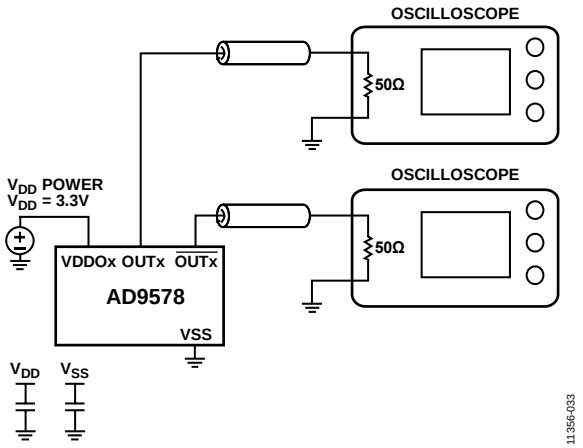

Figure 25. HCSL Test Circuit

INPUT/OUTPUT TERMINATION RECOMMENDATIONS

See Figure 26 to Figure 30 for recommendations on how to connect the outputs.

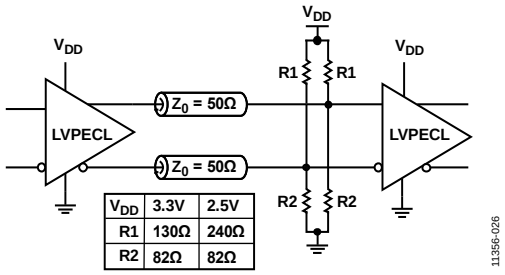

Figure 26. Thevenin Equivalent DC-Coupled LVPECL Termination

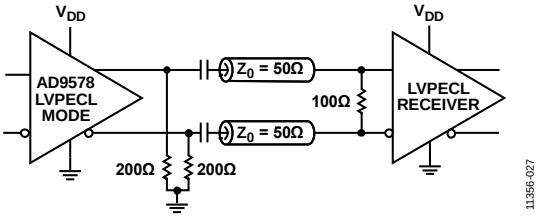

Figure 27. AC-Coupled LVPECL Termination

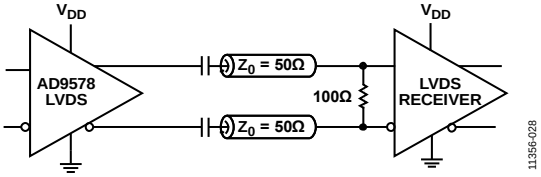

Figure 28. AC-Coupled LVDS

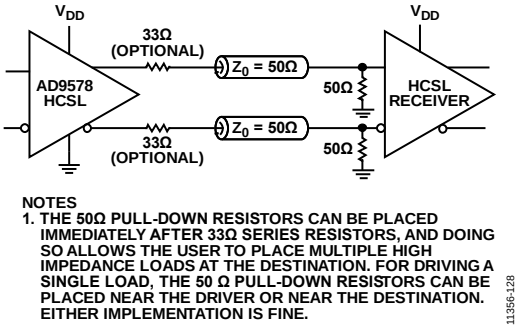

Figure 29. DC-Coupled HCSL

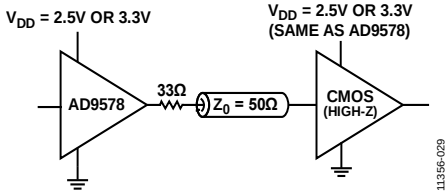

Figure 30. DC-Coupled LVCMOS Termination

GETTING STARTED

CHIP POWER MONITOR AND STARTUP

The AD9578 monitors the voltage on the power supplies at power-up. When power supplies are greater than 2.1 V ± 0.1 V, the device generates an internal reset pulse, at which time, the AD9578 loads the values programmed in OTP memory. Do not use the SPI until 4 ms after power-up to ensure that all registers are correctly loaded from the OTP memory and that all internal voltages are stable.

It is possible for the user to overwrite any value stored in the OTP memory if the security bits in Register 0x00 were not set at the time the OTP programming occurred. Take care not to overwrite the factory programmed calibrations (Register 11 through Register 14).

When programming the device through the serial port, write unused or reserved bits to their default values as listed in the register map.

DEVICE REGISTER PROGRAMMING USING A REGISTER SETUP FILE

The evaluation software contains a programming wizard and a convenient graphical user interface that assists the user in determining the optimal configuration for the device. It generates a register setup file with a .STP extension that is easily readable using a text editor. These registers can be loaded directly into the AD9578.

OTP PROGRAMMING

The AD9578 has 444 bits of OTP memory. OTP stores the nonvolatile default configuration used on power-up.

The default configuration is determined and programmed by the user. Use the SPI to overwrite these bits and change the operation of the AD9578 after power-up. The SPI Programming section describes how the bits affect the device operation and how to use the SPI to modify them.

THEORY OF OPERATION

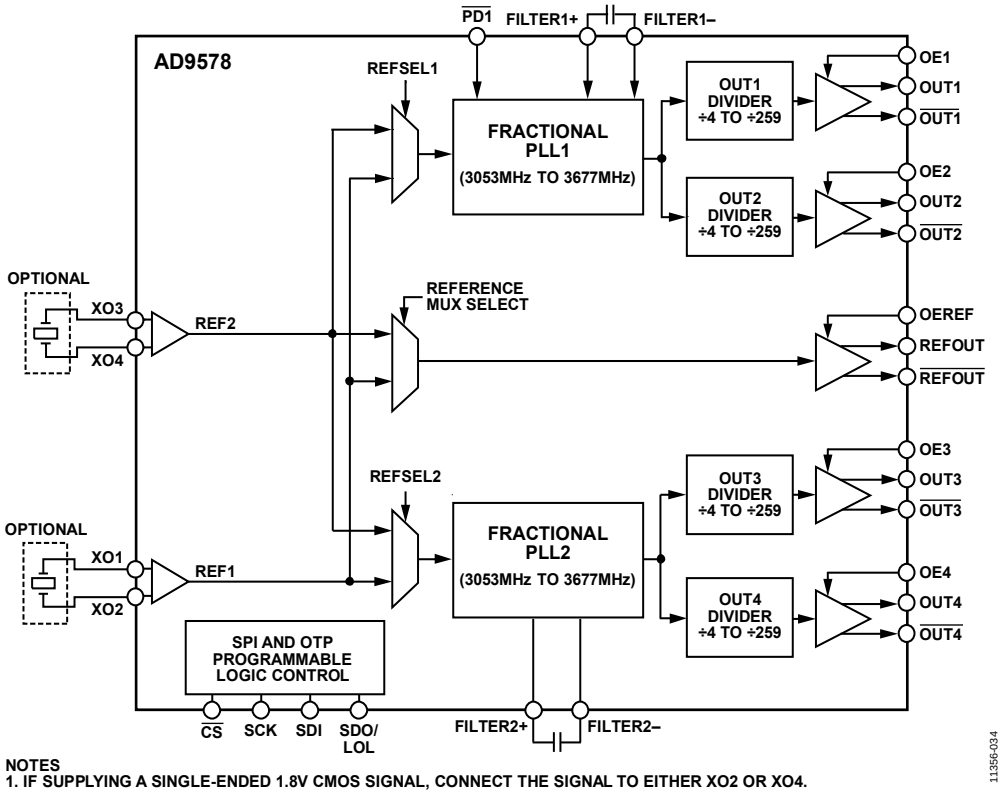

Figure 31. Detailed Block Diagram

OVERVIEW

The AD9578 is a dual synthesizer with four programmable outputs. Two PLLs, with either a crystal or external reference input frequency, produce up to four unique output frequencies. Output format standards on each output include LVCMOS, LVDS, LVPECL, and HCSL. The input crystal is a low cost fundamental mode type, and the AD9578 provides programmable gain and load capacitors. Alternatively, an input reference clock can be used for either or both PLLs. The crystal or external reference frequency is available on the REFOUT/$\overline{\text{REFOUT}}$ pins.

The PLLs operate independently but may share the input reference, if desired. Three modes of operation can be selected: integer mode, fractional mode, and rational mode. The integer mode provides the lowest noise and behaves like a conventional PLL with whole number dividers. The fractional mode allows the feedback divider to have an 8-bit integer part and a 28-bit fractional part, resulting in a frequency resolution of 0.1 ppb or better. Rotary traveling wave oscillator (RTWO)-based VCOs operate at rates from 3053 MHz to 3677 MHz. Rational mode is similar to fractional mode, but allows the user to specify the feedback divider in terms of one integer divided by another. There are two output dividers on each VCO, with a range of 4 to 259. To prevent an output frequency gap between 750.8 MHz and 777.25 MHz, a special divide by 4.5 mode is also included. Any output frequency between 11.8 MHz and 919 MHz can be produced with a frequency error of 0.1 ppb or better.

Additional features include loss of lock indicators, smooth change of output frequency for small frequency steps, and SPI control. The AD9578 can be configured through the SPI, factory programmed, user programmed, or any combination thereof. The AD9578 ships with a default power-up configuration programmed into OTP memory. All settings can be reprogrammed after power-up using the SPI.

At offset frequencies below the PLL bandwidth (which is typically 300 kHz), the PLL tracks and multiplies the reference phase noise. The crystal input offers a very low phase noise reference, ensuring that the output phase noise near the carrier is low. When selecting the reference input signal, ensure that the phase noise of the reference input is low enough to meet the system noise requirements.

PLL AND OUTPUT DRIVER CONTROL

Table 14. Register 2 Bits

Bits	Bit 7	Bit 6	Bit 5	Bit 4	Bit 3	Bit 2	Bit 1	Bit 0
[23:16]	Unused				MR (master reset)	MR enable (set to 1 to enable MR)	REFOUT	REFOUT enable (override OEREF pin)
[15:8]	OUTPUT4	Override OE4 pin	OUTPUT3	Override OE3 pin	OUTPUT2	Override OE2 pin	OUTPUT1	Override OE1 pin
[7:0]	REFSEL2	REFSEL2 enable (set to 1 to enable REFSEL2)	REFSEL1	REFSEL1 enable (set to 1 to enable REFSEL1)	PLL2	PLL2 enable (set to 1 to enable PLL2)	PLL1	PLL1 enable (override $\overline{PD1}$ pin)

Table 15. Register 4 Bits

Bits	Bit 7	Bit 6	Bit 5	Bit 4	Bit 3	Bit 2	Bit 1	Bit 0
[15:8]	XTAL frequency trim	XTAL Capacitance Value[2:0]			Unused	XTAL Gain[2:0]		
[7:0]	OUTPUT4 Mode[1:0]		OUTPUT3 Mode[1:0]		OUTPUT2 Mode[1:0]		OUTPUT1 Mode[1:0]	

OVERVIEW

The AD9578 has five output drivers: OUTPUT1, OUTPUT2, OUTPUT3, OUTPUT4, and REFOUT. Each output can be individually configured as LVCMOS, LVDS, LVPECL, or HCSL.

Each output has an output enable pin (OEx). Pin control of the outputs is enabled when the corresponding override OEx pin bit in Register 2 is low. When configured this way, the OUTPUTx bit is read only and indicates the status of the OEx pin.

When the override OEx pin (where x = 1 to 4) bit is high, the OUTPUTx bit in Register 2 turns OUTPUTx on and off. See Table 14 for the contents of Register 2.

The AD9578 ships with the default start-up output enable and output format functionality selected by the user. After power-up, the user can override the default programming through the SPI.

PLL ENABLE/DISABLE

Each output is enabled only if the associated PLL is powered up. Bits[3:0] in Register 2 control this function. There are two ways to power up/down PLL1. If the PLLx enable bit is 0, the user can power down PLL1 by pulling the $\overline{PD1}$ pin low. If the PLLx enable bit is high, PLL1 is powered up/down using the PLL1 bit (Bit 1). PLL2 is under software control only. Therefore, always set Bit 2 to 1. The PLL2 bit (Bit 3) powers up/down PLL2.

Reading the Hardware OEx Pin States

By default, the AD9578 OEx pins determine which outputs are enabled. If the corresponding override OEx pin bits are not set in Register 2, the user can read the states of these pins by reading Register 2. Note that the OE1, OE2, OE3, and OE4 pins have 75 kΩ pull-up resistors.

Disabling Hardware OEx Pin Control

To disable the hardware pin control, the associated override OEx pin bit can be set in Register 2 (see Table 14). The override OEx pin bits are OTP, allowing the device to power up with any output forced on, forced off, or controlled by the OEx pin. In Register 2, when the override OEx pin bit is set to 1, the corresponding OEx pin is ignored, and the OUTPUTx bit enables or disables an input or output. To enable an output, both the override OEx pin bit and the OUTPUTx bit in Register 2 must be set to 1.

Glitch-Free Output Enable

When an output changes from disabled to enabled, there is an approximate 2 µs delay before switching begins. During this delay, the outputs settle to the appropriate dc differential levels according to the configured mode. After this initial delay, the outputs begin toggling without glitches or runt pulses.

Output Disable Sequence

When an output changes from enabled to disabled, it stops switching at the appropriate dc levels according to the configured mode. After it has stopped switching, the biases are disabled and the output is set to high impedance.

OUTPUT DRIVER FORMAT

The default power-up output mode is factory programmed to single-ended LVCMOS. The user can override the defaults using the serial port, and the drivers can be programmed simultaneously.

Table 16. Output Driver Modes[1]

OUTPUTx Mode[1:0]	Output Mode
00	LVCMOS
01	LVDS
10	LVPECL
11	HCSL

[1] To disable any output through the SPI, the corresponding override OEx pin bit and OUTPUTx bit must be set to 1 and 0, respectively. This prevents any condition of the external OEx pin from affecting the state of the output driver. In OTP programming, setting the override bit to 1 disables the output pin permanently.

Note that all of the output modes are differential except LVCMOS mode. When LVCMOS is selected, the positive output pin is LVCMOS, and the negative (complementary) output pin is high impedance. The LVCMOS output driver mode can be used for output frequencies ≤250 MHz, and a series termination resistor is recommended (see Figure 30). Place a series termination 33 Ω resistor within 7 mm of the AD9578. A 50 Ω transmission line configured this way is impedance matched. However, differential output modes are preferred over single-ended modes to preserve the high performance of the AD9578 and to reduce noise pickup and generation.

OUTPUT CONFIGURATION EXAMPLE

Table 17 and Table 18 show how Register 2 and Register 4, respectively, are used to configure the AD9578 inputs and outputs.

PLL1 and PLL2 are enabled so that the output drivers connected to them are also enabled.

The OE1 and OE2 pins are ignored, OUTPUT1 is enabled and in LVCMOS mode, and OUTPUT2 is disabled. The OE3 and OE4 pins determine the state of OUTPUT3 and OUTPUT4, respectively. The REFOUT driver is disabled, OUTPUT3 is LVDS, and OUTPUT4 is LVPECL.

The X in Table 17 and Table 18 indicates that the register bit is not related to output driver configuration.

Table 17. Example of Output Driver Configuration Using Register 2

Bits	Bit 7	Bit 6	Bit 5	Bit 4	Bit 3	Bit 2	Bit 1	Bit 0
[23:16]	Unused = XXXX				MR (master reset) = 0	MR enable = 1	REFOUT = 0	REFOUT enable (override OEREF pin) = 1
[15:8]	OUTPUT4 = X	Override OE4 pin = 0	OUTPUT3 = X	Override OE3 pin = 0	OUTPUT2 = 0	Override OE2 pin = 1	OUTPUT1 = 1	Override OE1 pin = 1
[7:0]	REFSEL2 = X	REFSEL2 enable = X	REFSEL1 = X	REFSEL1 enable = X	PLL2 = 1	PLL2 enable =1	PLL1 = 1	$\overline{\text{PLL}}$ enable (override $\overline{\text{PD1}}$ pin) = 1

Table 18. Example of Output Driver Configuration Using Register 4

Bits	Bit 7	Bit 6	Bit 5	Bit 4	Bit 3	Bit 2	Bit 1	Bit 0
[15:8]	XTAL1 frequency trim = X	XTAL1 Capacitance Value[2:0] = XXX			Unused = X	XTAL1 Gain[2:0] = XXX		
[7:0]	OUTPUT4 Mode[1:0] = 10		OUTPUT3 Mode[1:0] = 01		OUTPUT2 Mode[1:0] = XX		OUTPUT1 Mode[1:0] = 00	

REFERENCE INPUT

Table 19. Register 2 Bits

Bits	Bit 7	Bit 6	Bit 5	Bit 4	Bit 3	Bit 2	Bit 1	Bit 0
[23:16]	Unused				MR (master reset)	MR enable (set to 1 to enable MR bit)	REFOUT	REFOUT enable (override OEREF pin)
[15:8]	OUTPUT4	Override OE4 pin	OUTPUT3	Override OE3 pin	OUTPUT2	Override OE2 pin	OUTPUT1	Override OE1 pin
[7:0]	REFSEL2	REFSEL2 enable (set to 1 to enable REFSEL2 bit)	REFSEL1	REFSEL1 enable (set to 1 to enable REFSEL1 bit)	PLL2	PLL2 enable (set to 1 to enable PLL2 bit)	PLL1	PLL1 enable (override $\overline{PD1}$ pin) (set to 1 to enable PLL1 bit)

Table 20. Register 3 Bits

Bits	Bit 7	Bit 6	Bit 5	Bit 4	Bit 3	Bit 2	Bit 1	Bit 0
[31:24]	REFOUT mode[1:0]		Unused	Enable activity detect (set to 1)	Reference mux select	Enable XTAL1	Unused	
[23:16]	Unused				Enable OUTPUT4 divider	Enable OUTPUT3 divider	Enable OUTPUT2 divider	Enable OUTPUT1 divider
[15:8]	Unused	LVCMOS Edge Trim[2:0]			Enable OUTPUT4 4.5 mode	Enable OUTPUT3 4.5 mode	Enable OUTPUT2 4.5 mode	Enable OUTPUT1 4.5 mode
[7:0]	Exponent[3:0]				Mantissa[3:0]			

OVERVIEW

Two reference inputs are available for the PLLs. The user can connect either a crystal or an input clock to the XO1/XO2 pins or the XO3/XO4 pins. The allowable reference input logic types are 1.8 V LVCMOS, ac-coupled LVDS, and ac-coupled LVPECL. The crystal oscillators accept standard crystals from 22 MHz to 54 MHz. Either reference can be used by either PLL through the internal selectors. Likewise, either reference can be buffered to the REFOUT driver, which supports LVCMOS, LVDS, LVPECL, or HCSL format. OTP fuses are available to automatically load the user settings loaded each time the chip powers up or resets.

Register 2 contains the reference input control bits, Bits[7:4], and is shown in Table 19. Register 3 contains the configuration bits for the input reference buffer, and reference output, shown in Table 20. See the PLL and Output Driver Control section for information about the control of the reference output buffer.

REFERENCE INPUT

Table 21. PLL1 Reference Selection

Register 2		Register 3	
REFSEL1 Enable	REFSEL1	Enable XTAL1	PLLx Reference
0	X[1]	X[1]	Reference 1 (XO1, XO2)
1	0	X[1]	Reference 1 (XO1, XO2)
1	1	X[1]	Reference 2 (XO3, XO4)

[1] X = don't care.

Table 22. PLL2 Reference Selection

Register 2		Register 10	
REFSEL2 Enable	REFSEL2	Enable XTAL2	PLLx Reference
0	X[1]	X[1]	Reference 1 (XO1, XO2)
1	0	X[1]	Reference 1 (XO1, XO2)
1	1	X[1]	Reference 2 (XO3, XO4)

[1] X = don't care.

CRYSTAL OSCILLATOR AMPLIFIER ENABLE

The crystal oscillator amplifier is automatically enabled when either the PLLx or REFOUT bit in Register 2 uses the crystal oscillator for either Reference 1 or Reference 2. Otherwise, the crystal oscillator amplifier is disabled if neither the PLLx nor REFOUT bit selects that input. However, this setting can be overridden with the enable XTAL1 bit in Register 3 and enable XTAL2 bit in Register 10. Setting these bits forces the corresponding crystal oscillator on.

These bits are useful to allow a crystal to power up and stabilize before it is needed. However, these bits are usually set to 0 under normal operation.

REFOUT/$\overline{\text{REFOUT}}$ SOURCE SELECTION

The REFOUT/$\overline{\text{REFOUT}}$ pins can be used to buffer the crystal oscillator signal. Like the other outputs, it can be set to LVPECL, LVDS, HCSL, or LVCMOS format (see the PLL and Output Driver Control section for more information).

CRYSTAL OSCILLATOR INPUTS

Table 23. Register 4 Bits

Bit Range	Bit 7	Bit 6	Bit 5	Bit 4	Bit 3	Bit 2	Bit 1	Bit 0
[15:8]	XTAL1 frequency trim	XTAL1 Capacitance Value[2:0]			Unused	XTAL1 Gain[2:0]		
[7:0]	OUTPUT4 Mode[1:0]		OUTPUT3 Mode[1:0]		OUTPUT2 Mode[1:0]		OUTPUT1 Mode[1:0]	

Table 24. Register 10 Bits

Bit Range	Bit 7	Bit 6	Bit 5	Bit 4	Bit 3	Bit 2	Bit 1	Bit 0
[15:8]	XTAL2 frequency trim	XTAL2 Capacitance Value[2:0]			XTAL2 Gain[2:0]			XTAL2 Enable
[7:0]	Sync Step[3:0]				Sync DIVN[3:0]			

OVERVIEW

The quartz crystal inputs, XO1/XO2 and XO3/XO4, accept standard 8 pF to 12 pF AT cut crystals from 22 MHz to 54 MHz. These inputs have programmable gain and programmable on-chip load capacitors so that a wide range of crystals can be used.

In general, use the highest frequency crystal for lowest phase noise. If integer modes of PLL operation are possible, select the crystal such that the overall frequency multiplication is an integer value for lowest noise.

XTAL Enable

Setting the enable XTAL1 bit in Register 3 (for the crystal connected to the XO1/XO2 pins), or enable XTAL2 in Register 10 (for the crystal connected to the XO3/XO4 pins), and the REFSELx bit in Register 2 enables the second crystal oscillator. The second crystal oscillator (OSC2) is on Pin 45 and Pin 46, XO4 and XO3, respectively. OSC2 is useful if the crystal frequency on the first crystal oscillator (OSC1) results in an integer boundary spur; OSC2 can be set to a different frequency that does not cause an integer boundary. OSC2 is automatically enabled if it is selected and is disabled otherwise.

CRYSTAL OSCILLATOR GAIN

Set the XTALx frequency trim bit in Register 4 and Register 10 if the crystal frequency is 33 MHz or lower. The recommended values for the bits in Register 4 and Register 10 are given in Table 25.

Table 25. XTALx Gain[2:0] Values

Crystal Frequency (MHz)	XTALx Gain[2:0] ESR = 25 Ω	XTALx Gain[2:0] ESR = 35 Ω	XTALx Gain[2:0] ESR = 45 Ω	XTALx Frequency Trim Bit
22	0	1	3	1
27	1	2	4	1
33	2	3	5	1
34	1	2	3	0
39	2	3	4	0
44	3	4	5	0
49	4	5	6	0
54	5	6	7	0

CRYSTAL LOAD CAPACITORS

The AD9578 has internal crystal load capacitors that are used as the load capacitance for an external crystal. XTALx Capacitance Value[2:0], Bits[14:12] in Register 4 (for the crystal connected to the XO1/XO2 pins) or Register 10 (for the crystal connected to the XO3/XO4 pins), set the on-chip load capacitance, as shown in Table 36.

PLLs

OVERVIEW

The two PLLs in the AD9578 operate independently. Each PLL consists of an input reference frequency (which can be shared), a phase/frequency detector, loop filter, RTWO-based VCO, complex feedback divider and phase selector, and two output dividers. The feedback divider can operate in two distinct modes: integer and fractional.

Using the AD9578 evaluation software is the easiest way to configure the AD9578. See the PLL Modes of Operation section for more information on the various register settings.

In the PLL Modes of Operation section, the possible feedback divider settings is expressed in Q notation, QN.M, where N (the integer part) is eight bits and M (the fractional part) is 28 bits.

The S[1:0] value represents the amount of phase interpolation used to represent a portion of the fractional part of the divider value. When S[1:0] = 3, there is no phase interpolation. When S[1:0] = 0, there is phase interpolation in 1/8 increments.

PLL MODES OF OPERATION

The PLLs on the AD9578 have three modes of operation: integer, fractional, and rational. In this section, PLLx refers to either PLL1 (whose settings are in Register 6 and Register 7) or PLL2 (whose settings are Register 8 and Register 9).

The feedback divider has two parts: an 8-bit integer part and a 28-bit fractional part. The fractional part is modulated by a multistage noise shaping (MASH) modulator. The order of the MASH modulator is set in PLLx MASH[2:0] in Register 7 and Register 9, Bits[31:29].

Set the value of MASH[2:0] to 0 for integer mode, and 1 to 4 for fractional mode. Setting PLLx MASH[2:0] = 2 usually provides the lowest jitter for settings of PLLx Fractional Feedback Divider[27:0] greater than 2% from an integer. The value of S[1:0] is as follows: S[1:0] = 0, 1, and 2 results in eight, four, and two phases, respectively. Typically, a value of 0 for S[1:0] is best.

Fractional Mode

The fractional mode allows the feedback divider to take on a value of the Q notation, QN.M, where N (the integer part) is eight bits and M (the fractional part) is 28 bits. The VCO frequency divided by the feedback divider must always equal the reference frequency.

$$f_{VCO} = f_{IN} \times \left[INT + \frac{FRAC}{2^{28}} \right]$$

where:
INT is PLLx Integer Feedback Divider[7:0] in Register 6 (for PLL1) or Register 8 (for PLL2).
FRAC is PLLx Fractional Feedback Divider[27:0] in Register 6 (for PLL1) or Register 8 (for PLL2)

Rational Mode

Rational mode allows the user to express the feedback divider as a ratio of rational numbers. Rational mode is enabled by setting the rational mode bit (Bit 2 in Register 7 (for PLL1) or Register 9 (for PLL2)) to 1.

Table 26. Rational Mode Feedback Divider Calculation

S[1:0]	Feedback Divider (FBDIV)[1]	PLLx Fractional Feedback Divider[27:25]
S = 0	FBDIV = A + (1/8)(B + C/D)	B = 0, 1, … , 7 (Bits[27:25])
S = 1	FBDIV = A + (1/4)(B + C/D)	B = 0, 1, 2, 3 (Bits[27:26])
S = 2	FBDIV = A + (1/2)(B + C/D)	B = 0, 1 (Bit 27)
S = 3	FBDIV = A + C/D	B ignored (Bits[27:25] = 000b)

[1] A is PLLx Integer Feedback Divider[7:0], C is PLLx Fractional Feedback Divider[24:9], D is PLLx Modulus Value[15:0].

Integer Mode

Integer mode provides the lowest possible phase noise and behaves like a traditional integer PLL in which the feedback divisor is an integer. Integer mode is a special case of rational mode in which the rational mode bit is zero, and the C and D terms in Table 26 are 0.

Integer mode is set when the following conditions are met:

- PLLx MASH[2:0] = 000b
- PLLx Fractional Feedback Divider[24:0] = 0x000
- If PLLx S[1:0] = 3 (no phase interpolation), PLLx Fractional Feedback Divider[27:25] must be zero.
- If PLLx S[1:0] = 2 (phase interpolation of ½ or 0) PLLx Fractional Feedback Divider[26:25] must be zero.
- If PLLx S[1:0] = 1, (phase interpolation of 1/4, 1/2, 3/4, or 0) PLLx Fractional Feedback Divider[25] must be zero.

When programming integer mode with S[1:0] = 0, the AD9578 is in integer mode (with better noise performance), even though the feedback divider has a fraction (for example, 1/8, 2/8, 3/8). When using this mode, the user must reset the feedback divider by writing a 1 to Bit 14 of Register 7 (for PLL1) or Register 9 (for PLL2).

NCO Functionality

Fractional mode allows operation as a precision NCO, which offers the capability of digitally pulling the output frequency using precise numerical control. A digital alternative to analog VCXOs that pull the crystal using varactors, NCO functionality enables completely digitally controlled PLLs that trim the output frequency through the fast SPI bus. Precise numerical control enables PLL applications to be implemented digitally within FPGAs and other digital ICs. Writing the AD9578 registers using an SPI bus that runs at 100 MHz allows the AD9578 output frequency to be updated frequently. The continuous trimming range of the output is greater than 1000 ppm, resulting

in better tracking range than is possible with analog VCXO-based PLLs.

The output frequencies change smoothly with no sudden phase step when the change to the feedback divider is small (for example, a change in phase or a few parts per million in frequency.) The change in the feedback divider is instantaneous, but the PLL response causes the PLL to change its frequency gradually. Thus, any changes small enough not to cause lock disturbance are smooth and continuous.

VCO

The VCO has 28 frequency bands. PLLx Frequency Select[4:0] in Register 7 (for PLL1) or Register 9 (for PLL2) selects the VCO band according to Table 27. Using the AD9578 evaluation software is the easiest way to ensure that these bits are set correctly.

Table 27. VCO Frequencies and K_{VCO} Band Settings

PLLx Frequency Select[4:0][1]		VCO Min (MHz)	VCO Nom (MHz)	VCO Max (MHz)	PLLx K_{VCO} Band[2]
Dec	Binary				
0	00000	3642	3654	3677	0
1	00001	3615	3623	3642	0
2	00010	3583	3597	3615	0
3	00011	3556	3568	3583	0
4	00100	3532	3542	3556	0
5	00101	3509	3518	3532	0
6	00110	3486	3496	3509	0
7	00111	3463	3473	3486	0
8	01000	3440	3450	3463	0
9	01001	3416	3426	3440	0
10	01010	3391	3402	3416	0
11	01011	3375	3382	3391	0
12	01100	3360	3366	3375	0
13	01101	3345	3350	3360	0
14	01110	3307	3322	3345	1
15	01111	3290	3298	3307	1
16	10000	3268	3278	3290	1
17	10001	3249	3256	3268	1
18	10010	3228	3237	3249	1
19	10011	3209	3217	3228	1
20	10100	3189	3198	3209	1
21	10101	3171	3179	3189	1
22	10110	3154	3161	3171	1
23	10111	3135	3143	3154	1
24	11000	3119	3126	3135	1
25	11001	3100	3108	3119	1
26	11010	3084	3091	3100	1
27	11011	3053	3072	3084	1

[1] PLLx Frequency Select[4:0] is in Register 0x07 for PLL1 and Register 0x09 for PLL2.
[2] The PLLx K_{VCO} band bits are in Register 0x0C for PLL1 and Register 0x0E for PLL2.

The PLLx K_{VCO} band bit (Bit 31 in Register 0x0C for PLL1 and Bit 31 in Register 0x0E for PLL2) must be set to 1 for PLLx Frequency Select[4:0] values between 14 and 27, and must be 0 for Frequency Select[4:0] values between 0 and 13. The reserved bits in Register 11, Register 12, Register 13, and Register 14 are factory calibrated values, and must not be changed.

CHARGE PUMP

The PLL charge pump current is programmed in Register 7 and Register 9, Bits[20:16], the CUR[4:0] value. CUR[4:0] can optimize the PLL bandwidth for minimum integrated phase noise. For crystals of approximately 50 MHz, CUR[4:0] values near 15 often produce the lowest noise. The AD9578 evaluation software generates these values for the user.

See Table 29 for a variety of output frequencies and settings for PLLx MASH[2:0], S[1:0], and CUR[4:0] when using a 49.152 MHz crystal.

OUTPUT DIVIDERS

The output divider divides the RTWO frequency down to the required output frequency. There is one divider per output, and the divide ratios are located in Register 5 (see Table 28).

Table 28. Output Divider Locations in Register 5

Bits	Bits[7:0]
[31:24]	OUTPUT4 Divider[7:0]
[23:16]	OUTPUT3 Divider[7:0]
[15:8]	OUTPUT2 Divider[7:0]
[7:0]	OUTPUT1 Divider[7:0]

The output divider has a range of 4 to 259. Writing 0x04 to Address 0xFF to the output divider results in a divide ratio that is the same as the value stored in the register. Writing 0x00 to Address 0x03 to the output divider results in a divide ratio of 256 to 259, respectively.

For the special case of frequencies between 750 MHz and 778 MHz, which cannot be accessed with divide by 4 or divide by 5, a divide by 4.5 is provided. To divide by 4.5, set the enable OUTPUTx 4.5 mode bit in Register 3, Bits[11:8]. When the OUTPUTx 4.5 mode bit is set, the associated output divider ignores the value in Register 5 and divides by 4.5.

LOSS OF LOCK INDICATOR

The lock status of a PLL can be monitored via the PLLx lock detect bit in Register 0x0F, Bit 21 (for PLL1) or Bit 23 (for PLL2). A value of 1 indicates lock and is the normal condition. A value of 0 indicates out of lock, or the absence of an input reference. If the user programs Bit 0 of Register 6 (PLL1) and/or Register 8 (PLL2) to 1, the SDO/LOL pin changes function to the logical AND of the PLL1 and PLL2 loss of lock (LOL) function.

RESETS

If the PLLx MASH (Bits[31:29] in Register 7 for PLL1 or Register 9 for PLL2) is changed, issue a reset by toggling the reset feedback divider bit in Register 7 or Register 9, Bit 14.

EXAMPLE VALUES FOR 49.152 MHZ CRYSTAL

Table 29 shows the output frequency settings when using a 49.152 MHz crystal, TXC Part Number 8Z49100001, 2.5 mm × 2.0 mm, 49.152 MHz, ±30 ppm, C_L = 9 pF, maximum ESR = 50 Ω.

Table 29. Register Settings for Various Output Frequencies with a 49.152 MHz Crystal

Output Frequency (MHz)	PLLx Feedback Divider	OUTPUTx Divider[7:0]	Frequency Select[4:0]	PLLx K_{VCO} Band	PLLx MASH[2:0]	S[1:0]	CUR[4:0]	VCO Frequency (MHz)
125.000000	71.207682292	28	6	0	2	0	17	3500
155.520000	69.609375	22	9	0	2	0	16	3421.44
156.250000	66.757202148	21	16	1	2	0	16	3281.25
159.375000	68.092346191	21	13	0	2	0	16	3346.875
161.132813	72.121620402	22	4	0	2	0	16	3544.92189
164.355469	70.220232117	21	8	0	2	0	19	3451.46485
166.628571	74.581473023	22	0	0	2	0	19	3665.82856
167.331646	68.087421061	20	13	0	2	0	19	3346.63292
168.040678	71.79472327	21	5	0	2	0	15	3528.85424
172.642299	73.760747864	21	1	0	2	0	19	3625.48828
173.370748	74.071974854	21	1	0	2	0	22	3640.78571
174.105369	74.385838806	21	0	0	2	0	19	3656.21275
174.153733	70.863335368	20	7	0	2	0	19	3483.07466
174.703084	71.086866862	20	6	0	2	0	16	3494.06168
176.095145	71.653297933	20	5	0	2	0	15	3521.9029
176.838163	64.760069458	18	21	1	2	0	15	3183.08693
212.500000	69.173177083	16	10	0	2	0	14	3400
425.000000	69.173177083	8	10	0	2	0	14	3400
622.080000	63.281250000	5	25	1	2	0	16	3110.4
625.000000	63.57828776	5	24	1	2	0	14	3125
637.500000	64.849853516	5	21	1	2	0	13	3187.5
644.531250	65.565109253	5	19	1	2	0	12	3222.65625
657.421875	66.876411438	5	16	1	2	0	7	3287.10938
666.514286	67.801339315	5	14	1	3	0	15	3332.57143
669.326582	68.087420858	5	13	0	2	0	19	3346.63291
672.162712	68.375926921	5	12	0	2	0	9	3360.81356
690.569196	70.248331299	5	8	0	3	0	15	3452.84598
693.482991	70.544737854	5	7	0	2	0	12	3467.41495
696.421478	63.759290588	4.5	24	1	2	0	16	3133.89665
696.614931	70.863335266	5	7	0	2	0	19	3483.07465
698.812335	71.086866760	5	6	0	2	0	18	3494.06167
704.380580	71.653297933	5	5	0	2	0	15	3521.9029
707.352650	64.760069275	4.5	21	1	2	0	15	3183.08693

SPI PROGRAMMING

OVERVIEW

The AD9578 SPI bus transfers data in byte multiples. All transfers are most significant byte and most significant bit first.

At power-up, the AD9578 loads the values programmed in OTP memory. Thereafter, the SPI can be used to overwrite any value. Write 0 to unused or reserved bits, and do not overwrite factory programmed calibrations in Register 11 through Register 14.

Note that throughout this data sheet, the multifunction SDO/LOL pin is referred to either by the entire pin name or by a single function of the pin, for example, SDO, when only that function is relevant.

SPI DESCRIPTION

The SPI is in reset on power-up. All fuse values are loaded into the SPI and those become the default configuration for the device. The SPI is inaccessible for the duration of the fuse reset cycle.

Setting the $\overline{CS}$ pin high disables the SPI controller and resets it to its idle state. SDO is high impedance when $\overline{CS}$ is high. Setting $\overline{CS}$ to 0 enables the SPI controller (awaiting the control/address byte). In this mode, the controller responds to events on SCK.

SCK is the clock input to the SPI. SDI is the data input to the SPI. Data must be valid on the rising edge of SCK. SDO is the data output from the SPI.

On the falling edge of $\overline{CS}$, the SPI controller expects to see a series of eight SCK clock pulses and eight bits of data on SDI, valid through the rising edge of the clock. As shown in Figure 32, the first four bits are the operation code (opcode), and the last four bits are the register to be addressed. Table 30 contains the AD9578 opcodes that are used by the interface.

The default state on startup and when $\overline{CS}$ = high is Opcode 0 (OP[3:0] = 0000), or no operation. Opcode 2, the read opcode (OP[3:0] = 0010), is followed by one or more series of eight SCK pulses. Data from the register addressed by ADDR[3:0] appear on SDO most significant bit (MSB) first. The number of eight-pulse cycles is determined by the type of register defined at ADDR[3:0]. Opcode 1, the write opcode (OP[3:0] = 0001), is followed by one or more series of eight SCK pulses, with data to be written to the addressed register placed on SDI and valid at the rising edge of SCK. The new values take effect immediately after a write operation on the falling edge of the last SCK pulse.

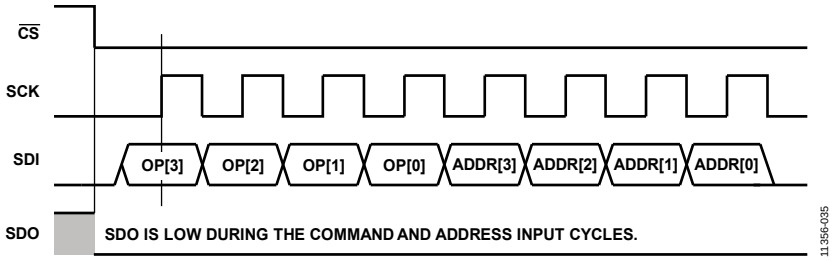

Figure 32. Control and Address Byte Format

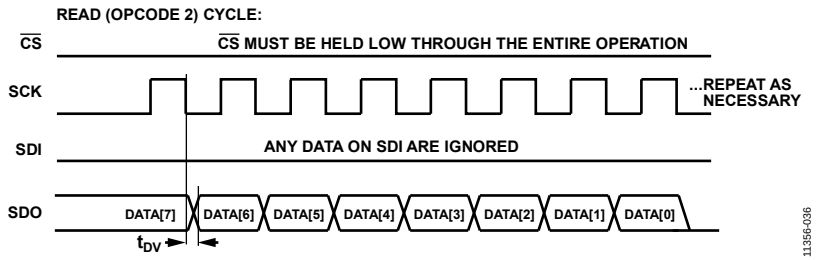

Figure 33. Opcode 2, Read Cycle

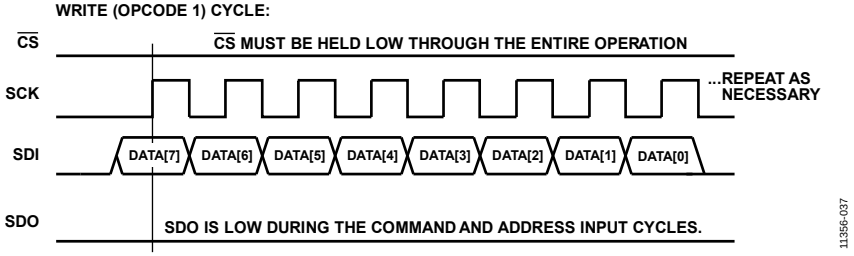

Figure 34. Opcode 1, Write Cycle

Table 30. Opcode x Settings

Name	OP[3:0]	ADDR[3:0]	Operation/Command
Opcode 0	0000	Ignored	No operation
Opcode 1	0001	Register to be written	Write data
Opcode 2	0010	Register to be read	Read data
Opcode 3	0011	Ignored	Do not use
Opcode 4	0100	0000	Fuse reset (reloads OTP programmed values)
Opcode 5	0100	0001	OTP program
Opcode 6	0100	1110	OTP program enable
Opcode 7	0100	1111	OTP program disable
Opcode 8	0101	Register to be queried	Query register length

OTP PROGRAMMING

The AD9578 has OTP registers so that a desired configuration can be programmed as the power-on default. All OTP programmable registers (except for those set at the factory) are initially set to the default values in the register map. The desired start-up configuration is programmed into the OTP bits by sending the OTP program command after the registers are set to their desired values. Note that the AD9578 must be powered at V_{DD} = 3.3 V to perform OTP programming because the $\overline{CS}$ pin must never be more than 2.5 V above V_{DD}.

The $\overline{CS}$ pin has two functions: serial port chip select and OTP programming enable. To access the SPI normally, use the $\overline{CS}$ pin at normal digital LVCMOS levels (between 0 V and V_{DD}.) To program the OTP, follow the OTP program procedure:

1. Enable OTP programming by setting the $\overline{CS}$ pin to 5.5 V.
2. Configure the SPI registers to the desired configuration.
3. Send the OTP program enable command, Opcode 6.
4. Send the OTP program command, Opcode 5.
5. Send the OTP program disable command, Opcode 7.
6. Set the $\overline{CS}$ pin back to 0 V.
7. Send the fuse reset command, Opcode 4, to load the new register values. This final step is a verification of the OTP programming procedure.

The precise timing of the OTP programming sequence is ensured by on-board circuitry, and is 800 µs minimum per register. While either the OTP program or the fuse reset commands are executing, the SDO/LOL pin goes high, and it returns to zero at the end of the fuse reset or OTP program cycle. The host controlling the AD9578 must monitor the state of the SDO/LOL pin to determine when it may continue SPI communication. SPI communication from the host is ignored during OTP programming.

Registers labeled read only have no associated fuses. The Register Map Bit Descriptions section has details about which registers are read only.

Security[15:0] are per register security bits. Setting the security bit for a register disables writing to that register so that values in the register can no longer be changed with SPI write commands. By disabling writing, OTP programing is also disabled. All OTP programing, including the security bits, can be performed at the same time. The new configuration settings for read/program bits, such as the security bits, is not applied until a fuse reset cycle or power cycle to the chip. That is, writing a 1 to Security[15:0] does not change the security setting, but writing a 1 to Security[15:0] followed by the OTP program and fuse reset commands does. Note that OTP programming the Security0 bit prevents further writing to Security[15:0] and, therefore, prevents any other security bits from being set in the future. Other than the security bit settings, there is no limitation to the number of times that the OTP program command can be executed. This allows an incremental approach in which certain registers are factory calibrated, preprogrammed, and optionally secured to prevent further modification.

Changing the OTP default for a single register is difficult because the OTP programming sequence is not random access. To blow the fuse of a single bit, it is necessary to first send a fuse reset command to ensure that all registers contain default values. Then, change a single register bit and send the OTP program command, Opcode 5 (see Table 30).

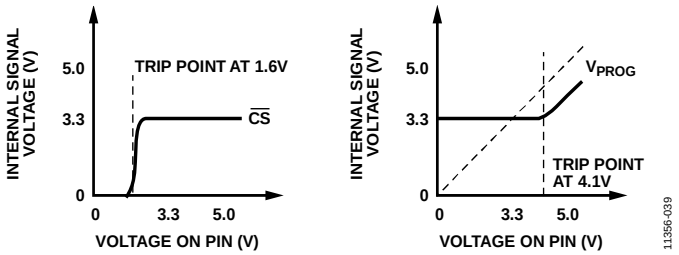

Figure 35. $\overline{CS}$ Pin Function

SPI Configuration

The AD9578 can be programmed after power-up through the SPI. This section describes how to set a specific configuration in the SPI registers.

1. Prepare default values. The AD9578 evaluation software is an ideal way to determine the optimal default values of the AD9578 registers. Note that Register 0 and Register 1 are read only and cannot be changed.
2. Enable all subsystems. This normally includes the per PLL values found in Register 0x06 (for PLL1) and Register 0x08 (for PLL2). They are the feedback divider PU (Bit 1), VCO PU (Bit 2), and ENPFD (Bit 3), as well as the enable activity detect bit, which is a global bit (Register 0x03, Bit 28).
3. The enable XTAL1 (in Register 3) and enable XTAL2 (in Register 10) bits are normally set to 0 because the crystals are enabled as necessary. Setting these to 1 forces the corresponding input on permanently.
4. The following bits are internal resets, and cannot be OTP programmed. These bits are in three groups (global, PLL1, and PLL2) and must be 0 for normal device operation.
   The internal reset global bits are in Register 15.
   The PLL1 bits are in Register 7, Bits[11:15].
   The PLL2 bits are in Register 9, Bits[11:15].
5. For each output to be used (OUTPUT1 through OUTPUT4 and REFOUT), select the mode according to Table 16, as well as the corresponding enable bits in Register 2 and Register 3.

REGISTER MAP

The shaded cells in Table 31 indicate bit(s) that can be OTP programmed. See the OTP Programming section for more information.

Table 31.

Addr	Name	Bits	D7	D6	D5	D4	D3	D2	D1	D0	Default
Register 0											
0x00	Chip and manufacturer ID	[31:24]	Chip ID[3:0]				Unused	Manufacturer ID[10:8]			0x03
		[23:16]	Manufacturer ID[7:0]								0x10
		[15:8]	Security[15:8]								0x00
		[7:0]	Security[7:0]								0x00
Register 1											
0x01	Product ID, chip ID and user programming space	[47:40]	Product ID[7:0]								0x7A
		[39:32]	Chip ID[7:4]				Product Revision[3:0]				0x08
		[31:24]	User ID[31:24]								0x00
		[23:16]	User ID[23:16]								0x00
		[15:8]	User ID[15:8]								0x00
		[7:0]	User ID[7:0]								0x00
Register 2											
0x02	External pin readback and override	[23:16]	Unused				MR (master reset)	MR enable (set to 1 to enable MR)	REFOUT	REFOUT enable (override OEREF pin)	0x00
		[15:8]	OUTPUT4	Override OE4 pin	OUTPUT3	Override OE3 pin	OUTPUT2	Override OE2 pin	OUTPUT1	Override OE1 pin	0x00
		[7:0]	REFSEL2	REFSEL2 enable (set to 1)	REFSEL1	REFSEL1 enable (set to 1)	PLL2	PLL2 enable (set to 1)	PLL1	PLL1 enable (override $\overline{PD1}$ pin)	0x00
Register 3											
0x03	Reference buffer and divider, interpolated value increment	[31:24]	REFOUT Mode[1:0]		Unused	Enable activity detect	Reference mux select	Enable XTAL1	Unused		0x10
		[23:16]	Unused				Enable OUTPUT4 divider	Enable OUTPUT3 divider	Enable OUTPUT2 divider	Enable OUTPUT1 divider	0x0F
		[15:8]	Unused				Enable OUTPUT4 4.5 mode	Enable OUTPUT3 4.5 mode	Enable OUTPUT2 4.5 mode	Enable OUTPUT1 4.5 mode	0x00
		[7:0]	Exponent[3:0]				Mantissa[3:0]				0x00
Register 4											
0x04	XTAL1 and output buffer configuration	[15:8]	XTAL1 frequency trim	XTAL1 Capacitance Value[2:0]			Unused	XTAL1 Gain[2:0]			0x00
		[7:0]	OUTPUT4 Mode[1:0]		OUTPUT3 Mode[1:0]		OUTPUT2 Mode[1:0]		OUTPUT1 Mode[1:0]		0x00
Register 5											
0x05	Output driver configuration	[31:24]	OUTPUT4 Divider[7:0]								0x00
		[23:16]	OUTPUT3 Divider[7:0]								0x00
		[15:8]	OUTPUT2 Divider[7:0]								0x00
		[7:0]	OUTPUT1 Divider[7:0]								0x00
Register 6											
0x06	PLL1 configuration	[39:32]	PLL1 Integer Feedback Divider[7:0]								0x00
		[31:24]	PLL1 Fractional Feedback Divider[27:20]								0x00
		[23:16]	PLL1 Fractional Feedback Divider[19:12]								0x00
		[15:8]	PLL1 Fractional Feedback Divider[11:6]						PLL1 Fractional Feedback Divider[5:4]; PLL1 Modulus Value[5:4]		0x00
		[7:0]	PLL1 Fractional Feedback Divider[3:0]; PLL1 Modulus Value[3:0]				ENPFD	VCO PU	Feedback divider PU	PLL1 lock IRQ	0x0E

Addr	Name	Bits	D7	D6	D5	D4	D3	D2	D1	D0	Default
Register 7											
0x07	PLL1 configuration	[39:32]	PLL1 Dither[2:0]			Dither Scale[4:0]					0x00
		[31:24]	PLL1 MASH[2:0]			PLL1 Frequency Select[4:0]					0x00
		[23:16]	Power-on override	S[1:0]		CUR[4:0]					0x00
		[15:8]	PLL1 phase advance	Reset feedback divider	OUTPUT1_2 reset	Force reset	PLL1 phase retard	Rational mode	PLL1 Modulus Value[15:14]		0x00
		[7:0]	PLL1 Modulus Value[13:6]								0x00
Register 8											
0x08	PLL2 configuration	[39:32]	PLL2 Integer Feedback Divider[7:0]								0x00
		[31:24]	PLL2 Fractional Feedback Divider[27:20]								0x00
		[23:16]	PLL2 Fractional Feedback Divider[19:12]								0x00
		[15:8]	PLL2 Fractional Feedback Divider[11:6]						PLL2 Fractional Feedback Divider[5:4], PLL2 Modulus Value[5:4]		0x00
		[7:0]	PLL2 Fractional Feedback Divider[3:0], PLL2 Modulus Value[3:0]				ENPFD	VCO PU	Feedback divider PU	PLL2 lock IRQ (SDO changes to IRQ)	0x0E
Register 9											
0x09	PLL2 configuration	[39:32]	PLL2 Dither[2:0]			Dither Scale[4:0]					0x00
		[31:24]	PLL2 MASH[2:0]			PLL2 Frequency Select[4:0]					0x00
		[23:16]	Power-on override	S[1:0]		CUR[4:0]					0x00
		[15:8]	PLL2 phase advance	Reset feedback divider	OUTPUT3_4 reset	Force reset	PLL2 phase retard	Rational mode	PLL2 Modulus Value[15:14]		0x00
		[7:0]	PLL2 Modulus Value[13:6]								0x00
Register 10											
0x0A	XTAL2 configuration	[15:8]	XTAL2 frequency trim	XTAL2 Capacitance Value[2:0]			XTAL2 Gain[2:0]			Enable XTAL2	0x00
		[7:0]	Reserved								0x00
Register 11											
0x0B	Reserved	[31:24]	Reserved (factory configured; do not change)								Varies
		[23:16]	Reserved (factory configured; do not change)								Varies
		[15:8]	Reserved (factory configured; do not change)								Varies
		[7:0]	Reserved (factory configured; do not change)								Varies
Register 12											
0x0C	PLL1 K_{VCO} band	[31:24]	PLL1 K_{VCO} band	Reserved					Reserved (factory configured; do not change)		Varies
		[23:16]	Reserved (factory configured; do not change)								Varies
		[15:8]	Reserved (factory configured; do not change)								Varies
		[7:0]	Reserved (factory configured; do not change)								Varies
Register 13											
0x0D	Reserved	[31:24]	Reserved (factory configured; do not change)								Varies
		[23:16]	Reserved (factory configured; do not change)								Varies
		[15:8]	Reserved (factory configured; do not change)								Varies
		[7:0]	Reserved (factory configured; do not change)								Varies
Register 14											
0x0E	PLL2 K_{VCO} band	[31:24]	PLL2 K_{VCO} band	Reserved					Reserved (factory configured; do not change)		Varies
		[23:16]	Reserved (factory configured; do not change)								Varies
		[15:8]	Reserved (factory configured; do not change)								
		[7:0]	Reserved (factory configured; do not change)								
Register 15											
0x0F	PLL lock detect (read only)	[23:16]	PLL2 lock detect	Reserved	PLL1 lock detect	Reserved		Revision Subcode[1:0]		Reserved	Varies
		[15:8]	Unused								0x00
		[7:0]	Unused								0x00

REGISTER MAP BIT DESCRIPTIONS

CHIP AND MANUFACTURER ID (REGISTER 0, ADDRESS 0x00)

Table 32. Chip and Manufacturer ID

Bits	Bit Name	Description
31:28	Chip ID[3:0]	This register has no effect on device operation. The customer can use it for tracking different versions of device programming or identifying a chip on a printed circuit board. Including the four bits in Register 0x01, there are a total of eight bits for this function, and these values can be OTP programmed.
27	Unused	Default = 0b.
26:16	Manufacturer ID[10:0]	Manufacturer ID. These bits identify this chip as an Analog Devices IC and have no effect on device operation.
15:0	Security[15:0]	During the process of OTP programming, these bits control whether a given register becomes read only during future operation. There is one bit for each register. If the security bit for a given register is 1 during an OTP programming sequence, the corresponding register becomes read only, and the user can make no additional modifications to that register through the serial port.

PRODUCT ID, CHIP ID, AND USER PROGRAMING SPACE (REGISTER 1, ADDRESS 0x01)

Table 33. Product ID, Chip ID, and User Programing Space

Bits	Bit Name	Description
47:40	Product ID[7:0]	Product ID.
39:36	Chip ID[7:4]	This register has no effect on device operation. The customer can use it for tracking different versions of device programming or identifying a chip on a printed circuit board. Including the four bits in Register 0x00, there are a total of eight bits for this function, and these values can be OTP programmed.
35:32	Product Revision[3:0]	This read only register contains the AD9578 silicon revision information.
31:0	User ID[31:0]	Additional OTP programmable bits to program up to 32 bits of user assigned information.

EXTERNAL PIN READBACK AND OVERRIDE (REGISTER 2, ADDRESS 0x02)

Table 34. External Pin Readback and Override

Bits	Bit Name	Description
23:20	Unused	Default = 0x0.
19	MR (master reset)	This bit resets the chip. This bit is not self clearing. 1: the AD9578 is held in reset. MR enable (Bit 18 in this register) must be 1 for this bit to take effect. 0 (default): normal operation.
18	MR enable	This bit enables the MR (master reset) bit (Bit 19 in this register). 1: master reset is enabled. 0 (default): master reset (Bit 19 of this register) is disabled.
17	REFOUT	This bit enables/disables the REFOUT driver. If REFOUT enable (Bit 16 in this register) = 1, this bit enables the REFOUT driver, as follows: 1: the REFOUT driver is enabled. 0 (default): the REFOUT driver is disabled. If REFOUT enable (Bit 16 in this register) = 0, this is a read only register, as follows: 1: the OEREF pin is high and the REFOUT driver is enabled. 0 (default): the OEREF pin is low and the REFOUT driver is disabled.
16	REFOUT enable (override OEREF pin)	This bit enables REFOUT (Bit 17 in this register). 1: the REFOUT bit controls the on/off state of the REFOUT driver. 0 (default): the OEREF pin controls the on/off state of the REFOUT driver.

Bits	Bit Name	Description
15	OUTPUT4	This bit enables/disables the OUTPUT4 driver. Note that the user must enable PLL2 for the OUTPUT4 driver to be enabled. If override OE4 pin (Bit 14 in this register) = 1, this bit enables the OUTPUT4 driver, as follows: 1: the OUTPUT4 driver is enabled. 0 (default): the OUTPUT4 driver is disabled. If override OE4 pin (Bit 14 in this register) = 0, this is a read only register, as follows: 1: the OE4 pin is high and the OUTPUT4 driver is enabled. 0 (default): the OE4 pin is low and the OUTPUT4 driver is disabled.
14	Override OE4 pin	This bit enables the OUTPUT4 bit (Bit 15 in this register). 1: the OUTPUT4 bit controls the on/off state of the OUTPUT4 driver. 0 (default): the OE4 pin controls the on/off state of the OUTPUT4 driver.
13	OUTPUT3	This bit enables/disables the OUTPUT3 driver. Note that the user must enable PLL2 for the OUTPUT3 driver to be enabled. If override OE3 pin (Bit 12 in this register) = 1, this bit enables the OUTPUT3 driver, as follows: 1: the OUTPUT3 driver is enabled. 0 (default): the OUTPUT3 driver is disabled. If override OE3 pin (Bit 12 in this register) = 0, this is a read only register, as follows: 1: the OE3 pin is high and the OUTPUT3 driver is enabled. 0 (default): the OE3 pin is low and the OUTPUT3 driver is disabled.
12	Override OE3 pin	This bit enables the OUTPUT3 bit (Bit 13 in this register). 1: the OUTPUT3 bit controls the on/off state of the OUTPUT3 driver. 0 (default): the OE3 pin controls the on/off state of the OUTPUT3 driver.
11	OUTPUT2	This bit enables/disables the OUTPUT2 driver. Note that the user must enable PLL2 for the OUTPUT2 driver to be enabled. If override OE2 pin (Bit 10 in this register) = 1, this bit enables the OUTPUT2 driver, as follows: 1: the OUTPUT2 driver is enabled. 0 (default): the OUTPUT2 driver is disabled. If override OE2 pin (Bit 10 in this register) = 0, this is a read only register, as follows: 1: the OE2 pin is high and the OUTPUT2 driver is enabled. 0 (default): the OE2 pin is low and the OUTPUT2 driver is disabled.
10	Override OE2 pin	This bit enables the OUTPUT2 bit (Bit 11 in this register). 1: the OUTPUT2 bit controls the on/off state of the OUTPUT2 driver. 0 (default): the OE2 pin controls the on/off state of the OUTPUT2 driver.
9	OUTPUT1	This bit enables/disables the OUTPUT1 driver. Note that the user must enable PLL2 for the OUTPUT1 driver to be enabled. If override OE1 pin (Bit 8 in this register) = 1, this bit enables the OUTPUT1 driver, as follows: 1: the OUTPUT1 driver is enabled. 0 (default): the OUTPUT1 driver is disabled. If override OE1 pin (Bit 8 in this register) = 0, this is a read only register, as follows: 1: the OE1 pin is high and OUTPUT1 is enabled. 0 (default): the OE1 pin is low and the OUTPUT1 driver is disabled.
8	Override OE1 pin	This bit enables the OUTPUT1 bit (Bit 9 in this register). 1: the OUTPUT1 bit controls the on/off state of the OUTPUT1 driver. 0 (default): the OE1 pin controls the on/off state of the OUTPUT1 driver.
7	REFSEL2	This bit controls which input is used by PLL2, provided that REFSEL2 enable (Bit 6 of this register) is 1. 1: PLL2 uses Reference 2 (which corresponds to the XO3/XO4 pins). 0: (default) PLL2 uses Reference 1 (which corresponds to the XO1/XO2 pins).
6	REFSEL2 enable	This bit enables the REFSEL2 bit, and must be set to 1 for Bit 7 to function. 1: the REFSEL1 bit is enabled. 0 (default): the REFSEL1 bit is disabled. PLL2 uses Reference 1.
5	REFSEL1	This bit controls which input is used by PLL1, provided that REFSEL1 enable (Bit 4 of this register) is 1. 1: PLL1 uses Reference 2 (which corresponds to the XO3/XO4 pins). 0 (default): PLL1 uses Reference 1 (which corresponds to the XO1/XO2 pins).

Bits	Bit Name	Description
4	REFSEL1 enable	This bit enables the REFSEL1 bit, and must be set to 1 for Bit 5 to function. 1: the REFSEL1 bit is enabled. 0 (default): the REFSEL1 bit is disabled. PLL1 uses Reference 1.
3	PLL2	This bit enables/disables PLL2 when PLL2 enable (Bit 2 of this register) is 1. 1: PLL2 is enabled. 0 (default): PLL2 is disabled.
2	PLL2 enable	This bit enables the PLL2 bit, and must be set to 1 for Bit 3 to function. 1: the PLL2 bit is enabled. 0 (default): the PLL2 bit is disabled. PLL2 is powered down.
1	PLL1	This bit enables/disables PLL1. If PLL1 enable (Bit 0 in this register) = 1, this bit enables PLL1, as follows: 1: PLL1 is enabled. 0 (default): PLL1 is disabled. If PLL1 enable (Bit 0 in this register) = 0, this is a read only register, as follows: 1: the $\overline{PD1}$ pin is high and PLL1 is enabled. 0 (default): the $\overline{PD1}$ pin is low and PLL1 is disabled.
0	PLL1 enable (override $\overline{PD1}$ pin)	This bit enables the PLL1 bit (Bit 1 in this register). 1: the PLL1 bit controls the on/off state of PLL1. 0 (default): the $\overline{PD1}$ pin controls the on/off state of PLL1. In this case, the PLL1 bit is read only and its value is the same as the state of the $\overline{PD1}$ pin.

REFOUT/OUTPUT DIVIDER ENABLE (REGISTER 3, ADDRESS 0x03)

Table 35. Reference Buffer and Divider, Interpolated Value Increment

Bits	Bit Name	Description
31:30	REFOUT Mode[1:0]	These bits set the mode of the REFOUT driver. 00 (default): 3.3 V LVCMOS (normal output only; complementary output is high-Z). 01: LVDS. 10: 3.3 V LVPECL. 11: HCSL.
29	Unused	Set to 0.
28	Enable activity detect	This bit enables the activity detectors. Always set this bit to 1 for normal operation. The activity detectors determine when an active clock signal is passing through a circuit inside of the chip. 1 (default): spot activity detector enabled. 0: spot activity detector disabled. (Do not use.)
27	Reference mux select	This bit controls which input is buffered to the REFOUT driver. 1: REFOUT uses Reference 2 (which corresponds to the XO3/XO4 pins). 0: (default) REFOUT uses Reference 1 (which corresponds to the XO1/XO2 pins).
26	Enable XTAL1	Set to 0 for normal operation. This bit enables the crystal oscillator connected to the XO1 and XO2 pins when this bit is set to 1. Note that the crystal oscillator is automatically enabled when Reference Input 1 is selected. Setting this bit to 1 keeps the oscillator enabled at all times, avoiding the crystal start-up delay when switching between crystal and reference inputs.
25:20	Unused	Set to 0.
19	Enable OUTPUT4 divider	This bit enables the OUTPUT4 divider. Set this bit whenever the corresponding output buffer is enabled.
18	Enable OUTPUT3 divider	This bit enables the OUTPUT3 divider. Set this bit whenever the corresponding output buffer is enabled.
17	Enable OUTPUT2 divider	This bit enables the OUTPUT2 divider. Set this bit whenever the corresponding output buffer is enabled.

Bits	Bit Name	Description
16	Enable OUTPUT1 divider	This bit enables the OUTPUT1 divider. Set this bit whenever the corresponding output buffer is enabled.
15:12	Unused	Set to 0.
11:8	Enable OUTPUTx 4.5 mode	For the special case of frequencies between 750 MHz and 778 MHz, which cannot be accessed with divide by 4 or divide by 5, a divide by 4.5 is provided. To divide by 4.5, set the enable OUTPUTx 4.5 mode bit (where x is an integer from 1 to 4). When the OUTPUTx 4.5 mode bit is set, the associated output divider ignores the OUTPUTx Divider[7:0] value in Register 5 and divides by 4.5.
7:4	Exponent[3:0]	If a new value is presented to the fractional-N divider, the change is interpolated in steps equal in size to the value of mantissa << exponent, that is, the value of the Mantissa[3:0] bits shifted up by the exponent bits. If Mantissa[3:0] is 0, the new value takes effect immediately. Allowable values are 0d to 15d for Exponent[3:0], with 1d having the smallest step size and the most gradual change in the fractional feedback divider.
3:0	Mantissa[3:0]	If a new value is presented to the fractional-N divider, the change is interpolated in steps equal in size to the value of mantissa << exponent, that is, the value of the mantissa bits shifted up by the exponent bits. If Mantissa[3:0] is 0, the new value takes effect immediately. Allowable values are 0d to 15d for Mantissa[3:0] with 1d having the smallest step size and the most gradual change in the fractional feedback divider.

XTAL1 AND OUTPUT BUFFER CONFIGURATION (REGISTER 4, ADDRESS 0x04)

Table 36. XTAL1 and Output Buffer Configuration

<table>
<tr><th>Bits</th><th>Bit Name</th><th>Description</th></tr>
<tr><td>15</td><td>XTAL1 frequency trim</td><td>This is an additional gain trim bit for the crystal oscillator. Setting XTAL frequency trim = 1 is recommended for optimal performance with crystal frequencies ≤33 MHz. See Table 25.</td></tr>
<tr><td>14:12</td><td>XTAL1 Capacitance Value[2:0]</td><td>These register bits control the amount of internal load capacitance on the XO1 and XO2 pins. The correct setting can be determined using the following equation: $2 \times (C_{LOAD} - C_{STRAY})$ where C_{LOAD} is the specified load capacitance of the crystal used, and C_{STRAY} is the stray capacitance (usually 2 pF to 5 pF) on the circuit board.
<table>
<tr><th>XTAL1 Capacitance Value[2:0]</th><th>C_{LOAD} of Crystal (pF)</th><th>Recommended Internal Capacitance on XO1/XO2 Pins (Assuming 3 pF Stray Capacitance) (pF)</th></tr>
<tr><td>000</td><td>8</td><td>10</td></tr>
<tr><td>001</td><td>9</td><td>12</td></tr>
<tr><td>010</td><td>10</td><td>14</td></tr>
<tr><td>011</td><td>11</td><td>16</td></tr>
<tr><td>100</td><td>12</td><td>18</td></tr>
<tr><td>101</td><td>13</td><td>20</td></tr>
<tr><td>110</td><td>14</td><td>22</td></tr>
<tr><td>111</td><td>15</td><td>24</td></tr>
</table></td></tr>
<tr><td>11</td><td>Unused</td><td></td></tr>
<tr><td>10:8</td><td>XTAL1 Gain[2:0]</td><td>These are gain trim bits for the crystal oscillator. Optimal performance is achieved when the gain is programmed according to the ESR of the crystal. See Table 25.</td></tr>
<tr><td>7:6</td><td>OUTPUT4 Mode[1:0]</td><td>These bits set the mode of OUTPUT4.
00 (default): 3.3 V LVCMOS (normal output only; complementary output is high-Z).
01: LVDS.
10: 3.3 V LVPECL.
11: HCSL.</td></tr>
<tr><td>5:4</td><td>OUTPUT3 Mode[1:0]</td><td>These bits set the mode of OUTPUT3.
00 (default): 3.3 V LVCMOS (normal output only; complementary output is high-Z).
01: LVDS.
10: 3.3 V LVPECL.
11: HCSL.</td></tr>
<tr><td>3:2</td><td>OUTPUT2 Mode[1:0]</td><td>These bits set the mode of OUTPUT2.
00 (default): 3.3 V LVCMOS (normal output only; complementary output is high-Z).
01: LVDS.
10: 3.3 V LVPECL.
11: HCSL.</td></tr>
</table>

Bits	Bit Name	Description
1:0	OUTPUT1 Mode[1:0]	These bits set the mode of OUTPUT1. 00 (default): 3.3 V LVCMOS (normal output only; complementary output is high-Z). 01: LVDS. 10: 3.3 V LVPECL. 11: HCSL.

OUTPUT DRIVER CONFIGURATION (REGISTER 5, ADDRESS 0x05)

Table 37. Output Driver Configuration

Bits	Bit Name	Description
31:24	OUTPUT4 Divider[7:0]	The value of the OUTPUT4 divider. As an 8-bit decimal value, n, the VCO frequency is divided by n, where n = 4 to 255, and divided by 256 + n, where n = 0 to 3.
23:16	OUTPUT3 Divider[7:0]	The value of the OUTPUT3 divider. As an 8-bit decimal value, n, the VCO frequency is divided by n, where n = 4 to 255, and divided by 256 + n, where n = 0 to 3.
15:8	OUTPUT2 Divider[7:0]	The value of the OUTPUT2 divider. As an 8-bit decimal value, n, the VCO frequency is divided by n, where n = 4 to 255, and divided by 256 + n, where n = 0 to 3.
7:0	OUTPUT1 Divider[7:0]	The value of the OUTPUT1 divider. As an 8-bit decimal value, n, the VCO frequency is divided by n, where n = 4 to 255, and divided by 256 + n, where n = 0 to 3.

PLL1 CONFIGURATION (REGISTER 6, ADDRESS 0x06)

Table 38. PLL1 Configuration

Bits	Bit Name	Description
39:32	PLL1 Integer Feedback Divider[7:0]	PLL1 integer feedback divider. This is a fixed point value that contains the integer portion of the feedback divider. The smallest allowable value of the PLL1 feedback divider is 23.
31:10	PLL1 Fractional Feedback Divider[27:6]	PLL1 fractional feedback divider, Bits[27:6]. If PLL1 is in fractional mode, all 28 bits in the PLL1 fractional feedback divider are used. If PLL1 is in integer mode, the first three bits in this register can be used either for phase interpolation or for MASH modulation, according to the value of S[1:0]. In fractional mode, at full phase interpolation, the fractional portion of the PLL1 feedback divider is 28 bits, for a resolution of $1/(2^{28})$, or 3.7×10^{-9}, or approximately 4 ppb.
9:4	PLL1 Fractional Feedback Divider[5:0], PLL1 Modulus Value[5:0]	In fractional mode, this register contains Bits[5:0] of the PLL1 fractional feedback divider. In rational mode, this register contains Bits[5:0] of the PLL1 modulus value. This register is not used in integer mode; do not set the bits in this register to 0 in integer mode.
3	ENPFD	This bit controls the power supplies to the charge pump and phase frequency detector. Keep this bit set to 1, the default setting. These subsystems are automatically disabled whenever the corresponding PLL is powered down via the $\overline{PD1}$ pin.
2	VCO PU	This bit controls the power supplies to the VCO. Keep this bit set to 1, the default setting. This subsystem is automatically disabled whenever the corresponding PLL is powered down via the $\overline{PD1}$ pin.
1	Feedback divider PU	This bit controls the power supplies to the feedback divider. Keep this bit set to 1, the default setting. This subsystem is automatically disabled whenever the corresponding PLL is powered down via the $\overline{PD1}$ pin.
0	PLL1 lock IRQ	This bit sets the function of the SDO/LOL pin. 0 (default): the SDO/LOL pin function is serial data output (SDO). 1: the SDO/LOL pin function is IRQ, which is used as a loss of lock (LOL) indicator.

PLL1 CONFIGURATION (REGISTER 7, ADDRESS 0x07)

Table 39. PLL1 Configuration

Bits	Bit Name	Description
39:37	PLL1 Dither[2:0]	Order of dither generation. When PLL1 Dither[2:0] is 0, there is no dithering. All nonzero values create dither of the value stored in PLL1 Dither[2:0]. Dither is a noise shaped random value that is added to the divider fractional value at each calculation of the modulation, which helps to disperse harmonic spurs resulting from short modulation sequences. The time average value of dither is always zero, so that the use of dither does not change the divider value. The use of dither is highly dependent upon the choice of value for Dither Scale[4:0]. For normal operation, always set PLL1 Dither[2:0] to zero when PLL1 MASH[2:0] is zero. The largest usable value of PLL1 Dither[2:0] is 5. Typically, the value of PLL1 Dither[2:0] is set equal to the value of PLL1 MASH[2:0].
36:32	Dither Scale[4:0]	Dither scale. The dither scale, in bits. The dither value is a signed value of one to five bits in length, depending on the value chosen for PLL1 Dither[2:0]. To be effective, this value must be scaled up until the amount of dither is equal to 1/2 LSB of the divider value. The proper dither scale value for the dither is therefore equal to the number of zeros following the last bit set to 1 in the feedback divider value. Because the dither is a signed value, Dither Scale[4:0] must always be larger than the PLL1 Dither[2:0] setting.
31:29	PLL1 MASH[2:0]	The order of MASH modulation. When PLL1 MASH[2:0] = 0, there is no modulation. Any fractional value given to the feedback divider that is at a finer resolution than the phase interpolation, S[1:0], results in an inaccurate output frequency. For all nonzero values of PLL1 MASH[2:0], modulation is used unless the feedback divider does not require modulation to be represented exactly (for example, if the feedback divider is an integer number). Modulation means that the feedback divider alternates between floor(PLL1 Fractional Feedback Divider[27:0]) and ceiling(PLL1 Fractional Feedback Divider[27:0]) according to a pattern whose time averaged value is PLL1 Fractional Feedback Divider[27:0]. When PLL1 MASH[2:0] = 1, first-order modulation is used. First-order modulation typically has large noise spurs due to the short length of the modulation patterns. Noise decreases as a function of PLL1 MASH[2:0], although for values of PLL1 MASH[2:0] greater than 2, this effect may not be measurable. The largest usable value of PLL1 MASH[2:0] is 4.
28:24	PLL1 Frequency Select[4:0]	This 5-bit value sets the frequency range of the VCO. Smaller values correspond to higher frequency. The evaluation software sets the optimal value; therefore, the user does not normally need to change this register. Table 27 contains the frequency ranges for each register setting. Note that the PLL1 KVCO band bit in Register 0x0C must be set to 1 for Frequency Select[4:0] = 14 through 27 (decimal).
23	Power-on override	When set to 1, this bit, one for each PLL, disables the simultaneous synchronization pulses sent to PLL1 and PLL2 during the power-up cycle. Otherwise, both PLL outputs are synchronized at startup.
22:21	S[1:0]	The order of phase interpolation. When S[1:0] = 0, a fractional divider is interpolated among eight phases; therefore, values down to 1/8 can be represented exactly, without modulation. When S[1:0] = 1, the value is interpolated among four phases. When S[1:0] = 2, the value is interpolated between two phases, and when S[1:0] = 3, there is no phase interpolation. For example, the feedback divider of 64.5 can be represented either by PLL1 MASH[2:0] = 0, S[1:0] = 2; or by PLL1 MASH[2:0] = 1, S[1:0] = 3. In both cases, the output frequency is the same. However, the phase noise characteristics of the two representations differ. The use of phase interpolation allows up to three bits greater precision in the feedback divider. A consequence of reducing the phase interpolation is the loss of bits at the end of PLL1 Fractional Feedback Divider[27:0]. For example, when S[1:0] = 2, the last bit of PLL1 Fractional Feedback Divider[27:0] is ignored.
20:16	CUR[4:0]	Each PLL has a current trim for the charge pump, with the current given by the equation (3.125 × (1 + CUR)) µA, for a minimum current of 3.125 µA at CUR[4:0] = 0, and a maximum current of 100 µA at CUR[4:0] = 31.
15	PLL1 phase advance	This bit, one for each PLL, is an active control that shifts the output of the VCO forward one of eight phases (1/8 cycle). This phase shift happens regardless of the S[1:0] setting for the PLL. The phase advance is edge triggered; therefore, no further phase advancement occurs until this bit is set back to 0 and raised again. This feature can be used to precisely align the phases of the two PLLs.
14	Reset feedback divider	This bit resets the feedback divider. Set and clear this bit if the order of the MASH is changed or if the feedback divider in Register 6 is changed.
13	OUTPUT1_2 reset	This bit resets the OUTPUT1 and OUTPUT2 output driver. This bit is normally set to 0, although it can be set and cleared to reset the OUTPUT1 and OUTPUT2 output drivers.
12	Force reset	This active signal forces a reset cycle that generates synchronization pulses for the outputs of each PLL.
11	PLL1 phase retard	This bit is similar to the advance bit but shifts the output of the VCO backward one of eight phases.
10	Rational mode	This bit sets the rational mode, the use of which is described in detail in the PLLs section. In rational mode, the feedback divider fractional part is a ratio of integers, with the numerator encoded in PLL1 Fractional Feedback Divider[24:9] in Register 6and the denominator encoded in PLL1 Modulus Value[15:6] of this register.

Bits	Bit Name	Description
9:0	PLL1 Modulus Value[15:6]	The first 10 bits of the 16-bit modulus value. When the 16-bit binary value is 0, the PLL1 Fractional Feedback Divider[27:0] value is interpreted as a 28-bit fixed point value. When PLL1 Modulus Value[15:0] is nonzero, and the rational mode bit is set, the feedback divider ratio is calculated by a complicated expression (see Table 26). In the simplest case, S[1:0] is set to 3 (no phase interpolation), and the feedback divider expression is PLL1 Fractional Feedback Divider[24:9] + (PLL1 Feedback Divider[24:9]/modulus), generating a feedback divider that is an exact ratio of integers. Note that having a numerator that is larger than the denominator is an invalid configuration. Also, note that the lower six bits of the modulus value are shared with the lowest six bits of PLL1 Feedback Divider[27:0], which are not otherwise used in rational mode.

PLL2 CONFIGURATION (REGISTER 8, ADDRESS 0x08)

Table 40. PLL2 Configuration

Bits	Bit Name	Description
39:32	PLL2 Integer Feedback Divider[7:0]	PLL2 integer feedback divider. This is a fixed point value that contains the integer portion of the feedback divider. The smallest allowable value of the PLL1 feedback divider is 23.
31:10	PLL2 Fractional Feedback Divider[27:6]	PLL2 fractional feedback divider, Bits[27:6]. If PLL2 is in fractional mode, all 28 bits in the PLL2 fractional feedback divider are used. If PLL1 is in integer mode, the first three bits in this register can be used either for phase interpolation or for MASH modulation, according to the value of S[1:0]. In fractional mode at full phase interpolation, the fractional part of the PLL1 feedback divider is 28 bits, for a resolution of $1/(2^{28})$, or 3.7×10^{-9}, or approximately 4 ppb.
9:4	PLL2 Fractional Feedback Divider[5:0], PLL2 Modulus Value[5:0]	In fractional mode, this register contains Bits[5:0] of the PLL2 fractional feedback divider. In rational mode, this register contains Bits[5:0] of the PLL2 modulus value. This register is not used in integer mode; do not set the bits in this register to 0 in integer mode.
3	ENPFD	This bit controls the power supplies to the charge pump and phase frequency detector. Keep this bit set to 1, the default setting. These subsystems are automatically disabled whenever the corresponding PLL is powered down via the $\overline{PD1}$ pin.
2	VCO PU	This bit controls the power supplies to the VCO. Keep this bit set to 1, the default setting. This subsystem is automatically disabled whenever the corresponding PLL is powered down via the $\overline{PD1}$ pin.
1	Feedback divider PU	This bit controls the power supplies to the feedback divider. Keep this bit set to 1, the default setting. This subsystem is automatically disabled whenever the corresponding PLL is powered down via the $\overline{PD1}$ pin.
0	PLL2 lock IRQ (SDO changes to IRQ)	This bit sets the function of the SDO/LOL pin. 0 (default): the SDO/LOL pin function is serial data output (SDO). 1: the SDO/LOL pin function is IRQ, which is used as a loss of lock (LOL) indicator.

PLL2 CONFIGURATION (REGISTER 9, ADDRESS 0x09)

Table 41. PLL2 Configuration

Bits	Bit Name	Description
39:37	PLL2 Dither[2:0]	Order of dither generation. When PLL2 Dither[2:0] is 0, there is no dithering. All nonzero values create dither of the value stored in PLL2 Dither[2:0]. Dither is a noise shaped random value that is added to the divider fractional value at each calculation of the modulation, which helps to disperse harmonic spurs resulting from short modulation sequences. The time average value of dither is always zero, so that the use of dither does not change the divider value. The use of dither is highly dependent upon the choice of value for Dither Scale[4:0]. For normal operation, always set PLL2 Dither[2:0] to zero when PLL2 MASH[2:0] is zero. The largest usable value of PLL2 Dither[2:0] is 5. Typically, the value of PLL2 Dither[2:0] is set equal to the value of PLL2 MASH[2:0].
36:32	Dither Scale[4:0]	Dither scale. The dither scale, in bits. The dither value is a signed value of one to five bits in length, depending on the value chosen for PLL2 Dither[2:0]. To be effective, this value must be scaled up until the amount of dither is equal to 1/2 LSB of the divider value. The proper dither scale value for the dither is therefore equal to the number of zeros following the last bit set to 1 in the feedback divider value. Because the dither is a signed value, Dither Scale[4:0] must always be larger than the PLL2 Dither[2:0] setting.

Bits	Bit Name	Description
31:29	PLL2 MASH[2:0]	The order of MASH modulation. When PLL2 MASH[2:0] = 0, there is no modulation. Any fractional value given to the feedback divider that is at a finer resolution than the phase interpolation, S[1:0], results in an inaccurate output frequency. For all nonzero values of PLL2 MASH[2:0], modulation is used unless the feedback divider does not require modulation to be represented exactly (for example, if the feedback divider is an integer number). Modulation means that the feedback divider alternates between floor(PLL2 Fractional Feedback Divider[27:0]) and ceiling(PLL2 Fractional Feedback Divider[27:0]) according to a pattern whose time averaged value is PLL2 Fractional Feedback Divider[27:0]. When PLL2 MASH[2:0] = 1, first-order modulation is used. First-order modulation typically has large noise spurs due to the short length of the modulation patterns. Noise decreases as a function of PLL2 MASH[2:0], although for values of PLL2 MASH[2:0] greater than 2, this effect may not be measurable. The largest usable value of PLL2 MASH[2:0] is 4.
28:24	PLL2 Frequency Select[4:0]	This 5-bit value sets the frequency range of the VCO. Smaller values correspond to higher frequency. The evaluation software sets the optimal value; therefore, the user does not normally need to change this register. Table 27 contains the frequency ranges for each register setting. Note that the PLL2 K_{VCO} band bit in Register 0x0E must be set to 1 for PPL2 Frequency Select[4:0] = 14 through 27 (decimal).
23	Power-on override	When set to 1, this bit, one for each PLL, disables the simultaneous synchronization pulses sent to PLL1 and PLL2 during the power-up cycle. Otherwise, both PLL outputs are synchronized at startup.
22:21	S[1:0]	The order of phase interpolation. When S[1:0] = 0, a fractional divider is interpolated among eight phases; therefore, values down to 1/8 can be represented exactly, without modulation. When S[1:0] = 1, the value is interpolated among four phases. When S[1:0] = 2, the value is interpolated between two phases, and when S[1:0] = 3, there is no phase interpolation. For example, the feedback divider of 64.5 can be represented either by PLL2 MASH[2:0] = 0, S[1:0] = 2; or by PLL2 MASH[2:0] = 1, S[1:0] = 3. In both cases, the output frequency is the same. However, the phase noise characteristics of the two representations differ. The use of phase interpolation allows up to three bits greater precision in the feedback divider. A consequence of reducing the phase interpolation is the loss of bits at the end of PLL2 Fractional Feedback Divider[27:0]. For example, when S[1:0] = 2, the last bit of PLL2 Fractional Feedback Divider[27:0] is ignored.
20:16	CUR[4:0]	Each PLL has a current trim for the charge pump, with the current given by the equation (3.125 × (1 + CUR)) µA, for a minimum current of 3.125 µA at CUR[4:0] = 0, and a maximum current of 100 µA at CUR[4:0] = 31.
15	PLL2 phase advance	This bit, one for each PLL, is an active control that shifts the output of the VCO forward one of eight phases (1/8 cycle). This phase shift happens regardless of the S[1:0] setting for the PLL. The phase advance is edge triggered; therefore, no further phase advancement occurs until this bit is set back to 0 and raised again. This feature can be used to precisely align the phases of the two PLLs.
14	Reset feedback divider	This bit resets the feedback divider. Set and clear this bit if the order of the MASH is changed or if the feedback divider in Register 8 is changed.
13	OUTPUT3_4 reset	This bit resets the OUTPUT3 and OUTPUT4 output driver. This bit is normally set to 0, although it can be set and cleared to reset the OUTPUT3 and OUTPUT4 output drivers.
12	Force reset	This active signal forces a reset cycle that generates synchronization pulses for the outputs of each PLL.
11	PLL2 phase retard	This bit is similar to the advance bit but shifts the output of the VCO backward one of eight phases.
10	Rational mode	This bit sets the rational mode, the use of which is described in detail in the PLLs section. In rational mode, the feedback divider fractional part is a ratio of integers, with the numerator encoded in PLL2 Fractional Feedback Divider[24:9] in Register 8and the denominator encoded in PLL2 Modulus Value[15:6] of this register.
9:0	PLL2 Modulus Value[15:6]	The first 10 bits of the 16-bit modulus value. When the 16-bit binary value is 0, the PLL1 Fractional Feedback Divider[27:0] value is interpreted as a 28-bit fixed point value. When PLL1 Modulus Value[15:0] is nonzero, and the rational mode bit is set, the feedback divider ratio is calculated by a complicated expression (see Table 26). In the simplest case, S[1:0] is set to 3 (no phase interpolation), and the feedback divider expression is PLL1 Fractional Feedback Divider[24:9] + (PLL1 Feedback Divider[24:9]/modulus), generating a feedback divider that is an exact ratio of integers. Note that having a numerator that is larger than the denominator is an invalid configuration. Also, note that the lower six bits of the modulus value are shared with the lowest six bits of PLL1 Feedback Divider[27:0], which are not otherwise used in rational mode.

XTAL2 CONFIGURATION (REGISTER 10, ADDRESS 0x0A)

Table 42. XTAL2 Configuration

Bits	Bit Name	Description		
15	XTAL2 frequency trim	This is an additional gain trim bit for the second crystal oscillator. XTAL2 frequency trim = 1 is recommended for optimal performance with crystal frequencies ≤33 MHz. See Table 25.		
14:12	XTAL1 Capacitance Value[2:0]	These register bits control the amount of internal load capacitance on the XO3 and XO4 pins. The correct setting can be determined using the following equation: $2 \times (C_{LOAD} - C_{STRAY})$ where C_{LOAD} is the specified load capacitance of the crystal used, and C_{STRAY} is the stray capacitance (usually 2 pF to 5 pF) on the circuit board.		
		XTAL2 Capacitance Value[2:0]	**C_{LOAD} of Crystal (pF)**	**Recommended Internal Capacitance on XO3/XO4 Pins (Assuming 3 pF Stray Capacitance) (pF)**
		000	8	10
		001	9	12
		010	10	14
		011	11	16
		100	12	18
		101	13	20
		110	14	22
		111	15	24
14:12	XTAL2 Capacitance Value[2:0]	These register bits are identical to the ones in Register 3, except that they apply to XTAL2, which is connected to the XO3 and XO4 pins.		
11:9	XTAL2 Gain[2:0]	These are gain trim bits for the second crystal oscillator. Optimal performance is achieved when the gain is programmed according to the ESR of the crystal. See Table 25.		
8	Enable XTAL2	Setting the enable XTAL2 bit and the REFSELx bit allows the second crystal oscillator to be used as the PLLx reference.		
7:0	Reserved	Reserved. Set to 0.		

RESERVED (REGISTER 11, ADDRESS 0x0B)

Table 43. Reserved

Bits	Bit Name	Description
31:0	Reserved	Factory configured; do not change.

PLL1 K_{VCO} BAND (REGISTER 12, ADDRESS 0x0C)

Table 44. PLL1 K_{VCO} Band

Bits	Bit Name	Description
31	PLL1 K_{VCO} band	K_{VCO} band for PLL1. When changing the PLL1 K_{VCO} band bit, it is best to first read the entire register and then write the same values for other bits in this register. 0 (default): set to 0 if PLL1 Frequency Select[4:0] (Register 7, Bits[28:24]) is between 0 and 13. 1: set to 1 if PLL1 Frequency Select[4:0] (Register 7, Bits[28:24]) is between 14 and 27.
30:0	Reserved	Factory configured; do not change. Default: varies.

RESERVED (REGISTER 13, ADDRESS 0x0D)

Table 45. Reserved

Bits	Bit Name	Description
31:0	Reserved	Factory configured; do not change.

PLL2 K_{VCO} BAND (REGISTER 14, ADDRESS 0x0E)

Table 46. PLL2 K_{VCO} Band

Bits	Bit Name	Description
31	PLL2 K_{VCO} band	K_{VCO} band for PLL2. When changing the PLL2 K_{VCO} band bit, it is best to first read the entire register and then write the same values for other bits in this register. 0 (default): set to 0 if PLL2 Frequency Select[4:0] (Register 9, Bits[28:24]) is between 0 and 13. 1: set to 1 if PLL2 Frequency Select[4:0] (Register 9, Bits[28:24]) is between 14 and 27.
30:0	Reserved	Factory configured; do not change. Default: varies.

PLL LOCK DETECT (REGISTER 15, ADDRESS 0x0F)

Table 47. PLL Lock Detect (Read Only)

Bits	Bit Name	Description
23	PLL2 lock detect	PLL2 lock detect. 0: PLL2 is not locked, possibly indicating the absence of an input reference, or that the PLL is misconfigured. 1: PLL2 is locked.
22	Reserved	
21	PLL1 lock detect	PLL1 lock detect. 0: PLL1 is not locked, possibly indicating the absence of an input reference, or that the PLL is misconfigured. 1: PLL1 is locked.
20:19	Reserved	Set to 00b.
18:17	Revision Subcode[1:0]	This 2-bit value gives the mask variant of the AD9578. Default: 01b
6	Reserved	Default: 0x00
15:0	Unused	Set to 0.

OUTLINE DIMENSIONS

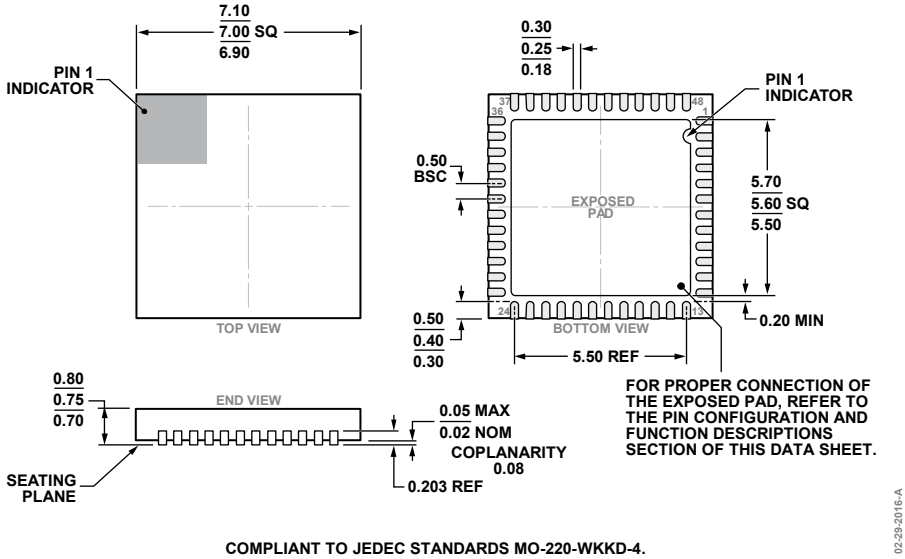

Figure 36. 48-Lead Lead Frame Chip Scale Package [LFCSP_VQ]
7 mm × 7 mm Body, Very Very Thin Quad
(CP-48-13)
Dimensions shown in millimeters

ORDERING GUIDE

Model[1]	Temperature Range	Package Description	Package Option
AD9578BCPZ	−25°C to +85°C	48-Lead LFCSP_VQ Tube	CP-48-13
AD9578BCPZ-REEL7	−25°C to +85°C	48-Lead LFCSP_VQ Tape and Reel	CP-48-13
AD9578/PCBZ	−25°C to +85°C	Evaluation Board	CP-48-13

[1] Z = RoHS Compliant Part.

©2014–2017 Analog Devices, Inc. All rights reserved. Trademarks and registered trademarks are the property of their respective owners.
D11356-0-1/17(B)

OCEAN CHIPS
Океан Электроники
Поставка электронных компонентов

Компания «Океан Электроники» предлагает заключение долгосрочных отношений при поставках импортных электронных компонентов на взаимовыгодных условиях!

Наши преимущества:

- Поставка оригинальных импортных электронных компонентов напрямую с производств Америки, Европы и Азии, а так же с крупнейших складов мира;
- Широкая линейка поставок активных и пассивных импортных электронных компонентов (более 30 млн. наименований);
- Поставка сложных, дефицитных, либо снятых с производства позиций;
- Оперативные сроки поставки под заказ (от 5 рабочих дней);
- Экспресс доставка в любую точку России;
- Помощь Конструкторского Отдела и консультации квалифицированных инженеров;
- Техническая поддержка проекта, помощь в подборе аналогов, поставка прототипов;
- Поставка электронных компонентов под контролем ВП;
- Система менеджмента качества сертифицирована по Международному стандарту ISO 9001;
- При необходимости вся продукция военного и аэрокосмического назначения проходит испытания и сертификацию в лаборатории (по согласованию с заказчиком);
- Поставка специализированных компонентов военного и аэрокосмического уровня качества (Xilinx, Altera, Analog Devices, Intersil, Interpoint, Microsemi, Actel, Aeroflex, Peregrine, VPT, Syfer, Eurofarad, Texas Instruments, MS Kennedy, Miteq, Cobham, E2V, MA-COM, Hittite, Mini-Circuits, General Dynamics и др.);

Компания «Океан Электроники» является официальным дистрибьютором и эксклюзивным представителем в России одного из крупнейших производителей разъемов военного и аэрокосмического назначения «**JONHON**», а так же официальным дистрибьютором и эксклюзивным представителем в России производителя высокотехнологичных и надежных решений для передачи СВЧ сигналов «**FORSTAR**».

AVIC JONHON

«JONHON» (основан в 1970 г.)

Разъемы специального, военного и аэрокосмического назначения:

(Применяются в военной, авиационной, аэрокосмической, морской, железнодорожной, горно- и нефтедобывающей отраслях промышленности)

«FORSTAR» (основан в 1998 г.)

ВЧ соединители, коаксиальные кабели, кабельные сборки и микроволновые компоненты:

(Применяются в телекоммуникациях гражданского и специального назначения, в средствах связи, РЛС, а так же военной, авиационной и аэрокосмической отраслях промышленности).

FORSTAR®

Телефон: 8 (812) 309-75-97 (многоканальный)
Факс: 8 (812) 320-03-32
Электронная почта: ocean@oceanchips.ru
Web: http://oceanchips.ru/
Адрес: 198099, г. Санкт-Петербург, ул. Калинина, д. 2, корп. 4, лит. А