| ITEM | Q'TY | PART NUMBER | PART DESCRIPTION |
|---|---|---|---|
| 1 | 1 | 3XX-F | T-1 (3mm) Flanged LED, See Pages 2 to 4 |
| 2 | 1 | ELM 2-XXX | Extruded, Self-Retaining LED Spacer |

| REV. | DESCRIPTION | DATE | APPROVED |
|---|---|---|---|
| A | Engineering Update w/o Changes | 03/05/04 | M. C. |
| B | Update LED, EMN-ELMXXXX3XX | 08/22/06 | M. C. |
| C | Removed Tolerance Note. | 09/03/08 | M. C. |
| D | LED Specs and Dimensions Update. | 07/22/10 | T. Y. |
| E | Added Tape & Reel Options. | 06/06/11 | T. Y. |
| F | Tape & Reel Design Update. | 11/21/11 | T. Y. |
| G | LED Offering List Update | 07/27/12 | T. Y. |
| H | Corrected LED Typo | 08/09/13 | T. Y. |
| J | Corrected P/N Typo in BOM | 09/19/13 | T. Y. |

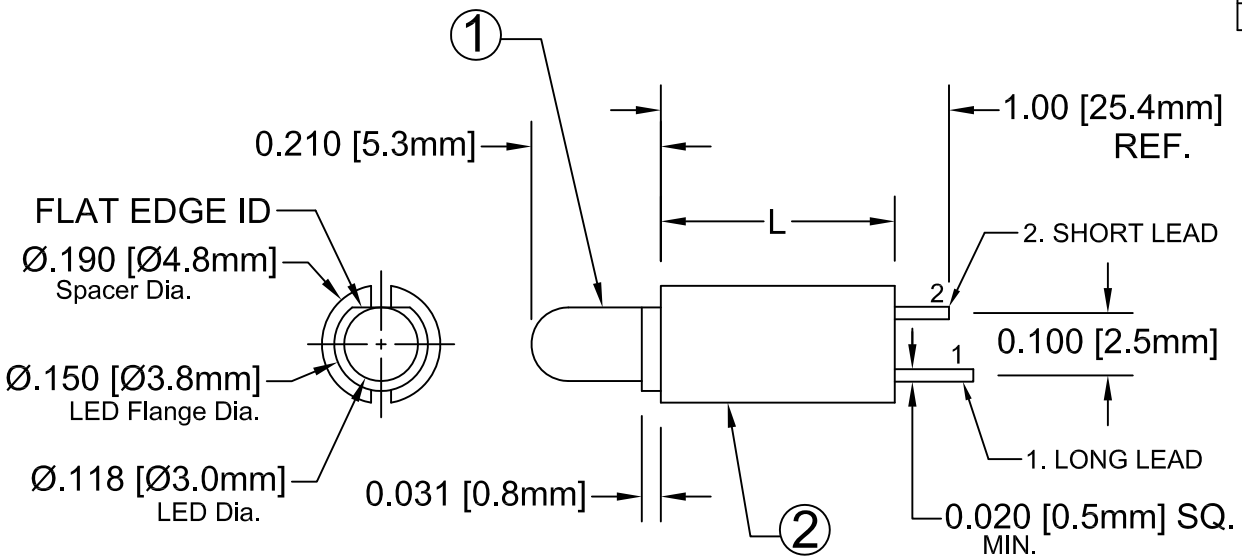


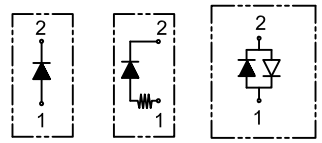


Single Color | 5V or 12V | Bi-Color

| BI-COLOR POLARITY | | |
|---|---|---|
| LED P/N | (1) Cathode | (2) Cathode |
| 3BC-F | Green | Red |
| 3BC-Y/G-F | Green | Yellow |
| 3BC-R/Y-F | Yellow | Red |
| 3BC-A/G-F | Green | Amber |

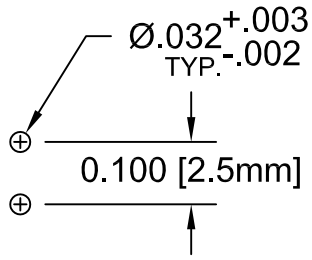


Recommended Mounting Holes

## ABSOLUTE MAXIMUM RATINGS (Ta=25°C)

| | |
|---|---|
| REVERSE VOLTAGE | 5V |
| REVERSE CURRENT | 100uA |
| OPERATING TEMPERATURE RANGE | −25° C – 85° C |
| STORAGE TEMPERATURE | −30° C – 100° C |
| LEAD SOLDERING TEMPERATURE(1/16" FROM BODY) | 260° C FOR 5 SECONDS |

STANDARD TOLERANCE
( UNLESS OTHERWISE SPECIFIED )

| DECIMALS | | ANGULAR | |
|---|---|---|---|
| .X | ± .1 | X° | ± 1° |
| .XX | ± .02 | | |
| .XXX | ± .010 | | |


BIVAR®
4 THOMAS, IRVINE, CA. 92618
TEL: (949) 951-8808 FAX: (949) 951-3974


TITLE: EXTRUDED VERTICAL T-1 (3mm) LED STANDARD PROFILE SPACER ASSY

| DESIGNED: | DATE: | PART NO: | REVISION: |
|---|---|---|---|
| MInh Doan | 07/27/12 | ELM2XXX3XX | J |
| CHECKED: T. Yin | DATE: 07/27/12 | CAGE CODE : 32559 | SHEET # 1 OF 5 |

CAD GENERATED DOCUMENT, DO NOT MEASURE DRAWING.

| REV. | DESCRIPTION | DATE | APPROVED |
|---|---|---|---|
| | SEE SHEET#1. | | |
| | | | |

| LED Assy. No. | Chip | | | Lens Appearance | Electro-Optical Data @ 20mA | | | | Viewing Angle 2 θ ½ (Deg) | LED P/N |
|---|---|---|---|---|---|---|---|---|---|---|
| | Material | Peak Wave Length | Emitted Color | | If (mA) | Vf (V) | | Iv (mcd) | | |
| | | | | | MAX | TYP | MAX | TYP | | |
| ELM2XXX3BWC | GaN/SiC | 430 | BLUE | WATER CLEAR | 25 | 4 | 4.5 | 15 | 20 | 3BWC-F |
| ELM2XXX3BWD | GaN/SiC | 430 | BLUE | DIFFUSED | 25 | 4 | 4.5 | 10 | 35 | 3BWD-F |
| ELM2XXX3BWT | GaN/SiC | 430 | BLUE | TINTED | 25 | 4 | 4.5 | 15 | 20 | 3BWT-F |
| ELM2XXX3GC | GaP/GaP | 568 | GREEN | WATER CLEAR | 30 | 2.1 | 2.8 | 40 | 20 | 3GC-F |
| ELM2XXX3GD | GaP/GaP | 568 | GREEN | DIFFUSED | 30 | 2.1 | 2.8 | 25 | 35 | 3GD-F |
| ELM2XXX3GT | GaP/GaP | 568 | GREEN | TINTED | 30 | 2.1 | 2.8 | 40 | 20 | 3GT-F |
| ELM2XXX3PGC | GaP/GaP | 555 | PURE GREEN | WATER CLEAR | 30 | 2.2 | 2.8 | 10 | 20 | 3PGC-F |
| ELM2XXX3PGD | GaP/GaP | 555 | PURE GREEN | DIFFUSED | 30 | 2.2 | 2.8 | 5 | 35 | 3PGD-F |
| ELM2XXX3PGT | GaP/GaP | 555 | PURE GREEN | TINTED | 30 | 2.2 | 2.8 | 10 | 20 | 3PGT-F |
| ELM2XXX3YC | GaAsP/GaP | 590 | YELLOW | WATER CLEAR | 30 | 2 | 2.8 | 40 | 20 | 3YC-F |
| ELM2XXX3YD | GaAsP/GaP | 590 | YELLOW | DIFFUSED | 30 | 2 | 2.8 | 20 | 35 | 3YD-F |
| ELM2XXX3YT | GaAsP/GaP | 590 | YELLOW | TINTED | 30 | 2 | 2.8 | 40 | 20 | 3YT-F |
| ELM2XXX3AC | GaAsP/GaP | 605 | AMBER | WATER CLEAR | 30 | 2 | 2.8 | 40 | 20 | 3AC-F |
| ELM2XXX3AD | GaAsP/GaP | 605 | AMBER | DIFFUSED | 30 | 2 | 2.8 | 25 | 35 | 3AD-F |
| ELM2XXX3AT | GaAsP/GaP | 605 | AMBER | TINTED | 30 | 2 | 2.8 | 40 | 20 | 3AT-F |
| ELM2XXX3HC | GaAsP/GaP | 625 | HE RED | WATER CLEAR | 30 | 2 | 2.8 | 50 | 20 | 3HC-F |
| ELM2XXX3HD | GaAsP/GaP | 625 | HE RED | DIFFUSED | 30 | 2 | 2.8 | 30 | 35 | 3HD-F |
| ELM2XXX3HT | GaAsP/GaP | 625 | HE RED | TINTED | 30 | 2 | 2.8 | 50 | 20 | 3HT-F |
| ELM2XXX3RC | GaP/GaP | 700 | RED | WATER CLEAR | 20 | 2.1 | 2.8 | 2.5 | 35 | 3RC-F |
| ELM2XXX3RD | GaP/GaP | 700 | RED | DIFFUSED | 20 | 2.1 | 2.8 | 2 | 20 | 3RD-F |
| ELM2XXX3RT | GaP/GaP | 700 | RED | TINTED | 20 | 2.1 | 2.8 | 2.5 | 20 | 3RT-F |
| ELM2XXX3BC-A/G | GaAsP/GaP | 605 | AMBER | DIFFUSED | 30 | 2.0 | 2.8 | 6 | 45 | 3BC-A/G-F |
| | GaP/GaP | 568 | GREEN | | 30 | 2.1 | 2.8 | 6 | | |
| ELM2XXX3BC | GaAsP/GaP | 625 | RED | DIFFUSED | 30 | 2.0 | 2.8 | 6 | 45 | 3BC-F |
| | GaP/GaP | 568 | GREEN | | 30 | 2.1 | 2.8 | 6 | | |
| ELM2XXX3BC-R/Y | GaAsP/GaP | 625 | RED | DIFFUSED | 30 | 2.0 | 2.8 | 6 | 45 | 3BC-R/Y-F |
| | GaAsP/GaP | 590 | YELLOW | | 30 | 2.0 | 2.8 | 4 | | |
| ELM2XXX3BC-Y/G | GaAsP/GaP | 590 | YELLOW | DIFFUSED | 30 | 2.0 | 2.8 | 4 | 45 | 3BC-Y/G-F |
| | GaP/GaP | 568 | GREEN | | 30 | 2.1 | 2.8 | 6 | | |

STANDARD TOLERANCE
( UNLESS OTHERWISE SPECIFIED )
±10% ALL VALUES ANGULAR
X° ± 5°

BIVAR®
4 THOMAS, IRVINE, CA. 92618
TEL: (949) 951-8808 FAX: (949) 951-3974

TITLE: EXTRUDED VERTICAL T-1 (3mm) LED STANDARD PROFILE SPACER ASSY

| DESIGNED: | DATE: | PART NO: | REVISION: |
|---|---|---|---|
| Minh Doan | 07/27/12 | ELM2XXX3XX | J |
| CHECKED: T. Yin | DATE: 07/27/12 | CAGE CODE : 32559 | SHEET # 2 OF 5 |

CAD GENERATED DOCUMENT, DO NOT MEASURE DRAWING.

| REV. | DESCRIPTION | DATE | APPROVED |
|---|---|---|---|
| | SEE SHEET#1. | | |
| | | | |

| LED Assy. No. | Chip | | | Lens Appearance | Electro-Optical Data @ 20mA | | | | Viewing Angle 2 θ ½ (Deg) | LED P/N |
|---|---|---|---|---|---|---|---|---|---|---|
| | Material | Peak Wave Length | Emitted Color | | If (mA) | Vf (V) | | Iv (mcd) | | |
| | | | | | MAX | TYP | MAX | TYP | | |
| ELM2XXX3UBWC | GaN/SiC | 470 | BLUE | WATER CLEAR | 30 | 4 | 4.5 | 400 | 30 | 3UBWC-0.6K-F |
| ELM2XXX3SGC | GaP/GaP | 568 | GREEN | WATER CLEAR | 30 | 2.1 | 2.8 | 50 | 20 | 3SGC-F |
| ELM2XXX3SGD | GaP/GaP | 568 | GREEN | DIFFUSED | 30 | 2.1 | 2.8 | 30 | 35 | 3SGD-F |
| ELM2XXX3SGT | GaP/GaP | 568 | GREEN | TINTED | 30 | 2.1 | 2.8 | 50 | 20 | 3SGT-F |
| ELM2XXX3SYC | GaAsP/GaP | 590 | YELLOW | WATER CLEAR | 30 | 2.0 | 2.8 | 50 | 20 | 3SYC-F |
| ELM2XXX3SYD | GaAsP/GaP | 590 | YELLOW | DIFFUSED | 30 | 2.0 | 2.8 | 30 | 35 | 3SYD-F |
| ELM2XXX3SYT | GaAsP/GaP | 590 | YELLOW | TINTED | 30 | 2.0 | 2.8 | 50 | 20 | 3SYT-F |
| ELM2XXX3SAC | AlGaInP | 605 | AMBER | WATER CLEAR | 30 | 1.8 | 2.4 | 300 | 20 | 3SAC-F |
| ELM2XXX3SAD | AlGaInP | 605 | AMBER | DIFFUSED | 30 | 1.8 | 2.4 | 100 | 35 | 3SAD-F |
| ELM2XXX3SAT | AlGaInP | 605 | AMBER | TINTED | 30 | 1.8 | 2.4 | 300 | 20 | 3SAT-F |
| ELM2XXX3SRC | GaAlAs/GaAs | 645 | SUPER RED | WATER CLEAR | 30 | 1.7 | 2.4 | 60 | 20 | 3SRC-F |
| ELM2XXX3SRD | GaAlAs/GaAs | 645 | SUPER RED | DIFFUSED | 30 | 1.7 | 2.4 | 40 | 35 | 3SRD-F |
| ELM2XXX3SRT | GaAlAs/GaAs | 645 | SUPER RED | TINTED | 30 | 1.7 | 2.4 | 60 | 20 | 3SRT-F |
| ELM2XXX3UGC | AlGaInP | 570 | GREEN | WATER CLEAR | 30 | 2.1 | 2.4 | 200 | 20 | 3UGC-F |
| ELM2XXX3SUGC | AlGaInP | 570 | GREEN | WATER CLEAR | 30 | 2.1 | 2.4 | 300 | 35 | 3SUGC-F |
| ELM2XXX3UYC | AlGaInP | 590 | YELLOW | WATER CLEAR | 30 | 2.0 | 2.4 | 300 | 20 | 3UYC-F |
| ELM2XXX3SUYC | AlGaInP | 590 | YELLOW | WATER CLEAR | 30 | 2.0 | 2.4 | 400 | 20 | 3SUYC-F |
| ELM2XXX3UUYC | AlGaInP | 590 | YELLOW | WATER CLEAR | 30 | 2.0 | 2.4 | 600 | 35 | 3UUYC-F |
| ELM2XXX3UOC | AlGaInP | 625 | ORANGE | WATER CLEAR | 30 | 1.8 | 2.4 | 300 | 20 | 3UOC-F |
| ELM2XXX3SUOC | AlGaInP | 625 | ORANGE | WATER CLEAR | 30 | 1.8 | 2.4 | 400 | 20 | 3SUOC-F |
| ELM2XXX3URC | GaAlAs/GaAs | 645 | RED | WATER CLEAR | 30 | 1.7 | 2.4 | 200 | 35 | 3URC-F |
| ELM2XXX3SURC | AlGaInP | 640 | RED | WATER CLEAR | 30 | 1.8 | 2.4 | 200 | 20 | 3SURC-F |
| ELM2XXX3UWC | InGaN/Sappire | 6500K | WHITE | WATER CLEAR | 30 | 3.4 | 3.8 | 1000 | 35 | 3UWC1.035C-F |

STANDARD TOLERANCE
( UNLESS OTHERWISE SPECIFIED )
±10% ALL VALUES ANGULAR
X° ± 5°

BIVAR®
4 THOMAS, IRVINE, CA. 92618
TEL: (949) 951-8808 FAX: (949) 951-3974

TITLE: EXTRUDED VERTICAL T-1 (3mm) LED STANDARD PROFILE SPACER ASSY

| DESIGNED: | DATE: | PART NO: | REVISION: |
|---|---|---|---|
| Minh Doan | 07/27/12 | ELM2XXX3XX | J |
| CHECKED: T. Yln | DATE: 07/27/12 | CAGE CODE : 32559 | SHEET # 3 OF 5 |

CAD GENERATED DOCUMENT, DO NOT MEASURE DRAWING.

| REV. | DESCRIPTION | DATE | APPROVED |
|---|---|---|---|
| | SEE SHEET#1. | | |
| | | | |

| LED Assy. No. | Chip | | | Lens Appearance | Absolute Max. Ratings | | | Electro-Optical Data @ 2mA | | | Viewing Angle 2 Θ ½ (Deg) | LED P/N |
|---|---|---|---|---|---|---|---|---|---|---|---|---|
| | Material | Peak Wave Length λp(nm) | Emitted Color | | Pd (mW) | If (mA) | Peak If(mA) | Vf (V) TYP | Vf (V) MAX | Iv (mcd) TYP | | |
| ELM2XXX3BWDL | GaN/siC | 430 | BLUE | DIFFUSED | 20 | 7 | - | 3.8 | 4.2 | 2.5 | 35 | 3BWDL-F |
| ELM2XXX3GDL | GaP/GaP | 568 | GREEN | DIFFUSED | 10 | 7 | - | 2.1 | 2.6 | 4.0 | 35 | 3GDL-F |
| ELM2XXX3PGDL | GaP/GaP | 555 | PURE GREEN | DIFFUSED | 10 | 7 | - | 2.1 | 2.6 | 0.2 | 35 | 3PGDL-F |
| ELM2XXX3YDL | GaAsP/GaP | 590 | YELLOW | DIFFUSED | 10 | 7 | - | 2.0 | 2.6 | 2.0 | 35 | 3YDL-F |
| ELM2XXX3ADL | GaAsP/GaP | 605 | AMBER | DIFFUSED | 10 | 7 | - | 2.0 | 2.6 | 4.0 | 35 | 3ADL-F |
| ELM2XXX3HDL | GaAsP/GaP | 625 | HE RED | DIFFUSED | 10 | 7 | - | 2.0 | 2.6 | 2.5 | 35 | 3HDL-F |
| ELM2XXX3RDL | GaP/GaP | 700 | RED | DIFFUSED | 10 | 7 | - | 2.1 | 2.6 | 0.5 | 35 | 3RDL-F |
| ELM2XXX3SRDL | GaAlAs/GaAs | 645 | RED | DIFFUSED | 10 | 7 | - | 2.0 | - | 8.0 | 35 | 3SRDL-F |

| Assembly P/N | Peak Wave Length λp(nm) | Emitted Color | Lens Appearance | Electro-Optical Data | | | | Viewing Angle 2 θ½ (Deg) | LED P/N |
|---|---|---|---|---|---|---|---|---|---|
| | | | | If (mA) MAX | Vf (V) TYP | Vf (V) MAX | Iv (mcd) TYP | | |
| **5 Volt** | | | | **Data @ 5V** | | | | | |
| ELM2XXX3BWD5V | BLUE | 430 | DIFFUSED | - | - | 5 | 10 | 35 | 3BWD5V-F |
| ELM2XXX3GC5V | GREEN | 568 | WATER CLEAR | - | - | 5 | 40 | 20 | 3GC5V-F |
| ELM2XXX3GD5V | GREEN | 568 | DIFFUSED | - | - | 5 | 25 | 35 | 3GD5V-F |
| ELM2XXX3GT5V | GREEN | 568 | TINTED | - | - | 5 | 40 | 20 | 3GT5V-F |
| ELM2XXX3AD5V | AMBER | 605 | DIFFUSED | - | - | 5 | 25 | 35 | 3AD5V-F |
| ELM2XXX3HD5V | HE RED | 625 | DIFFUSED | - | - | 5 | 30 | 35 | 3HD5V-F |
| ELM2XXX3RD5V | RED | 700 | DIFFUSED | - | - | 5 | 2 | 35 | 3RD5V-F |
| ELM2XXX3YD5V | YELLOW | 590 | DIFFUSED | - | - | 5 | 20 | 35 | 3YD5V-F |
| **12 Volt** | | | | **Data @ 12V** | | | | | |
| ELM2XXX3GC12V | GREEN | 568 | WATER CLEAR | - | - | 12 | 40 | 20 | 3GC12V-F |
| ELM2XXX3GD12V | GREEN | 568 | DIFFUSED | - | - | 12 | 25 | 35 | 3GD12V-F |
| ELM2XXX3HC12V | HE RED | 625 | WATER CLEAR | - | - | 12 | 50 | 20 | 3HC12V-F |
| ELM2XXX3HD12V | HE RED | 625 | DIFFUSED | - | - | 12 | 30 | 35 | 3HD12V-F |
| ELM2XXX3RC12V | RED | 700 | WATER CLEAR | - | - | 12 | 6 | 20 | 3RC12V-F |
| ELM2XXX3RD12V | RED | 700 | DIFFUSED | - | - | 12 | 2 | 35 | 3RD12V-F |
| ELM2XXX3YC12V | YELLOW | 590 | WATER CLEAR | - | - | 12 | 40 | 20 | 3YC12V-F |
| ELM2XXX3YD12V | YELLOW | 590 | DIFFUSED | - | - | 12 | 25 | 35 | 3YD12V-F |

STANDARD TOLERANCE
( UNLESS OTHERWISE SPECIFIED )
±10% ALL VALUES ANGULAR
X° ± 5°

BIVAR®
4 THOMAS, IRVINE, CA. 92618
TEL: (949) 951-8808 FAX: (949) 951-3974

TITLE: EXTRUDED VERTICAL T-1 (3mm) LED STANDARD PROFILE SPACER ASSY

| DESIGNED: | DATE: | PART NO: | REVISION: |
|---|---|---|---|
| Minh Doan | 07/27/12 | ELM2XXX3XX | J |
| CHECKED: T. Yin | DATE: 07/27/12 | CAGE CODE : 32559 | SHEET # 4 OF 5 |

CAD GENERATED DOCUMENT, DO NOT MEASURE DRAWING.

| REV. | DESCRIPTION | DATE | APPROVED |
|---|---|---|---|
| | SEE SHEET #1 | | |
| | | | |
| | | | |
| | | | |
| | | | |
| | | | |

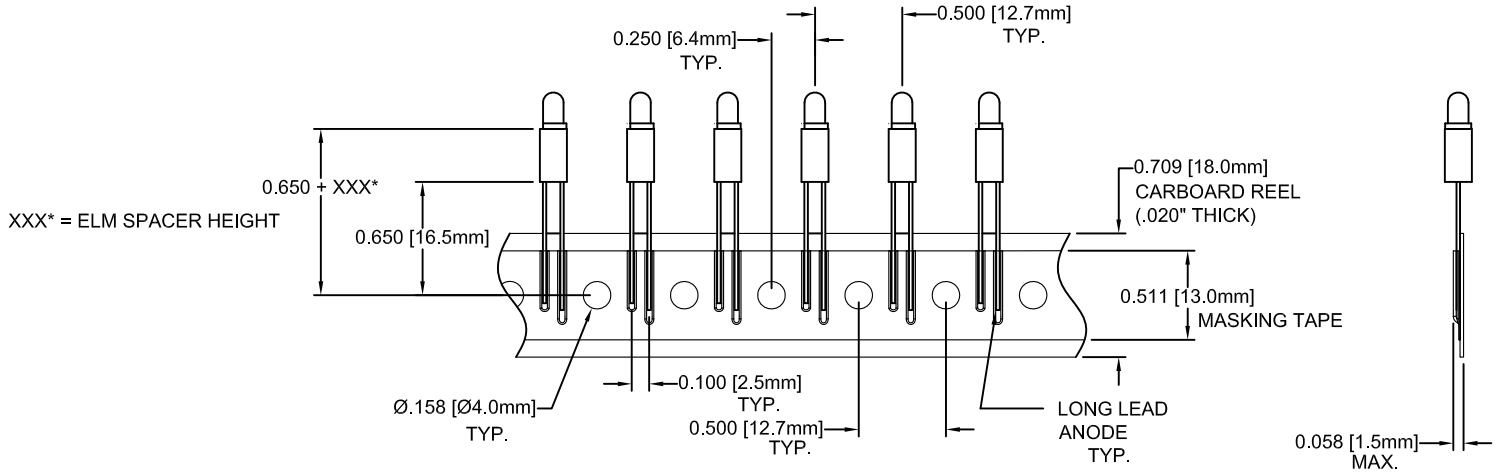


DIRECTION OF FEED →

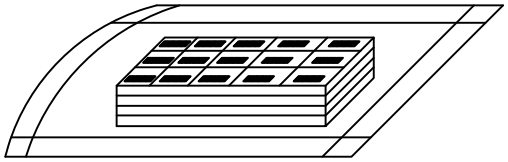

STANDARD PACKAGING TRAY

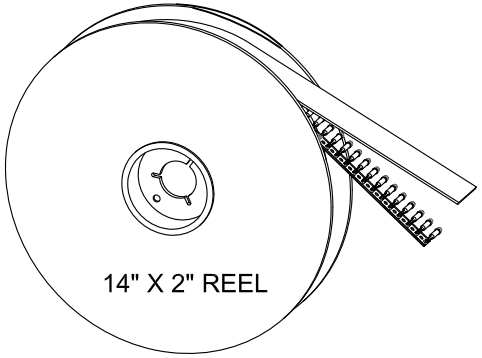


TAPE & REEL
1,000 pcs / reel

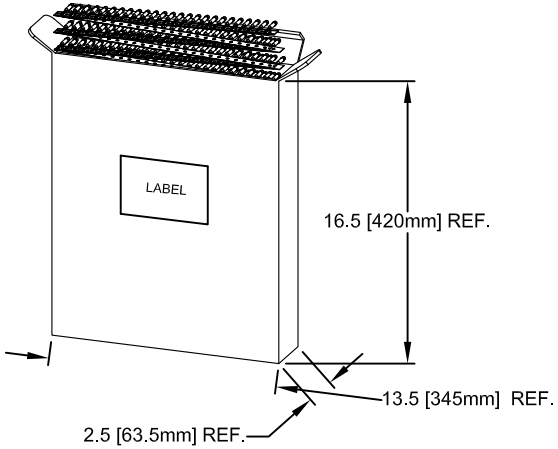


AMMO PACK
2,000 pcs / box

NOTE:
1. STANDARD PART NUMBERS ARE PACKAGED IN LOOSE PIECES USING PACKAGING TRAYS
2. ADD "T" SUFFIX TO PART NUMBER FOR TAPE AND REEL PACKAGING OPTION (1,000 PCS/REEL)
3. ADD "A" SUFFIX TO PART NUMBER FOR AMMO PACK OPTION (2,000 PCS/BOX)
4. TAPE AND REEL PACKAGING COMPLY TO EIA-468-C

STANDARD TOLERANCE
( UNLESS OTHERWISE SPECIFIED )

| DECIMALS | | ANGULAR | |
|---|---|---|---|
| .X | ± .1 | X° | ± 1° |
| .XX | ± .02 | | |
| .XXX | ± .010 | | |


BIVAR®
4 THOMAS, IRVINE, CA. 92618
TEL: (949) 951-8808 FAX: (949) 951-3974


TITLE: EXTRUDED VERTICAL T1 (3mm) LED STANDARD PROFILE SPACER ASSY

| DESIGNED: | DATE: | PART NO: | REVISION: |
|---|---|---|---|
| David Green | 03/05/04 | ELM2XXX3XX | J |
| CHECKED: M. Chen | DATE: 03/05/04 | CAGE CODE : 32559 | SHEET # 5 OF 5 |

CAD GENERATED DOCUMENT, DO NOT MEASURE DRAWING.

# OCEAN CHIPS
## Океан Электроники
### Поставка электронных компонентов

Компания «Океан Электроники» предлагает заключение долгосрочных отношений при поставках импортных электронных компонентов на взаимовыгодных условиях!

Наши преимущества:

- Поставка оригинальных импортных электронных компонентов напрямую с производств Америки, Европы и Азии, а так же с крупнейших складов мира;
- Широкая линейка поставок активных и пассивных импортных электронных компонентов (более 30 млн. наименований);
- Поставка сложных, дефицитных, либо снятых с производства позиций;
- Оперативные сроки поставки под заказ (от 5 рабочих дней);
- Экспресс доставка в любую точку России;
- Помощь Конструкторского Отдела и консультации квалифицированных инженеров;
- Техническая поддержка проекта, помощь в подборе аналогов, поставка прототипов;
- Поставка электронных компонентов под контролем ВП;
- Система менеджмента качества сертифицирована по Международному стандарту ISO 9001;
- При необходимости вся продукция военного и аэрокосмического назначения проходит испытания и сертификацию в лаборатории (по согласованию с заказчиком);
- Поставка специализированных компонентов военного и аэрокосмического уровня качества (Xilinx, Altera, Analog Devices, Intersil, Interpoint, Microsemi, Actel, Aeroflex, Peregrine, VPT, Syfer, Eurofarad, Texas Instruments, MS Kennedy, Miteq, Cobham, E2V, MA-COM, Hittite, Mini-Circuits, General Dynamics и др.);

Компания «Океан Электроники» является официальным дистрибьютором и эксклюзивным представителем в России одного из крупнейших производителей разъемов военного и аэрокосмического назначения **«JONHON»**, а так же официальным дистрибьютором и эксклюзивным представителем в России производителя высокотехнологичных и надежных решений для передачи СВЧ сигналов **«FORSTAR»**.

AVIC JONHON

**«JONHON»** (основан в 1970 г.)

Разъемы специального, военного и аэрокосмического назначения:

(Применяются в военной, авиационной, аэрокосмической, морской, железнодорожной, горно- и нефтедобывающей отраслях промышленности)

**«FORSTAR»** (основан в 1998 г.)

ВЧ соединители, коаксиальные кабели, кабельные сборки и микроволновые компоненты:

(Применяются в телекоммуникациях гражданского и специального назначения, в средствах связи, РЛС, а так же военной, авиационной и аэрокосмической отраслях промышленности).

FORSTAR®

Телефон: 8 (812) 309-75-97 (многоканальный)
Факс: 8 (812) 320-03-32
Электронная почта: ocean@oceanchips.ru
Web: http://oceanchips.ru/
Адрес: 198099, г. Санкт-Петербург, ул. Калинина, д. 2, корп. 4, лит. А