Microsemi
SCOTTSDALE DIVISION

1N2804 thru 1N2846B and 1N4557 thru 1N4564B

50 Watt Zener Diodes

DESCRIPTION

These high power 50 W Zener diodes represented by the JEDEC registered 1N2804 thru 1N2846B and 1N4557 thru 1N4564B series provide voltage regulation in a selection over a 3.9 V to 200 V broad range of voltages. They may be operated up to 50 W with adequate mounting and heat sinking with their low thermal resistance. These Zeners are also available in JAN, JANTX, JANTXV military qualifications. Microsemi also offers numerous other Zener products to meet higher and lower power applications.

IMPORTANT: For the most current data, consult *MICROSEMI's* website: http://www.microsemi.com

APPEARANCE

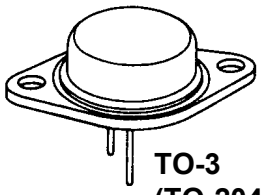

TO-3 (TO-204AD)

FEATURES

- JEDEC registered 1N2804 thru 1N2846B and 1N4557 thru 1N4564B
- Internal solder bond construction
- Hermetically sealed (welded)
- Zener Voltage 3.9V to 200V.
- Also available in JAN, JANTX, and JANTXV qualifications per MIL-PRF-19500/114 by adding the JAN, JANTX, or JANTXV prefixes to part numbers for desired level of screening; (e.g. JANTX1N2804B, etc.
- Standard polarity is anode to case
- Reverse polarity with cathode to case by designating R suffix in part number, e.g. 1N2804RB, etc.
- Consult factory for surface mount equivalents

APPLICATIONS / BENEFITS

- Regulates voltage over a broad operating current and temperature range
- Standard voltage tolerances are +/- 5% with B suffix, +/-10% with an A suffix, and +/-20% with no suffix
- Consult factory for +/-2% or +/-1% with a C or D suffix respectively
- Reverse polarity available
- Nonsensitive to ESD per MIL-STD-750 Method 1020
- Inherently radiation hard as described in Microsemi MicroNote 050

MAXIMUM RATINGS

- Junction Temperatures: -65°C to +175°C
- Storage Temperatures: -65°C to +200°C
- DC Power Dissipation: 50 watts at $T_C \leq 75$ °C
- Power Derating: 0.5W/°C above 75°C
- Forward Voltage @ 10 A: 1.5 Volts
- THERMAL RESISTANCE: 2.0 °C/W maximum junction to base (1.5 °C/W typical)
- Solder temperatures: 260 °C for 10 s (max)

MECHANICAL AND PACKAGING

- CASE: Industry Standard TO-3 (TO-204AD), hermetically sealed, 0.052 inch diameter pins.
- FINISH: All external surfaces are corrosion resistant and terminal solderable.
- POLARITY: Standard Polarity units are connected anode to case. Reverse polarity (cathode to case) is indicated by Suffix R in part number
- WEIGHT: 15 grams.
- MOUNTING HARDWARE: Consult factory for optional insulator and sheet metal screws
- See package dimensions on last page

Copyright © 2003

Microsemi
Scottsdale Division
8700 E. Thomas Rd. PO Box 1390, Scottsdale, AZ 85252 USA, (480) 941-6300, Fax: (480) 947-1503

*ELECTRICAL CHARACTERISTICS @ 25°C

JEDEC TYPE NO. (Note 1)	NOMINAL ZENER VOLTAGE V_Z @ I_{ZT} (Note 2) Volts	ZENER TEST CURRENT (I_{ZT}) mA	MAX. ZENER IMPEDANCE (Note 3) Z_{ZT} @ I_{ZT} OHMS	MAX. ZENER IMPEDANCE (Note 3) Z_{ZK} @ 5mA (I_{ZK}) OHMS	MAX. DC ZENER CURRENT (I_{ZM} @ 75°C Case Temp. (Note 4) mA	TYPICAL ZENER VOLTAGE Temp. Coeff. α_{VZ} %/°C	MAXIMUM LEAKAGE CURRENT** I_R @ V_R µA	MAXIMUM LEAKAGE CURRENT** I_R @ V_R V
†1N4557B	3.9	3200	0.16	400	11,900	-0.046	150	0.5
†1N4558B	4.3	2900	0.16	500	10,650	-0.033	150	0.5
†1N4559B	4.7	2650	0.12	600	9,700	-0.015	100	1
†1N4560B	5.1	2450	0.12	650	8,900	+/-0.010	20	1
†1N4561B	5.6	2250	0.12	900	8,100	+0.03	20	1
†1N4562B	6.2	2000	0.14	1000	7,300	+0.049	20	2
1N4563B	6.8	1850	0.16	200	6,650	+0.053	10	2
1N4564B	7.5	1650	0.24	100	6,050	+0.057	10	3
†1N2804B	6.8	1850	0.2	70	7,400	.040	150	4.5
†1N2805B	7.5	1700	0.3	70	6,600	.045	100	5
†1N2806B	8.2	1500	0.4	70	5,800	.048	50	5.4
†1N2807B	9.1	1370	0.5	70	5,300	.050	25	6.1
†1N2808B	10	1200	0.6	80	4,800	.055	25	6.7
†1N2809B	11	1100	0.8	80	4,300	.060	10	8.4
†1N2810B	12	1000	1.0	80	4,000	.065	10	9.1
†1N2811B	13	960	1.1	80	3,700	.065	10	9.9
1N2812B	14	890	1.2	80	3,400	.070	10	10.6
†1N2813B	15	830	1.4	80	3,100	.070	10	11.4
†1N2814B	16	780	1.6	80	2,950	.070	10	12.2
1N2815B	17	740	1.8	80	2,750	.075	10	13.0
†1N2816B	18	700	2.0	80	2,550	.075	10	13.7
1N2817B	19	660	2.2	80	2,450	.075	10	14.4
†1N2818B	20	630	2.4	80	2,350	.075	10	15.2
†1N2819B	22	570	2.5	80	2,100	.080	10	16.7
†1N2820B	24	520	2.6	80	1,950	.080	10	18.2
1N2821B	25	500	2.7	90	1,850	.080	10	19
†1N2822B	27	460	2.8	90	1,650	.085	10	20.6
†1N2823B	30	420	3.0	90	1,550	.085	10	22.8
†1N2824B	33	380	3.2	90	1,450	.085	10	25.1
†1N2825B	36	350	3.5	90	1,300	.085	10	27.4
†1N2826B	39	320	4.0	90	1,175	.090	10	29.7
†1N2827B	43	290	4.5	90	1,075	.090	10	32.7
1N2828B	45	280	4.5	100	1,030	.090	10	34.2
†1N2829B	47	270	5.0	100	980	.090	10	35.8
1N2830B	50	250	5.0	100	935	.090	10	38
†1N2831B	51	245	5.2	100	925	.090	10	38.8
†1N2832B	56	220	6	110	825	.090	10	42.6
†1N2833B	62	200	7	120	735	.090	10	47.1
†1N2834B	68	180	8	140	670	.090	10	51.7
†1N2835B	75	170	9	150	600	.090	10	56
†1N2836B	82	150	11	160	550	.090	10	62.2
†1N2837B	91	140	15	180	470	.090	10	69.2
†1N2838B	100	120	20	200	450	.090	10	76
1N2839B	105	120	25	210	430	.095	10	79.8
†1N2840B	110	110	30	220	410	.095	10	83.6
†1N2841B	120	100	40	240	375	.095	10	91.2
†1N2842B	130	95	50	275	345	.095	10	98.8
†1N2843B	150	85	75	400	300	.095	10	114.0
†1N2844B	160	80	80	450	285	.095	10	121.6
†1N2845B	180	68	90	525	250	.095	10	136.8
†1N2846B	200	65	100	600	220	.100	10	152.0

*JEDEC Registered Data. **Not JEDEC Data.
†Have JAN, JANTX and JANTXV Qualifications to MIL-S-19500/114.

See further notes on following page

Copyright © 2003

Microsemi
Scottsdale Division
8700 E. Thomas Rd. PO Box 1390, Scottsdale, AZ 85252 USA, (480) 941-6300, Fax: (480) 947-1503

NOTES:

1. The JEDEC type numbers shown (B suffix) have a +/- 5% tolerance on nominal zener voltage. The suffix A is used to identify +/-10% tolerance; no suffix indicates +/-20% tolerance. If tighter tolerance is required, consult factory. Standard polarity units have the anode connected to the case. Reverse polarity (cathode-to-case) units are available and are indicated by suffix R in the part number.
2. Zener Voltage (V_Z) is measured with junction in thermal equilibrium with 30°C base temperature. The test currents (I_{ZT}) have been selected so that at nominal voltages the dissipation is a constant 12.5 watts. This results in a nominal junction temperature rise of 18.75°C .
3. The zener impedance is derived from the 60 cycle ac voltage, which results when an ac current having an rms value equal to 10% of the dc zener current (I_{ZT} or I_{ZK}) is superimposed on I_{ZT} or I_{ZK}. Zener impedance is measured at 2 points to ensure a sharp knee on the breakdown curve and to eliminate unstable units. A curve showing the variation of zener impedance vs. zener current for six representative types is shown in Figure 3. Also see MicroNote 202 for further information.
4. The values of I_{ZM} are calculated for a +/-5% tolerance on nominal zener voltage. Allowance has been made for the rise in zener voltage above V_{ZT} that results from zener impedance and the increase in junction temperature as power dissipation approaches 50 watts. In the case of individual diodes, I_{ZM} is that value of current that results in a dissipation of 50 watts.

GRAPHS AND CIRCUITS

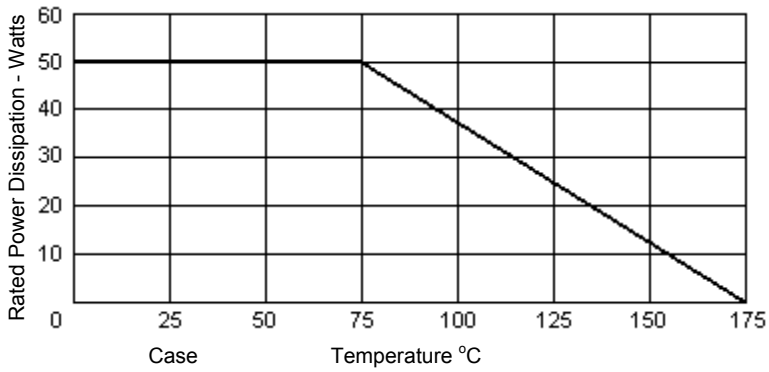

FIGURE 2
POWER DERATING CURVE

Typical circuit connections for anode-to-case and cathode-to-case polarities (standard and reverse polarities, respectively).

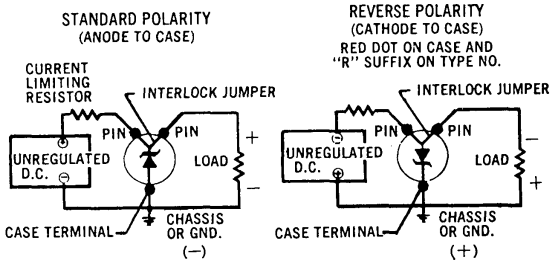

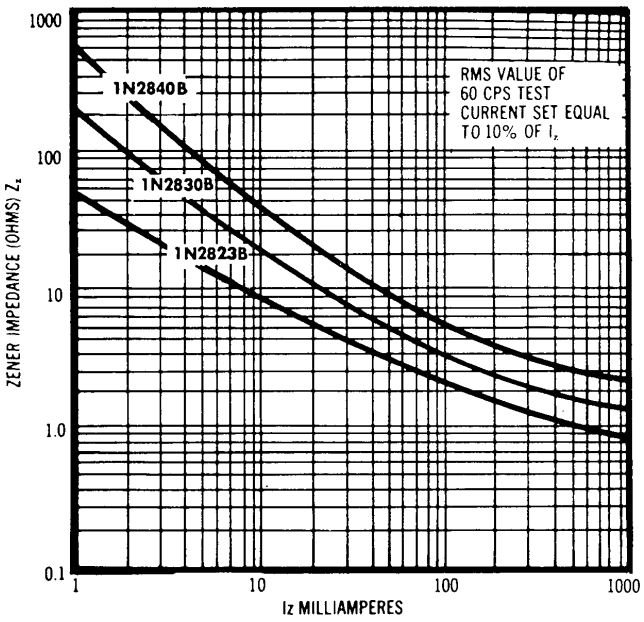

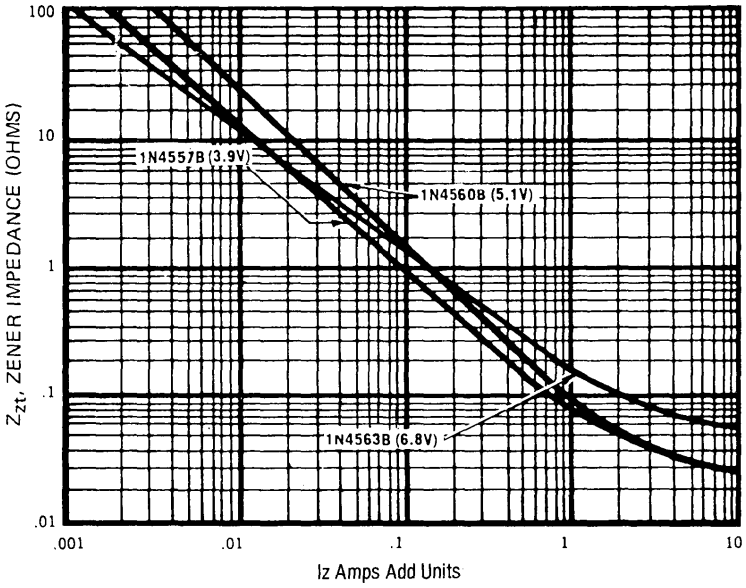

FIGURE GROUP 3
TYPICAL ZENER IMPEDANCE vs. ZENER CURRENT FOR TYPES SHOWN

www.Microsemi.COM

PACKAGE DIMENSIONS

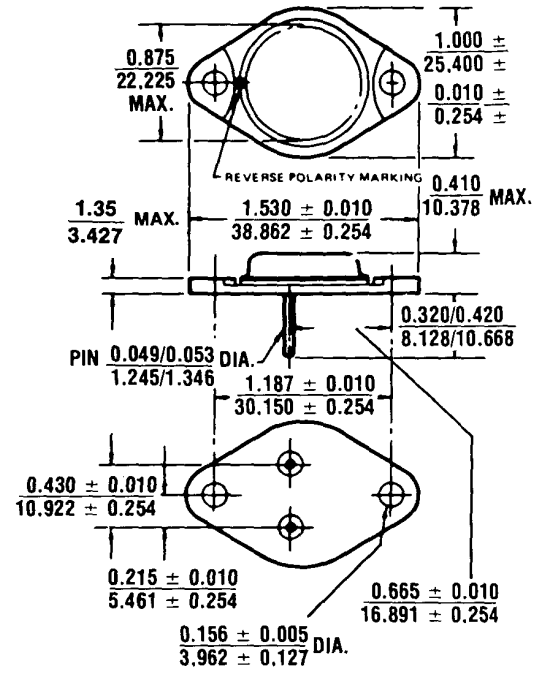

All dimensions in INCH / m.m.

OCEAN CHIPS
Океан Электроники
Поставка электронных компонентов

Компания «Океан Электроники» предлагает заключение долгосрочных отношений при поставках импортных электронных компонентов на взаимовыгодных условиях!

Наши преимущества:

- Поставка оригинальных импортных электронных компонентов напрямую с производств Америки, Европы и Азии, а так же с крупнейших складов мира;
- Широкая линейка поставок активных и пассивных импортных электронных компонентов (более 30 млн. наименований);
- Поставка сложных, дефицитных, либо снятых с производства позиций;
- Оперативные сроки поставки под заказ (от 5 рабочих дней);
- Экспресс доставка в любую точку России;
- Помощь Конструкторского Отдела и консультации квалифицированных инженеров;
- Техническая поддержка проекта, помощь в подборе аналогов, поставка прототипов;
- Поставка электронных компонентов под контролем ВП;
- Система менеджмента качества сертифицирована по Международному стандарту ISO 9001;
- При необходимости вся продукция военного и аэрокосмического назначения проходит испытания и сертификацию в лаборатории (по согласованию с заказчиком);
- Поставка специализированных компонентов военного и аэрокосмического уровня качества (Xilinx, Altera, Analog Devices, Intersil, Interpoint, Microsemi, Actel, Aeroflex, Peregrine, VPT, Syfer, Eurofarad, Texas Instruments, MS Kennedy, Miteq, Cobham, E2V, MA-COM, Hittite, Mini-Circuits, General Dynamics и др.);

Компания «Океан Электроники» является официальным дистрибьютором и эксклюзивным представителем в России одного из крупнейших производителей разъемов военного и аэрокосмического назначения **«JONHON»**, а так же официальным дистрибьютором и эксклюзивным представителем в России производителя высокотехнологичных и надежных решений для передачи СВЧ сигналов **«FORSTAR»**.

AVIC JONHON

«JONHON» (основан в 1970 г.)

Разъемы специального, военного и аэрокосмического назначения:

(Применяются в военной, авиационной, аэрокосмической, морской, железнодорожной, горно- и нефтедобывающей отраслях промышленности)

«FORSTAR» (основан в 1998 г.)

ВЧ соединители, коаксиальные кабели, кабельные сборки и микроволновые компоненты:

(Применяются в телекоммуникациях гражданского и специального назначения, в средствах связи, РЛС, а так же военной, авиационной и аэрокосмической отраслях промышленности).

FORSTAR®

Телефон: 8 (812) 309-75-97 (многоканальный)
Факс: 8 (812) 320-03-32
Электронная почта: ocean@oceanchips.ru
Web: http://oceanchips.ru/
Адрес: 198099, г. Санкт-Петербург, ул. Калинина, д. 2, корп. 4, лит. А