ACT2802/ACT2802B/ACT2802C

Rev 7, 15-Jul-16

5V/2.5A Backup Battery Pack Manager

FEATURES

- Dedicated Single Chip Solution for Mobile Power With Minimal Component Count
- 5V/2.5A Constant Output Current Limit in Boost Mode
- 2.5A Switching Charger Current Limit
- Programmable 4.1V to 4.35V Battery Voltage
- 95% Boost Efficiency（Vbat=4.1V）
- Adaptive to 10mA-2400mA Input Sources
- Battery Disconnection at Output Short
- <10μA Low Battery Leakage Current at HZ Mode During Storage
- Boost Auto Turn-off at No Load and Push Button Turn-on
- Battery Over Current, Over Voltage, Over Temperature and Short Circuit Protections
- Boost Auto Startup with Load Detection
- Up to 3.0A Input Current Limit with Prioritized Power Path to Output
- 5V+/-100mV Output Voltage in Boost Mode
- 1.1MHz/0.55MHz Switching Frequencies
- 2.2uH Inductor and Low Profile Ceramic Capacitor
- 4 LEDs Battery Level and Status Indication
- Battery Impedance Compensation
- Full Cycle of Battery Charge Management Preconditioning, Fast Charge, Top off and End of Charge
- Charge Current Foldback at 110°C Die Temperature
- IC Over Temperature Protection at 160°C
- QFN4x4-24 Package

APPLICATIONS

- Backup Battery Pack
- Power Bank
- Mobile Power
- Standalone Battery Charger with USB Output

GENERAL DESCRIPTION

ACT2802/ACT2802B/ACT2802C is a space-saving and high-performance low-profile single-chip solution for backup battery pack and standalone battery charger. ACT2802/ACT2802B/ACT2802C integrates all the functions that a backup battery pack needs, including switching charger, boost converter and LED indication.

ACT2802/ACT2802B/ACT2802C operates at 1.1MHz for switching charger and 0.55MHz for boost converter allowing tiny external inductor and capacitors. ACT2802/ACT2802B/ACT2802C provides a direct power path from input to output with programmable current limit while providing power to switching charger. Output has higher priority than battery charger if the programmed input current limit is reached.

ACT2802/ACT2802B/ACT2802C charges battery with full cycle of preconditioning, fast charge with constant current and constant voltage until end of charge. The battery charger is thermally regulated at 110°C with charge current foldback.

ACT2802/ACT2802B/ACT2802C boost converter steps battery voltage up to 5V. Boost converter features high efficiency, constant current regulation, short circuit protection and over voltage protection.

ACT2802/ACT2802B/ACT2802C provides 3.5mA constant currents to drive 4 LEDs to indicate battery level and charge status. Battery impedance is compensated for battery level indication.

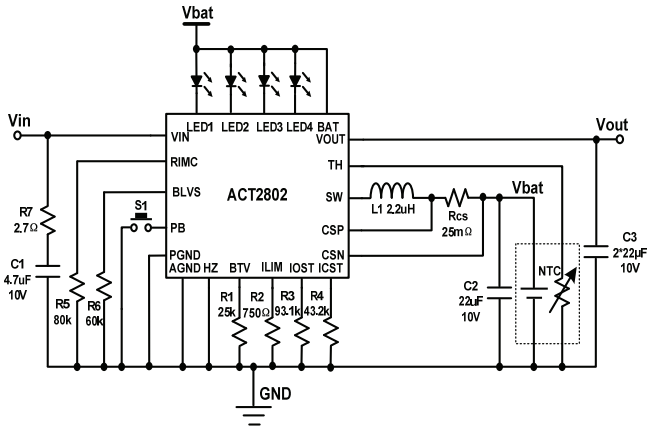

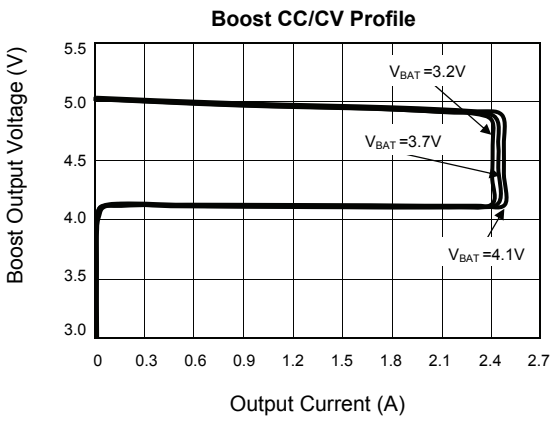

Copyright © 2016 Active-Semi, Inc.

ORDERING INFORMATION

PART NUMBER	OUTPUT	FLASHLIGHT	PB TURN OFF BOOST	LEDS AL-WAYS ON IN BOOST	LATCH OFF AT BOOST UVLO	BOOST LIGHT LOAD OFF TIME	PACKAGE
ACT2802QL-T1028	5V/2.5A	No	Yes	No	Yes	16s	QFN44-24
ACT2802BQL-T1028	5V/2.5A	Yes	No	Yes	Yes	16s	QFN44-24
ACT2802CQL-T1028	5V/2.5A	Yes	No	No	Yes	16s	QFN44-24

PIN CONFIGURATION

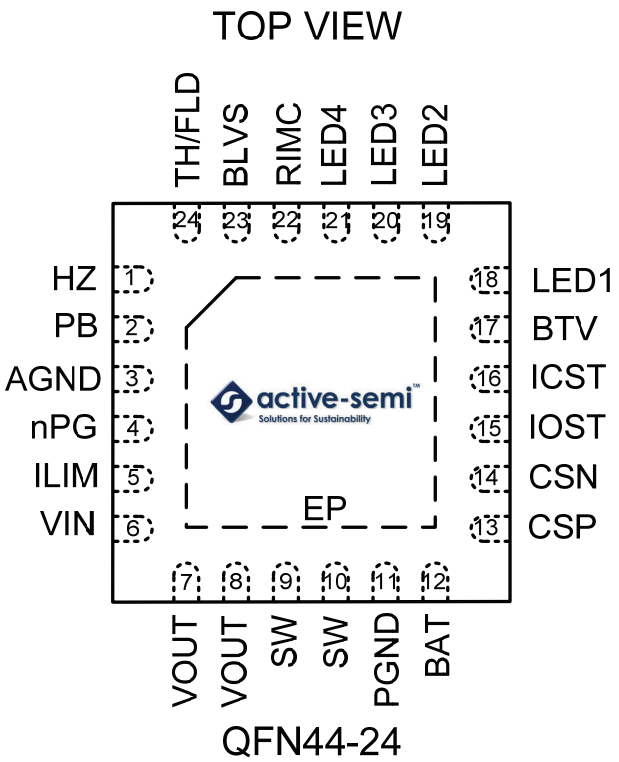

Copyright © 2016 Active-Semi, Inc.

PIN DESCRIPTIONS

PIN	NAME	DESCRIPTION
1	HZ	Boost/high-Z mode enable pin, internally pulled up by a 3MΩ resistor to battery. When HZ pin is pulled ground, boost is enabled if VIN is not present.
2	PB	Push button input, connect a push button from this pin to AGND, internally pulled up by a 3MΩ resistor to battery. PB starts up boost converter if HZ pin is grounded and VIN is not present. For ACT2802B/ACT2802C, if this pin is pushed for 3s, flashlight is enabled.
3	AGND	Logic Ground. AGND must be connected to PGND externally through ground plane.
4	nPG	Drive external P-FET to protect output short circuit and leakage during shutdown. nPG pin is pulled up to VOUT internally. nPG pin is pulled low if VOUT is in the range.
5	ILIM	Input current limit setting pin. Connect a resistor from this pin to AGND to set the input current limit. The current setting ranges from 1.0A-3.0A.
6	VIN	USB or AC adaptor input. When VIN is valid, charge and power path is enabled.
7, 8	VOUT	Output pin. Bypass to PGND with a high quality low ESR and ESL ceramic capacitor placed as close to the IC as possible.
9, 10	SW	Internal switch to output inductor terminal.
11	PGND	Power ground. PGND is connected to the source of low-side N-channel MOSFET and the MOSFET's gate driver. PGND must be connected to AGND externally through ground plane.
12	BAT	Battery input. Connected to the battery pack positive terminal to provide power in High-Z mode. Bypass to PGND with a high quality ceramic capacitor placed as close to the IC as possible.
13	CSP	Positive terminal of charge current sense input. Kevin sense is required with 10nF ceramic capacitor right across CSP and CSN pins.
14	CSN	Negative terminal of charge current sense input.
15	IOST	Output current setting. Connect a resistor from this pin to AGND to set output constant current. The current setting ranges from 1.0A-2.5A.
16	ICST	Fast charge current setting pin. Connect a resistor from this pin to AGND to set the charge current. The current setting ranges from 1.0A-2.5A.
17	BTV	Battery termination voltage setting. Connect a resistor from this pin to AGND to program battery charge termination voltage.
18	LED1	Battery level indicator. An internal 3.5mA sink current limit is built in.
19	LED2	Battery level indicator. An internal 3.5mA sink current limit is built in.
20	LED3	Battery level indicator. An internal 3.5mA sink current limit is built in.
21	LED4	Battery level indicator. An internal 3.5mA sink current limit is built in.
22	RIMC	Battery impendence compensation input. Connect to a resistor from this pin to APNG to program the battery impedance.
23	BLVS	Battery level voltage shift. Connect a resistor from this pin to AGND to shift the battery LED indication thresholds.
24	TH/FLD	TH: ACT2802QL-T1028 Temperature sensing input. Connect to battery thermistor terminal. If no use, put 10K pulled down resistor. FLD: ACT2802BQL-T1028/ACT2802CQL-T1028 Open-drain flashlight driver. A internal switch can handle up to 50mA.
25	EP	Exposed pad. Must be soldered to ground on the PCB.

Copyright © 2016 Active-Semi, Inc.

ABSOLUTE MAXIMUM RATINGS①

PARAMETER	VALUE	UNIT
All the Pin to PGND and AGND	-0.3 to 6.5	V
Junction to Ambient Thermal Resistance	40	°C/W
Maximum Power Dissipation	2.5	W
Operating Ambient Temperature	-40 to 85	°C
Operating Junction Temperature	-40 to 150	°C
Storage Junction Temperature	-40 to 150	°C
Lead Temperature (Soldering 10 sec.)	300	°C

①: Do not exceed these limits to prevent damage to the device. Exposure to absolute maximum rating conditions for long periods may affect device reliability.

Copyright © 2016 Active-Semi, Inc.

ELECTRICAL CHARACTERISTICS

(V_{IN} = 5V, T_A = 25°C, unless otherwise specified.)

PARAMETER	TEST CONDITIONS	MIN	TYP	MAX	UNIT
Input Current Limit					
Input Voltage Range		4.5		5.5	V
V_{IN} Over Voltage Protection	VIN rising, V_{IN}_OVP	5.5	6.0	6.5	V
Input Voltage Validation Time	VIN_UVLO<VIN<VIN_OVP		32		ms
Input Current Limit Setting Range	R_{ILIM}=0.806kΩ—2.4kΩ	1.0		3.0	A
Input Current Limit	R_{ILIM}=0.806kΩ		3.0		A
Input Current Limit Gain			2000		
Leakage Current from VOUT to VIN in Boost Mode	3.0V<VBAT<4.35V, Ta=25℃		0	10	μA
Battery Discharge Current in High-Z Mode	3.0V<VBAT<4.35V, Ta=25℃		7.5	15	μA
Power Switches					
VIN-to-VOUT FET on Resistance			80		mΩ
VOUT-to-SW FET on Resistance			60		mΩ
SW-to-PGND FET on Resistance			65		mΩ
Buck Converter					
Switching Frequency		-15%	1.1	+15%	MHz
High Side Switch Peak Current Limit		4.5	6		A
Minimum On-time			100		ns
Over Temperature Protection (OTP)	OTP rising		160		℃
OTP Hysteresis	OTP falling		35		℃
Charge Mode					
Charge Current Setting Range	Rcs=25mΩ, R_{ICST}=20kΩ—50kΩ	1.0		2.5	A
Charge Current Setting (I_{CHRG})	Rcs=25mΩ, R_{ICST}=43.2kΩ		2.1		A
Thermal Regulation Temperature			110		℃
Battery Adjust Voltage (V_{BAJ})	Rbtv=25kΩ		0.1		V
End of Charge (EOC) Voltage		-0.5%	4.1+V_{BAJ}	0.5%	V
EOC Voltage Accuracy	Rbtv=0		4.1		V
Battery Over Voltage Threshold	VBAT rising		4.6		V
Battery Over Voltage Threshold Hysteresis	VBAT falling		200		mV

Copyright © 2016 Active-Semi, Inc.

ELECTRICAL CHARACTERISTICS

(V_{IN} = 5V, T_A = 25°C, unless otherwise specified.)

PARAMETER	TEST CONDITIONS	MIN	TYP	MAX	UNIT
Fast Charge Current	VBAT=3.5V		I_{CHRG}		A
Precondition Charge Current	2.4V≤VBAT≤2.8V, Percent of I_{CHRG}		10		%
Precondition Voltage Threshold	VBAT rising, Rbtv=0		2.8		V
Precondition Voltage Threshold Hysteresis			130		mV
Low VBAT Charge Current	VBAT=1V, R_{ICST}=43.2kΩ		200		mA
EOC Current Threshold	VBAT=4.2V, percent of the fast charge current		15		%
Charge Restart Voltage Threshold			200		mV
TH Upper Temperature Voltage Threshold	Cold detect NTC thermistor, ACT2802QL-T1028		1.5		V
TH Lower Temperature Voltage Threshold	Hot detect NTC thermistor, ACT2802QL-T1028		0.3		V
TH Hysteresis	ACT2802QL-T1028		50		mV
TH Internal Pull-up Current	ACT2802QL-T1028		60		μA
LED Flash Frequency	LED flash 1s on and 1s off		0.5		Hz
Charge Current Foldback					
Charge Current Reduction Threshold1 of Vout1	Starting foldback point	4.59	4.7	4.81	V
Charge Current Reduction Threshold2 of Vout1	Stop foldback point, R_{CS}=25mΩ, R_{ICST}=43.2kΩ		4.57		V
Boost Mode					
Input Voltage Operation Range		3.0		4.5	V
Switching Frequency		-15%	0.55	+15%	MHz
Input Voltage UVLO	VBAT rising		3.3		V
Input Voltage UVLO Hysteresis	VBAT falling		400		mV
Output Voltage (VOUT)	Ta=25℃	4.97	5.05	5.10	V
Output Voltage Accuracy	All conditions	-3	VOUT	2	%
Output Voltage Transient Response	80mA-1A-80mA, 0.1A/us	4.75		5.25	V
	1A-2.0A-1A, 0.1A/us	4.7		5.25	V
Output Over Voltage Protection	VOUT rising		5.7		V
Output Over Voltage Protection Hysteresis	VOUT falling		300		mV

Copyright © 2016 Active-Semi, Inc.

ELECTRICAL CHARACTERISTICS

(V_{IN} = 5V, T_A = 25°C, unless otherwise specified.)

PARAMETER	TEST CONDITIONS	MIN	TYP	MAX	UNIT
Output Current Regulation Range	Rcs=25mΩ, R_{IOST}=37.4kΩ—93.7kΩ	1.0		2.5	A
Output Current Limit	Rcs=25mΩ, R_{IOST}=91kΩ		2.4		A
The Maximum Voltage Across VRcs	All conditions		200		mV
Minimum On-Time			100		ns
Low Side Switch Peak Current Limit	VBAT=3.6V, VOUT=5V	5.6	6.8		A
Soft-Startup Time			400		μs
Under Voltage Protection (UVP Threshold)	VOUT falling		4.25		V
	VOUT rising		4.6		V
UVP Blanking Time During Startup			3		ms
UVP Sense Detection Time	VOUT falling		20		μs
Restart After UVP	Hiccup mode		2		s
Light Load Current Shut off Threshold	VBAT=3.7V, Rcs=25mΩ,R_{IOST}=91kΩ		40	100	mA
Light Load Current Detect Time			16		s
HZ Pin High Voltage	HZ voltage rising		0.9	1.4	V
HZ Pin Low Voltage	HZ voltage falling	0.4	0.75		V
HZ Internal Pull-up Resistor			3		MΩ
PB Turn off Boost Time	ACT2802QL-T1028		1.5		s
PB Turn on Boost Time	All condition		30		ms
LED Indication Time	PB is pushed and released, ACT2802QL-T1028/ACT2802CQL-T1028		5		s
Mode Transition					
Transition Waiting Time between Charge Mode and Boost Mode	TRANTIME		2		s
Battery Level Indication					
Battery Impedance Compensation Range		40		500	mΩ
Battery Impedance Compensation	Rcs=25mΩ, R_{IMC}=200kΩ		200		mΩ
PB High Input Voltage	PB voltage rising		0.9	1.4	V
PB Low Input Voltage	PB voltage falling	0.4	0.75		V

Copyright © 2016 Active-Semi, Inc.

ELECTRICAL CHARACTERISTICS

(V_{IN} = 5V, T_A = 25°C, unless otherwise specified.)

PARAMETER	TEST CONDITIONS	MIN	TYP	MAX	UNIT
PB Internal Pull-up Resistor			3		MΩ
Flashlight Driver					
Flashlight Voltage UVLO	Flashlight rising, ACT2802BQL-T1028/ACT2802CQL-T1028		3.3		V
Flashlight Voltage UVLO Threshold	Flashlight falling, ACT2802BQL-T1028/ACT2802CQL-T1028		2.9		V
Flashlight Driver Current	The current at FLD pin, ACT2802BQL-T1028/ACT2802CQL-T1028		50		mA
PB Turn on Flashlight Time	ACT2802BQL-T1028/ACT2802CQL-T1028		3.0		s
PB Turn off Flashlight Time	ACT2802BQL-T1028/ACT2802CQL-T1028		3.0		s

Copyright © 2016 Active-Semi, Inc.

FUNCTIONAL BLOCK DIAGRAM FOR ACT2802QL-T1028

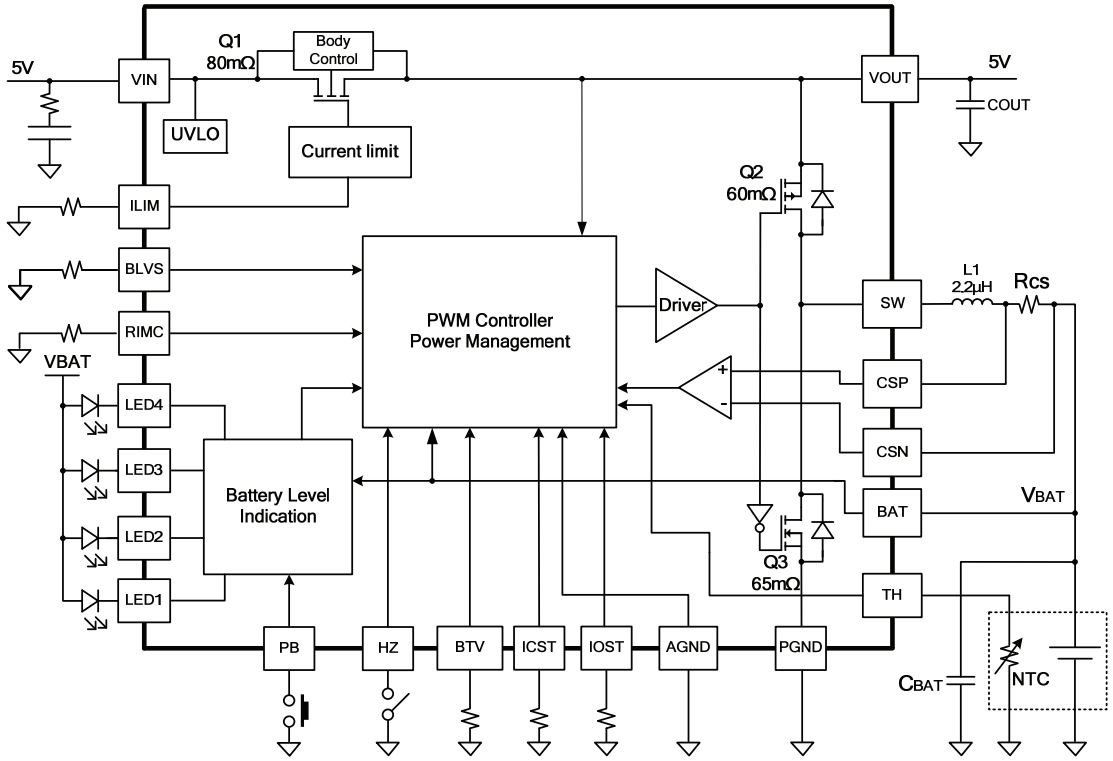

FUNCTIONAL BLOCK DIAGRAM FOR ACT2802BQL-T1028/ ACT2802CQL-T1028

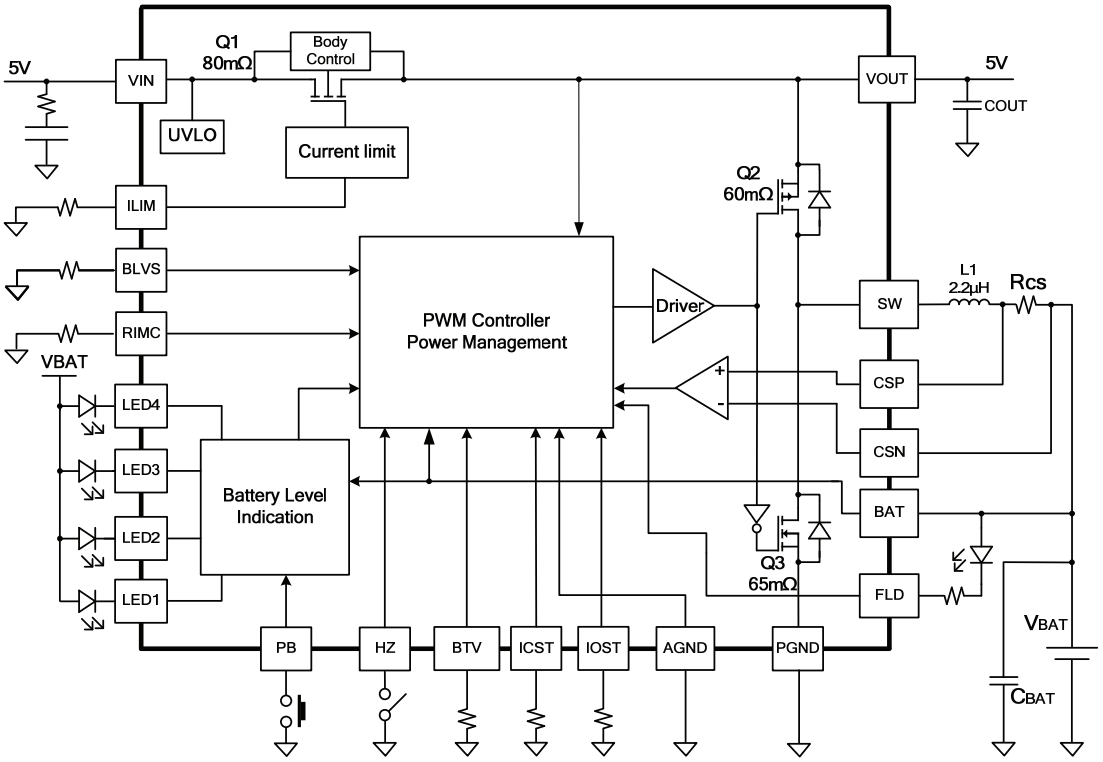

Copyright © 2016 Active-Semi, Inc.

FUNCTIONAL DESCRIPTION

ACT2802/ACT2802B/ACT2802C is a complete battery charging and discharging power management solution for applications of single-cell lithium-based backup battery pack or power bank. There is a power path from input to output with programmable input current limit. When output is over loaded, the input switch Q1 starts going into linear mode and thus output voltage starts to drop. If output voltage drops below 4.25V, the input switch Q1 turns off and restart in 2 seconds.

With the advanced ACT2802/ACT2802B/ ACT2802C architecture, a synchronous buck/boost converter is connected from VOUT to switching node (SW). With the bidirectional architecture, the converter could be configured as either buck to charge battery or boost to discharge battery. With switching charger and discharger, the higher charge current and higher conversion efficiency are achieved.

Modes of Operation

ACT2802/ACT2802B/ACT2802C has 3 operation modes: charge mode, boost mode and high-impedance (HZ) mode. In charge mode, the input current limit Q1 is enabled and Q2 and Q3 operate as a buck converter to charge battery. In boost mode, Q2 and Q3 operate as boost converter to step battery voltage up to +5V at VOUT, and the current limit switch Q1 is turned off, and the reverse current from VOUT to VIN is blocked. In HZ mode, all the switches are turned off and the drainage current from battery is very low. ACT2802 system operation flow chart as shown in Figure 1, and ACT2802B/ACT2802C system operation flow chart as shown in Figure 2.

Any transitions between boost mode and charge mode go through HZ mode by turning off all the switches Q1-Q3 into HZ mode for 2 seconds before enabling the other mode.

The modes are determined by HZ pin and VIN pin as shown in the table 1. A valid VIN voltage forces ACT2802/ACT2802B/ACT2802C into charge mode. Boost mode is enabled if HZ pin is pulled low and VIN is invalid or not present. For ACT2802/ ACT2802B/ACT2802C, when HZ=0, if PB is pulled low more than 30ms, boost converter is enabled. For ACT2802, during boost on, if PB is pressed more than 1.5s, boost converter will be off.

Table 1: Mode Selection

HZ PIN	0	0	1	1
VIN Valid	0	1	0	1
Mode	Boost	Charge	HZ	Charge

Flashlight

ACT2802B/ACT2802C has an flashlight function. Once PB is pressed for more than 3 seconds, the flashlight is switched on. The driver will deliver up to 50mA current to the flashlight. During flashlight on, if PB is pressed for 3 seconds, flashlight will be switched off.

Figure 1:

ACT2802 System Operation Flow Chart

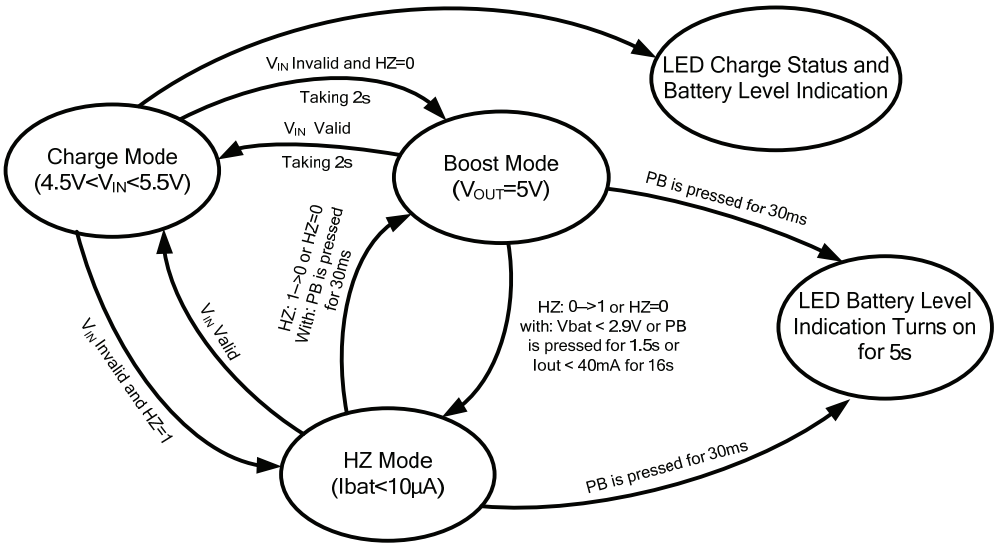

Copyright © 2016 Active-Semi, Inc.

FUNCTIONAL DESCRIPTION

Figure 2:

ACT2802B/ACT2802C System Operation Flow Chart

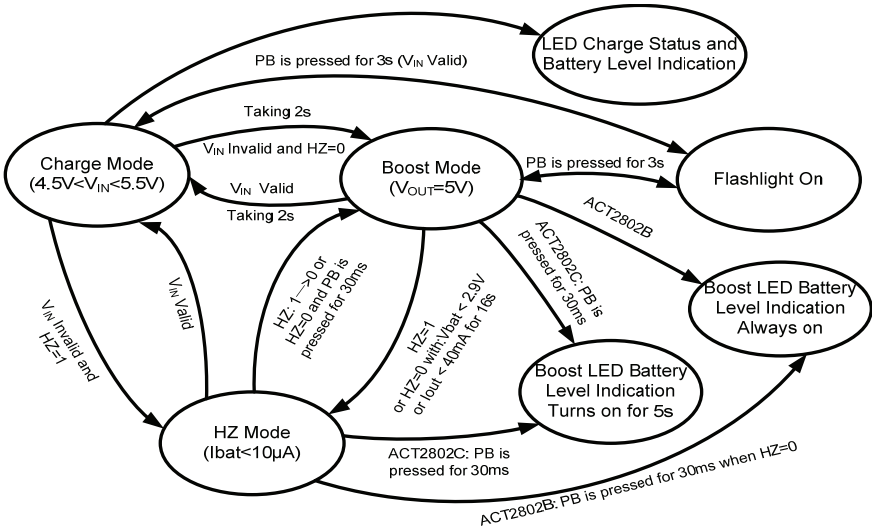

Latch-Off

ACT2802/ACT2802B/ACT2802C has latch off function. If discharging stops due to battery cut-off, and latch off will be triggered, it would prevent battery from discharging again, latch-off is released when input power is recycled.

Input Current Limit

When the input current reaches the programmed value, switch Q1 goes into linear mode and output voltage starts to drop. When output voltage drops to 4.25V, hiccup mode is triggered and switch Q1 turns off and restart in 2 seconds.

Switching Battery Charger

ACT2802/ACT2802B/ACT2802C is configured in charge mode (buck mode) when VIN is valid. In this mode, a battery is charged with preconditioning, fast charge, top-off and end of charge (EOC). The typical charge management is shown in Figure 3 and Figure 4.

CC/CV Regulation Loop

There are CC/CV regulation loops built in ACT2802/ ACT2802B/ACT2802C, which regulates either current or voltage as necessary to ensure fast and safe charging of the battery. In a normal charge cycle, this loop regulates the current to the value set by the external resistor at the ICST pin. Charging continues at this current until the battery cell voltage reaches the termination voltage. At this point the CV loop takes over, and charge current is allowed to decrease as necessary to maintain charging at the termination voltage.

Precondition Charge

A new charging cycle begins with the precondition state, and operation continues in this state until V_{BAT} exceeds the precondition threshold voltage. When operating in precondition state, the cell is charged at a reduced current, 10% of the programmed maximum fast charge constant current. Once V_{BAT} reaches the precondition threshold voltage the state machine jumps to the fast charge state.

Fast Charge

If battery voltage is above preconditioning threshold, buck converter charges battery with constant current. In fast charge state, the ACT2802/ ACT2802B/ACT2802C charges at the current set by the external resistor connected at the ICST pin. During a normal charge cycle fast charge continues in CC mode until V_{BAT} reaches the charge termination voltage, at which point the ACT2802/ ACT2802B/ACT2802C charges in top off state.

Top Off

With the battery voltage approaches the EOC voltage set by the BTV pin. Charge current decreases as charging continues. In the top off state, the cell is charged in constant voltage (CV) mode. During a normal charging cycle charging proceeds until the charge current decreases below the end of charge (EOC) threshold, defined as 15% of fast charge current. When this happens, the state machine terminates the charge cycle and jumps to the EOC state.

Copyright © 2016 Active-Semi, Inc.

FUNCTIONAL DESCRIPTION

End of Charge

When charge current decreases to 15% of set fast charge current, the buck converter goes into end of charge mode and keep monitoring the battery voltage.

Recharge

When battery voltage drops by 200mV below the end of charge voltage, the charger is reinitiated with constant current charge.

Figure 3.

Typical Li+ Charge Profile and ACT2802/ACT2802B/ACT2802C Charge States

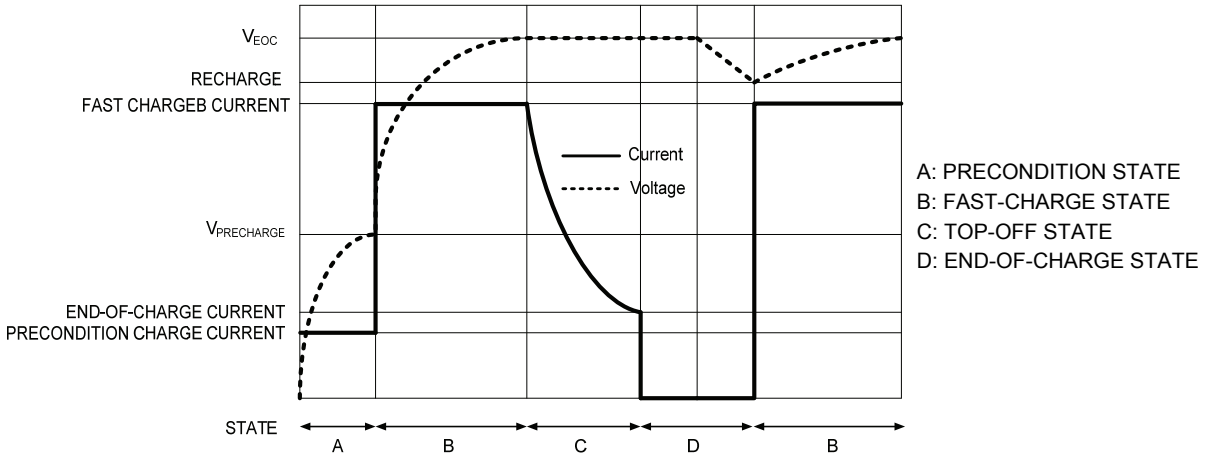

Figure 4.

Charger State Diagram

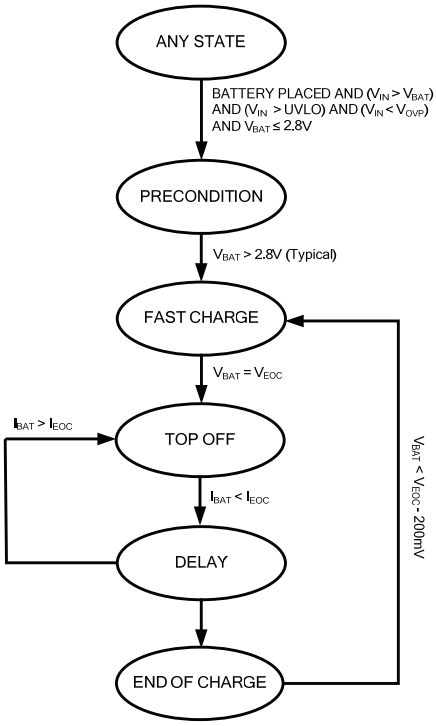

Copyright © 2016 Active-Semi, Inc.

APPLICATIONS INFORMATION

Battery Charge Termination Voltage

Battery charge termination voltage is set by a resistor Rbtv connected from BTV pin to AGND as shown in Figure 5. The battery charge termination voltage is estimated as the following equation:

$$V_{BAT}(V) = 4.1(V) + R_{btv} \times 4 \times 10^{-6}(V) \quad (1)$$

R_{btv} is selected based on the battery voltage rating. 1% accuracy resistor is recommended for R_{btv}.

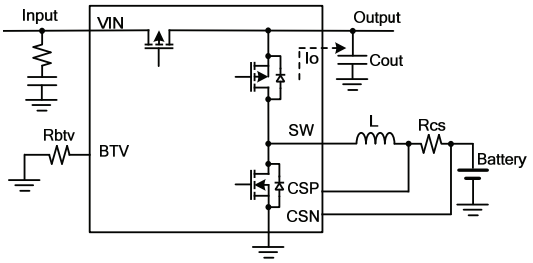

Figure 5. Battery terminal voltage setting circuit

LED Status Indication

4 LEDs ON/OFF and flash show the charge status and the remained capacity level as shown in the table 2. The LED status is based on battery voltage and operation modes. In charge mode, when a battery is fully charged, flashing stops and all the 4 LEDs are solid on.

Battery level voltage shift (BLVS pin)

LED1-4 voltage thresholds are adjusted from HZ mode during charging and discharging based on the compensated impedance. Those thresholds are programmed by a resistor connected from BLVS pin to AGND as shown in Figure 6. The following equation shows the LED4 voltage threshold:

$$V_{BATLED\ 4}(V) = 3.5(V) + 0.01(mA) \times R_{BLVS}(k\Omega) \quad (2)$$

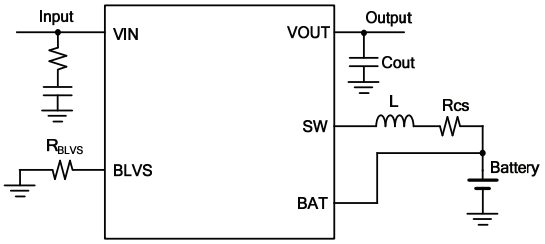

Figure 6. Battery level voltage shift setting circuit

As long as LED4 is set, the other 3 LED thresholds is fixed as shown in the table 3:

Table 3: 4 LED Voltage Thresholds

R_{BLVS} (ohm)	50K	60K	70K	80K
LED1	3.55V	3.65V	3.75V	3.85V
LED2	3.65V	3.75V	3.85V	3.95V
LED3	3.80V	3.90V	4.00V	4.10V
LED4	4.00V	4.10V	4.20V	4.30V

Input Current Limit

An external resistor is used to set the input current limit connected from ILIM pin to AGND as shown in Figure 7. Input current limit has built-in soft startup and current foldback control loop. The input current limit is estimated as the following equation:

$$I_{ILIM}(A) = \frac{2.4\ (V)}{R_{ILIM}(k\Omega)} \quad (3)$$

Table2: LED Indication

	Charge Mode				(Boost or HZ Mode) ACT2802QL-T1028/ ACT2802CQL-T1028:PB time > 30ms			
LED	**LED1**	**LED2**	**LED3**	**LED4**	**LED1**	**LED2**	**LED3**	**LED4**
VBAT<2.9V	**Flash**	**Off**	**Off**	**Off**	**Off**	**Off**	**Off**	**Off**
2.9V≤VBAT<LED1	**Flash**	**Off**	**Off**	**Off**	**Flash**	**Off**	**Off**	**Off**
LED1≤VBAT<LED2	**On**	**Flash**	**Off**	**Off**	**On**	**Off**	**Off**	**Off**
LED2≤VBAT<LED3	**On**	**On**	**Flash**	**Off**	**On**	**On**	**Off**	**Off**
LED3≤VBAT<LED4	**On**	**On**	**On**	**Flash**	**On**	**On**	**On**	**Off**
VBAT≥LED4	**On**	**On**	**On**	**Flash**	**On**	**On**	**On**	**On**
VBAT≥LED4 (End of Charge)	**On**	**On**	**On**	**On**	**On**	**On**	**On**	**On**

Copyright © 2016 Active-Semi, Inc.

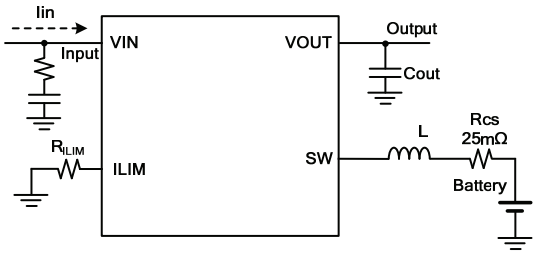

Figure 7. Input current limit setting circuit

Input current limit at various resistor curve is shown in Figure 8.

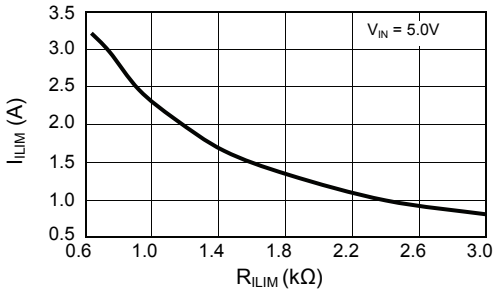

Figure 8. Input current limit setting

The ILIM pin voltage is proportional to input current until input current is limited, as shown in Figure 9.

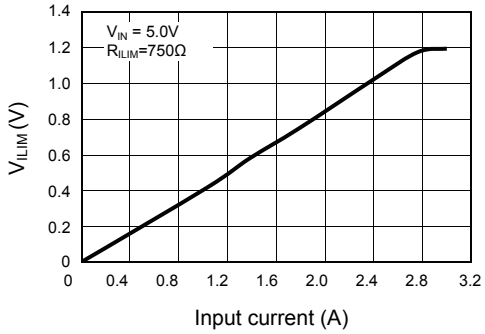

Figure 9. V_{ILIM} VS. input current

Battery Fast Charge Current

Battery fast charge current is set by a resistor connected from ICST pin to AGND as shown in Figure 10. Figure 11 gives out different fast charge current with various R_{ICST}. The battery fast charge current is estimated as the following equation:

$$Ic(A) = 1.25(A) \times \frac{R_{ICST}(k\Omega)}{Rcs(m\Omega)} \quad (4)$$

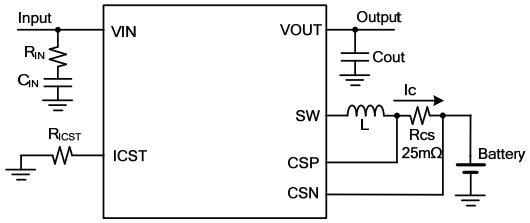

Figure 10. Battery fast charge current setting

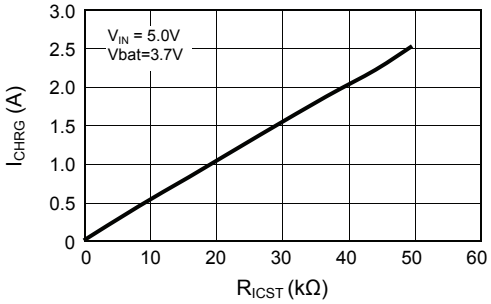

Figure 11. Battery fast charge current setting

Boost Output Constant Current

Boost output current is set by a resistor connected from IOST pin to AGND as shown in Figure 12. The boost output current is estimated as the following equation:

$$I_{IOST}(A) = \frac{2}{3}(A) \times \frac{R_{IOST}(k\Omega)}{Rcs(m\Omega)} \quad (5)$$

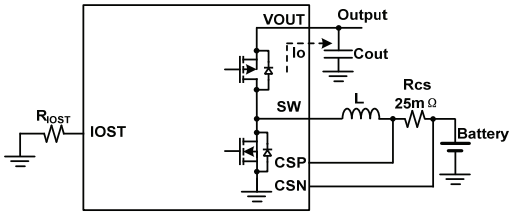

Figure 12. Boost output current setting circuit

Figure 13 gives out boost output current with various R_{IOST}.

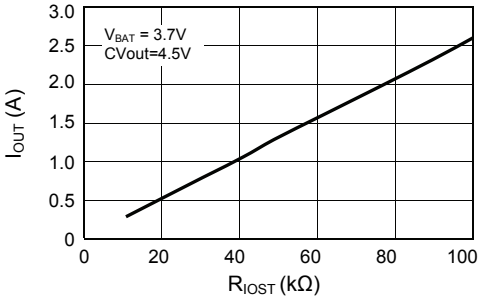

Figure 13. Boost output current setting

The IOST pin voltage is proportional to output current until output current is limited, as shown in Figure 14.

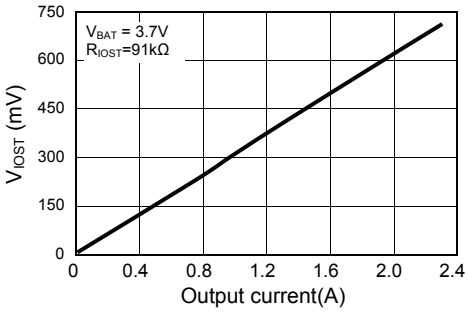

Figure 14. V_{IOST} VS. output current

Copyright © 2016 Active-Semi, Inc.

Battery Impedance Compensation

An external resistor is used to set the impedance from 40mΩ to 500mΩ as shown in Figure 15. RIMC is corresponding to battery impedance. Higher R_{IMC} gives higher compensation voltage which is positively proportional to battery charge/discharge current.

Select R_{IMC} based on battery impedance:

$$R_{IMC}(k\Omega) = \frac{25 \times R\,(m\Omega)}{Rcs\,(m\,\Omega)} \quad (6)$$

$$V_{BAT}(V) = BAT(V) - I_{BAT}(A) \times R(m\Omega) \times 10^{-3} \quad (7)$$

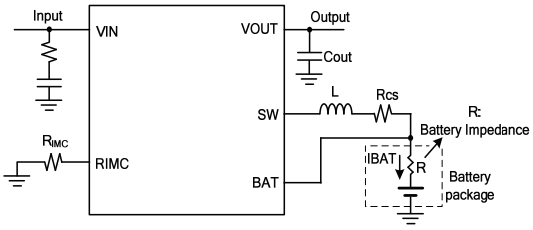

Figure 15. Battery impedance compensation setting circuit

The battery impedance as shown in the table 4 according to the R_{IMC} and Rcs:

Table 4: Battery Impedance

R_{IMC}(KΩ)		50	100	200
Battery Impedance R(mΩ)	Rcs=25mΩ	50	100	200
	Rcs=50mΩ	100	200	400

Input Over Voltage Surge

In the case of pure ceramic input capacitor is chosen, if the input cable is long, stray inductance may cause over voltage spikes as twice as the steady-state voltage when input source is plugged in. Below input circuit is recommended to avoid input voltage surge. R1 resistor is added in series with capacitor C1 to damp the potential LC resonance as shown in Figure 16.

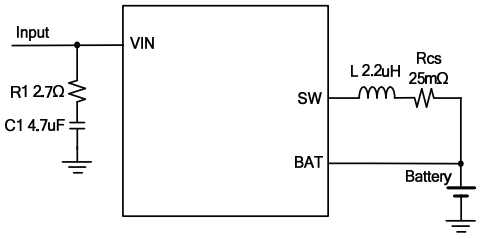

Figure 16. Input over voltage surge protection circuit

Boost Output Plug-in Auto Detection

Figure 17 provides a solution for auto plug-in detection.

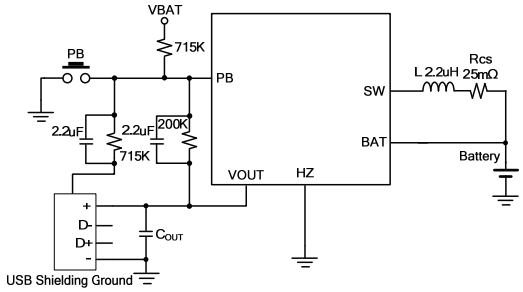

Figure 17. Boost output auto detection circuit

External Input Over Voltage Protection

Considering the maximum voltage rating at VIN pin, the external OVP circuit as shown in Figure 18 is recommended if input voltage may go higher than 7V. With the enhanced OVP circuit, the design can pass UN38.3.

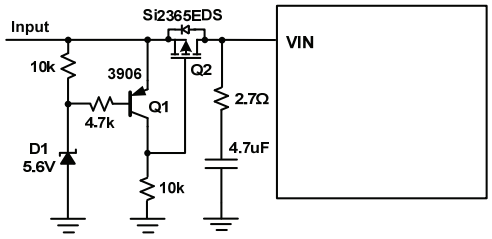

Figure 18. Input over voltage protection

Inductor and Capacitor Selection

ACT2802/ACT2802B/ACT2802C supports SMD components. 2.2uH inductor is recommended. Input side, 4.7uF ceramic capacitor in series with 2.7Ω resistor are recommended, on battery side, 22uF ceramic capacitor is recommended while on output side, 3*22uF ceramic capacitors are recommended.

Battery Temperature Monitoring

ACT2802 continuously monitors the temperature of the battery pack by sensing the resistance of its thermistor, and suspends charging if the temperature of the battery pack exceeds the safety limits.

In a typical application, the TH pin is connected to the battery pack's thermistor input as shown in Figure 19. The ACT2802 injects a 60μA current out of the TH pin into the thermistor, so that the thermistor resistance is monitored by comparing the voltage at TH to the internal V_{THL} and V_{THH} thresholds of 0.3V and 1.5V, respectively. When $V_{TH} > V_{THH}$ or $V_{TH} < V_{THL}$ charging and the charge timers are suspended. When V_{TH} returns to the normal range, charging and the charge timers resume.

The threshold is given by:

Copyright © 2016 Active-Semi, Inc.

$60\mu A \times R_{NOM} \times k_{HOT} = 0.3V \rightarrow R_{NOM} \times k_{HOT} = 5k\Omega$

$60\mu A \times R_{NOM} \times k_{COLD} = 1.5V \rightarrow R_{NOM} \times k_{COLD} = 25k\Omega$

where R_{NOM} is the nominal thermistor resistance at room temperature, and k_{HOT} and k_{COLD} are the ratios of the thermistor's resistance at the desired hot and cold thresholds, respectively.

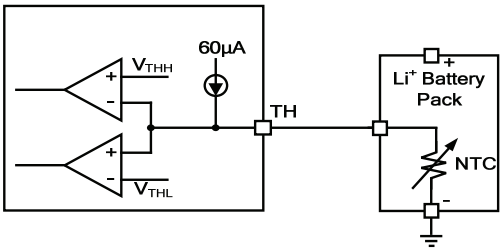

Figure 19. Battery thermal circuit

Copyright © 2016 Active-Semi, Inc.

PC Board Layout Guidance

When laying out the printed circuit board, the following checklist should be used to ensure proper operation of the IC.

1. Arrange the power components to reduce the AC loop size, VIN pin, Vout pin, SW pin and the schottky diode.
2. Place input decoupling ceramic capacitor C3 and R10 as close to VIN pin as possible. Resistor R10 is added in series with capacitor C3 to damp the potential LC resonance .
3. Use copper plane for power GND for best heat dissipation and noise immunity.
4. Place CSP and CSN capacitor C6 (10nF) close to CSP and CSN pin as possible, use Kevin Sense from sense resistor R2 and R2A to CSP and CSN pins. 22uF decoupling capacitor is added close to BAT pin.
5. Place the ceramic capacitor C2 and D1 as close to VOUT and PGND as possible, SW goes under the C2 (recommend C2 to use 1206 size). SW pad is a noisy node switching. It should be isolated away from the rest of circuit for good EMI and low noise operation.
6. Thermal pad is connected to GND layer through vias (recommend 4X4 pins and the aperture is 10mil). Ground plane, PGND and AGND is single point connected under the ACT2802/ ACT2802B/ACT2802C thermal pad through vias to limited SW area.
7. From BAT pin to the Battery positive terminal, need to lay the divided line to ensure the battery voltage accuracy of sampling.
8. RC snubber is recommended to add across SW to PGND to reduce SW spike below 7V. 3A /20V schottky is added to across V_{OUT} and SW pins.

A demo board PCB layout example is shown in the figure 20.

Figure 20.

PCB Layout

Bottom Layer

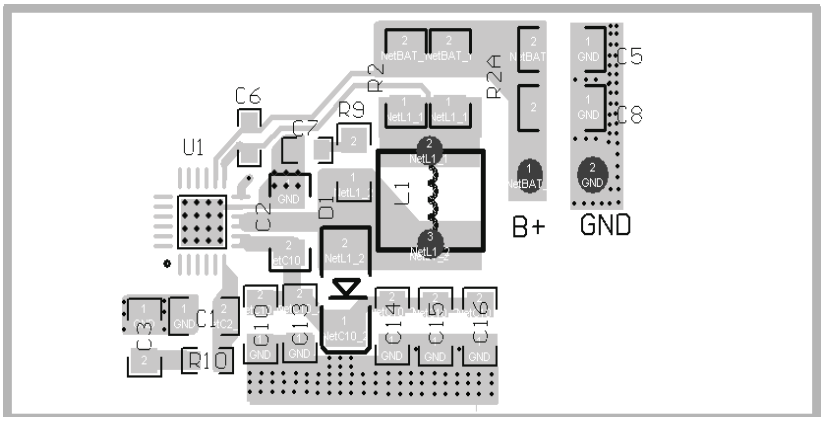

Top Layer

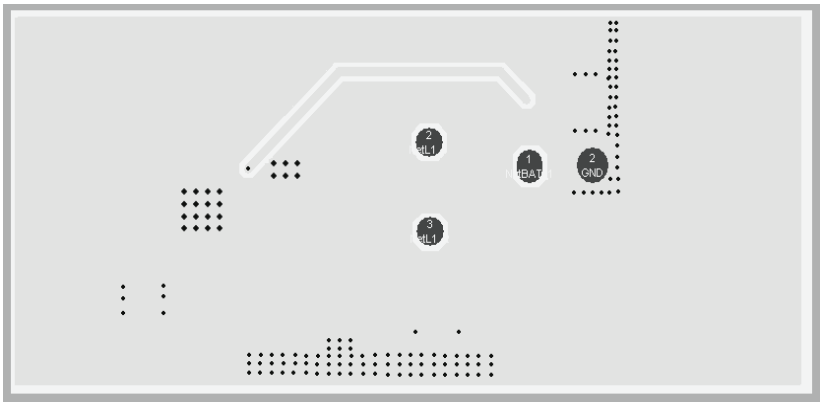

Copyright © 2016 Active-Semi, Inc.

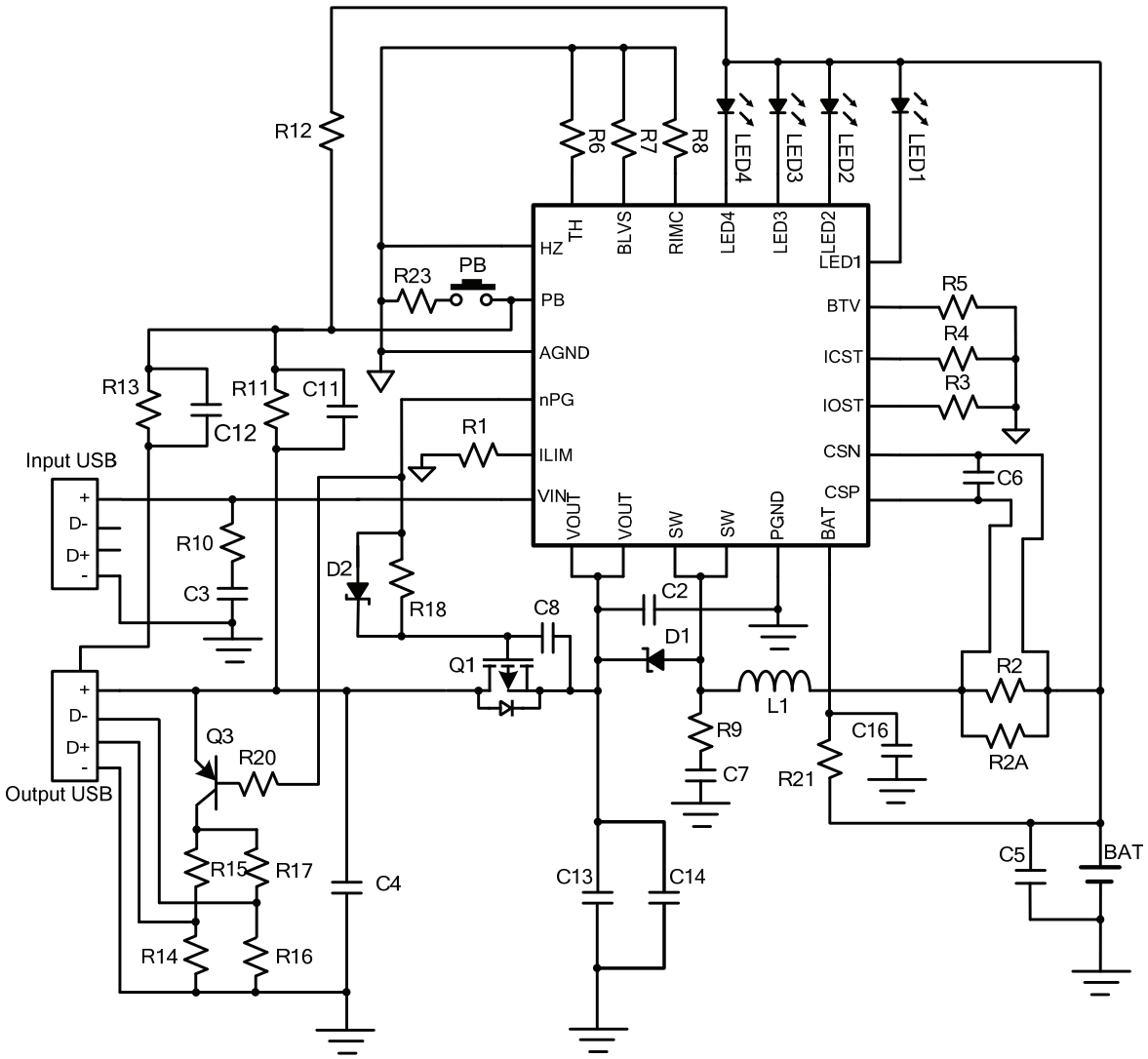

Figure 21. ACT2802 typical application circuit
(Input current limit 3.0A, fast charge current limit 2.1A, boost output constant current limit 2.4A)

Copyright © 2016 Active-Semi, Inc.

Table 5: BOM List

ITEM	REFERENCE	DESCRIPTION	QTY	MANUFACTURER
1	L1	Core 6.5*3*3 Dip 2.2uH 6A	1	Sunlord
2	Q1	AO4503, Rdson=19mΩ at VGS = - 4.5 V	1	AOS
3	Q3	MMBT3906	1	Murata/TDK
4	D1	MBR1020VL, 20V/1A Schottky	1	Diodes
5	D2	1N4148, Vf=0.7V, 75V Schottky	1	Murata/TDK
6	C2,C5,C13,C14	Ceramic capacitor, 22uF/10V, X7R, 1206	4	Murata/TDK
7	C3	Ceramic capacitor, 4.7uF/10V, X7R, 1206	1	Murata/TDK
8	C4	Ceramic capacitor, 0.1uF/10V, X7R, 0603	1	Murata/TDK
9	C6	Ceramic capacitor, 10nF/10V, X7R, 0603	1	Murata/TDK
10	C7	Ceramic capacitor, 4.7nF/10V, X7R, 0603	1	Murata/TDK
11	C8,C11,C12	Ceramic capacitor, 2.2uF/10V, X7R, 0603	3	Murata/TDK
12	C16	Ceramic capacitor, 4.7uF/10V, X7R, 0603	1	Murata/TDK
13	R1	Chip Resistor, 750Ω, 1/10W, 1%, 0603	1	Murata/TDK
14	R2,R2A	Chip Resistor, 50mΩ, 1/4W, 1%, 1206	2	SART
15	R3	Chip Resistor, 93.1kΩ, 1/10W, 1%, 0603	1	Murata/TDK
16	R4,R15	Chip Resistor, 43.2kΩ, 1/10W, 1%, 0603	2	Murata/TDK
17	R5	Chip Resistor, 25kΩ, 1/10W, 1%, 0603	1	Murata/TDK
18	R6	Chip Resistor, 10kΩ, 1/10W, 5%, 0603	1	Murata/TDK
19	R7	Chip Resistor, 60kΩ, 1/10W, 1%, 0603	1	Murata/TDK
20	R8	Chip Resistor, 80kΩ, 1/10W, 1%, 0603	1	Murata/TDK
21	R9	Chip Resistor, 0.47Ω, 1/8W, 5%, 0805	1	Murata/TDK
22	R10	Chip Resistor, 2.7Ω, 1/4W, 5%, 1206	1	Murata/TDK
23	R11	Chip Resistor, 200kΩ, 1/10W, 5%, 0603	1	Murata/TDK
24	R12,R13	Chip Resistor, 715kΩ, 1/10W, 5%, 0603	2	Murata/TDK
25	R14,R16	Chip Resistor, 49.9kΩ, 1/10W, 5%, 0603	2	Murata/TDK
26	R17	Chip Resistor, 75kΩ, 1/10W, 1%, 0603	1	Murata/TDK
27	R18,R20	Chip Resistor, 100kΩ, 1/10W, 5%, 0603	2	Murata/TDK
28	R21	Chip Resistor, 2.2Ω, 1/10W, 5%, 0603	1	Murata/TDK
29	R23	Chip Resistor, 100Ω, 1/10W, 5%, 0603	1	Murata/TDK
30	LED1,LED2, LED3,LED4	LED, 0603, Blue	4	LED Manu
31	PB	Push Button Switch	1	Nikkai Omron
32	USB	10.2*14.6*7mm, 4P	1	
33	Micro-USB	MICRO USB 5P/F SMTB	1	
34	U1	IC, ACT2802QL-T1028, T-QFN 44-24	1	ACT

Copyright © 2016 Active-Semi, Inc.

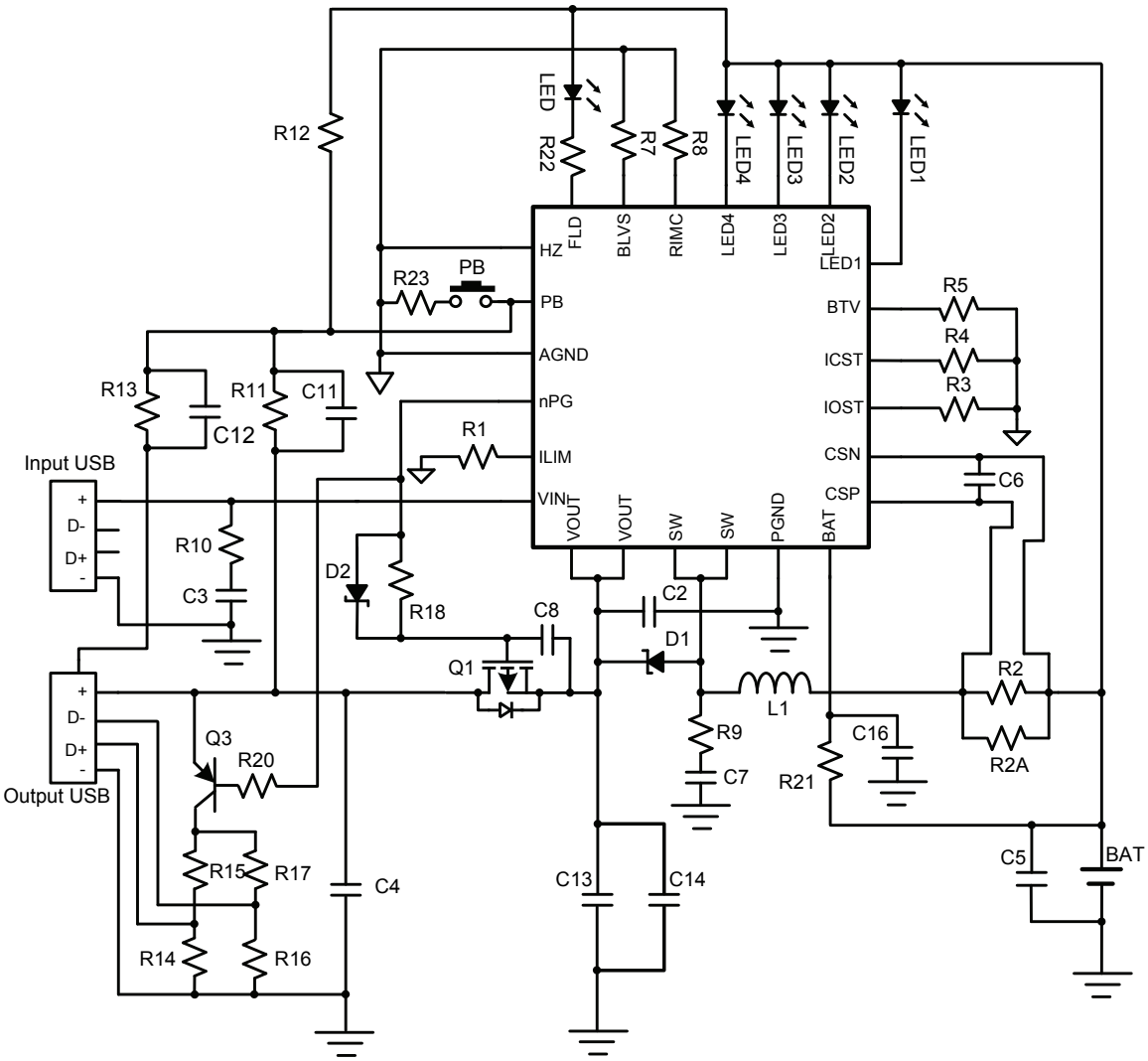

Figure 22. ACT2802B/ACT2802C typical application circuit
(Input current limit 3.0A, fast charge current limit 2.1A, boost output constant current limit 2.4A)

Copyright © 2016 Active-Semi, Inc.

Table 6: BOM List

ITEM	REFERENCE	DESCRIPTION	QTY	MANUFACTURER
1	L1	Core 6.5*3*3 Dip 2.2uH 6A	1	Sunlord
2	Q1	AO4503, Rdson=19mΩ at VGS = - 4.5 V	1	AOS
3	Q3	MMBT3906	1	Murata/TDK
4	D1	MBR1020VL, 20V/1A Schottky	1	Panjit
5	D2	1N4148, Vf=0.7V, 75V Schottky	1	Murata/TDK
6	C2,C5,C13,C14	Ceramic capacitor, 22uF/10V, X7R, 1206	4	Murata/TDK
7	C3	Ceramic capacitor, 4.7uF/10V, X7R, 1206	1	Murata/TDK
8	C4	Ceramic capacitor, 0.1uF/10V, X7R, 0603	1	Murata/TDK
9	C6	Ceramic capacitor, 10nF/10V, X7R, 0603	1	Murata/TDK
10	C7	Ceramic capacitor, 4.7nF/10V, X7R, 0603	1	Murata/TDK
11	C8,C11,C12	Ceramic capacitor, 2.2uF/10V, X7R, 0603	3	Murata/TDK
12	C16	Ceramic capacitor, 4.7uF/10V, X7R, 0603	1	Murata/TDK
13	R1	Chip Resistor, 750Ω, 1/10W, 1%, 0603	1	Murata/TDK
14	R2,R2A	Chip Resistor, 50mΩ, 1/4W, 1%, 1206	2	SART
15	R3	Chip Resistor, 93.1kΩ, 1/10W, 1%, 0603	1	Murata/TDK
16	R4,R15	Chip Resistor, 43.2kΩ, 1/10W, 1%, 0603	2	Murata/TDK
17	R5	Chip Resistor, 25kΩ, 1/10W, 1%, 0603	1	Murata/TDK
18	R7	Chip Resistor, 60kΩ, 1/10W, 1%, 0603	1	Murata/TDK
19	R8	Chip Resistor, 80kΩ, 1/10W, 1%, 0603	1	Murata/TDK
20	R9	Chip Resistor, 0.47Ω, 1/8W, 5%, 0805	1	Murata/TDK
21	R10	Chip Resistor, 2.7Ω, 1/4W, 5%, 1206	1	Murata/TDK
22	R11	Chip Resistor, 200kΩ, 1/10W, 5%, 0603	1	Murata/TDK
23	R12,R13	Chip Resistor, 715kΩ, 1/10W, 5%, 0603	2	Murata/TDK
24	R14,R16	Chip Resistor, 49.9kΩ, 1/10W, 5%, 0603	2	Murata/TDK
25	R17	Chip Resistor, 75kΩ, 1/10W, 1%, 0603	1	Murata/TDK
26	R18,R20	Chip Resistor, 100kΩ, 1/10W, 5%, 0603	2	Murata/TDK
27	R21	Chip Resistor, 2.2Ω, 1/10W, 5%, 0603	1	Murata/TDK
28	R22	Chip Resistor, 51Ω, 1/8W, 5%, 0805	1	Murata/TDK
29	R23	Chip Resistor, 100Ω, 1/10W, 5%, 0603	1	Murata/TDK
30	LED1,LED2, LED3,LED4	LED, 0603, Blue	4	LED Manu
31	LED	Flashlight	1	LED Manu
32	PB	Push Button Switch	1	Nikkai Omron
33	USB	10.2*14.6*7mm, 4P	1	
34	Micro-USB	MICRO USB 5P/F SMTB	1	
35	U1	IC, ACT2802BQL-T1028/ACT2802CQL-T1028, T-QFN 44-24	1	ACT

Copyright © 2016 Active-Semi, Inc.

TYPICAL PERFORMANCE CHARACTERISTICS CONT'D

(Schematic as show in Figure 21, Ta = 25°C, unless otherwise specified)

Charge Current VS. Output Current

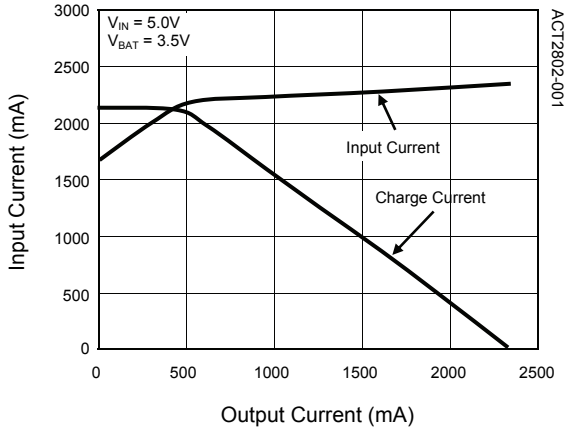

Battery Charge V/I Profile

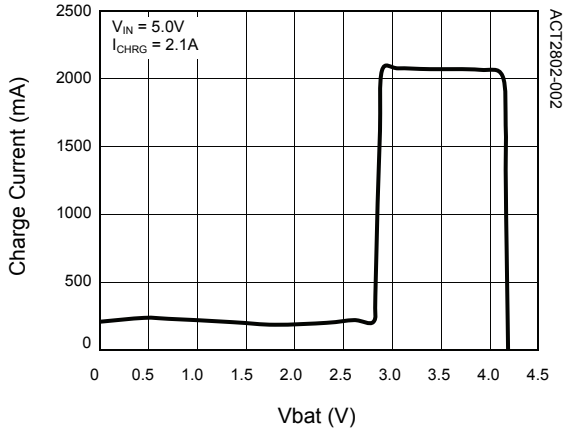

Charge Efficiency

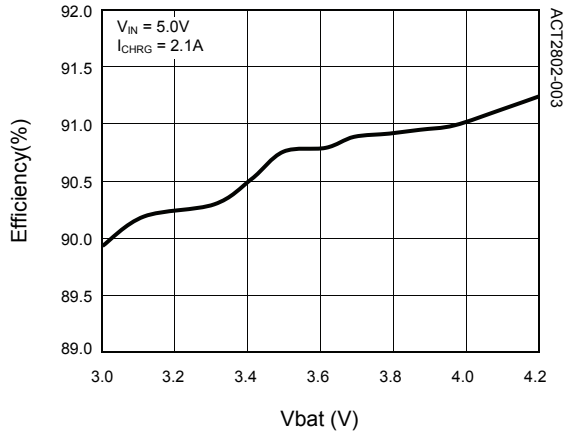

Boost Efficiency

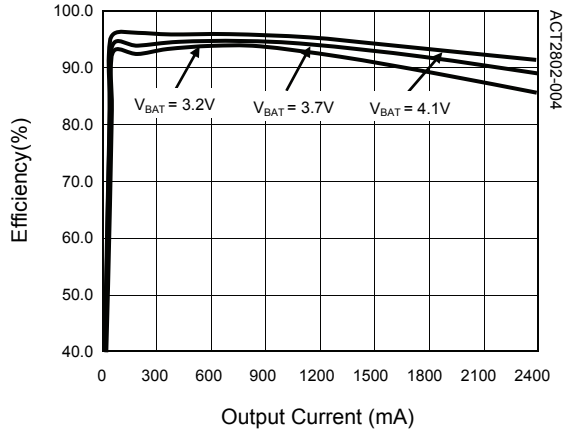

Battery Charge Current VS. Temperature

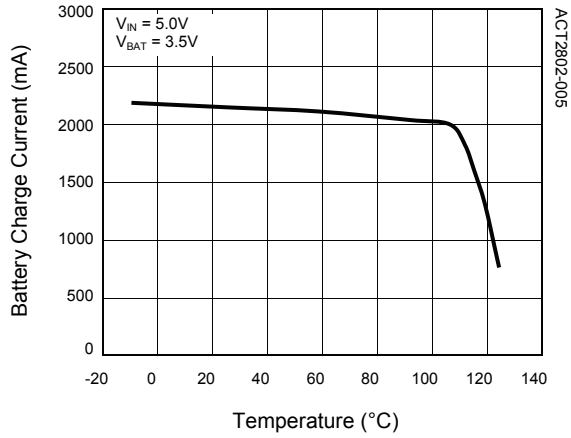

Battery Leakage VS. Temperature (HZ Mode)

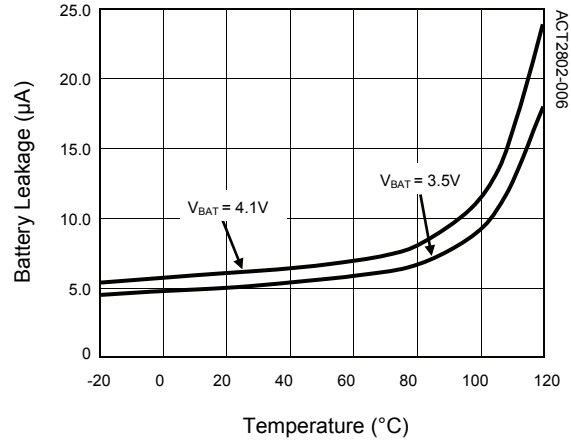

Copyright © 2016 Active-Semi, Inc.

TYPICAL PERFORMANCE CHARACTERISTICS CONT'D

(Schematic as show in Figure 21, Ta = 25°C, unless otherwise specified)

Boost Output Constant Current Limit VS. Temperature

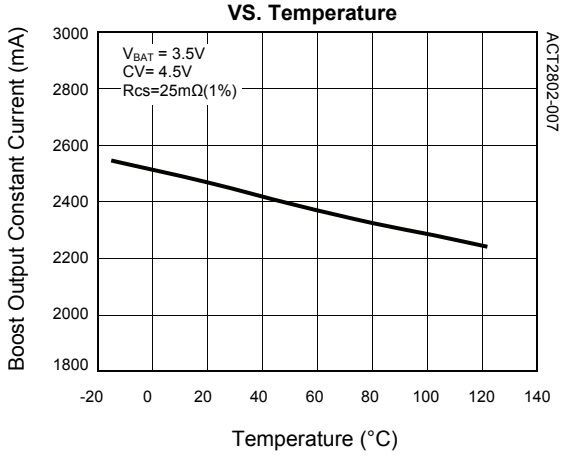

Boost Output Voltage VS. Temperature

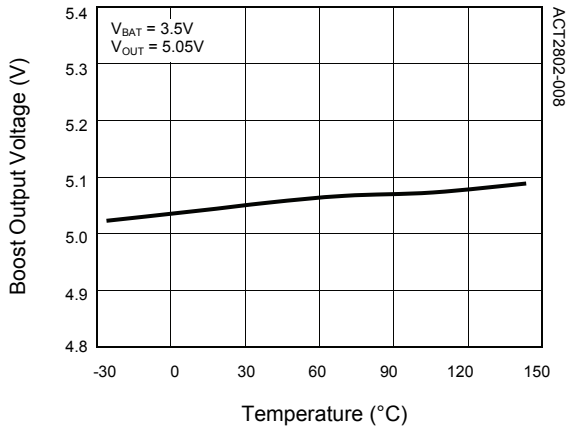

Boost Output Voltage VS. Output Current

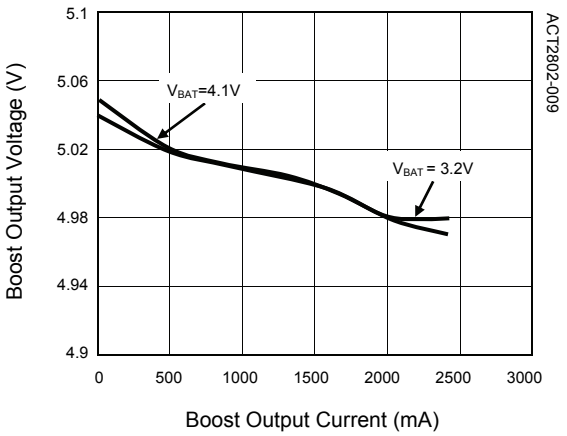

Boost Output Constant Current Limit VS. V_{BAT}

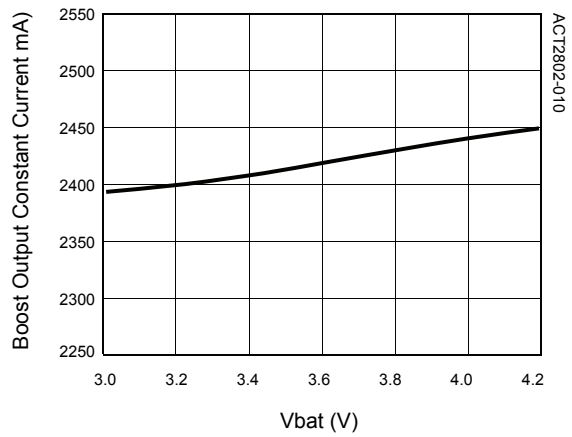

Boost Standby Current VS. Battery Voltage

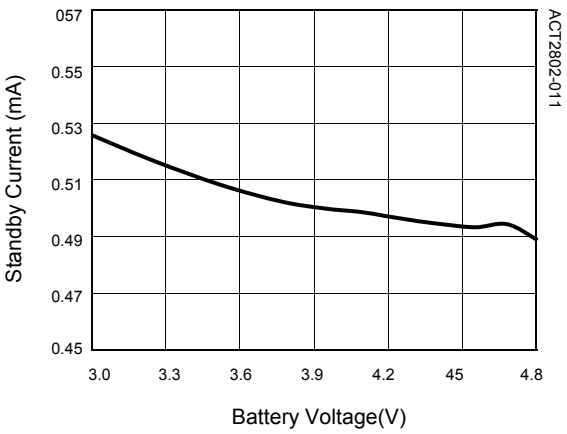

Battery Leakage VS. Battery Voltage (HZ Mode)

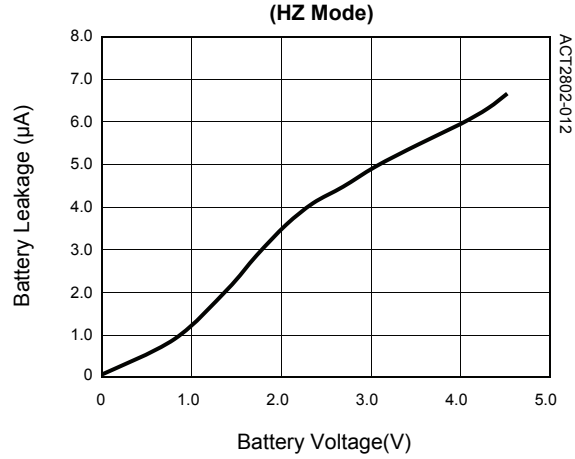

Copyright © 2016 Active-Semi, Inc.

TYPICAL PERFORMANCE CHARACTERISTICS CONT'D

(Schematic as show in Figure 21, Ta = 25°C, unless otherwise specified)

Boost Load Transient (80mA-1A-80mA)

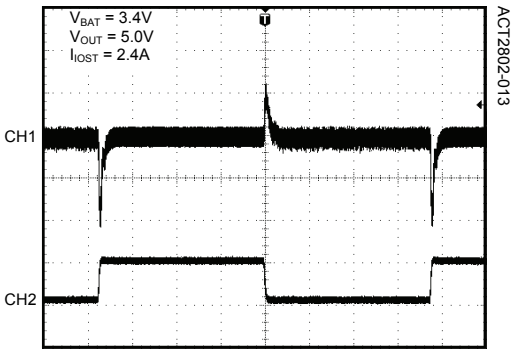

CH1: V_{OUT}, 100mV/div
CH2: I_{OUT}, 1A/div
TIME: 400µs/div

Boost Load Transient (1A-2.1A-1A)

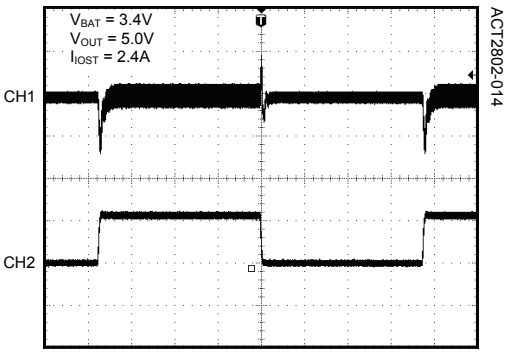

CH1: V_{OUT}, 200mV/div
CH2: I_{OUT}, 1A/div
TIME: 400µs/div

SW and Output Waveforms in Boost Mode

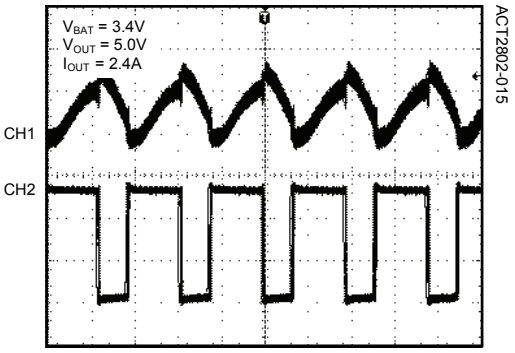

CH1: V_{OUT}, 20mV/div
CH2: V_{SW}, 2V/div
TIME: 1µs/div

SW and Output Waveforms in Boost Mode

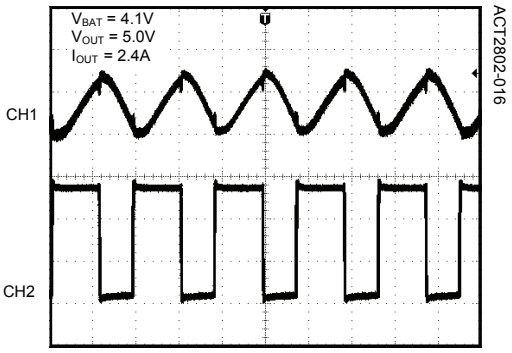

CH1: V_{OUT}, 20mV/div
CH2: V_{SW}, 2V/div
TIME: 1µs/div

Transition Between Buck Mode and Boost Mode

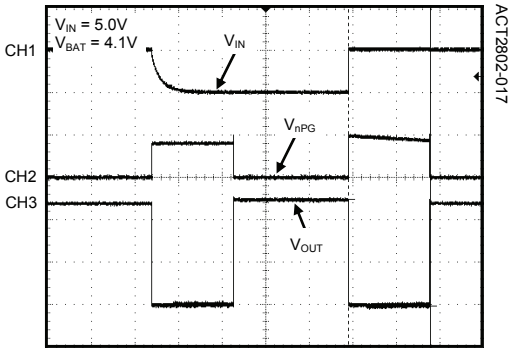

CH1: V_{IN}, 5V/div
CH2: V_{nPG}, 5V/div
CH3: V_{OUT}, 2V/div
TIME: 1s/div

Copyright © 2016 Active-Semi, Inc.

PACKAGE OUTLINE

QFN44-24 PACKAGE OUTLINE AND DIMENSIONS

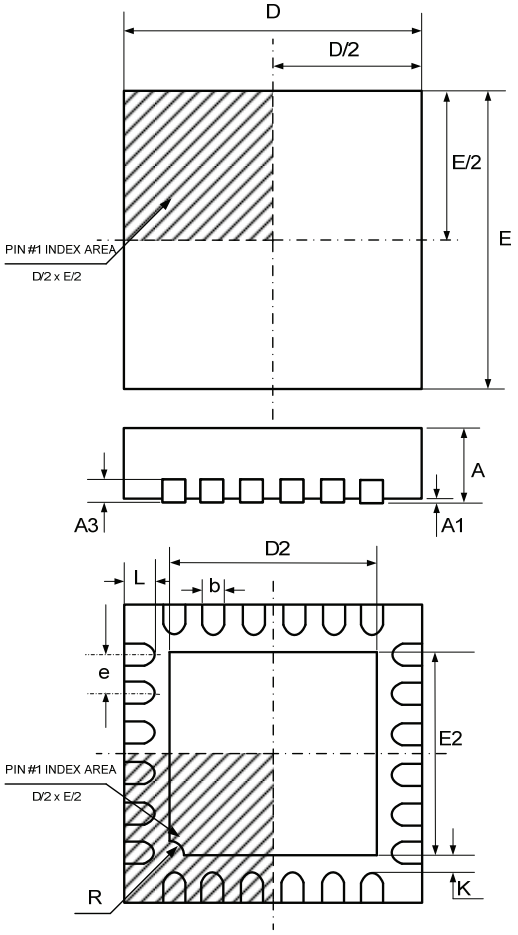

SYMBOL	DIMENSION IN MILLIMETERS		DIMENSION IN INCHES	
	MIN	MAX	MIN	MAX
A	0.700	1.000	0.028	0.040
A1	0.000	0.050	0.000	0.002
A3	0.200 REF		0.008 REF	
b	0.180	0.300	0.007	0.012
D	4.000 BSC		0.160 BSC	
E	4.000 BSC		0.160 BSC	
D2	2.500	2.800	0.098	0.110
E2	2.500	2.800	0.098	0.110
e	0.500 BSC		0.020 BSC	
L	0.350	0.450	0.014	0.018
R	0.200 TYP		0.008 TYP	
K	0.200	---	0.008	---

Active-Semi, Inc. reserves the right to modify the circuitry or specifications without notice. Users should evaluate each product to make sure that it is suitable for their applications. Active-Semi products are not intended or authorized for use as critical components in life-support devices or systems. Active-Semi, Inc. does not assume any liability arising out of the use of any product or circuit described in this datasheet, nor does it convey any patent license.

Active-Semi and its logo are trademarks of Active-Semi, Inc. For more information on this and other products, contact sales@active-semi.com or visit http://www.active-semi.com.

is a registered trademark of Active-Semi.

Copyright © 2016 Active-Semi, Inc.

OCEAN CHIPS
Океан Электроники
Поставка электронных компонентов

Компания «Океан Электроники» предлагает заключение долгосрочных отношений при поставках импортных электронных компонентов на взаимовыгодных условиях!

Наши преимущества:

- Поставка оригинальных импортных электронных компонентов напрямую с производств Америки, Европы и Азии, а так же с крупнейших складов мира;
- Широкая линейка поставок активных и пассивных импортных электронных компонентов (более 30 млн. наименований);
- Поставка сложных, дефицитных, либо снятых с производства позиций;
- Оперативные сроки поставки под заказ (от 5 рабочих дней);
- Экспресс доставка в любую точку России;
- Помощь Конструкторского Отдела и консультации квалифицированных инженеров;
- Техническая поддержка проекта, помощь в подборе аналогов, поставка прототипов;
- Поставка электронных компонентов под контролем ВП;
- Система менеджмента качества сертифицирована по Международному стандарту ISO 9001;
- При необходимости вся продукция военного и аэрокосмического назначения проходит испытания и сертификацию в лаборатории (по согласованию с заказчиком);
- Поставка специализированных компонентов военного и аэрокосмического уровня качества (Xilinx, Altera, Analog Devices, Intersil, Interpoint, Microsemi, Actel, Aeroflex, Peregrine, VPT, Syfer, Eurofarad, Texas Instruments, MS Kennedy, Miteq, Cobham, E2V, MA-COM, Hittite, Mini-Circuits, General Dynamics и др.);

Компания «Океан Электроники» является официальным дистрибьютором и эксклюзивным представителем в России одного из крупнейших производителей разъемов военного и аэрокосмического назначения **«JONHON»**, а так же официальным дистрибьютором и эксклюзивным представителем в России производителя высокотехнологичных и надежных решений для передачи СВЧ сигналов **«FORSTAR»**.

AVIC JONHON

«JONHON» (основан в 1970 г.)

Разъемы специального, военного и аэрокосмического назначения:

(Применяются в военной, авиационной, аэрокосмической, морской, железнодорожной, горно- и нефтедобывающей отраслях промышленности)

«FORSTAR» (основан в 1998 г.)

ВЧ соединители, коаксиальные кабели, кабельные сборки и микроволновые компоненты:

(Применяются в телекоммуникациях гражданского и специального назначения, в средствах связи, РЛС, а так же военной, авиационной и аэрокосмической отраслях промышленности).

FORSTAR®

Телефон: 8 (812) 309-75-97 (многоканальный)
Факс: 8 (812) 320-03-32
Электронная почта: ocean@oceanchips.ru
Web: http://oceanchips.ru/
Адрес: 198099, г. Санкт-Петербург, ул. Калинина, д. 2, корп. 4, лит. А