dsPIC30F1010/202X

28/44-Pin dsPIC30F1010/202X Enhanced Flash SMPS 16-Bit Digital Signal Controller

Note: This data sheet summarizes features of this group of dsPIC30F devices and is not intended to be a complete reference source. For more information on the CPU, peripherals, register descriptions and general device functionality, refer to the "*dsPIC30F Family Reference Manual*" (DS70046). For more information on the device instruction set and programming, refer to the *"dsPIC30F/33F Programmer's Reference Manual"* (DS70157).

High-Performance Modified RISC CPU:

- Modified Harvard architecture
- C compiler optimized instruction set architecture
- 83 base instructions with flexible addressing modes
- 24-bit wide instructions, 16-bit wide data path
- 12 Kbytes on-chip Flash program space
- 512 bytes on-chip data RAM
- 16 x 16-bit working register array
- Up to 30 MIPS operation:
  - Dual Internal RC
    - 9.7 and 14.55 MHz (±1%) Industrial Temp
    - 6.4 and 9.7 MHz (±1%) Extended Temp
  - 32X PLL with 480 MHz VCO
  - PLL inputs ±3%
  - External EC clock 6.0 to 14.55 MHz
  - HS Crystal mode 6.0 to 14.55 MHz
- 32 interrupt sources
- Three external interrupt sources
- 8 user-selectable priority levels for each interrupt
- 4 processor exceptions and software traps

DSP Engine Features:

- Modulo and Bit-Reversed modes
- Two 40-bit wide accumulators with optional saturation logic
- 17-bit x 17-bit single-cycle hardware fractional/integer multiplier
- Single-cycle Multiply-Accumulate (MAC) operation
- 40-stage Barrel Shifter
- Dual data fetch

Peripheral Features:

- High-current sink/source I/O pins: 25 mA/25 mA
- Three 16-bit timers/counters; optionally pair up 16-bit timers into 32-bit timer modules
- One 16-bit Capture input functions
- Two 16-bit Compare/PWM output functions
  - Dual Compare mode available
- 3-wire SPI modules (supports 4 Frame modes)
- I^2C™ module supports Multi-Master/Slave mode and 7-bit/10-bit addressing
- UART Module:
  - Supports RS-232, RS-485 and LIN 1.2
  - Supports IrDA® with on-chip hardware endec
  - Auto wake-up on Start bit
  - Auto-Baud Detect
  - 4-level FIFO buffer

Power Supply PWM Module Features:

- Four PWM generators with 8 outputs
- Each PWM generator has independent time base and duty cycle
- Duty cycle resolution of 1.1 ns at 30 MIPS
- Individual dead time for each PWM generator:
  - Dead-time resolution 4.2 ns at 30 MIPS
  - Dead time for rising and falling edges
- Phase-shift resolution of 4.2 ns @ 30 MIPS
- Frequency resolution of 8.4 ns @ 30 MIPS
- PWM modes supported:
  - Complementary
  - Push-Pull
  - Multi-Phase
  - Variable Phase
  - Current Reset
  - Current-Limit
- Independent Current-Limit and Fault Inputs
- Output Override Control
- Special Event Trigger
- PWM generated ADC Trigger

© 2006-2014 Microchip Technology Inc.

Analog Features:

ADC

- 10-bit resolution
- 2000 Ksps conversion rate
- Up to 12 input channels
- “Conversion pairing” allows simultaneous conversion of two inputs (i.e., current and voltage) with a single trigger
- PWM control loop:
  - Up to six conversion pairs available
  - Each conversion pair has up to four PWM and seven other selectable trigger sources
- Interrupt hardware supports up to 1M interrupts per second

COMPARATOR

- Four Analog Comparators:
  - 20 ns response time
  - 10-bit DAC reference generator
  - Programmable output polarity
  - Selectable input source
  - ADC sample and convert capable
- PWM module interface
  - PWM Duty Cycle Control
  - PWM Period Control
  - PWM Fault Detect
- Special Event Trigger
- PWM-generated ADC Trigger

Special Microcontroller Features:

- Enhanced Flash program memory:
  - 10,000 erase/write cycle (min.) for industrial temperature range, 100k (typical)
- Self-reprogrammable under software control
- Power-on Reset (POR), Power-up Timer (PWRT) and Oscillator Start-up Timer (OST)
- Flexible Watchdog Timer (WDT) with on-chip low power RC oscillator for reliable operation
- Fail-Safe clock monitor operation
- Detects clock failure and switches to on-chip low power RC oscillator
- Programmable code protection
- In-Circuit Serial Programming™ (ICSP™)
- Selectable Power Management modes
  - Sleep, Idle and Alternate Clock modes

CMOS Technology:

- Low-power, high-speed Flash technology
- 3.3V and 5.0V operation (±10%)
- Industrial and Extended temperature ranges
- Low power consumption

dsPIC30F SWITCH MODE POWER SUPPLY FAMILY

Product	Pins	Packaging	Program Memory (Bytes)	Data SRAM (Bytes)	Timers	Capture	Compare	UART	SPI	I^2C™	PWM	ADCs	S & H	A/D Inputs	Analog Comparators	GPIO
dsPIC30F1010	28	SDIP	6K	256	2	0	1	1	1	1	2x2	1	3	6 ch	2	21
dsPIC30F1010	28	SOIC	6K	256	2	0	1	1	1	1	2x2	1	3	6 ch	2	21
dsPIC30F1010	28	QFN-S	6K	256	2	0	1	1	1	1	2x2	1	3	6 ch	2	21
dsPIC30F2020	28	SDIP	12K	512	3	1	2	1	1	1	4x2	1	5	8 ch	4	21
dsPIC30F2020	28	SOIC	12K	512	3	1	2	1	1	1	4x2	1	5	8 ch	4	21
dsPIC30F2020	28	QFN-S	12K	512	3	1	2	1	1	1	4x2	1	5	8 ch	4	21
dsPIC30F2023	44	QFN	12K	512	3	1	2	1	1	1	4x2	1	5	12 ch	4	35
dsPIC30F2023	44	TQFP	12K	512	3	1	2	1	1	1	4x2	1	5	12 ch	4	35

© 2006-2014 Microchip Technology Inc.

Pin Diagrams

28-Pin SDIP and SOIC

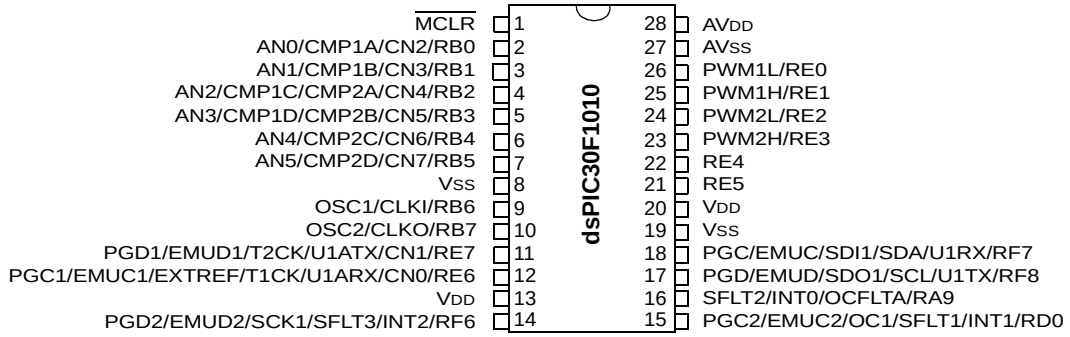

28-Pin QFN-S

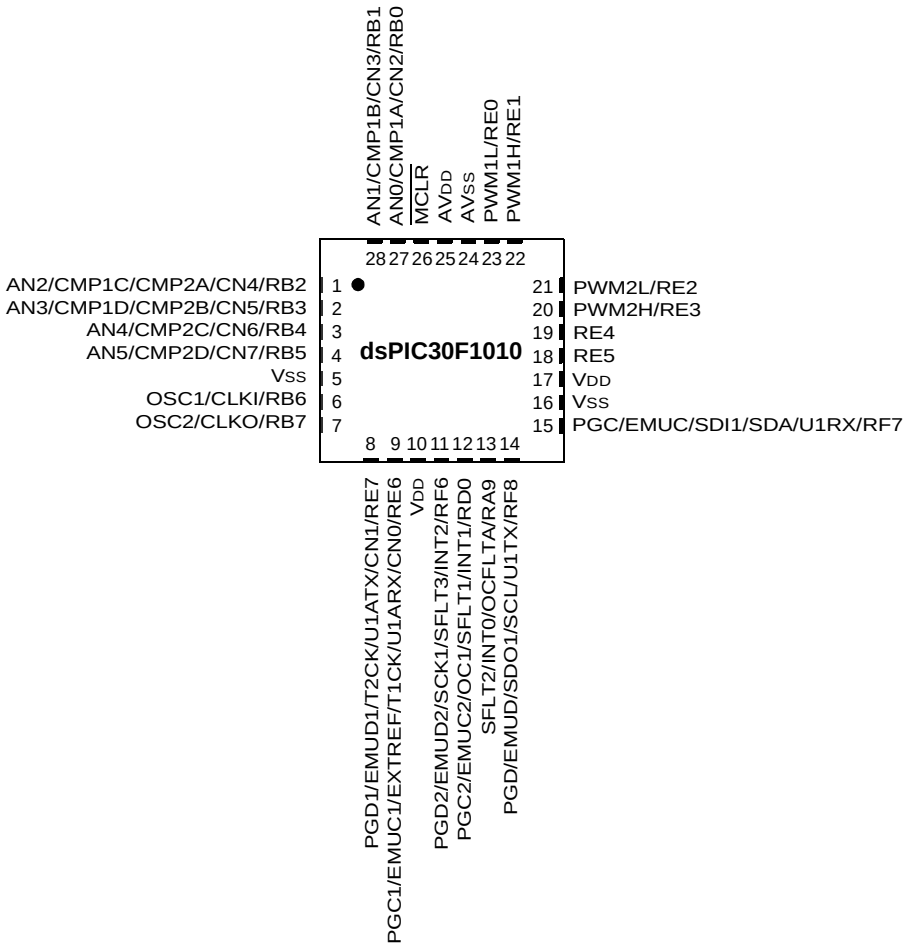

Pin Diagrams

28-Pin SDIP and SOIC

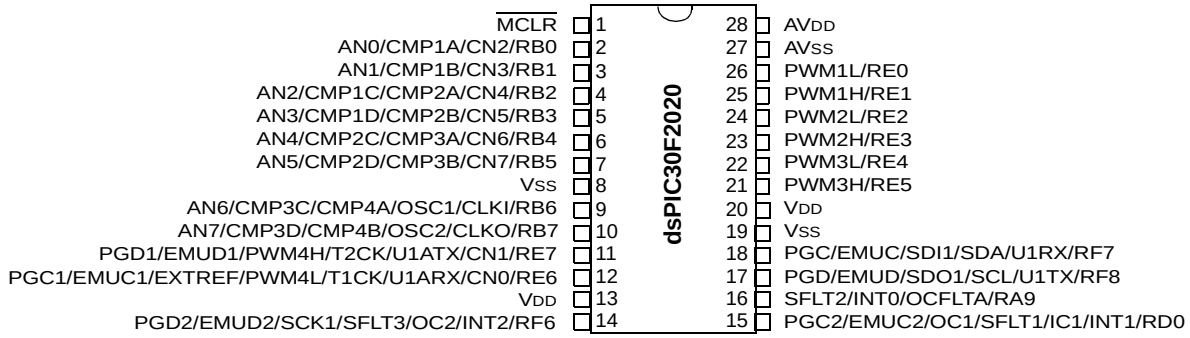

28-Pin QFN-S

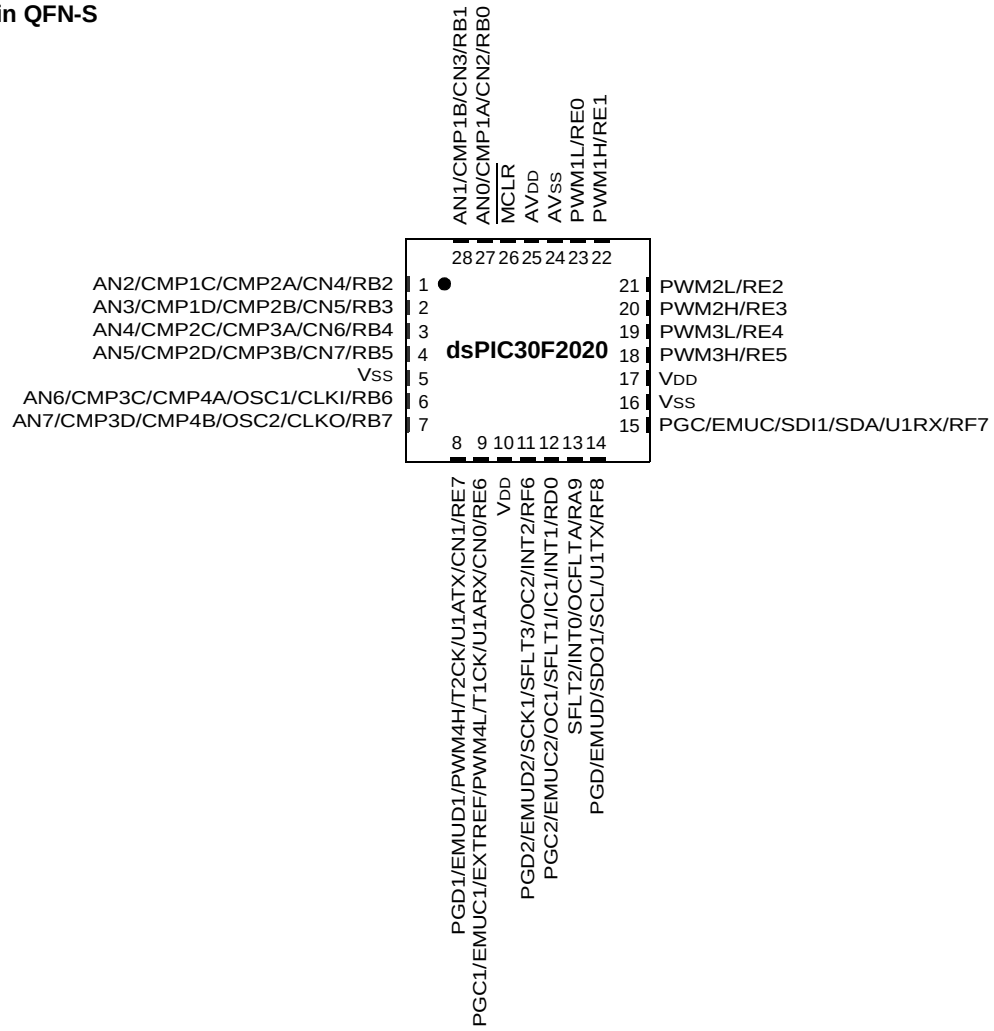

© 2006-2014 Microchip Technology Inc.

Pin Diagrams

44-PIN QFN

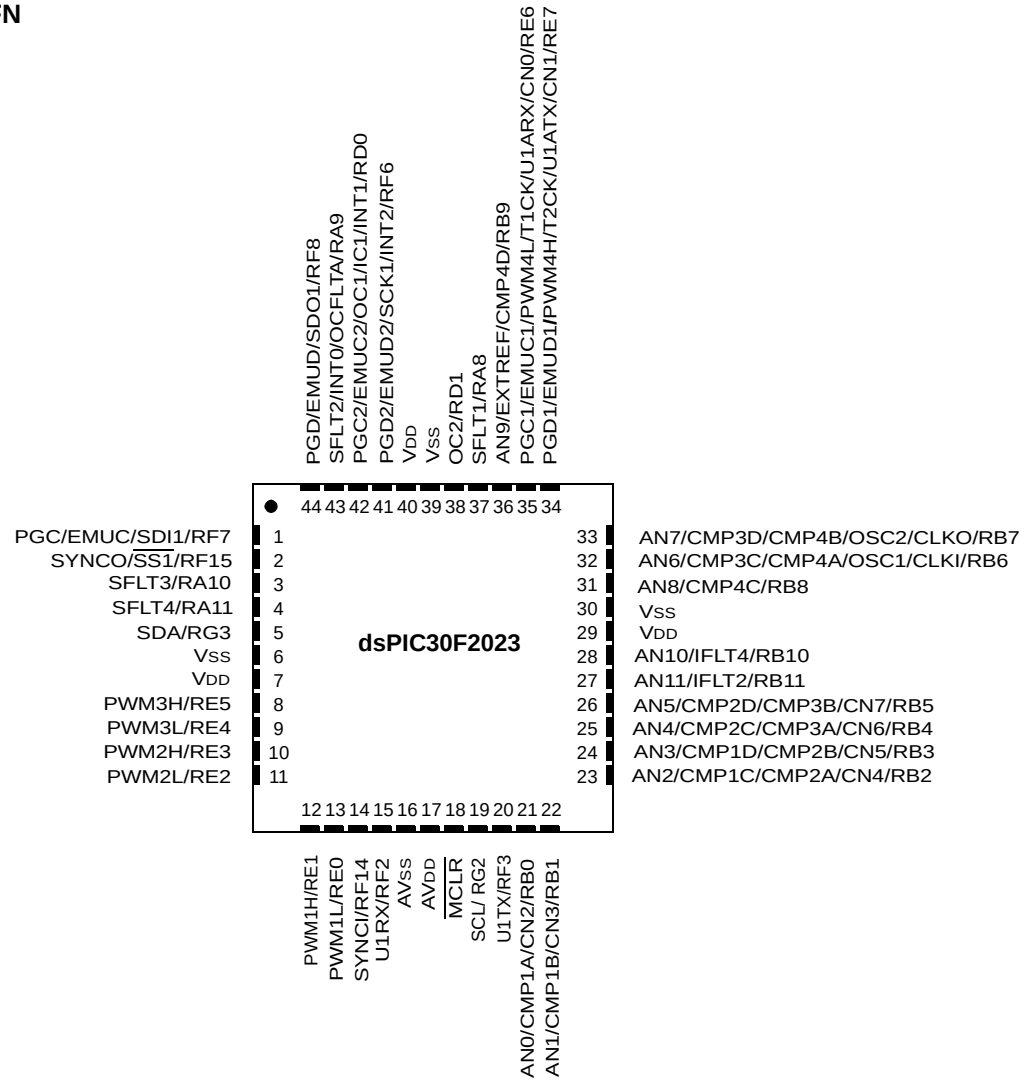

Pin Diagrams

44-Pin TQFP

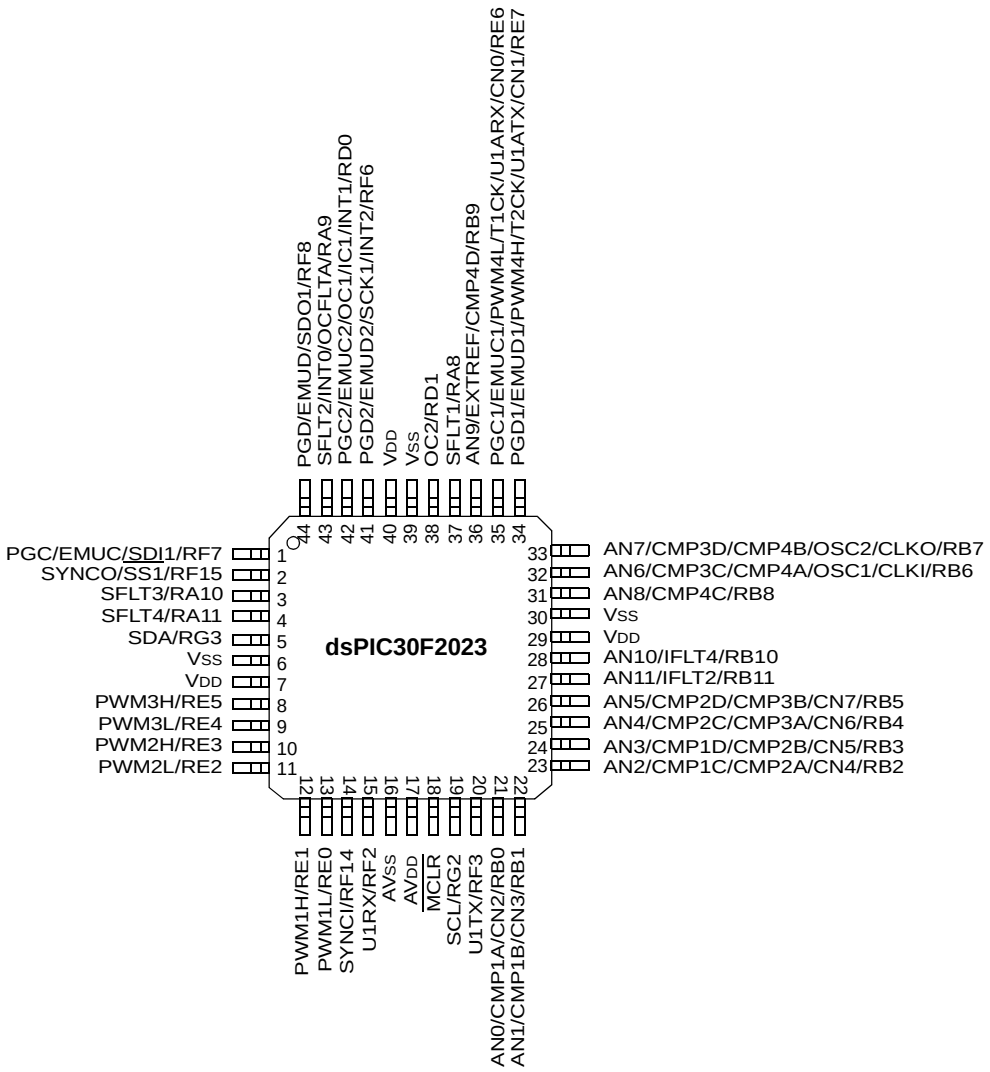

© 2006-2014 Microchip Technology Inc.

Table of Contents

1.0 Device Overview 9
2.0 CPU Architecture Overview 19
3.0 Memory Organization 29
4.0 Address Generator Units 41
5.0 Interrupts 47
6.0 I/O Ports 77
7.0 Flash Program Memory 81
8.0 Timer1 Module 87
9.0 Timer2/3 Module 91
10.0 Input Capture Module 97
11.0 Output Compare Module 101
12.0 Power Supply PWM 107
13.0 Serial Peripheral Interface (SPI) 145
14.0 I2C™ Module 153
15.0 Universal Asynchronous Receiver Transmitter (UART) Module 161
16.0 10-bit 2 Msps Analog-to-Digital Converter (ADC) Module 169
17.0 SMPS Comparator Module 191
18.0 System Integration 197
19.0 Instruction Set Summary 219
20.0 Development Support 227
21.0 Electrical Characteristics 231
22.0 Package Marking Information 267
Appendix A: Revision History 275
Index 277

TO OUR VALUED CUSTOMERS

It is our intention to provide our valued customers with the best documentation possible to ensure successful use of your Microchip products. To this end, we will continue to improve our publications to better suit your needs. Our publications will be refined and enhanced as new volumes and updates are introduced.

If you have any questions or comments regarding this publication, please contact the Marketing Communications Department via E-mail at **docerrors@microchip.com**. We welcome your feedback.

Most Current Data Sheet

To obtain the most up-to-date version of this data sheet, please register at our Worldwide Web site at:

http://www.microchip.com

You can determine the version of a data sheet by examining its literature number found on the bottom outside corner of any page. The last character of the literature number is the version number, (e.g., DS30000000A is version A of document DS30000000).

Errata

An errata sheet, describing minor operational differences from the data sheet and recommended workarounds, may exist for current devices. As device/documentation issues become known to us, we will publish an errata sheet. The errata will specify the revision of silicon and revision of document to which it applies.

To determine if an errata sheet exists for a particular device, please check with one of the following:

- Microchip's Worldwide Web site; **http://www.microchip.com**
- Your local Microchip sales office (see last page)

When contacting a sales office, please specify which device, revision of silicon and data sheet (include literature number) you are using.

Customer Notification System

Register on our web site at **www.microchip.com** to receive the most current information on all of our products.

© 2006-2014 Microchip Technology Inc.

1.0 DEVICE OVERVIEW

Note: This data sheet summarizes features of this group of dsPIC30F devices and is not intended to be a complete reference source. For more information on the CPU, peripherals, register descriptions and general device functionality, refer to the "*dsPIC30F Family Reference Manual*" (DS70046). For more information on the device instruction set and programming, refer to the "*dsPIC30F/33F Programmer's Reference Manual*" (DS70157).

This document contains device specific information for the dsPIC30F1010/202X SMPS devices. These devices contain extensive Digital Signal Processor (DSP) functionality within a high-performance 16-bit microcontroller (MCU) architecture, as reflected in the following block diagrams. Figure 1-1 and Table 1-1 describe the dsPIC30F1010 SMPS device, Figure 1-2 and Table 1-2 describe the dsPIC30F2020 device and Figure 1-3 and Table 1-3 describe the dsPIC30F2023 SMPS device.

FIGURE 1-1: dsPIC30F1010 BLOCK DIAGRAM

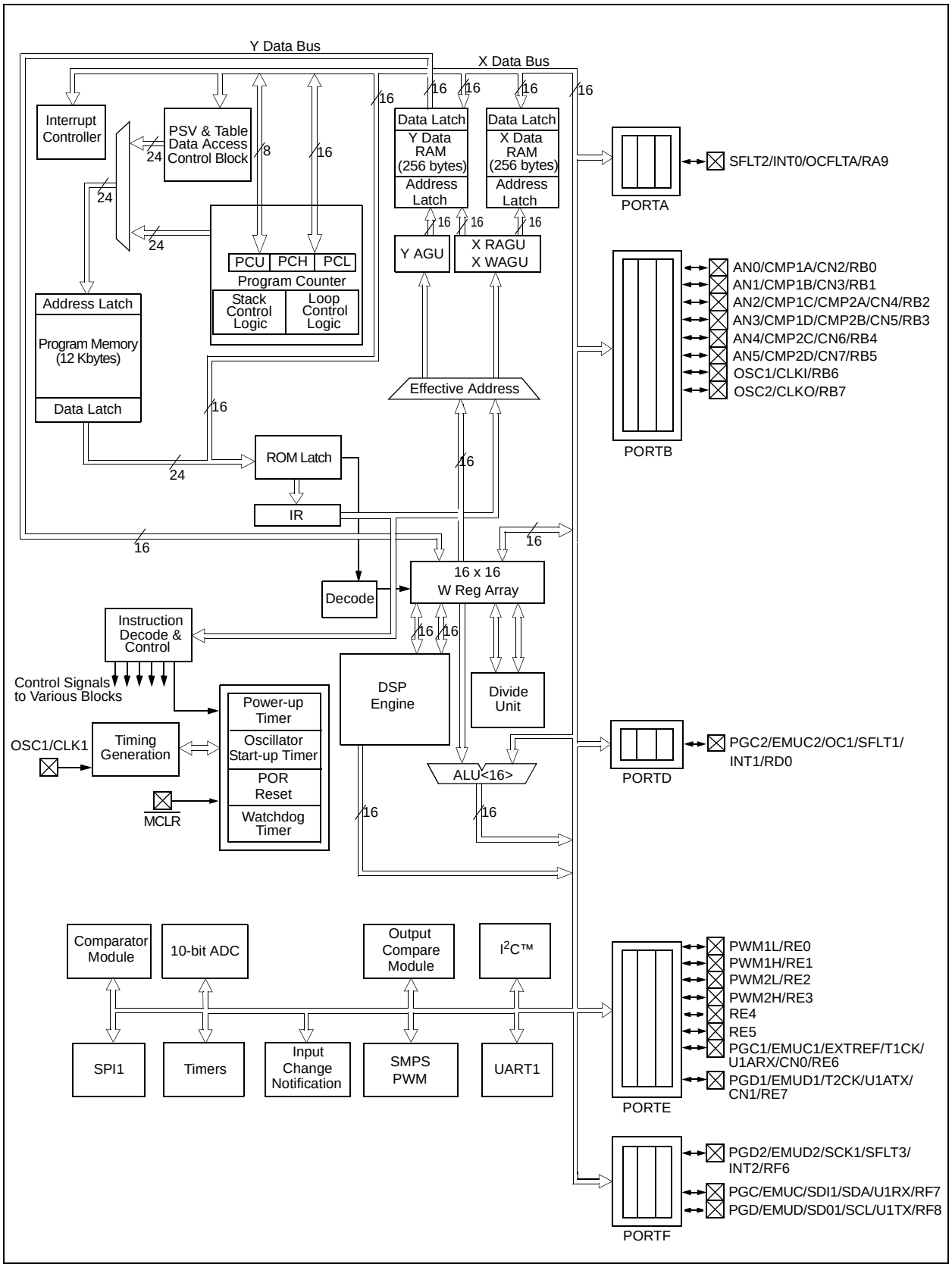

© 2006-2014 Microchip Technology Inc.

Table 1-1 provides a brief description of device I/O pinouts for the dsPIC30F1010 and the functions that may be multiplexed to a port pin. Multiple functions may exist on one port pin. When multiplexing occurs, the peripheral module's functional requirements may force an override of the data direction of the port pin.

TABLE 1-1: PINOUT I/O DESCRIPTIONS FOR dsPIC30F1010

Pin Name	Pin Type	Buffer Type	Description
AN0-AN5	I	Analog	Analog input channels.
AV_{DD}	P	P	Positive supply for analog module.
AV_{SS}	P	P	Ground reference for analog module.
CLKI CLKO	I O	ST/CMOS —	External clock source input. Always associated with OSC1 pin function. Oscillator crystal output. Connects to crystal or resonator in Crystal Oscillator mode. Optionally functions as CLKO in RC and EC modes. Always associated with OSC2 pin function.
EMUD EMUC EMUD1 EMUC1 EMUD2 EMUC2	I/O I/O I/O I/O I/O I/O	ST ST ST ST ST ST	ICD Primary Communication Channel data input/output pin. ICD Primary Communication Channel clock input/output pin. ICD Secondary Communication Channel data input/output pin. ICD Secondary Communication Channel clock input/output pin. ICD Tertiary Communication Channel data input/output pin. ICD Tertiary Communication Channel clock input/output pin.
INT0 INT1 INT2	I I I	ST ST ST	External interrupt 0 External interrupt 1 External interrupt 2
SFLT1 SFLT2 SFLT3 PWM1L PWM1H PWM2L PWM2H	I I I O O O O	ST ST ST — — — —	Shared Fault Pin 1 Shared Fault Pin 2 Shared Fault Pin 3 PWM 1 Low output PWM 1 High output PWM 2 Low output PWM 2 High output
$\overline{MCLR}$	I/P	ST	Master Clear (Reset) input or programming voltage input. This pin is an active low Reset to the device.
OC1	O	—	Compare outputs.
OCFLTA	I	ST	Output Compare Fault Pin
OSC1 OSC2	I I/O	CMOS —	Oscillator crystal input. Oscillator crystal output. Connects to crystal or resonator in Crystal Oscillator mode. Optionally functions as CLKO in FRC and EC modes.
PGD PGC PGD1 PGC1 PGD2 PGC2	I/O I I/O I I/0 I	ST ST ST ST ST ST	In-Circuit Serial Programming™ data input/output pin. In-Circuit Serial Programming clock input pin. In-Circuit Serial Programming data input/output pin 1. In-Circuit Serial Programming clock input pin 1. In-Circuit Serial Programming data input/output pin 2. In-Circuit Serial Programming clock input pin 2.
RB0-RB7	I/O	ST	PORTB is a bidirectional I/O port.
RA9	I/O	ST	PORTA is a bidirectional I/O port.
RD0	I/O	ST	PORTD is a bidirectional I/O port.

Legend:						
	CMOS	=	CMOS compatible input or output	Analog	=	Analog input
	ST	=	Schmitt Trigger input with CMOS levels	O	=	Output
	I	=	Input	P	=	Power

TABLE 1-1: PINOUT I/O DESCRIPTIONS FOR dsPIC30F1010 (CONTINUED)

Pin Name	Pin Type	Buffer Type	Description
RE0-RE7	I/O	ST	PORTE is a bidirectional I/O port.
RF6, RF7, RF8	I/O	ST	PORTF is a bidirectional I/O port.
SCK1 SDI1 SDO1	I/O I O	ST ST —	Synchronous serial clock input/output for SPI #1. SPI #1 Data In. SPI #1 Data Out.
SCL SDA	I/O I/O	ST ST	Synchronous serial clock input/output for I^2C™. Synchronous serial data input/output for I^2C.
T1CK T2CK	I I	ST ST	Timer1 external clock input. Timer2 external clock input.
U1RX U1TX U1ARX U1ATX	I O I O	ST — ST —	UART1 Receive. UART1 Transmit. Alternate UART1 Receive. Alternate UART1 Transmit.
CMP1A CMP1B CMP1C CMP1D CMP2A CMP2B CMP2C CMP2D	I I I I I I I I	Analog Analog Analog Analog Analog Analog Analog Analog	Comparator 1 Channel A Comparator 1 Channel B Comparator 1 Channel C Comparator 1 Channel D Comparator 2 Channel A Comparator 2 Channel B Comparator 2 Channel C Comparator 2 Channel D
CN0-CN7	I	ST	Input Change notification inputs Can be software programmed for internal weak pull-ups on all inputs.
V_{DD}	P	—	Positive supply for logic and I/O pins.
V_{SS}	P	—	Ground reference for logic and I/O pins.
EXTREF	I	Analog	External reference to Comparator DAC

Legend: CMOS = CMOS compatible input or output; Analog = Analog input; ST = Schmitt Trigger input with CMOS levels; O = Output; I = Input; P = Power

© 2006-2014 Microchip Technology Inc.

FIGURE 1-2: dsPIC30F2020 BLOCK DIAGRAM

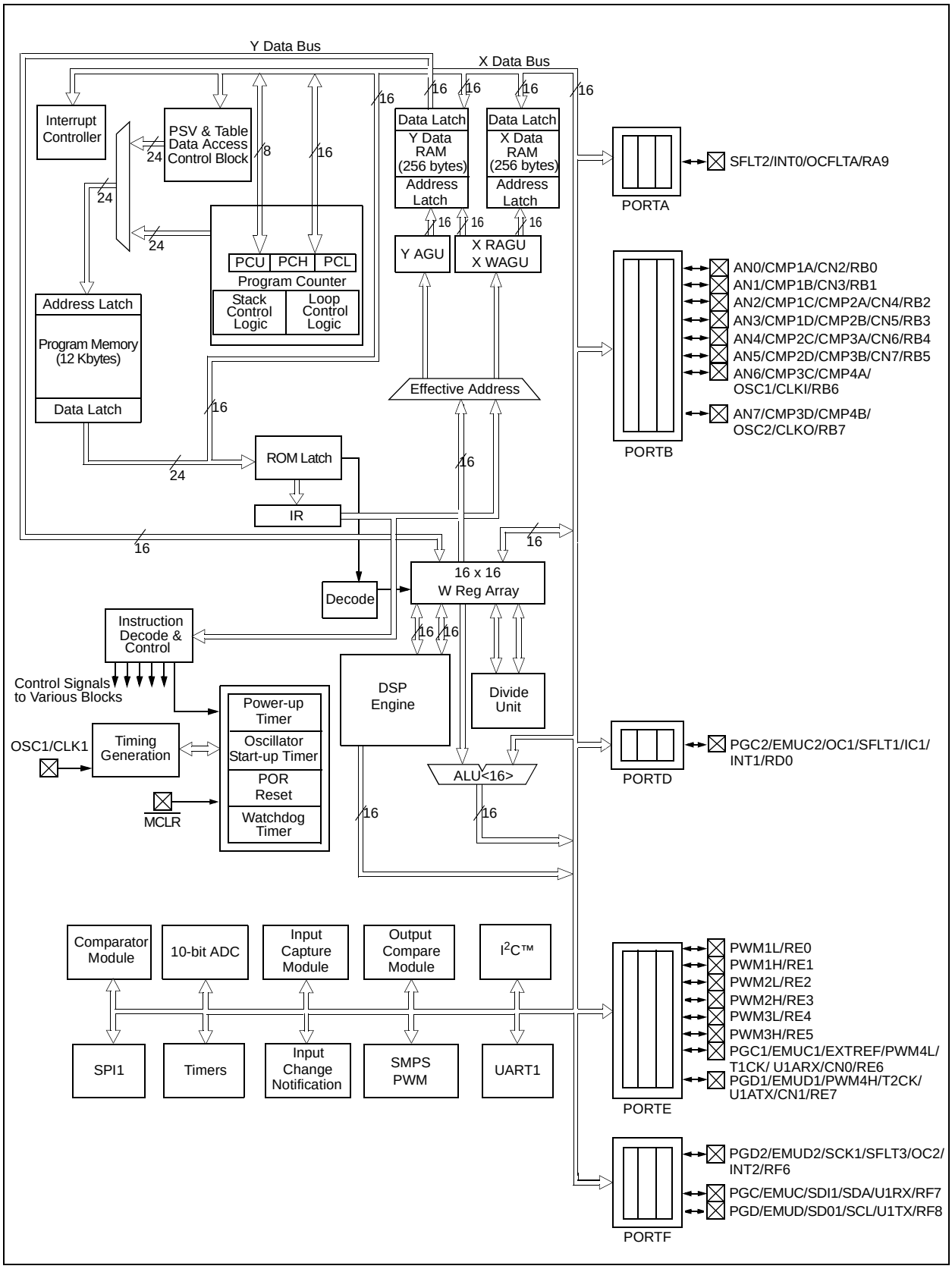

Table 1-2 provides a brief description of device I/O pin-outs for the dsPIC30F2020 and the functions that may be multiplexed to a port pin. Multiple functions may exist on one port pin. When multiplexing occurs, the peripheral module's functional requirements may force an override of the data direction of the port pin.

TABLE 1-2: PINOUT I/O DESCRIPTIONS FOR dsPIC30F2020

Pin Name	Pin Type	Buffer Type	Description
AN0-AN7	I	Analog	Analog input channels.
AV_{DD}	P	P	Positive supply for analog module.
AV_{SS}	P	P	Ground reference for analog module.
CLKI CLKO	I O	ST/CMOS —	External clock source input. Always associated with OSC1 pin function. Oscillator crystal output. Connects to crystal or resonator in Crystal Oscillator mode. Optionally functions as CLKO in RC and EC modes. Always associated with OSC2 pin function.
EMUD EMUC EMUD1 EMUC1 EMUD2 EMUC2	I/O I/O I/O I/O I/O I/O	ST ST ST ST ST ST	ICD Primary Communication Channel data input/output pin. ICD Primary Communication Channel clock input/output pin. ICD Secondary Communication Channel data input/output pin. ICD Secondary Communication Channel clock input/output pin. ICD Tertiary Communication Channel data input/output pin. ICD Tertiary Communication Channel clock input/output pin.
IC1	I	ST	Capture input.
INT0 INT1 INT2	I I I	ST ST ST	External interrupt 0 External interrupt 1 External interrupt 2
SFLT1 SFLT2 SFLT3 PWM1L PWM1H PWM2L PWM2H PWM3L PWM3H PWM4L PWM4H	I I I O O O O O O O O	ST ST ST — — — — — — — —	Shared Fault Pin 1 Shared Fault Pin 2 Shared Fault Pin 3 PWM 1 Low output PWM 1 High output PWM 2 Low output PWM 2 High output PWM 3 Low output PWM 3 High output PWM 4 Low output PWM 4 High output
$\overline{MCLR}$	I/P	ST	Master Clear (Reset) input or programming voltage input. This pin is an active low Reset to the device.
OC1-OC2 OCFLTA	O I	—	Compare outputs. Output Compare Fault pin
OSC1 OSC2	I I/O	CMOS —	Oscillator crystal input. Oscillator crystal output. Connects to crystal or resonator in Crystal Oscillator mode. Optionally functions as CLKO in FRC and EC modes.
PGD PGC PGD1 PGC1 PGD2 PGC2	I/O I I/O I I/O I	ST ST ST ST ST ST	In-Circuit Serial Programming™ data input/output pin. In-Circuit Serial Programming clock input pin. In-Circuit Serial Programming data input/output pin 1. In-Circuit Serial Programming clock input pin 1. In-Circuit Serial Programming data input/output pin 2. In-Circuit Serial Programming clock input pin 2.

Legend: CMOS = CMOS compatible input or output; ST = Schmitt Trigger input with CMOS levels; I = Input; Analog = Analog input; O = Output; P = Power

© 2006-2014 Microchip Technology Inc.

TABLE 1-2: PINOUT I/O DESCRIPTIONS FOR dsPIC30F2020 (CONTINUED)

Pin Name	Pin Type	Buffer Type	Description
RB0-RB7	I/O	ST	PORTB is a bidirectional I/O port.
RA9	I/O	ST	PORTA is a bidirectional I/O port.
RD0	I/O	ST	PORTD is a bidirectional I/O port.
RE0-RE7	I/O	ST	PORTE is a bidirectional I/O port.
RF6, RF7, RF8	I/O	ST	PORTF is a bidirectional I/O port.
SCK1 SDI1 SDO1	I/O I O	ST ST —	Synchronous serial clock input/output for SPI #1. SPI #1 Data In. SPI #1 Data Out.
SCL SDA	I/O I/O	ST ST	Synchronous serial clock input/output for I^2C™. Synchronous serial data input/output for I^2C.
T1CK T2CK	I I	ST ST	Timer1 external clock input. Timer2 external clock input.
U1RX U1TX U1ARX U1ATX	I O I O	ST — ST O	UART1 Receive. UART1 Transmit. Alternate UART1 Receive. Alternate UART1 Transmit.
CMP1A CMP1B CMP1C CMP1D CMP2A CMP2B CMP2C CMP2D CMP3A CMP3B CMP3C CMP3D CMP4A CMP4B	I I I I I I I I I I I I I I	Analog Analog Analog Analog Analog Analog Analog Analog Analog Analog Analog Analog Analog Analog	Comparator 1 Channel A Comparator 1 Channel B Comparator 1 Channel C Comparator 1 Channel D Comparator 2 Channel A Comparator 2 Channel B Comparator 2 Channel C Comparator 2 Channel D Comparator 3 Channel A Comparator 3 Channel B Comparator 3 Channel C Comparator 3 Channel D Comparator 4 Channel A Comparator 4 Channel B
CN0-CN7	I	ST	Input Change notification inputs Can be software programmed for internal weak pull-ups on all inputs.
VDD	P	—	Positive supply for logic and I/O pins.
VSS	P	—	Ground reference for logic and I/O pins.
EXTREF	I	Analog	External reference to Comparator DAC

Legend: CMOS = CMOS compatible input or output; ST = Schmitt Trigger input with CMOS levels; I = Input; Analog = Analog input; O = Output; P = Power

FIGURE 1-3: dsPIC30F2023 BLOCK DIAGRAM

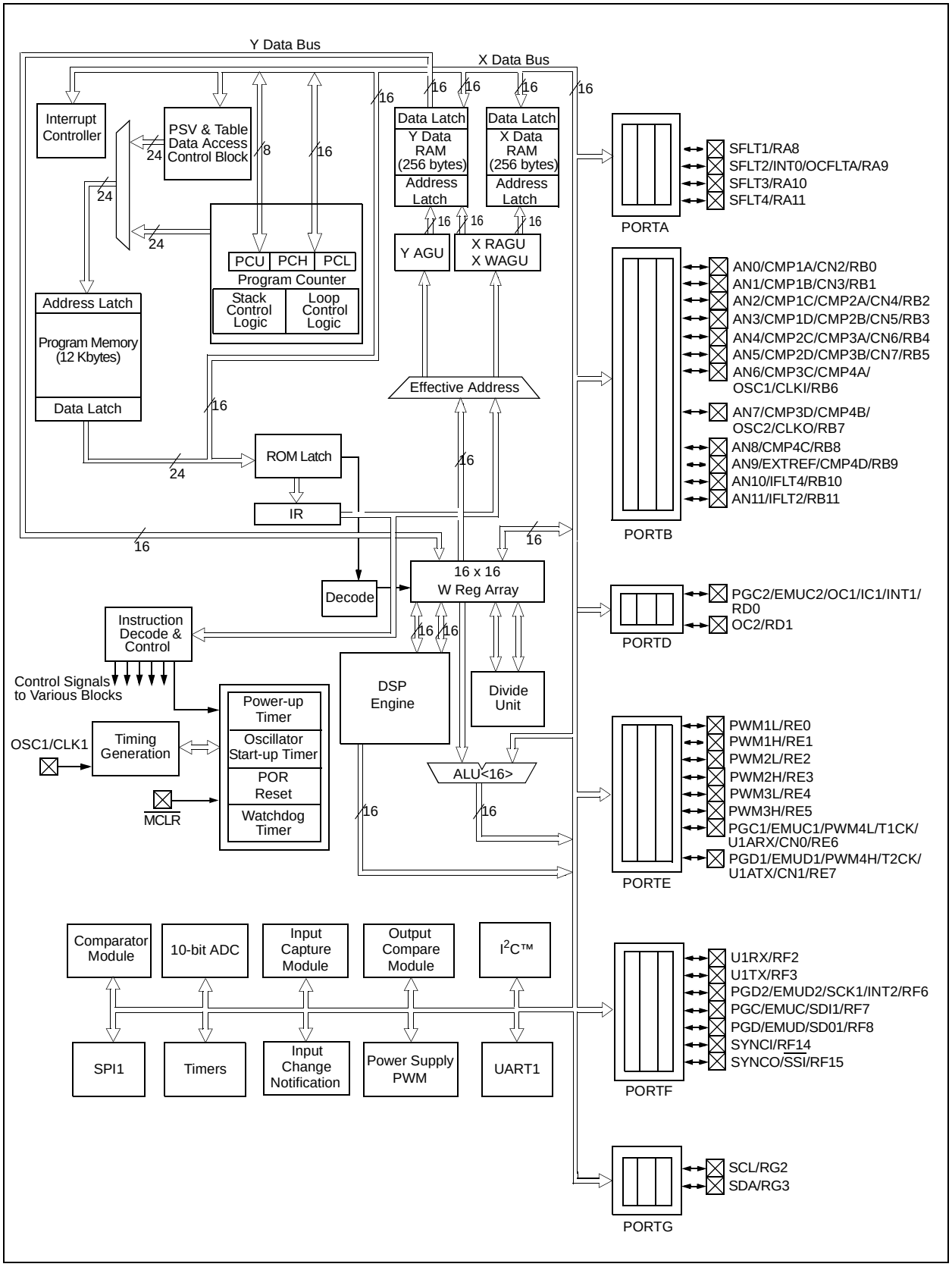

© 2006-2014 Microchip Technology Inc.

Table 1-3 provides a brief description of device I/O pinouts for the dsPIC30F2023 and the functions that may be multiplexed to a port pin. Multiple functions may exist on one port pin. When multiplexing occurs, the peripheral module's functional requirements may force an override of the data direction of the port pin.

TABLE 1-3: PINOUT I/O DESCRIPTIONS FOR dsPIC30F2023

Pin Name	Pin Type	Buffer Type	Description
AN0-AN11	I	Analog	Analog input channels.
AV_{DD}	P	P	Positive supply for analog module.
AV_{SS}	P	P	Ground reference for analog module.
CLKI CLKO	I O	ST/CMOS —	External clock source input. Always associated with OSC1 pin function. Oscillator crystal output. Connects to crystal or resonator in Crystal Oscillator mode. Optionally functions as CLKO in RC and EC modes. Always associated with OSC2 pin function.
EMUD EMUC EMUD1 EMUC1 EMUD2 EMUC2	I/O I/O I/O I/O I/O I/O	ST ST ST ST ST ST	ICD Primary Communication Channel data input/output pin. ICD Primary Communication Channel clock input/output pin. ICD Secondary Communication Channel data input/output pin. ICD Secondary Communication Channel clock input/output pin. ICD Tertiary Communication Channel data input/output pin. ICD Tertiary Communication Channel clock input/output pin.
IC1	I	ST	Capture input.
INT0 INT1 INT2	I I I	ST ST ST	External interrupt 0 External interrupt 1 External interrupt 2
SFLT1 SFLT2 SFLT3 SFLT4 IFLT2 IFLT4 PWM1L PWM1H PWM2L PWM2H PWM3L PWM3H PWM4L PWM4H	I I I I I I O O O O O O O O	ST ST ST ST ST ST — — — — — — — —	Shared Fault 1 Shared Fault 2 Shared Fault 3 Shared Fault 4 Independent Fault 2 Independent Fault 4 PWM 1 Low output PWM 1 High output PWM 2 Low output PWM 2 High output PWM 3 Low output PWM 3 High output PWM 4 Low output PWM 4 High output
SYNCO SYNCI	O I	— ST	PWM SYNC output PWM SYNC input
$\overline{MCLR}$	I/P	ST	Master Clear (Reset) input or programming voltage input. This pin is an active low Reset to the device.
OC1-OC2 OCFLTA	O I	— ST	Compare outputs. Output Compare Fault condition.
OSC1 OSC2	I I/O	CMOS —	Oscillator crystal input. Oscillator crystal output. Connects to crystal or resonator in Crystal Oscillator mode. Optionally functions as CLKO in FRC and EC modes.

Legend: CMOS = CMOS compatible input or output; ST = Schmitt Trigger input with CMOS levels; I = Input; Analog = Analog input; O = Output; P = Power

TABLE 1-3: PINOUT I/O DESCRIPTIONS FOR dsPIC30F2023 (CONTINUED)

Pin Name	Pin Type	Buffer Type	Description
PGD	I/O	ST	In-Circuit Serial Programming™ data input/output pin.
PGC	I	ST	In-Circuit Serial Programming clock input pin.
PGD1	I/O	ST	In-Circuit Serial Programming data input/output pin 1.
PGC1	I	ST	In-Circuit Serial Programming clock input pin 1.
PGD2	I/O	ST	In-Circuit Serial Programming data input/output pin 2.
PGC2	I	ST	In-Circuit Serial Programming clock input pin 2.
RA8-RA11	I/O	ST	PORTA is a bidirectional I/O port.
RB0-RB11	I/O	ST	PORTB is a bidirectional I/O port.
RD0,RD1	I/O	ST	PORTD is a bidirectional I/O port.
RE0-RE7	I/O	ST	PORTE is a bidirectional I/O port.
RF2, RF3, RF6-RF8, RF14, RF15	I/O	ST	PORTF is a bidirectional I/O port.
RG2, RG3	I/O	ST	PORTG is a bidirectional I/O port.
SCK1	I/O	ST	Synchronous serial clock input/output for SPI #1.
SDI1	I	ST	SPI #1 Data In.
SDO1	O	—	SPI #1 Data Out.
$\overline{SS1}$	I	ST	SPI #1 Slave Synchronization.
SCL	I/O	ST	Synchronous serial clock input/output for I^2C.
SDA	I/O	ST	Synchronous serial data input/output for I^2C.
T1CK	I	ST	Timer1 external clock input.
T2CK	I	ST	Timer2 external clock input.
U1RX	I	ST	UART1 Receive.
U1TX	O	—	UART1 Transmit.
U1ARX	I	ST	Alternate UART1 Receive.
U1ATX	O	—	Alternate UART1 Transmit
CMP1A	I	Analog	Comparator 1 Channel A
CMP1B	I	Analog	Comparator 1 Channel B
CMP1C	I	Analog	Comparator 1 Channel C
CMP1D	I	Analog	Comparator 1 Channel D
CMP2A	I	Analog	Comparator 2 Channel A
CMP2B	I	Analog	Comparator 2 Channel B
CMP2C	I	Analog	Comparator 2 Channel C
CMP2D	I	Analog	Comparator 2 Channel D
CMP3A	I	Analog	Comparator 3 Channel A
CMP3B	I	Analog	Comparator 3 Channel B
CMP3C	I	Analog	Comparator 3 Channel C
CMP3D	I	Analog	Comparator 3 Channel D
CMP4A	I	Analog	Comparator 4 Channel A
CMP4B	I	Analog	Comparator 4 Channel B
CMP4C	I	Analog	Comparator 4 Channel C
CMP4D	I	Analog	Comparator 4 Channel D
CN0-CN7	I	ST	Input Change notification inputs Can be software programmed for internal weak pull-ups on all inputs.
V_{DD}	P	—	Positive supply for logic and I/O pins.
V_{SS}	P	—	Ground reference for logic and I/O pins.
EXTREF	I	Analog	External reference to Comparator DAC

Legend: CMOS = CMOS compatible input or output; Analog = Analog input
ST = Schmitt Trigger input with CMOS levels; O = Output
I = Input; P = Power

© 2006-2014 Microchip Technology Inc.

2.0 CPU ARCHITECTURE OVERVIEW

Note: This data sheet summarizes features of this group of dsPIC30F devices and is not intended to be a complete reference source. For more information on the CPU, peripherals, register descriptions and general device functionality, refer to the "*dsPIC30F Family Reference Manual*" (DS70046). For more information on the device instruction set and programming, refer to the "*dsPIC30F/33F Programmer's Reference Manual*" (DS70157).

2.1 Core Overview

The core has a 24-bit instruction word. The Program Counter (PC) is 23 bits wide with the Least Significant bit (LSb) always clear (see **Section 3.1 "Program Address Space"**), and the Most Significant bit (MSb) is ignored during normal program execution, except for certain specialized instructions. Thus, the PC can address up to 4M instruction words of user program space. An instruction prefetch mechanism is used to help maintain throughput. Program loop constructs, free from loop count management overhead, are supported using the `DO` and `REPEAT` instructions, both of which are interruptible at any point.

The working register array consists of 16x16-bit registers, each of which can act as data, address or offset registers. One working register (W15) operates as a software Stack Pointer for interrupts and calls.

The data space is 64 Kbytes (32K words) and is split into two blocks, referred to as X and Y data memory. Each block has its own independent Address Generation Unit (AGU). Most instructions operate solely through the X memory AGU, which provides the appearance of a single unified data space. The Multiply-Accumulate (`MAC`) class of dual source DSP instructions operate through both the X and Y AGUs, splitting the data address space into two parts (see **Section 3.2 "Data Address Space"**). The X and Y data space boundary is device-specific and cannot be altered by the user. Each data word consists of 2 bytes, and most instructions can address data either as words or bytes.

There are two methods of accessing data stored in program memory:

- The upper 32 Kbytes of data space memory can be mapped into the lower half (user space) of program space at any 16K program word boundary, defined by the 8-bit Program Space Visibility Page (PSVPAG) register. This lets any instruction access program space as if it were data space, with a limitation that the access requires an additional cycle. Moreover, only the lower 16 bits of each instruction word can be accessed using this method.
- Linear indirect access of 32K word pages within program space is also possible using any working register, via table read and write instructions. Table read and write instructions can be used to access all 24 bits of an instruction word.

Overhead-free circular buffers (modulo addressing) are supported in both X and Y address spaces. This is primarily intended to remove the loop overhead for DSP algorithms.

The X AGU also supports Bit-Reversed Addressing mode on destination effective addresses, to greatly simplify input or output data reordering for radix-2 FFT algorithms. Refer to **Section 4.0 "Address Generator Units"** for details on modulo and Bit-Reversed Addressing.

The core supports Inherent (no operand), Relative, Literal, Memory Direct, Register Direct, Register Indirect, Register Offset and Literal Offset Addressing modes. Instructions are associated with predefined Addressing modes, depending upon their functional requirements.

For most instructions, the core is capable of executing a data (or program data) memory read, a working register (data) read, a data memory write and a program (instruction) memory read per instruction cycle. As a result, 3-operand instructions are supported, allowing C = A + B operations to be executed in a single cycle.

A DSP engine has been included to significantly enhance the core arithmetic capability and throughput. It features a high-speed 17-bit by 17-bit multiplier, a 40-bit ALU, two 40-bit saturating accumulators and a 40-bit bidirectional barrel shifter. Data in the accumulator or any working register can be shifted up to 15 bits right or 16 bits left in a single cycle. The DSP instructions operate seamlessly with all other instructions and have been designed for optimal real-time performance. The `MAC` class of instructions can concurrently fetch two data operands from memory, while multiplying two W registers. To enable this concurrent fetching of data operands, the data space has been split for these instructions and linear for all others. This has been achieved in a transparent and flexible manner, by dedicating certain working registers to each address space for the `MAC` class of instructions.

The core does not support a multi-stage instruction pipeline. However, a single stage instruction prefetch mechanism is used, which accesses and partially decodes instructions a cycle ahead of execution, in order to maximize available execution time. Most instructions execute in a single cycle, with certain exceptions.

The core features a vectored exception processing structure for traps and interrupts, with 62 independent vectors. The exceptions consist of up to 8 traps (of which 4 are reserved) and 54 interrupts. Each interrupt is prioritized based on a user-assigned priority between 1 and 7 (1 being the lowest priority and 7 being the highest) in conjunction with a predetermined 'natural order'. Traps have fixed priorities, ranging from 8 to 15.

2.2 Programmer's Model

The programmer's model is shown in Figure 2-1 and consists of 16x16-bit working registers (W0 through W15), 2x40-bit accumulators (ACCA and ACCB), STATUS register (SR), Data Table Page register (TBLPAG), Program Space Visibility Page register (PSVPAG), DO and REPEAT registers (DOSTART, DOEND, DCOUNT and RCOUNT), and Program Counter (PC). The working registers can act as data, address or offset registers. All registers are memory mapped. W0 acts as the W register for file register addressing.

Some of these registers have a shadow register associated with each of them, as shown in Figure 2-1. The shadow register is used as a temporary holding register and can transfer its contents to or from its host register upon the occurrence of an event. None of the shadow registers are accessible directly. The following rules apply for transfer of registers into and out of shadows.

- `PUSH.S` and `POP.S`
  W0, W1, W2, W3, SR (DC, N, OV, Z and C bits only) are transferred.
- `DO` instruction
  DOSTART, DOEND, DCOUNT shadows are pushed on loop start, and popped on loop end.

When a byte operation is performed on a working register, only the Least Significant Byte (LSB) of the target register is affected. However, a benefit of memory mapped working registers is that both the Least and Most Significant Bytes (MSBs) can be manipulated through byte wide data memory space accesses.

2.2.1 SOFTWARE STACK POINTER/ FRAME POINTER

The dsPIC® DSC devices contain a software stack. W15 is the dedicated software Stack Pointer (SP), and will be automatically modified by exception processing and subroutine calls and returns. However, W15 can be referenced by any instruction in the same manner as all other W registers. This simplifies the reading, writing and manipulation of the Stack Pointer (e.g., creating stack frames).

Note:	In order to protect against misaligned stack accesses, W15<0> is always clear.

W15 is initialized to 0x0800 during a Reset. The user may reprogram the SP during initialization to any location within data space.

W14 has been dedicated as a Stack Frame Pointer as defined by the `LNK` and `ULNK` instructions. However, W14 can be referenced by any instruction in the same manner as all other W registers.

2.2.2 STATUS REGISTER

The dsPIC DSC core has a 16-bit STATUS Register (SR), the LSB of which is referred to as the SR Low Byte (SRL) and the MSB as the SR High Byte (SRH). See Figure 2-1 for SR layout.

SRL contains all the MCU ALU operation status flags (including the Z bit), as well as the CPU Interrupt Priority Level Status bits, IPL<2:0>, and the REPEAT active Status bit, RA. During exception processing, SRL is concatenated with the MSB of the PC to form a complete word value, which is then stacked.

The upper byte of the STATUS register contains the DSP Adder/Subtracter status bits, the DO Loop Active bit (DA) and the Digit Carry (DC) Status bit.

2.2.3 PROGRAM COUNTER

The Program Counter is 23 bits wide. Bit 0 is always clear. Therefore, the PC can address up to 4M instruction words.

© 2006-2014 Microchip Technology Inc.

FIGURE 2-1: PROGRAMMER'S MODEL

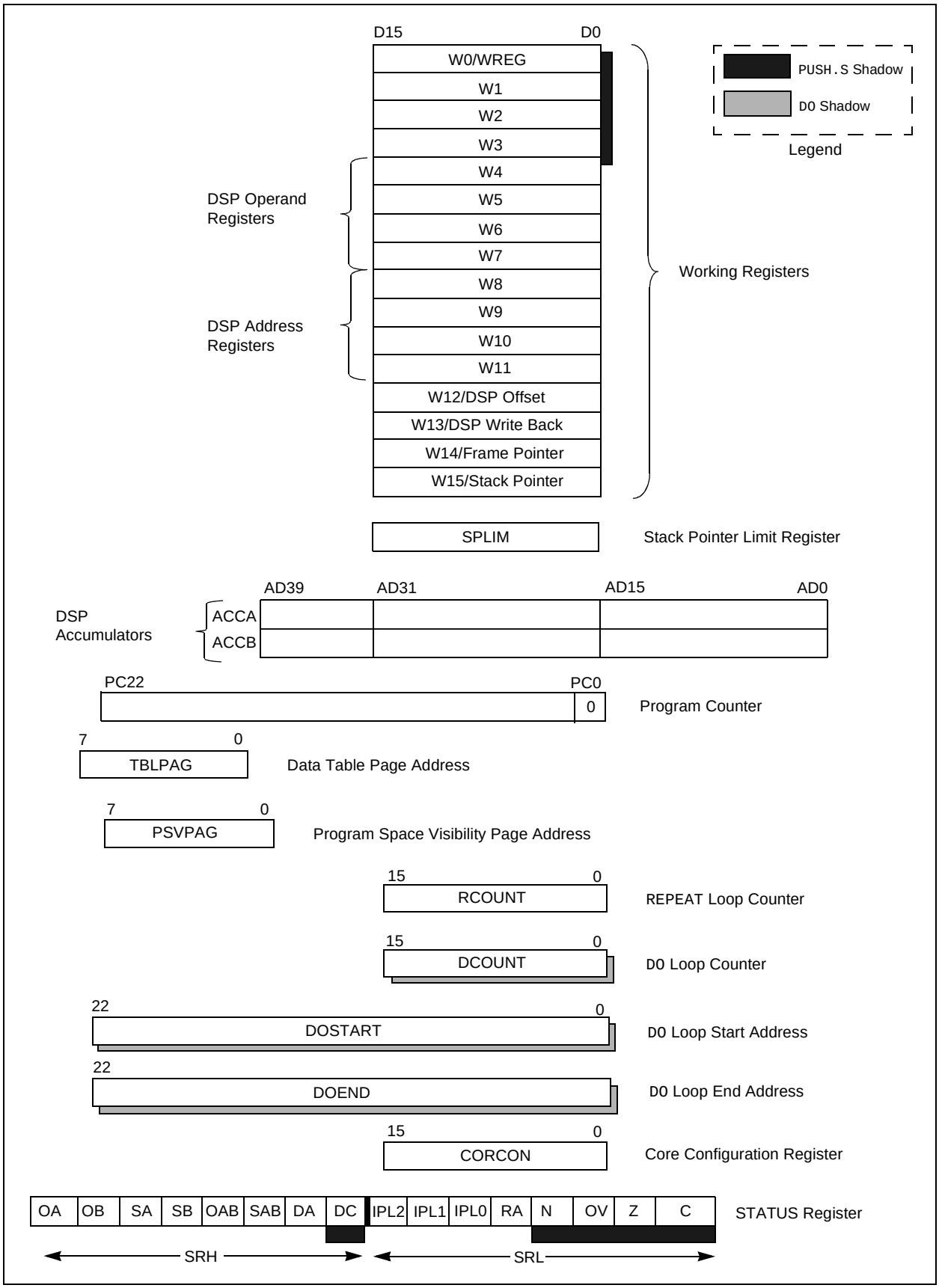

2.3 Divide Support

The dsPIC DSC devices feature a 16/16-bit signed fractional divide operation, as well as 32/16-bit and 16/16-bit signed and unsigned integer divide operations, in the form of single instruction iterative divides. The following instructions and data sizes are supported:

1. `DIVF` – 16/16 signed fractional divide
2. `DIV.sd` – 32/16 signed divide
3. `DIV.ud` – 32/16 unsigned divide
4. `DIV.sw` – 16/16 signed divide
5. `DIV.uw` – 16/16 unsigned divide

The 16/16 divides are similar to the 32/16 (same number of iterations), but the dividend is either zero-extended or sign-extended during the first iteration.

The divide instructions must be executed within a `REPEAT` loop. Any other form of execution (e.g. a series of discrete divide instructions) will not function correctly because the instruction flow depends on RCOUNT. The divide instruction does not automatically set up the RCOUNT value, and it must, therefore, be explicitly and correctly specified in the `REPEAT` instruction, as shown in Table 2-1 (`REPEAT` will execute the target instruction {operand value + 1} times). The `REPEAT` loop count must be set up for 18 iterations of the `DIV/DIVF` instruction. Thus, a complete divide operation requires 19 cycles.

Note:	The Divide flow is interruptible. However, the user needs to save the context as appropriate.

TABLE 2-1: DIVIDE INSTRUCTIONS

Instruction	Function
`DIVF`	Signed fractional divide: Wm/Wn → W0; Rem → W1
`DIV.sd`	Signed divide: (Wm + 1:Wm)/Wn → W0; Rem → W1
`DIV.ud`	Unsigned divide: (Wm + 1:Wm)/Wn → W0; Rem → W1
`DIV.sw`	Signed divide: Wm/Wn → W0; Rem → W1
`DIV.uw`	Unsigned divide: Wm/Wn → W0; Rem → W1

© 2006-2014 Microchip Technology Inc.

2.4 DSP Engine

The DSP engine consists of a high speed 17-bit x 17-bit multiplier, a barrel shifter, and a 40-bit adder/subtracter (with two target accumulators, round and saturation logic).

The DSP engine also has the capability to perform inherent accumulator-to-accumulator operations, which require no additional data. These instructions are `ADD`, `SUB` and `NEG`.

The DSP engine has various options selected through various bits in the CPU Core Configuration Register (CORCON), as listed below:

1. Fractional or integer DSP multiply (IF).
2. Signed or unsigned DSP multiply (US).
3. Conventional or convergent rounding (RND).
4. Automatic saturation on/off for ACCA (SATA).
5. Automatic saturation on/off for ACCB (SATB).
6. Automatic saturation on/off for writes to data memory (SATDW).
7. Accumulator Saturation mode selection (ACCSAT).

Note: For CORCON layout, see Table 3-3.

A block diagram of the DSP engine is shown in Figure 2-2.

TABLE 2-2: DSP INSTRUCTION SUMMARY

Instruction	Algebraic Operation	ACC WB?
`CLR`	A = 0	Yes
`ED`	$A = (x – y)^2$	No
`EDAC`	$A = A + (x – y)^2$	No
`MAC`	A = A + (x * y)	Yes
`MAC`	$A = A + x^2$	No
`MOVSAC`	No change in A	Yes
`MPY`	A = x * y	No
`MPY.N`	A = – x * y	No
`MSC`	A = A – x * y	Yes

FIGURE 2-2: DSP ENGINE BLOCK DIAGRAM

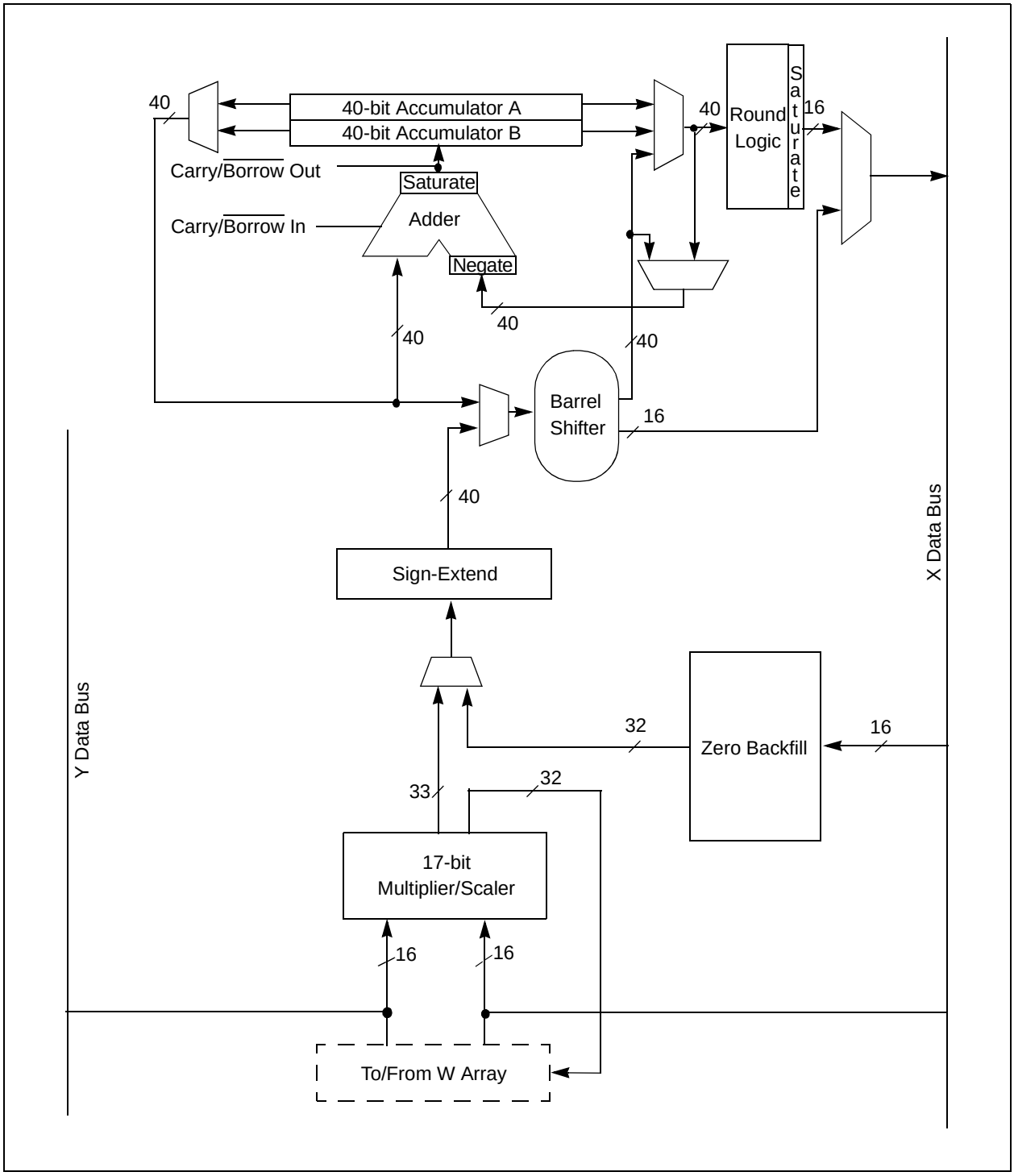

© 2006-2014 Microchip Technology Inc.

2.4.1 MULTIPLIER

The 17x17-bit multiplier is capable of signed or unsigned operation and can multiplex its output using a scaler to support either 1.31 fractional (Q31) or 32-bit integer results. Unsigned operands are zero-extended into the 17th bit of the multiplier input value. Signed operands are sign-extended into the 17th bit of the multiplier input value. The output of the 17x17-bit multiplier/scaler is a 33-bit value, which is sign-extended to 40 bits. Integer data is inherently represented as a signed two's complement value, where the MSB is defined as a sign bit. Generally speaking, the range of an N-bit two's complement integer is -2^{N-1} to $2^{N-1} – 1$. For a 16-bit integer, the data range is -32768 (0x8000) to 32767 (0x7FFF), including 0. For a 32-bit integer, the data range is -2,147,483,648 (0x8000 0000) to 2,147,483,645 (0x7FFF FFFF).

When the multiplier is configured for fractional multiplication, the data is represented as a two's complement fraction, where the MSB is defined as a sign bit and the radix point is implied to lie just after the sign bit (QX format). The range of an N-bit two's complement fraction with this implied radix point is -1.0 to $(1-2^{1-N})$. For a 16-bit fraction, the Q15 data range is -1.0 (0x8000) to 0.999969482 (0x7FFF), including 0, and has a precision of 3.01518×10^{-5}. In Fractional mode, a 16x16 multiply operation generates a 1.31 product, which has a precision of 4.65661×10^{-10}.

The same multiplier is used to support the MCU multiply instructions, which include integer 16-bit signed, unsigned and mixed sign multiplies.

The `MUL` instruction may be directed to use byte or word sized operands. Byte operands will direct a 16-bit result, and word operands will direct a 32-bit result to the specified register(s) in the W array.

2.4.2 DATA ACCUMULATORS AND ADDER/SUBTRACTER

The data accumulator consists of a 40-bit adder/subtracter with automatic sign extension logic. It can select one of two accumulators (A or B) as its pre-accumulation source and post-accumulation destination. For the `ADD` and `LAC` instructions, the data to be accumulated or loaded can be optionally scaled via the barrel shifter, prior to accumulation.

2.4.2.1 Adder/Subtracter, Overflow and Saturation

The adder/subtracter is a 40-bit adder with an optional zero input into one side and either true or complement data into the other input. In the case of addition, the carry/borrow input is active high and the other input is true data (not complemented), whereas in the case of subtraction, the carry/borrow input is active low and the other input is complemented. The adder/subtracter generates overflow Status bits SA/SB and OA/OB, which are latched and reflected in the STATUS register.

- Overflow from bit 39: this is a catastrophic overflow in which the sign of the accumulator is destroyed.
- Overflow into guard bits 32 through 39: this is a recoverable overflow. This bit is set whenever all the guard bits are not identical to each other.

The adder has an additional saturation block which controls accumulator data saturation, if selected. It uses the result of the adder, the overflow Status bits described above, and the SATA/B (CORCON<7:6>) and ACCSAT (CORCON<4>) mode control bits to determine when and to what value to saturate.

Six STATUS register bits have been provided to support saturation and overflow; they are:

1. OA:
   ACCA overflowed into guard bits
2. OB:
   ACCB overflowed into guard bits
3. SA:
   ACCA saturated (bit 31 overflow and saturation)
   or
   ACCA overflowed into guard bits and saturated (bit 39 overflow and saturation)
4. SB:
   ACCB saturated (bit 31 overflow and saturation)
   or
   ACCB overflowed into guard bits and saturated (bit 39 overflow and saturation)
5. OAB:
   Logical OR of OA and OB
6. SAB:
   Logical OR of SA and SB

The OA and OB bits are modified each time data passes through the adder/subtracter. When set, they indicate that the most recent operation has overflowed into the accumulator guard bits (bits 32 through 39). The OA and OB bits can also optionally generate an arithmetic warning trap when set and the corresponding overflow trap flag enable bit (OVATE, OVBTE) in the INTCON1 register (refer to **Section 5.0 "Interrupts"**) is set. This allows the user to take immediate action, for example, to correct system gain.

The SA and SB bits are modified each time data passes through the adder/subtracter, but can only be cleared by the user. When set, they indicate that the accumulator has overflowed its maximum range (bit 31 for 32-bit saturation, or bit 39 for 40-bit saturation) and will be saturated (if saturation is enabled). When saturation is not enabled, SA and SB default to bit 39 overflow and thus indicate that a catastrophic overflow has occurred. If the COVTE bit in the INTCON1 register is set, SA and SB bits will generate an arithmetic warning trap when saturation is disabled.

The overflow and saturation Status bits can optionally be viewed in the STATUS Register (SR) as the logical OR of OA and OB (in bit OAB) and the logical OR of SA and SB (in bit SAB). This allows programmers to check one bit in the STATUS Register to determine if either accumulator has overflowed, or one bit to determine if either accumulator has saturated. This is useful for complex number arithmetic, which typically uses both the accumulators.

The device supports three Saturation and Overflow modes.

1. Bit 39 Overflow and Saturation:
   When bit 39 overflow and saturation occurs, the saturation logic loads the maximally positive 9.31 (0x7FFFFFFFFF) or maximally negative 9.31 value (0x8000000000) into the target accumulator. The SA or SB bit is set and remains set until cleared by the user. This is referred to as ‘super saturation’ and provides protection against erroneous data or unexpected algorithm problems (e.g., gain calculations).
2. Bit 31 Overflow and Saturation:
   When bit 31 overflow and saturation occurs, the saturation logic then loads the maximally positive 1.31 value (0x007FFFFFFF) or maximally negative 1.31 value (0x0080000000) into the target accumulator. The SA or SB bit is set and remains set until cleared by the user. When this Saturation mode is in effect, the guard bits are not used (so the OA, OB or OAB bits are never set).
3. Bit 39 Catastrophic Overflow
   The bit 39 overflow Status bit from the adder is used to set the SA or SB bit, which remain set until cleared by the user. No saturation operation is performed and the accumulator is allowed to overflow (destroying its sign). If the COVTE bit in the INTCON1 register is set, a catastrophic overflow can initiate a trap exception.

2.4.2.2 Accumulator ‘Write Back’

The `MAC` class of instructions (with the exception of `MPY, MPY.N, ED` and `EDAC`) can optionally write a rounded version of the high word (bits 31 through 16) of the accumulator that is not targeted by the instruction into data space memory. The write is performed across the X bus into combined X and Y address space. The following addressing modes are supported:

1. W13, Register Direct:
   The rounded contents of the non-target accumulator are written into W13 as a 1.15 fraction.
2. [W13] + = 2, Register Indirect with Post-Increment: The rounded contents of the non-target accumulator are written into the address pointed to by W13 as a 1.15 fraction. W13 is then incremented by 2 (for a word write).

2.4.2.3 Round Logic

The round logic is a combinational block, which performs a conventional (biased) or convergent (unbiased) round function during an accumulator write (store). The Round mode is determined by the state of the RND bit in the CORCON register. It generates a 16-bit, 1.15 data value which is passed to the data space write saturation logic. If rounding is not indicated by the instruction, a truncated 1.15 data value is stored and the least significant word (lsw) is simply discarded.

Conventional rounding takes bit 15 of the accumulator, zero-extends it and adds it to the ACCxH word (bits 16 through 31 of the accumulator). If the ACCxL word (bits 0 through 15 of the accumulator) is between 0x8000 and 0xFFFF (0x8000 included), ACCxH is incremented. If ACCxL is between 0x0000 and 0x7FFF, ACCxH is left unchanged. A consequence of this algorithm is that over a succession of random rounding operations, the value will tend to be biased slightly positive.

Convergent (or unbiased) rounding operates in the same manner as conventional rounding, except when ACCxL equals 0x8000. If this is the case, the LSb (bit 16 of the accumulator) of ACCxH is examined. If it is ‘1’, ACCxH is incremented. If it is ‘0’, ACCxH is not modified. Assuming that bit 16 is effectively random in nature, this scheme will remove any rounding bias that may accumulate.

The `SAC` and `SAC.R` instructions store either a truncated (`SAC`) or rounded (`SAC.R`) version of the contents of the target accumulator to data memory, via the X bus (subject to data saturation, see **Section 2.4.2.4 “Data Space Write Saturation”**). Note that for the `MAC` class of instructions, the accumulator write back operation will function in the same manner, addressing combined MCU (X and Y) data space though the X bus. For this class of instructions, the data is always subject to rounding.

© 2006-2014 Microchip Technology Inc.

2.4.2.4 Data Space Write Saturation

In addition to adder/subtracter saturation, writes to data space may also be saturated, but without affecting the contents of the source accumulator. The data space write saturation logic block accepts a 16-bit, 1.15 fractional value from the round logic block as its input, together with overflow status from the original source (accumulator) and the 16-bit round adder. These are combined and used to select the appropriate 1.15 fractional value as output to write to data space memory.

If the SATDW bit in the CORCON register is set, data (after rounding or truncation) is tested for overflow and adjusted accordingly. For input data greater than 0x007FFF, data written to memory is forced to the maximum positive 1.15 value, 0x7FFF. For input data less than 0xFF8000, data written to memory is forced to the maximum negative 1.15 value, 0x8000. The MSb of the source (bit 39) is used to determine the sign of the operand being tested.

If the SATDW bit in the CORCON register is not set, the input data is always passed through unmodified under all conditions.

2.4.3 BARREL SHIFTER

The barrel shifter is capable of performing up to 15-bit arithmetic or logic right shifts, or up to 16-bit left shifts in a single cycle. The source can be either of the two DSP accumulators or the X bus (to support multi-bit shifts of register or memory data).

The shifter requires a signed binary value to determine both the magnitude (number of bits) and direction of the shift operation. A positive value will shift the operand right. A negative value will shift the operand left. A value of ‘0’ will not modify the operand.

The barrel shifter is 40 bits wide, thereby obtaining a 40-bit result for DSP shift operations and a 16-bit result for MCU shift operations. Data from the X bus is presented to the barrel shifter between bit positions 16 to 31 for right shifts, and bit positions 0 to 15 for left shifts.

NOTES:

© 2006-2014 Microchip Technology Inc.

3.0 MEMORY ORGANIZATION

Note: This data sheet summarizes features of this group of dsPIC30F devices and is not intended to be a complete reference source. For more information on the CPU, peripherals, register descriptions and general device functionality, refer to the "*dsPIC30F Family Reference Manual*" (DS70046). For more information on the device instruction set and programming, refer to the "*dsPIC30F/33F Programmer's Reference Manual*" (DS70157).

3.1 Program Address Space

The program address space is 4M instruction words. It is addressable by a 24-bit value from either the 23-bit PC, table instruction Effective Address (EA), or data space EA, when program space is mapped into data space, as defined by Table 3-1. Note that the program space address is incremented by two between successive program words, in order to provide compatibility with data space addressing.

User program space access is restricted to the lower 4M instruction word address range (0x000000 to 0x7FFFFE), for all accesses other than `TBLRD/TBLWT`, which use TBLPAG<7> to determine user or configuration space access. In Table 3-1, Read/Write instructions, bit 23 allows access to the Device ID, the User ID and the Configuration bits. Otherwise, bit 23 is always clear.

Note: The address map shown in Figure 3-1 is conceptual, and the actual memory configuration may vary across individual devices depending on available memory.

FIGURE 3-1: PROGRAM SPACE MEMORY MAP FOR dsPIC30F1010/202X

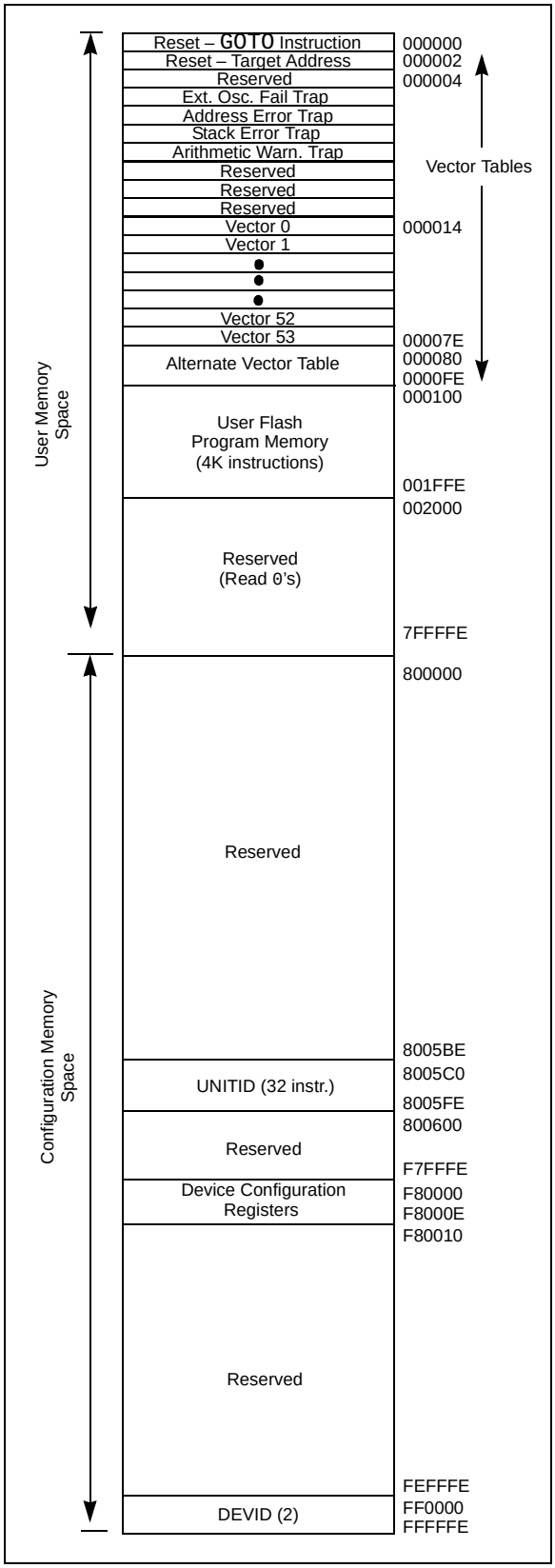

TABLE 3-1: PROGRAM SPACE ADDRESS CONSTRUCTION

Access Type	Access Space	Program Space Address				
		<23>	<22:16>	<15>	<14:1>	<0>
Instruction Access	User	0	PC<22:1>			0
TBLRD/TBLWT	User (TBLPAG<7> = 0)	TBLPAG<7:0>		Data EA <15:0>		
TBLRD/TBLWT	Configuration (TBLPAG<7> = 1)	TBLPAG<7:0>		Data EA <15:0>		
Program Space Visibility	User	0	PSVPAG<7:0>		Data EA <14:0>	

FIGURE 3-2: DATA ACCESS FROM PROGRAM SPACE ADDRESS GENERATION

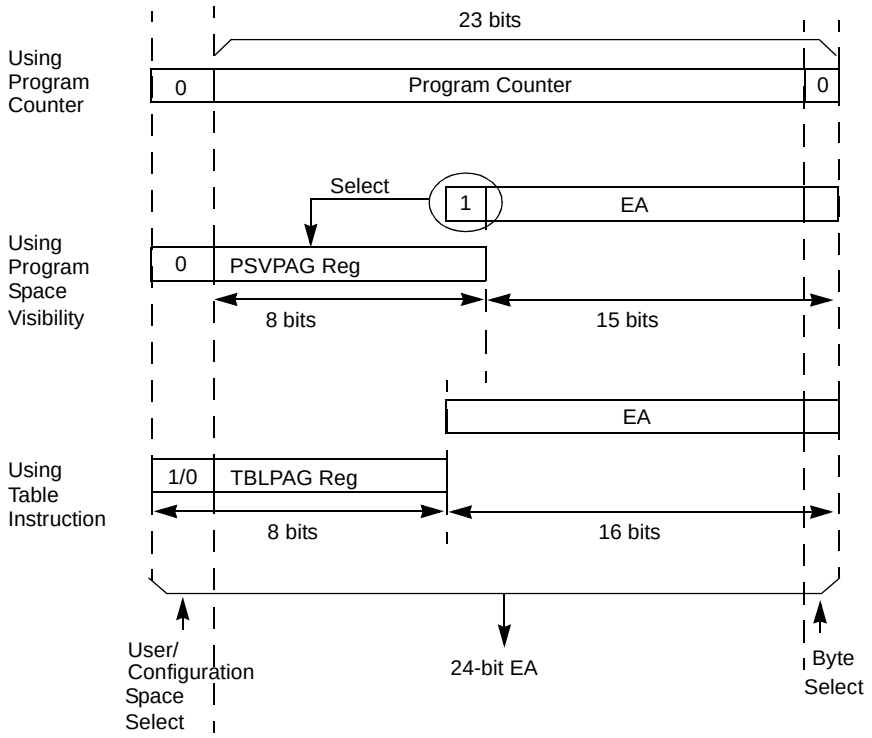

Note: Program Space Visibility cannot be used to access bits <23:16> of a word in program memory.

© 2006-2014 Microchip Technology Inc.

3.1.1 DATA ACCESS FROM PROGRAM MEMORY USING TABLE INSTRUCTIONS

This architecture fetches 24-bit wide program memory. Consequently, instructions are always aligned. However, as the architecture is modified Harvard, data can also be present in program space.

There are two methods by which program space can be accessed; via special table instructions, or through the remapping of a 16K word program space page into the upper half of data space (see **Section 3.1.2 "Data Access from Program Memory Using Program Space Visibility"**). The `TBLRDL` and `TBLWTL` instructions offer a direct method of reading or writing the least significant word (lsw) of any address within program space, without going through data space. The `TBLRDH` and `TBLWTH` instructions are the only method whereby the upper 8 bits of a program space word can be accessed as data.

The PC is incremented by two for each successive 24-bit program word. This allows program memory addresses to directly map to data space addresses. Program memory can thus be regarded as two 16-bit word wide address spaces, residing side by side, each with the same address range. `TBLRDL` and `TBLWTL` access the space which contains the Least Significant Data Word, and `TBLRDH` and `TBLWTH` access the space which contains the Most Significant Data Byte.

Figure 3-2 shows how the EA is created for table operations and data space accesses (`PSV = 1`). Here, P<23:0> refers to a program space word, whereas D<15:0> refers to a data space word.

A set of Table Instructions is provided to move byte or word sized data to and from program space.

1. **`TBLRDL:`** Table Read Low
   Word: Read the lsw of the program address;
   P<15:0> maps to D<15:0>.
   Byte: Read one of the LSBs of the program address;
   P<7:0> maps to the destination byte when byte select = `0`;
   P<15:8> maps to the destination byte when byte select = `1`.
2. **`TBLWTL:`** Table Write Low (refer to **Section 7.0 "Flash Program Memory"** for details on Flash Programming).
3. **`TBLRDH:`** Table Read High
   Word: Read the most significant word of the program address;
   P<23:16> maps to D<7:0>; D<15:8> always be = `0`.
   Byte: Read one of the MSBs of the program address;
   P<23:16> maps to the destination byte when byte select = `0`;
   The destination byte will always be = `0` when byte select = `1`.
4. **`TBLWTH:`** Table Write High (refer to **Section 7.0 "Flash Program Memory"** for details on Flash Programming).

FIGURE 3-3: PROGRAM DATA TABLE ACCESS (LEAST SIGNIFICANT WORD)

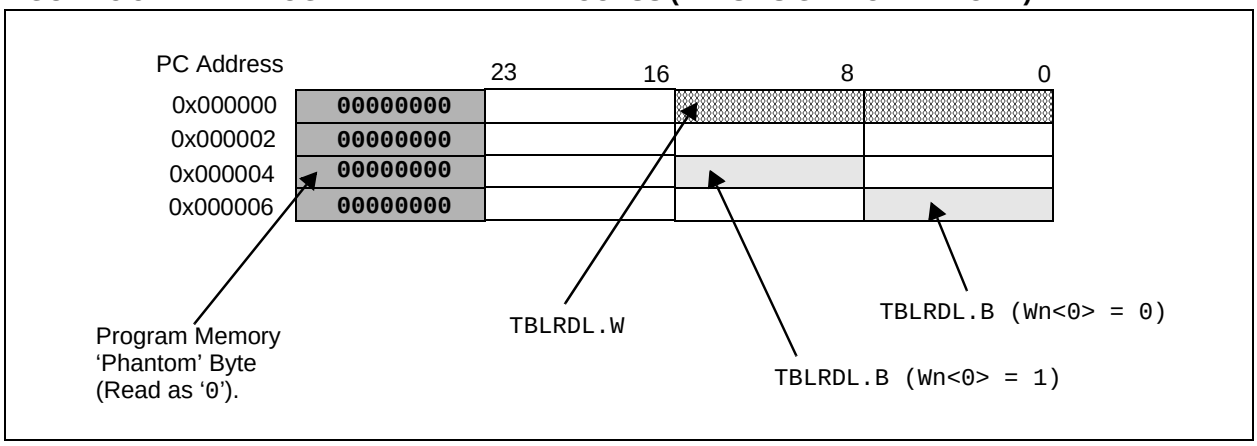

FIGURE 3-4: PROGRAM DATA TABLE ACCESS (MOST SIGNIFICANT BYTE)

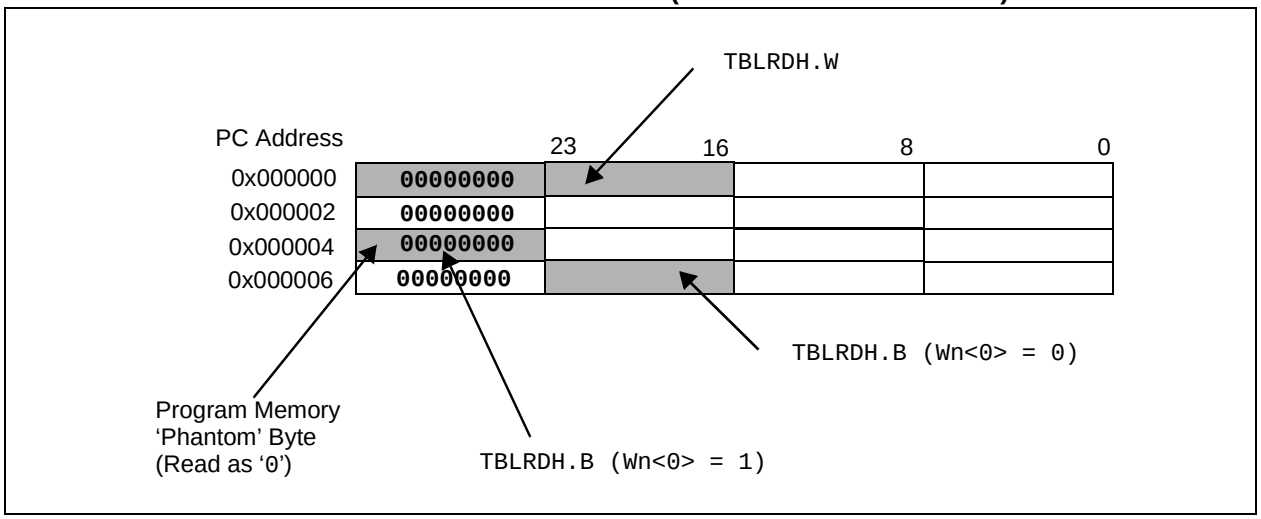

3.1.2 DATA ACCESS FROM PROGRAM MEMORY USING PROGRAM SPACE VISIBILITY

The upper 32 Kbytes of data space may optionally be mapped into any 16K word program space page. This provides transparent access of stored constant data from X data space, without the need to use special instructions (i.e., `TBLRDL/H`, `TBLWTL/H` instructions).

Program space access through the data space occurs if the MSb of the data space EA is set and program space visibility is enabled, by setting the PSV bit in the Core Control register (CORCON). The functions of CORCON are discussed in **Section 2.4 "DSP Engine"**.

Data accesses to this area add an additional cycle to the instruction being executed, since two program memory fetches are required.

Note that the upper half of addressable data space is always part of the X data space. Therefore, when a DSP operation uses program space mapping to access this memory region, Y data space should typically contain state (variable) data for DSP operations, whereas X data space should typically contain coefficient (constant) data.

Although each data space address, 0x8000 and higher, maps directly into a corresponding program memory address (see Figure 3-5), only the lower 16-bits of the 24-bit program word are used to contain the data. The upper 8 bits should be programmed to force an illegal instruction to maintain machine robustness. Refer to the "*dsPIC30F/33F Programmer's Reference Manual*" (DS70157) for details on instruction encoding.

Note that by incrementing the PC by 2 for each program memory word, the Least Significant 15 bits of data space addresses directly map to the Least Significant 15 bits in the corresponding program space addresses. The remaining bits are provided by the Program Space Visibility Page register, PSVPAG<7:0>, as shown in Figure 3-5.

Note:	PSV access is temporarily disabled during Table Reads/Writes.

For instructions that use PSV which are executed outside a `REPEAT` loop:

- The following instructions will require one instruction cycle in addition to the specified execution time:
  - `MAC` class of instructions with data operand prefetch
  - `MOV` instructions
  - `MOV.D` instructions
- All other instructions will require two instruction cycles in addition to the specified execution time of the instruction.

For instructions that use PSV which are executed inside a `REPEAT` loop:

- The following instances will require two instruction cycles in addition to the specified execution time of the instruction:
  - Execution in the first iteration
  - Execution in the last iteration
  - Execution prior to exiting the loop due to an interrupt
  - Execution upon re-entering the loop after an interrupt is serviced
- Any other iteration of the `REPEAT` loop will allow the instruction, accessing data using PSV, to execute in a single cycle.

© 2006-2014 Microchip Technology Inc.

FIGURE 3-5: DATA SPACE WINDOW INTO PROGRAM SPACE OPERATION

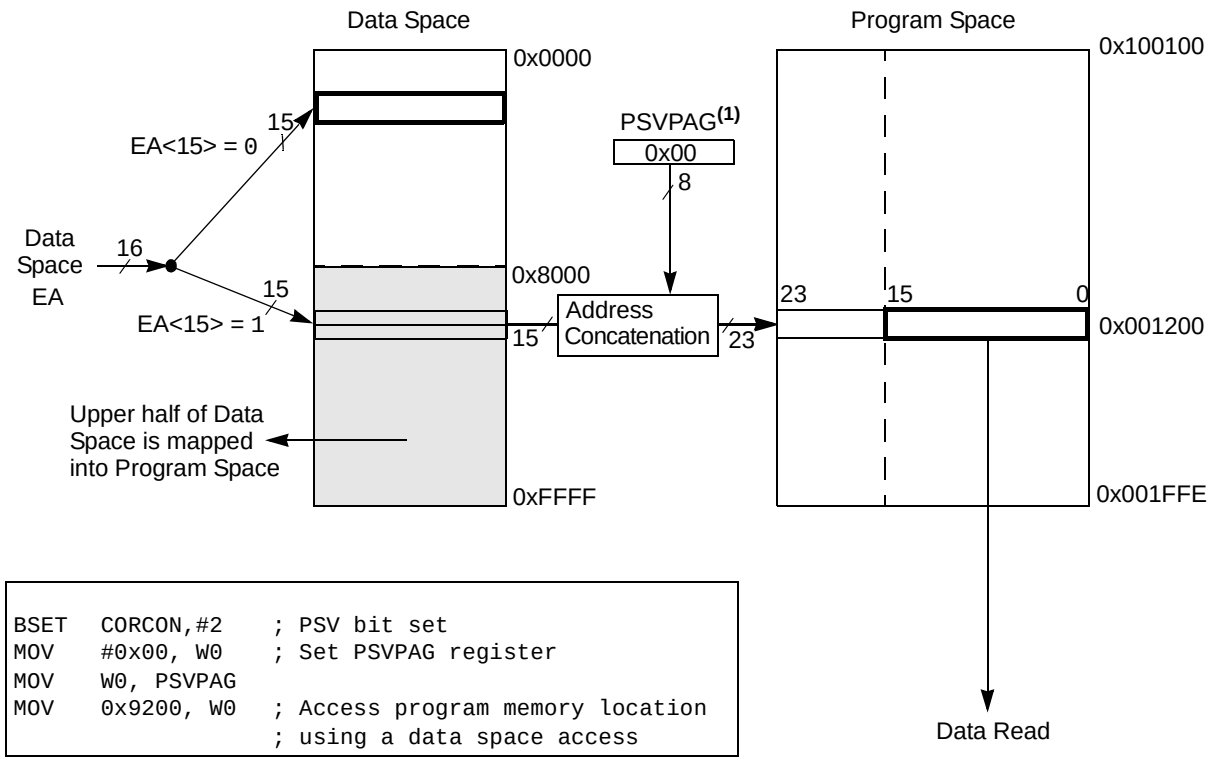


```
BSET   CORCON,#2    ; PSV bit set
MOV    #0x00, W0    ; Set PSVPAG register
MOV    W0, PSVPAG
MOV    0x9200, W0   ; Access program memory location
                    ; using a data space access
```

Note: PSVPAG is an 8-bit register, containing bits <22:15> of the program space address (i.e., it defines the page in program space to which the upper half of data space is being mapped).

3.2 Data Address Space

The core has two data spaces. The data spaces can be considered either separate (for some DSP instructions), or as one unified linear address range (for MCU instructions). The data spaces are accessed using two Address Generation Units (AGUs) and separate data paths.

3.2.1 DATA SPACE MEMORY MAP

The data space memory is split into two blocks, X and Y data space. A key element of this architecture is that Y space is a subset of X space, and is fully contained within X space. In order to provide an apparent linear addressing space, X and Y spaces have contiguous addresses.

When executing any instruction other than one of the MAC class of instructions, the X block consists of the 256 byte data address space (including all Y addresses). When executing one of the MAC class of instructions, the X block consists of the 256 bytes data address space excluding the Y address block (for data reads only). In other words, all other instructions regard the entire data memory as one composite address space. The MAC class instructions extract the Y address space from data space and address it using EAs sourced from W10 and W11. The remaining X data space is addressed using W8 and W9. Both address spaces are concurrently accessed only with the MAC class instructions.

A data space memory map is shown in Figure 3-6.

FIGURE 3-6: DATA SPACE MEMORY MAP

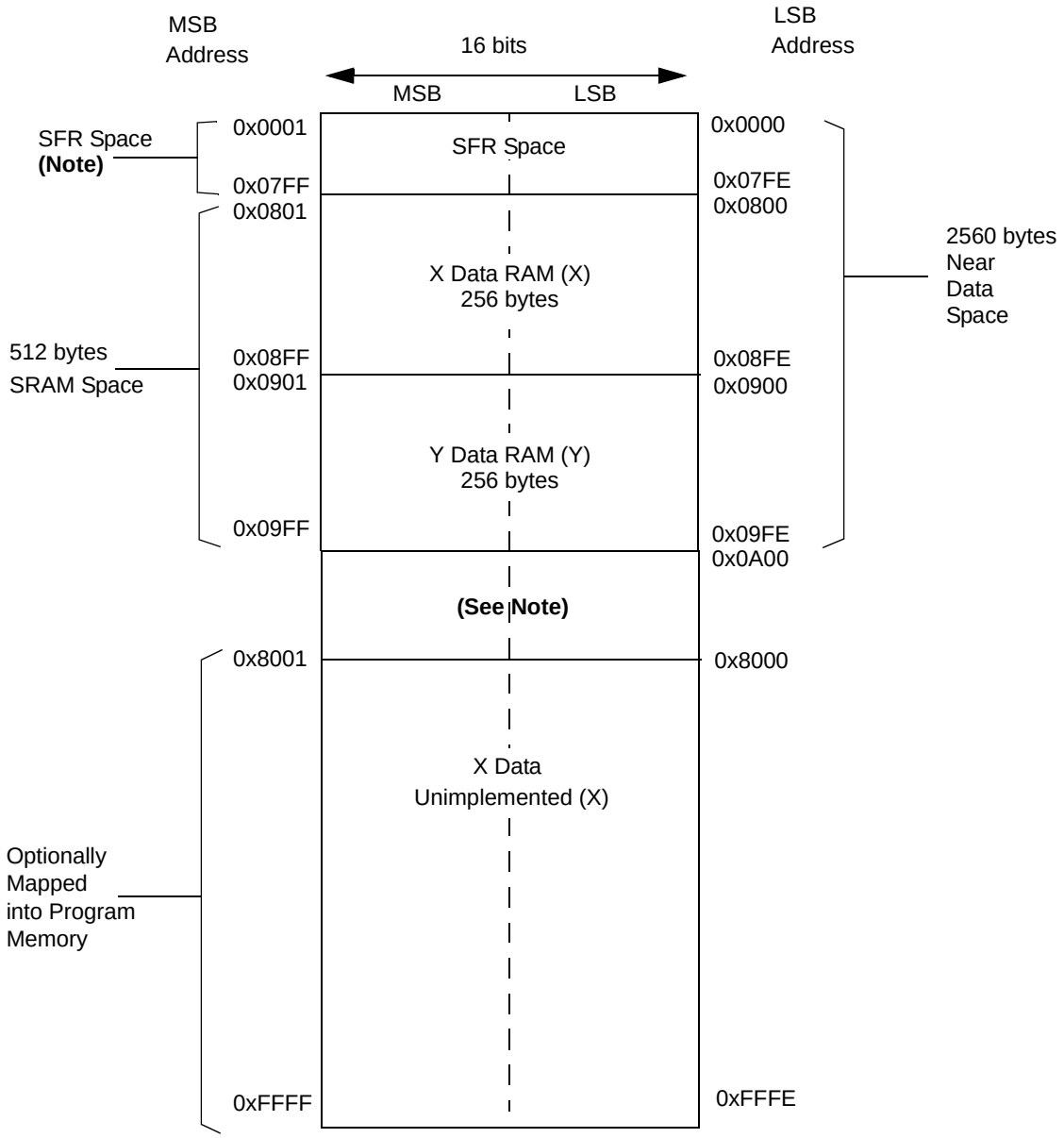

Note: Unimplemented SFR or SRAM locations read as '0'.

© 2006-2014 Microchip Technology Inc.

FIGURE 3-7: DATA SPACE FOR MCU AND DSP (MAC CLASS) INSTRUCTIONS

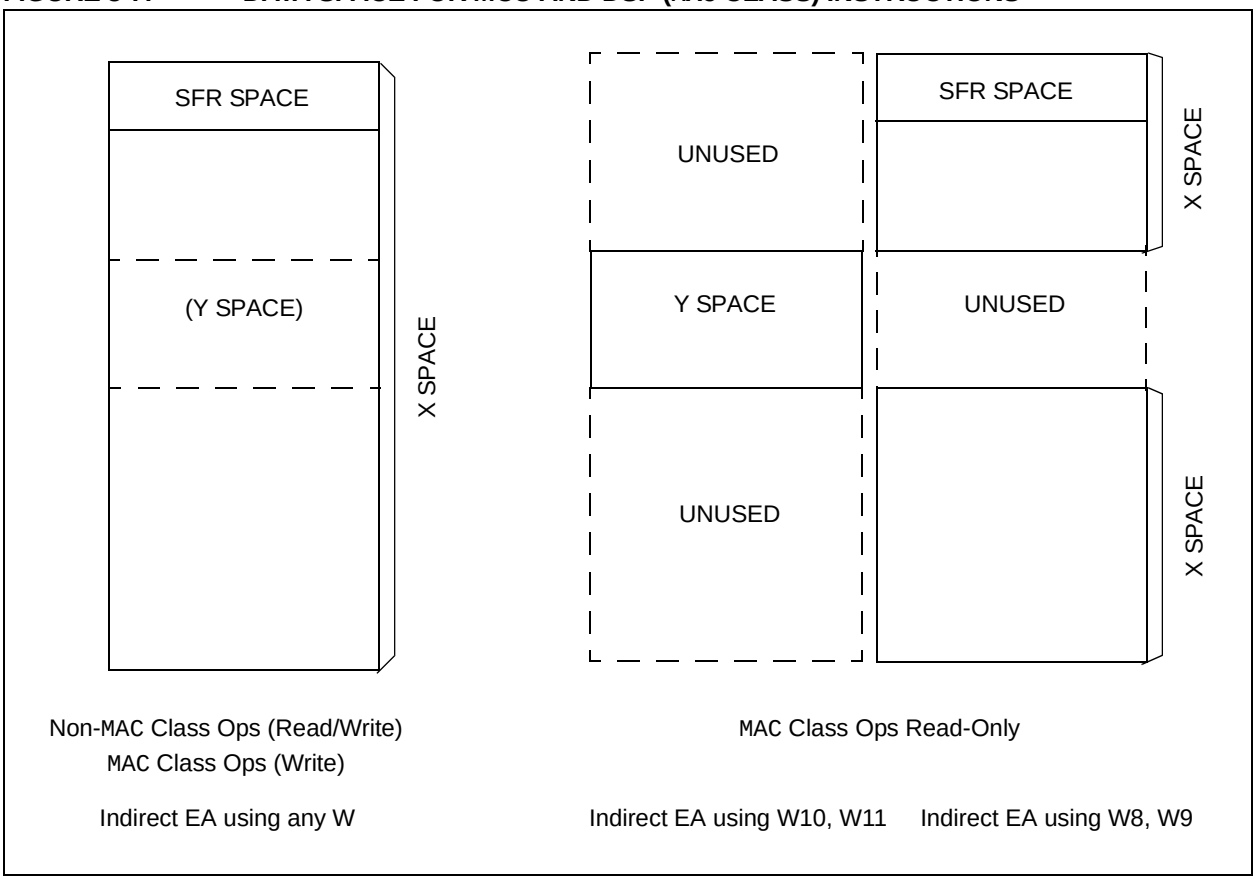

3.2.2 DATA SPACES

The X data space is used by all instructions and supports all Addressing modes. There are separate read and write data buses. The X read data bus is the return data path for all instructions that view data space as combined X and Y address space. It is also the X address space data path for the dual operand read instructions (MAC class). The X write data bus is the only write path to data space for all instructions.

The X data space also supports modulo addressing for all instructions, subject to Addressing mode restrictions. Bit-Reversed Addressing is only supported for writes to X data space.

The Y data space is used in concert with the X data space by the MAC class of instructions (CLR, ED, EDAC, MAC, MOVSAC, MPY, MPY.N and MSC) to provide two concurrent data read paths. No writes occur across the Y bus. This class of instructions dedicates two W register pointers, W10 and W11, to always address Y data space, independent of X data space, whereas W8 and W9 always address X data space. Note that during accumulator write back, the data address space is considered a combination of X and Y data spaces, so the write occurs across the X bus. Consequently, the write can be to any address in the entire data space.

The Y data space can only be used for the data prefetch operation associated with the MAC class of instructions. It also supports modulo addressing for automated circular buffers. Of course, all other instructions can access the Y data address space through the X data path, as part of the composite linear space.

The boundary between the X and Y data spaces is defined as shown in Figure 3-6 and is not user programmable. Should an EA point to data outside its own assigned address space, or to a location outside physical memory, an all-zero word/byte will be returned. For example, although Y address space is visible by all non-MAC instructions using any Addressing mode, an attempt by a MAC instruction to fetch data from that space, using W8 or W9 (X space pointers), will return 0x0000.

TABLE 3-2: EFFECT OF INVALID MEMORY ACCESSES

Attempted Operation	Data Returned
EA = an unimplemented address	0x0000
W8 or W9 used to access Y data space in a MAC instruction	0x0000
W10 or W11 used to access X data space in a MAC instruction	0x0000

All effective addresses are 16 bits wide and point to bytes within the data space. Therefore, the data space address range is 64 Kbytes or 32K words.

3.2.3 DATA SPACE WIDTH

The core data width is 16 bits. All internal registers are organized as 16-bit wide words. Data space memory is organized in byte addressable, 16-bit wide blocks.

3.2.4 DATA ALIGNMENT

To help maintain backward compatibility with PIC® MCU devices and improve data space memory usage efficiency, the dsPIC30F instruction set supports both word and byte operations. Data is aligned in data memory and registers as words, but all data space EAs resolve to bytes. Data byte reads will read the complete word, which contains the byte, using the LSb of any EA to determine which byte to select. The selected byte is placed onto the LSB of the X data path (no byte accesses are possible from the Y data path as the MAC class of instruction can only fetch words). That is, data memory and registers are organized as two parallel byte-wide entities with shared (word) address decode, but separate write lines. Data byte writes only write to the corresponding side of the array or register which matches the byte address.

As a consequence of this byte accessibility, all effective address calculations (including those generated by the DSP operations, which are restricted to word sized data) are internally scaled to step through word-aligned memory. For example, the core would recognize that Post-Modified Register Indirect Addressing mode, [Ws++], will result in a value of Ws + 1 for byte operations and Ws + 2 for word operations.

All word accesses must be aligned to an even address. Misaligned word data fetches are not supported, so care must be taken when mixing byte and word operations, or translating from 8-bit MCU code. Should a misaligned read or write be attempted, an address error trap will be generated. If the error occurred on a read, the instruction underway is completed, whereas if it occurred on a write, the instruction will be executed but the write will not occur. In either case, a trap will then be executed, allowing the system and/or user to examine the machine state prior to execution of the address fault.

FIGURE 3-8: DATA ALIGNMENT

	15 MSB 8	7 LSB 0	
0001	Byte 1	Byte 0	0000
0003	Byte 3	Byte 2	0002
0005	Byte 5	Byte 4	0004

© 2006-2014 Microchip Technology Inc.

All byte loads into any W register are loaded into the LSB. The MSB is not modified.

A Sign-Extend (SE) instruction is provided to allow users to translate 8-bit signed data to 16-bit signed values. Alternatively, for 16-bit unsigned data, users can clear the MSB of any W register by executing a Zero-Extend (ZE) instruction on the appropriate address.

Although most instructions are capable of operating on word or byte data sizes, it should be noted that some instructions, including the DSP instructions, operate only on words.

3.2.5 NEAR DATA SPACE

An 8 Kbyte 'near' data space is reserved in X address memory space between 0x0000 and 0x1FFF, which is directly addressable via a 13-bit absolute address field within all memory direct instructions. The remaining X address space and all of the Y address space is addressable indirectly. Additionally, the whole of X data space is addressable using MOV instructions, which support memory direct addressing with a 16-bit address field.

3.2.6 SOFTWARE STACK

The dsPIC DSC device contains a software stack. W15 is used as the Stack Pointer.

The Stack Pointer always points to the first available free word and grows from lower addresses towards higher addresses. It pre-decrements for stack pops and post-increments for stack pushes, as shown in Figure 3-9. Note that for a PC push during any CALL instruction, the MSB of the PC is zero-extended before the push, ensuring that the MSB is always clear.

Note:	A PC push during exception processing will concatenate the SRL register to the MSB of the PC prior to the push.

There is a Stack Pointer Limit register (SPLIM) associated with the Stack Pointer. SPLIM is uninitialized at Reset. As is the case for the Stack Pointer, SPLIM<0> is forced to '0', because all stack operations must be word-aligned. Whenever an Effective Address (EA) is generated using W15 as a source or destination pointer, the address thus generated is compared with the value in SPLIM. If the contents of the Stack Pointer (W15) and the SPLIM register are equal and a push operation is performed, a stack error trap will not occur. The stack error trap will occur on a subsequent push operation. Thus, for example, if it is desirable to cause a stack error trap when the stack grows beyond address 0x2000 in RAM, initialize the SPLIM with the value, 0x1FFE.

Similarly, a Stack Pointer Underflow (stack error) trap is generated when the Stack Pointer address is found to be less than 0x0800, thus preventing the stack from interfering with the Special Function Register (SFR) space.

A write to the SPLIM register should not be immediately followed by an indirect read operation using W15.

FIGURE 3-9: CALL STACK FRAME

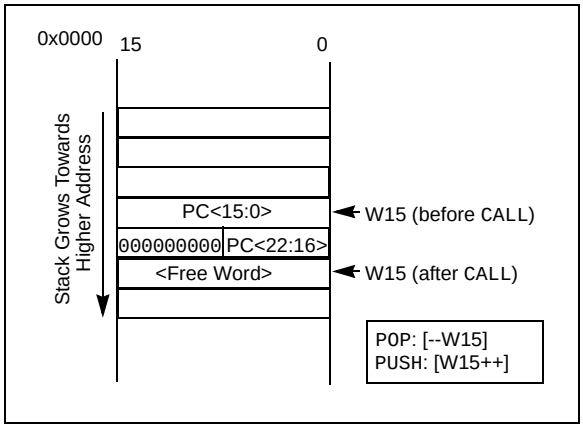

3.2.7 DATA RAM PROTECTION

The dsPIC30F1010/202X devices support data RAM protection features which enable segments of RAM to be protected when used in conjunction with Boot Code Segment Security. BSRAM (Secure RAM segment for BS) is accessible only from the Boot Segment Flash code when enabled. See Table 3-3 for the BSRAM SFR.

TABLE 3-3: CORE REGISTER MAP

SFR Name	Addr.	Bit 15	Bit 14	Bit 13	Bit 12	Bit 11	Bit 10	Bit 9	Bit 8	Bit 7	Bit 6	Bit 5	Bit 4	Bit 3	Bit 2	Bit 1	Bit 0	Reset State
W0	0000	W0/WREG																0000 0000 0000 0000
W1	0002	W1																0000 0000 0000 0000
W2	0004	W2																0000 0000 0000 0000
W3	0006	W3																0000 0000 0000 0000
W4	0008	W4																0000 0000 0000 0000
W5	000A	W5																0000 0000 0000 0000
W6	000C	W6																0000 0000 0000 0000
W7	000E	W7																0000 0000 0000 0000
W8	0010	W8																0000 0000 0000 0000
W9	0012	W9																0000 0000 0000 0000
W10	0014	W10																0000 0000 0000 0000
W11	0016	W11																0000 0000 0000 0000
W12	0018	W12																0000 0000 0000 0000
W13	001A	W13																0000 0000 0000 0000
W14	001C	W14																0000 0000 0000 0000
W15	001E	W15																0000 1000 0000 0000
SPLIM	0020	SPLIM																0000 0000 0000 0000
ACCAL	0022	ACCAL																0000 0000 0000 0000
ACCAH	0024	ACCAH																0000 0000 0000 0000
ACCAU	0026	Sign-Extension (ACCA<39>)								ACCAU								0000 0000 0000 0000
ACCBL	0028	ACCBL																0000 0000 0000 0000
ACCBH	002A	ACCBH																0000 0000 0000 0000
ACCBU	002C	Sign-Extension (ACCB<39>)								ACCBU								0000 0000 0000 0000
PCL	002E	PCL																0000 0000 0000 0000
PCH	0030	—	—	—	—	—	—	—	—	—	PCH							0000 0000 0000 0000
TBLPAG	0032	—	—	—	—	—	—	—	—	TBLPAG								0000 0000 0000 0000
PSVPAG	0034	—	—	—	—	—	—	—	—	PSVPAG								0000 0000 0000 0000
RCOUNT	0036	RCOUNT																uuuu uuuu uuuu uuuu
DCOUNT	0038	DCOUNT																uuuu uuuu uuuu uuuu
DOSTARTL	003A	DOSTARTL															0	uuuu uuuu uuuu uuu0
DOSTARTH	003C	—	—	—	—	—	—	—	—	—	DOSTARTH							0000 0000 0uuu uuuu
DOENDL	003E	DOENDL															0	uuuu uuuu uuuu uuu0
DOENDH	0040	—	—	—	—	—	—	—	—	—	DOENDH							0000 0000 0uuu uuuu
SR	0042	OA	OB	SA	SB	OAB	SAB	DA	DC	IPL2	IPL1	IPL0	RA	N	OV	Z	C	0000 0000 0000 0000
CORCON	0044	—	—	—	US	EDT	DL2	DL1	DL0	SATA	SATB	SATDW	ACCSAT	IPL3	PSV	RND	IF	0000 0000 0010 0000

Legend: u = uninitialized bit

© 2006-2014 Microchip Technology Inc.

TABLE 3-3: CORE REGISTER MAP (CONTINUED)

SFR Name	Addr.	Bit 15	Bit 14	Bit 13	Bit 12	Bit 11	Bit 10	Bit 9	Bit 8	Bit 7	Bit 6	Bit 5	Bit 4	Bit 3	Bit 2	Bit 1	Bit 0	Reset State
MODCON	0046	XMODEN	YMODEN	—	—	BWM<3:0>				YWM<3:0>				XWM<3:0>				0000 0000 0000 0000
XMODSRT	0048	XS<15:1>															0	uuuu uuuu uuuu uuu0
XMODEND	004A	XE<15:1>															1	uuuu uuuu uuuu uuu1
YMODSRT	004C	YS<15:1>															0	uuuu uuuu uuuu uuu0
YMODEND	004E	YE<15:1>															1	uuuu uuuu uuuu uuu1
XBREV	0050	BREN	XB<14:0>															uuuu uuuu uuuu uuuu
DISICNT	0052	—	—	DISICNT<13:0>														0000 0000 0000 0000
BSRAM	0750	—	—	—	—	—	—	—	—	—	—	—	—	—	IW_BSR	IR_BSR	RL_BSR	0000 0000 0000 0000

Legend: u = uninitialized bit

Note: Refer to the "*dsPIC30F Family Reference Manual*" (DS70046) for descriptions of register bit fields.

© 2006-2014 Microchip Technology Inc.

NOTES:

© 2006-2014 Microchip Technology Inc.

4.0 ADDRESS GENERATOR UNITS

Note: This data sheet summarizes features of this group of dsPIC30F devices and is not intended to be a complete reference source. For more information on the CPU, peripherals, register descriptions and general device functionality, refer to the "*dsPIC30F Family Reference Manual*" (DS70046). For more information on the device instruction set and programming, refer to the "*dsPIC30F/33F Programmer's Reference Manual*" (DS70157).

The dsPIC DSC core contains two independent address generator units: the X AGU and Y AGU. The Y AGU supports word sized data reads for the DSP `MAC` class of instructions only. The dsPIC DSC AGUs support three types of data addressing:

- Linear Addressing
- Modulo (Circular) Addressing
- Bit-Reversed Addressing

Linear and Modulo Data Addressing modes can be applied to data space or program space. Bit-Reversed Addressing is only applicable to data space addresses.

4.1 Instruction Addressing Modes

The Addressing modes in Table 4-1 form the basis of the Addressing modes optimized to support the specific features of individual instructions. The Addressing modes provided in the `MAC` class of instructions are somewhat different from those in the other instruction types.

4.1.1 FILE REGISTER INSTRUCTIONS

Most file register instructions use a 13-bit address field (f) to directly address data present in the first 8192 bytes of data memory (near data space). Most file register instructions employ a working register, W0, which is denoted as WREG in these instructions. The destination is typically either the same file register, or WREG (with the exception of the `MUL` instruction), which writes the result to a register or register pair. The `MOV` instruction allows additional flexibility and can access the entire data space.

TABLE 4-1: FUNDAMENTAL ADDRESSING MODES SUPPORTED

Addressing Mode	Description
File Register Direct	The address of the file register is specified explicitly.
Register Direct	The contents of a register are accessed directly.
Register Indirect	The contents of Wn forms the EA.
Register Indirect Post-modified	The contents of Wn forms the EA. Wn is post-modified (incremented or decremented) by a constant value.
Register Indirect Pre-modified	Wn is pre-modified (incremented or decremented) by a signed constant value to form the EA.
Register Indirect with Register Offset	The sum of Wn and Wb forms the EA.
Register Indirect with Literal Offset	The sum of Wn and a literal forms the EA.

4.1.2 MCU INSTRUCTIONS

The three-operand MCU instructions are of the form:

Operand 3 = Operand 1 <function> Operand 2

where Operand 1 is always a working register (i.e., the Addressing mode can only be register direct), which is referred to as Wb. Operand 2 can be a W register, fetched from data memory, or a 5-bit literal. The result location can be either a W register or an address location. The following Addressing modes are supported by MCU instructions:

- Register Direct
- Register Indirect
- Register Indirect Post-modified
- Register Indirect Pre-modified
- 5-bit or 10-bit Literal

Note:	Not all instructions support all the Addressing modes given above. Individual instructions may support different subsets of these Addressing modes.

4.1.3 MOVE AND ACCUMULATOR INSTRUCTIONS

Move instructions and the DSP Accumulator class of instructions provide a greater degree of addressing flexibility than other instructions. In addition to the Addressing modes supported by most MCU instructions, move and accumulator instructions also support Register Indirect with Register Offset Addressing mode, also referred to as Register Indexed mode.

Note:	For the `MOV` instructions, the Addressing mode specified in the instruction can differ for the source and destination EA. However, the 4-bit Wb (Register Offset) field is shared between both source and destination (but typically only used by one).

In summary, the following Addressing modes are supported by move and accumulator instructions:

- Register Direct
- Register Indirect
- Register Indirect Post-modified
- Register Indirect Pre-modified
- Register Indirect with Register Offset (Indexed)
- Register Indirect with Literal Offset
- 8-bit Literal
- 16-bit Literal

Note:	Not all instructions support all the Addressing modes given above. Individual instructions may support different subsets of these Addressing modes.

4.1.4 `MAC` INSTRUCTIONS

The dual source operand DSP instructions (`CLR`, `ED`, `EDAC`, `MAC`, `MPY`, `MPY.N`, `MOVSAC` and `MSC`), also referred to as `MAC` instructions, utilize a simplified set of Addressing modes to allow the user to effectively manipulate the data pointers through register indirect tables.

The two source operand prefetch registers must be a member of the set {W8, W9, W10, W11}. For data reads, W8 and W9 will always be directed to the X RAGU and W10 and W11 will always be directed to the Y AGU. The effective addresses generated (before and after modification) must, therefore, be valid addresses within X data space for W8 and W9 and Y data space for W10 and W11.

Note:	Register Indirect with Register Offset Addressing is only available for W9 (in X space) and W11 (in Y space).

In summary, the following Addressing modes are supported by the `MAC` class of instructions:

- Register Indirect
- Register Indirect Post-modified by 2
- Register Indirect Post-modified by 4
- Register Indirect Post-modified by 6
- Register Indirect with Register Offset (Indexed)

4.1.5 OTHER INSTRUCTIONS

Besides the various Addressing modes outlined above, some instructions use literal constants of various sizes. For example, `BRA` (branch) instructions use 16-bit signed literals to specify the branch destination directly, whereas the `DISI` instruction uses a 14-bit unsigned literal field. In some instructions, such as `ADD Acc`, the source of an operand or result is implied by the opcode itself. Certain operations, such as `NOP`, do not have any operands.

© 2006-2014 Microchip Technology Inc.

4.2 Modulo Addressing

Modulo addressing is a method of providing an automated means to support circular data buffers using hardware. The objective is to remove the need for software to perform data address boundary checks when executing tightly looped code, as is typical in many DSP algorithms.

Modulo addressing can operate in either data or program space (since the data pointer mechanism is essentially the same for both). One circular buffer can be supported in each of the X (which also provides the pointers into program space) and Y data spaces. Modulo addressing can operate on any W register pointer. However, it is not advisable to use W14 or W15 for modulo addressing, since these two registers are used as the Stack Frame Pointer and Stack Pointer, respectively.

In general, any particular circular buffer can only be configured to operate in one direction, as there are certain restrictions on the buffer start address (for incrementing buffers) or end address (for decrementing buffers) based upon the direction of the buffer.

The only exception to the usage restrictions is for buffers which have a power-of-2 length. As these buffers satisfy the start and end address criteria, they may operate in a Bidirectional mode, (i.e., address boundary checks will be performed on both the lower and upper address boundaries).

4.2.1 START AND END ADDRESS

The modulo addressing scheme requires that a starting and an end address be specified and loaded into the 16-bit modulo buffer address registers: XMODSRT, XMODEND, YMODSRT and YMODEND (see Table 3-3).

Note:	Y-space modulo addressing EA calculations assume word sized data (LSb of every EA is always clear).

The length of a circular buffer is not directly specified. It is determined by the difference between the corresponding start and end addresses. The maximum possible length of the circular buffer is 32K words (64 Kbytes).

4.2.2 W ADDRESS REGISTER SELECTION

The Modulo and Bit-Reversed Addressing Control register MODCON<15:0> contains enable flags as well as a W register field to specify the W address registers. The XWM and YWM fields select which registers will operate with modulo addressing. If XWM = 15, X RAGU and X WAGU modulo addressing are disabled. Similarly, if YWM = 15, Y AGU modulo addressing is disabled.

The X Address Space Pointer W register (XWM) to which modulo addressing is to be applied, is stored in MODCON<3:0> (see Table 3-3). Modulo addressing is enabled for X data space when XWM is set to any value other than 15 and the XMODEN bit is set at MODCON<15>.

The Y Address Space Pointer W register (YWM) to which modulo addressing is to be applied, is stored in MODCON<7:4>. Modulo addressing is enabled for Y data space when YWM is set to any value other than 15 and the YMODEN bit is set at MODCON<14>.

FIGURE 4-1: MODULO ADDRESSING OPERATION EXAMPLE

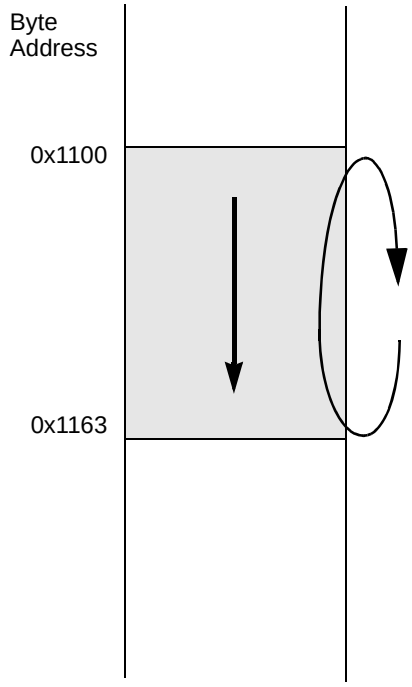


```
MOV     #0x1100,W0
MOV     W0, XMODSRT     ;set modulo start address
MOV     #0x1163,W0
MOV     W0,MODEND       ;set modulo end address
MOV     #0x8001,W0
MOV     W0,MODCON       ;enable W1, X AGU for modulo
MOV     #0x0000,W0      ;W0 holds buffer fill value
MOV     #0x1110,W1      ;point W1 to buffer
DO      AGAIN,#0x31     ;fill the 50 buffer locations
MOV     W0, [W1++]      ;fill the next location
AGAIN:  INC     W0,W0   ;increment the fill value
```

Start Addr = 0x1100
End Addr = 0x1163
Length = 0x0032 words

© 2006-2014 Microchip Technology Inc.

4.2.3 MODULO ADDRESSING APPLICABILITY

Modulo addressing can be applied to the Effective Address (EA) calculation associated with any W register. It is important to realize that the address boundaries check for addresses less than or greater than the upper (for incrementing buffers) and lower (for decrementing buffers) boundary addresses (not just equal to). Address changes may, therefore, jump beyond boundaries and still be adjusted correctly.

Note:	The modulo corrected effective address is written back to the register only when Pre-Modify or Post-Modify Addressing mode is used to compute the Effective Address. When an address offset (e.g., [W7 + W2]) is used, modulo address correction is performed, but the contents of the register remains unchanged.

4.3 Bit-Reversed Addressing

Bit-Reversed Addressing is intended to simplify data re-ordering for radix-2 FFT algorithms. It is supported by the X AGU for data writes only.

The modifier, which may be a constant value or register contents, is regarded as having its bit order reversed. The address source and destination are kept in normal order. Thus, the only operand requiring reversal is the modifier.

4.3.1 BIT-REVERSED ADDRESSING IMPLEMENTATION

Bit-Reversed Addressing is enabled when:

1. BWM (W register selection) in the MODCON register is any value other than 15 (the stack can not be accessed using Bit-Reversed Addressing) **and**
2. the BREN bit is set in the XBREV register **and**
3. the Addressing mode used is Register Indirect with Pre-Increment or Post-Increment.

If the length of a bit-reversed buffer is $M = 2^N$ bytes, then the last ‘N’ bits of the data buffer start address must be zeros.

XB<14:0> is the bit-reversed address modifier or ‘pivot point’ which is typically a constant. In the case of an FFT computation, its value is equal to half of the FFT data buffer size.

Note:	All Bit-Reversed EA calculations assume word sized data (LSb of every EA is always clear). The XB value is scaled accordingly to generate compatible (byte) addresses.

When enabled, Bit-Reversed Addressing will only be executed for register indirect with pre-increment or post-increment addressing and word sized data writes. It will not function for any other Addressing mode or for byte sized data, and normal addresses will be generated instead. When Bit-Reversed Addressing is active, the W Address Pointer will always be added to the address modifier (XB) and the offset associated with the register Indirect Addressing mode will be ignored. In addition, as word sized data is a requirement, the LSb of the EA is ignored (and always clear).

Note:	Modulo addressing and Bit-Reversed Addressing should not be enabled together. In the event that the user attempts to do this, Bit-Reversed Addressing will assume priority when active for the X WAGU, and X WAGU modulo addressing will be disabled. However, modulo addressing will continue to function in the X RAGU.

If Bit-Reversed Addressing has already been enabled by setting the BREN (XBREV<15>) bit, then a write to the XBREV register should not be immediately followed by an indirect read operation using the W register that has been designated as the bit-reversed pointer.

FIGURE 4-2: BIT-REVERSED ADDRESS EXAMPLE

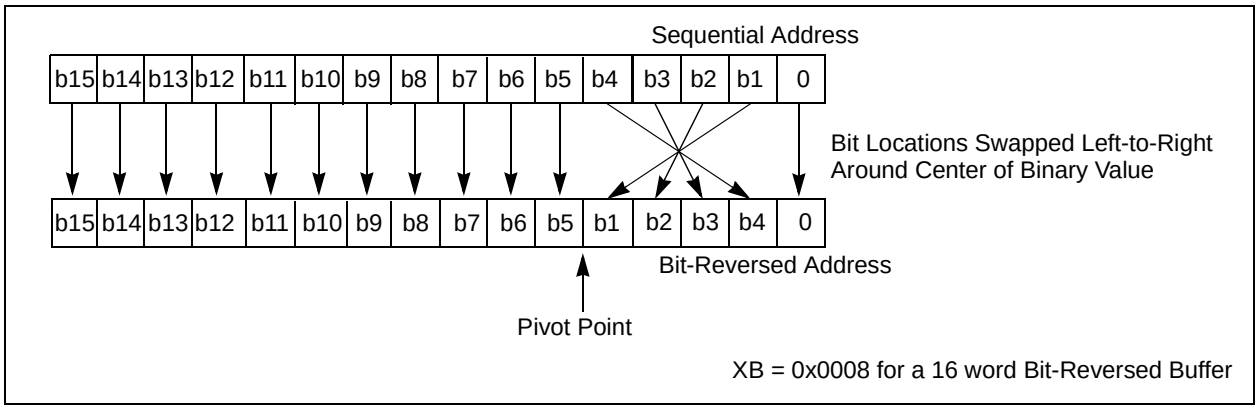

TABLE 4-2: BIT-REVERSED ADDRESS SEQUENCE (16-ENTRY)

Normal Address					Bit-Reversed Address				
A3	A2	A1	A0	Decimal	A3	A2	A1	A0	Decimal
0	0	0	0	0	0	0	0	0	0
0	0	0	1	1	1	0	0	0	8
0	0	1	0	2	0	1	0	0	4
0	0	1	1	3	1	1	0	0	12
0	1	0	0	4	0	0	1	0	2
0	1	0	1	5	1	0	1	0	10
0	1	1	0	6	0	1	1	0	6
0	1	1	1	7	1	1	1	0	14
1	0	0	0	8	0	0	0	1	1
1	0	0	1	9	1	0	0	1	9
1	0	1	0	10	0	1	0	1	5
1	0	1	1	11	1	1	0	1	13
1	1	0	0	12	0	0	1	1	3
1	1	0	1	13	1	0	1	1	11
1	1	1	0	14	0	1	1	1	7
1	1	1	1	15	1	1	1	1	15

TABLE 4-3: BIT-REVERSED ADDRESS MODIFIER VALUES FOR XBREV REGISTER

Buffer Size (Words)	XB<14:0> Bit-Reversed Address Modifier Value(1)
32768	0x4000
16384	0x2000
8192	0x1000
4096	0x0800
2048	0x0400
1024	0x0200
512	0x0100
256	0x0080
128	0x0040
64	0x0020
32	0x0010
16	0x0008
8	0x0004
4	0x0002
2	0x0001

Note 1: Modifier values greater than 256 words exceed the data memory available on the dsPIC30F1010/202X device

© 2006-2014 Microchip Technology Inc.

5.0 INTERRUPTS

Note: This data sheet summarizes features of this group of dsPIC30F devices and is not intended to be a complete reference source. For more information on the CPU, peripherals, register descriptions and general device functionality, refer to the "*dsPIC30F Family Reference Manual*" (DS70046). For more information on the device instruction set and programming, refer to the "*dsPIC30F/33F Programmer's Reference Manual*" (DS70157).

The dsPIC30F1010/202X device has up to 35 interrupt sources and 4 processor exceptions (traps), which must be arbitrated based on a priority scheme.

The CPU is responsible for reading the Interrupt Vector Table (IVT) and transferring the address contained in the interrupt vector to the Program Counter (PC). The interrupt vector is transferred from the program data bus into the Program Counter, via a 24-bit wide multiplexer on the input of the Program Counter.

The Interrupt Vector Table and Alternate Interrupt Vector Table (AIVT) are placed near the beginning of program memory (0x000004). The IVT and AIVT are shown in Figure 5-1.

The interrupt controller is responsible for preprocessing the interrupts and processor exceptions, prior to their being presented to the processor core. The peripheral interrupts and traps are enabled, prioritized and controlled using centralized special function registers:

- IFS0<15:0>, IFS1<15:0>, IFS2<15:0>
  All interrupt request flags are maintained in these three registers. The flags are set by their respective peripherals or external signals, and they are cleared via software.
- IEC0<15:0>, IEC1<15:0>, IEC2<15:0>
  All interrupt enable control bits are maintained in these three registers. These control bits are used to individually enable interrupts from the peripherals or external signals.
- IPC0<15:0>... IPC11<7:0>
  The user-assignable priority level associated with each of these interrupts is held centrally in these twelve registers.
- IPL<3:0> The current CPU priority level is explicitly stored in the IPL bits. IPL<3> is present in the CORCON register, whereas IPL<2:0> are present in the STATUS Register (SR) in the processor core.
- INTCON1<15:0>, INTCON2<15:0>
  Global interrupt control functions are derived from these two registers. INTCON1 contains the control and status flags for the processor exceptions. The INTCON2 register controls the external interrupt request signal behavior and the use of the alternate vector table.
- The INTTREG register contains the associated interrupt vector number and the new CPU interrupt priority level, which are latched into vector number (VECNUM<6:0>) and Interrupt level (ILR<3:0>) bit fields in the INTTREG register. The new interrupt priority level is the priority of the pending interrupt.

Note: Interrupt flag bits get set when an Interrupt condition occurs, regardless of the state of its corresponding enable bit. User software should ensure the appropriate interrupt flag bits are clear prior to enabling an interrupt.

All interrupt sources can be user assigned to one of 7 priority levels, 1 through 7, via the IPCx registers. Each interrupt source is associated with an interrupt vector, as shown in Figure 5-1. Levels 7 and 1 represent the highest and lowest maskable priorities, respectively.

Note: Assigning a priority level of 0 to an interrupt source is equivalent to disabling that interrupt.

If the NSTDIS bit (INTCON1<15>) is set, nesting of interrupts is prevented. Thus, if an interrupt is currently being serviced, processing of a new interrupt is prevented, even if the new interrupt is of higher priority than the one currently being serviced.

Note: The IPL bits become read-only whenever the NSTDIS bit has been set to '1'.

Certain interrupts have specialized control bits for features like edge or level triggered interrupts, interrupt-on-change, etc. Control of these features remains within the peripheral module that generates the interrupt.

The `DISI` instruction can be used to disable the processing of interrupts of priorities 6 and lower for a certain number of instructions, during which the DISI bit (INTCON2<14>) remains set.

When an interrupt is serviced, the PC is loaded with the address stored in the vector location in Program Memory that corresponds to the interrupt. There are 63 different vectors within the IVT (refer to Figure 5-1). These vectors are contained in locations 0x000004 through 0x0000FE of program memory (refer to Figure 5-1). These locations contain 24-bit addresses, and, in order to preserve robustness, an address error trap will take place should the PC attempt to fetch any of these words during normal execution. This prevents execution of random data as a result of accidentally decrementing a PC into vector space, accidentally mapping a data space address into vector space, or the PC rolling over to 0x000000 after reaching the end of implemented program memory space. Execution of a `GOTO` instruction to this vector space will also generate an address error trap.

5.1 Interrupt Priority

The user-assignable Interrupt Priority (IP<2:0>) bits for each individual interrupt source are located in the Least Significant 3 bits of each nibble, within the IPCx register(s). Bit 3 of each nibble is not used and is read as a '0'. These bits define the priority level assigned to a particular interrupt by the user.

> **Note:** The user selectable priority levels start at 0, as the lowest priority, and level 7, as the highest priority.

Since more than one interrupt request source may be assigned to a specific user specified priority level, a means is provided to assign priority within a given level. This method is called "Natural Order Priority" and is final.

Natural order priority is determined by the position of an interrupt in the vector table, and only affects interrupt operation when multiple interrupts with the same user-assigned priority become pending at the same time.

Table 5-1 lists the interrupt numbers and interrupt sources for the dsPIC DSC devices and their associated vector numbers.

> **Note 1:** The natural order priority scheme has 0 as the highest priority and 53 as the lowest priority.
>
> **2:** The natural order priority number is the same as the INT number.

The ability for the user to assign every interrupt to one of seven priority levels implies that the user can assign a very high overall priority level to an interrupt with a low natural order priority. The INT0 (external interrupt 0) may be assigned to priority level 1, thus giving it a very low effective priority.

TABLE 5-1: dsPIC30F1010/202X INTERRUPT VECTOR TABLE

INT Number	Vector Number	Interrupt Source
Highest Natural Order Priority		
0	8	INT0 – External Interrupt 0
1	9	IC1 – Input Capture 1
2	10	OC1 – Output Compare 1
3	11	T1 – Timer 1
4	12	Reserved
5	13	OC2 – Output Compare 2
6	14	T2 – Timer 2
7	15	T3 – Timer 3
8	16	SPI1
9	17	U1RX – UART1 Receiver
10	18	U1TX – UART1 Transmitter
11	19	ADC – ADC Convert Done
12	20	NVM – NVM Write Complete
13	21	SI2C – I^2C™ Slave Event
14	22	MI2C – I^2C Master Event
15	23	Reserved
16	24	INT1 – External Interrupt 1
17	25	INT2 – External Interrupt 2
18	26	PWM Special Event Trigger
19	27	PWM Gen#1
20	28	PWM Gen#2
21	29	PWM Gen#3
22	30	PWM Gen#4
23	31	Reserved
24	32	Reserved
25	33	Reserved
26	34	Reserved
27	35	CN – Input Change Notification
28	36	Reserved
29	37	Analog Comparator 1
30	38	Analog Comparator 2
31	39	Analog Comparator 3
32	40	Analog Comparator 4
33	41	Reserved
34	42	Reserved
35	43	Reserved
36	44	Reserved
37	45	ADC Pair 0 Conversion Done
38	46	ADC Pair 1 Conversion Done
39	47	ADC Pair 2 Conversion Done
40	48	ADC Pair 3 Conversion Done
41	49	ADC Pair 4 Conversion Done
42	50	ADC Pair 5 Conversion Done
43	51	Reserved
44	52	Reserved
45-53	53-61	Reserved
Lowest Natural Order Priority		

© 2006-2014 Microchip Technology Inc.

5.2 Reset Sequence

A Reset is not a true exception, because the interrupt controller is not involved in the Reset process. The processor initializes its registers in response to a Reset, which forces the PC to zero. The processor then begins program execution at location 0x000000. A `GOTO` instruction is stored in the first program memory location, immediately followed by the address target for the `GOTO` instruction. The processor executes the `GOTO` to the specified address and then begins operation at the specified target (start) address.

5.2.1 RESET SOURCES

In addition to External Reset and Power-on Reset (POR), there are 6 sources of error conditions which 'trap' to the Reset vector.

- Watchdog Time-out:
  The watchdog has timed out, indicating that the processor is no longer executing the correct flow of code.
- Uninitialized W Register Trap:
  An attempt to use an uninitialized W register as an Address Pointer will cause a Reset.
- Illegal Instruction Trap:
  Attempted execution of any unused opcodes will result in an illegal instruction trap. Note that a fetch of an illegal instruction does not result in an illegal instruction trap if that instruction is flushed prior to execution due to a flow change.
- Trap Lockout:
  Occurrence of multiple Trap conditions simultaneously will cause a Reset.

5.3 Traps

Traps can be considered as non-maskable interrupts indicating a software or hardware error, which adhere to a predefined priority as shown in Figure 5-1. They are intended to provide the user a means to correct erroneous operation during debug and when operating within the application.

Note:	If the user does not intend to take corrective action in the event of a Trap Error condition, these vectors must be loaded with the address of a default handler that simply contains the `RESET` instruction. If, on the other hand, one of the vectors containing an invalid address is called, an address error trap is generated.

Note that many of these trap conditions can only be detected when they occur. Consequently, the questionable instruction is allowed to complete prior to trap exception processing. If the user chooses to recover from the error, the result of the erroneous action that caused the trap may have to be corrected.

There are 8 fixed priority levels for traps: Level 8 through Level 15, which implies that the IPL3 is always set during processing of a trap.

If the user is not currently executing a trap, and he sets the IPL<3:0> bits to a value of '`0111`' (Level 7), then all interrupts are disabled, but traps can still be processed.

5.3.1 TRAP SOURCES

The following traps are provided with increasing priority. However, since all traps can be nested, priority has little effect.

Math Error Trap:

The Math Error trap executes under the following four circumstances:

1. Should an attempt be made to divide by zero, the divide operation will be aborted on a cycle boundary and the trap taken.
2. If enabled, a Math Error trap will be taken when an arithmetic operation on either accumulator A or B causes an overflow from bit 31 and the accumulator guard bits are not utilized.
3. If enabled, a Math Error trap will be taken when an arithmetic operation on either accumulator A or B causes a catastrophic overflow from bit 39 and all saturation is disabled.
4. If the shift amount specified in a shift instruction is greater than the maximum allowed shift amount, a trap will occur.

Address Error Trap:

This trap is initiated when any of the following circumstances occurs:

1. A misaligned data word access is attempted.
2. A data fetch from our unimplemented data memory location is attempted.
3. A data access of an unimplemented program memory location is attempted.
4. An instruction fetch from vector space is attempted.

Note:	In the `MAC` class of instructions, wherein the data space is split into X and Y data space, unimplemented X space includes all of Y space, and unimplemented Y space includes all of X space.

5. Execution of a "`BRA #literal`" instruction or a "`GOTO #literal`" instruction, where `literal` is an unimplemented program memory address.
6. Executing instructions after modifying the PC to point to unimplemented program memory addresses. The PC may be modified by loading a value into the stack and executing a `RETURN` instruction.

Stack Error Trap:

This trap is initiated under the following conditions:

1. The Stack Pointer is loaded with a value which is greater than the (user-programmable) limit value written into the SPLIM register (stack overflow).
2. The Stack Pointer is loaded with a value which is less than 0x0800 (simple stack underflow).

Oscillator Fail Trap:

This trap is initiated if the external oscillator fails and operation becomes reliant on an internal RC backup.

5.3.2 HARD AND SOFT TRAPS

It is possible that multiple traps can become active within the same cycle (e.g., a misaligned word stack write to an overflowed address). In such a case, the fixed priority shown in Figure 5-1 is implemented, which may require the user to check if other traps are pending, in order to completely correct the fault.

'Soft' traps include exceptions of priority level 8 through level 11, inclusive. The arithmetic error trap (level 11) falls into this category of traps.

'Hard' traps include exceptions of priority level 12 through level 15, inclusive. The address error (level 12), stack error (level 13) and oscillator error (level 14) traps fall into this category.

Each hard trap that occurs must be acknowledged before code execution of any type may continue. If a lower priority hard trap occurs while a higher priority trap is pending, acknowledged, or is being processed, a hard trap conflict will occur.

The device is automatically Reset in a hard trap conflict condition. The TRAPR Status bit (RCON<15>) is set when the Reset occurs, so that the condition may be detected in software.

FIGURE 5-1: TRAP VECTORS

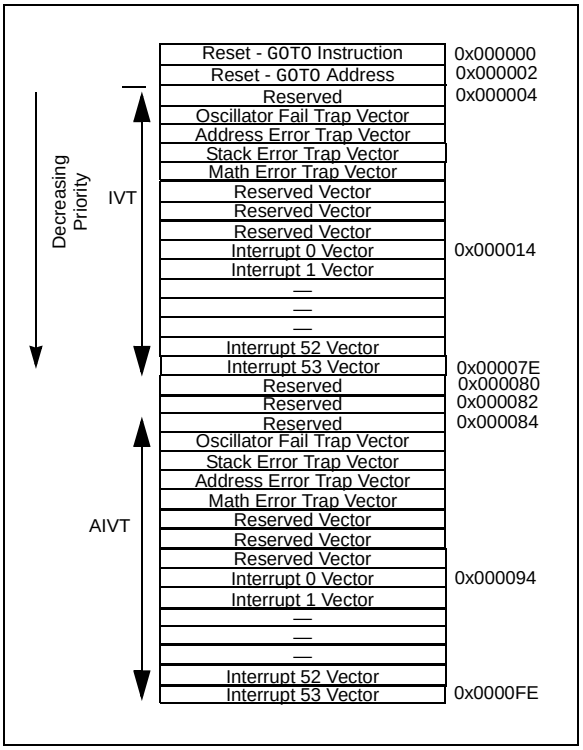

© 2006-2014 Microchip Technology Inc.

5.4 Interrupt Sequence

All interrupt event flags are sampled in the beginning of each instruction cycle by the IFSx registers. A pending interrupt request (IRQ) is indicated by the flag bit being equal to a ‘1’ in an IFSx register. The IRQ will cause an interrupt to occur if the corresponding bit in the interrupt enable (IECx) register is set. For the remainder of the instruction cycle, the priorities of all pending interrupt requests are evaluated.

If there is a pending IRQ with a priority level greater than the current processor priority level in the IPL bits, the processor will be interrupted.

The processor then stacks the current Program Counter and the low byte of the processor STATUS Register (SRL), as shown in Figure 5-2. The low byte of the STATUS register contains the processor priority level at the time, prior to the beginning of the interrupt cycle. The processor then loads the priority level for this interrupt into the STATUS register. This action will disable all lower priority interrupts until the completion of the Interrupt Service Routine (ISR).

FIGURE 5-2: INTERRUPT STACK FRAME

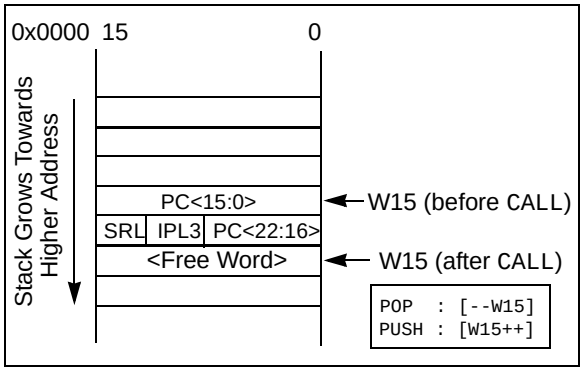

Note 1:	The user can always lower the priority level by writing a new value into SR. The Interrupt Service Routine must clear the interrupt flag bits in the IFSx register before lowering the processor interrupt priority, in order to avoid recursive interrupts.
2:	The IPL3 bit (CORCON<3>) is always clear when interrupts are being processed. It is set only during execution of traps.

The `RETFIE` (Return from Interrupt) instruction will unstack the Program Counter and status registers to return the processor to its state prior to the interrupt sequence.

5.5 Alternate Vector Table

In Program Memory, the IVT is followed by the AIVT, as shown in Figure 5-1. Access to the Alternate Vector Table is provided by the ALTIVT bit in the INTCON2 register. If the ALTIVT bit is set, all interrupt and exception processes will use the alternate vectors instead of the default vectors. The alternate vectors are organized in the same manner as the default vectors. The AIVT supports emulation and debugging efforts by providing a means to switch between an application and a support environment, without requiring the interrupt vectors to be reprogrammed. This feature also enables switching between applications for evaluation of different software algorithms at run time.

If the AIVT is not required, the program memory allocated to the AIVT may be used for other purposes. AIVT is not a protected section and may be freely programmed by the user.

5.6 Fast Context Saving

A context saving option is available using shadow registers. Shadow registers are provided for the DC, N, OV, Z and C bits in SR, and the registers W0 through W3. The shadows are only one level deep. The shadow registers are accessible using the `PUSH.S` and `POP.S` instructions only.

When the processor vectors to an interrupt, the `PUSH.S` instruction can be used to store the current value of the aforementioned registers into their respective shadow registers.

If an ISR of a certain priority uses the `PUSH.S` and `POP.S` instructions for fast context saving, then a higher priority ISR should not include the same instructions. Users must save the key registers in software during a lower priority interrupt, if the higher priority ISR uses fast context saving.

5.7 External Interrupt Requests

The interrupt controller supports three external interrupt request signals, INT0-INT2. These inputs are edge sensitive; they require a low-to-high or a high-to-low transition to generate an interrupt request. The INTCON2 register has three bits, INT0EP-INT2EP, that select the polarity of the edge detection circuitry.

5.8 Wake-up from Sleep and Idle

The interrupt controller may be used to wake-up the processor from either Sleep or Idle modes, if Sleep or Idle mode is active when the interrupt is generated.

If an enabled interrupt request of sufficient priority is received by the interrupt controller, then the standard interrupt request is presented to the processor. At the same time, the processor will wake-up from Sleep or Idle and begin execution of the Interrupt Service Routine needed to process the interrupt request.

REGISTER 5-1: INTCON1: INTERRUPT CONTROL REGISTER 1

R/W-0	R/W-0	R/W-0	R/W-0	R/W-0	R/W-0	R/W-0	R/W-0
NSTDIS	OVAERR	OVBERR	COVAERR	COVBERR	OVATE	OVBTE	COVTE
bit 15							bit 8

R/W-0	R/W-0	U-0	R/W-0	R/W-0	R/W-0	R/W-0	U-0
SFTACERR	DIV0ERR	—	MATHERR	ADDRERR	STKERR	OSCFAIL	—
bit 7							bit 0

Legend:			
R = Readable bit	W = Writable bit	U = Unimplemented bit, read as ‘0’	
-n = Value at POR	‘1’ = Bit is set	‘0’ = Bit is cleared	x = Bit is unknown

bit 15 **NSTDIS:** Interrupt Nesting Disable bit
1 = Interrupt nesting is disabled
0 = Interrupt nesting is enabled

bit 14 **OVAERR:** Accumulator A Overflow Trap Flag bit
1 = Trap was caused by overflow of Accumulator A
0 = Trap was not caused by overflow of Accumulator A

bit 13 **OVBERR:** Accumulator B Overflow Trap Flag bit
1 = Trap was caused by overflow of Accumulator B
0 = Trap was not caused by overflow of Accumulator B

bit 12 **COVAERR:** Accumulator A Catastrophic Overflow Trap Enable bit
1 = Trap was caused by catastrophic overflow of Accumulator A
0 = Trap was not caused by catastrophic overflow of Accumulator A

bit 11 **COVBERR:** Accumulator B Catastrophic Overflow Trap Enable bit
1 = Trap was caused by catastrophic overflow of Accumulator B
0 = Trap was not caused by catastrophic overflow of Accumulator B

bit 10 **OVATE:** Accumulator A Overflow Trap Enable bit
1 = Trap overflow of Accumulator A
0 = Trap disabled

bit 9 **OVBTE:** Accumulator B Overflow Trap Enable bit
1 = Trap overflow of Accumulator B
0 = Trap disabled

bit 8 **COVTE:** Catastrophic Overflow Trap Enable bit
1 = Trap on catastrophic overflow of Accumulator A or B enabled
0 = Trap disabled

bit 7 **SFTACERR:** Shift Accumulator Error Status bit
1 = Math error trap was caused by an invalid accumulator shift
0 = Math error trap was not caused by an invalid accumulator shift

bit 6 **DIV0ERR:** Arithmetic Error Status bit
1 = Math error trap was caused by a divided by zero
0 = Math error trap was not caused by an invalid accumulator shift

bit 5 **Unimplemented:** Read as ‘0’

bit 4 **MATHERR:** Arithmetic Error Status bit
1 = Overflow trap has occurred
0 = Overflow trap has not occurred

bit 3 **ADDRERR:** Address Error Trap Status bit
1 = Address error trap has occurred
0 = Address error trap has not occurred

© 2006-2014 Microchip Technology Inc.

REGISTER 5-1: INTCON1: INTERRUPT CONTROL REGISTER 1 (CONTINUED)

bit 2	**STKERR:** Stack Error Trap Status bit 1 = Stack error trap has occurred 0 = Stack error trap has not occurred
bit 1	**OSCFAIL:** Oscillator Failure Trap Status bit 1 = Oscillator failure trap has occurred 0 = Oscillator failure trap has not occurred
bit 0	**Unimplemented:** Read as ‘0’

REGISTER 5-2: INTCON2: INTERRUPT CONTROL REGISTER 2

R/W-0	R-0	U-0	U-0	U-0	U-0	U-0	U-0
ALTIVT	DISI	—	—	—	—	—	—
bit 15							bit 8

U-0	U-0	U-0	U-0	U-0	R/W-0	R/W-0	R/W-0
—	—	—	—	—	INT2EP	INT1EP	INT0EP
bit 7							bit 0

Legend:			
R = Readable bit	W = Writable bit	U = Unimplemented bit, read as ‘0’	
-n = Value at POR	‘1’ = Bit is set	‘0’ = Bit is cleared	x = Bit is unknown

bit 15 **ALTIVT:** Enable Alternate Interrupt Vector Table bit
`1` = Use alternate vector table
`0` = Use standard (default) vector table

bit 14 **DISI:** `DISI` Instruction Status bit
`1` = `DISI` instruction is active
`0` = `DISI` instruction is not active

bit 13-3 **Unimplemented:** Read as ‘`0`’

bit 2 **INT2EP:** External Interrupt 2 Edge Detect Polarity Select bit
`1` = Interrupt on negative edge
`0` = Interrupt on positive edge

bit 1 **INT1EP:** External Interrupt 1 Edge Detect Polarity Select bit
`1` = Interrupt on negative edge
`0` = Interrupt on positive edge

bit 0 **INT0EP:** External Interrupt 0 Edge Detect Polarity Select bit
`1` = Interrupt on negative edge
`0` = Interrupt on positive edge

© 2006-2014 Microchip Technology Inc.

REGISTER 5-3: IFS0: INTERRUPT FLAG STATUS REGISTER 0

U-0	R/W-0	R/W-0	R/W-0	R/W-0	R/W-0	R/W-0	R/W-0
—	MI2CIF	SI2CIF	NVMIF	ADIF	U1TXIF	U1RXIF	SPI1IF
bit 15							bit 8

R/W-0	R/W-0	R/W-0	U-0	R/W-0	R/W-0	R/W-0	R/W-0
T3IF	T2IF	OC2IF	—	T1IF	OC1IF	IC1IF	INT0IF
bit 7							bit 0

Legend:			
R = Readable bit	W = Writable bit	U = Unimplemented bit, read as ‘0’	
-n = Value at POR	‘1’ = Bit is set	‘0’ = Bit is cleared	x = Bit is unknown

bit 15 **Unimplemented:** Read as ‘0’

bit 14 **MI2CIF:** I^2C Master Events Interrupt Flag Status bit
1 = Interrupt request has occurred
0 = Interrupt request has not occurred

bit 13 **SI2CIF:** I^2C Slave Events Interrupt Flag Status bit
1 = Interrupt request has occurred
0 = Interrupt request has not occurred

bit 12 **NVMIF:** Nonvolatile Memory Interrupt Flag Status bit
1 = Interrupt request has occurred
0 = Interrupt request has not occurred

bit 11 **ADIF:** ADC Conversion Complete Interrupt Flag Status bit
1 = Interrupt request has occurred
0 = Interrupt request has not occurred

bit 10 **U1TXIF:** UART1 Transmitter Interrupt Flag Status bit
1 = Interrupt request has occurred
0 = Interrupt request has not occurred

bit 9 **U1RXIF:** UART1 Receiver Interrupt Flag Status bit
1 = Interrupt request has occurred
0 = Interrupt request has not occurred

bit 8 **SPI1IF:** SPI1 Event Interrupt Flag Status bit
1 = Interrupt request has occurred
0 = Interrupt request has not occurred

bit 7 **T3IF:** Timer3 Interrupt Flag Status bit
1 = Interrupt request has occurred
0 = Interrupt request has not occurred

bit 6 **T2IF:** Timer2 Interrupt Flag Status bit
1 = Interrupt request has occurred
0 = Interrupt request has not occurred

bit 5 **OC2IF:** Output Compare Channel 2 Interrupt Flag Status bit
1 = Interrupt request has occurred
0 = Interrupt request has not occurred

bit 4 **Unimplemented:** Read as ‘0’

bit 3 **T1IF:** Timer1 Interrupt Flag Status bit
1 = Interrupt request has occurred
0 = Interrupt request has not occurred

REGISTER 5-3: IFS0: INTERRUPT FLAG STATUS REGISTER 0 (CONTINUED)

bit 2 **OC1IF:** Output Compare Channel 1 Interrupt Flag Status bit
1 = Interrupt request has occurred
0 = Interrupt request has not occurred

bit 1 **IC1IF:** Input Capture Channel 1 Interrupt Flag Status bit
1 = Interrupt request has occurred
0 = Interrupt request has not occurred

bit 0 **INT0IF:** External Interrupt 0 Flag Status bit
1 = Interrupt request has occurred
0 = Interrupt request has not occurred

© 2006-2014 Microchip Technology Inc.

REGISTER 5-4: IFS1: INTERRUPT FLAG STATUS REGISTER 1

R/W-0	R/W-0	R/W-0	U-0	R/W-0	U-0	U-0	U-0
AC3IF	AC2IF	AC1IF	—	CNIF	—	—	—
bit 15							bit 8

U-0	R/W-0	R/W-0	R/W-0	R/W-0	R/W-0	R/W-0	R/W-0
—	PWM4IF	PWM3IF	PWM2IF	PWM1IF	PSEMIF	INT2IF	INT1IF
bit 7							bit 0

Legend:			
R = Readable bit	W = Writable bit	U = Unimplemented bit, read as ‘0’	
-n = Value at POR	‘1’ = Bit is set	‘0’ = Bit is cleared	x = Bit is unknown

bit 15 **AC3IF:** Analog Comparator #3 Interrupt Flag Status bit
1 = Interrupt request has occurred
0 = Interrupt request has not occurred

bit 14 **AC2IF:** Analog Comparator #2 Interrupt Flag Status bit
1 = Interrupt request has occurred
0 = Interrupt request has not occurred

bit 13 **AC1IF:** Analog Comparator #1 Interrupt Flag Status bit
1 = Interrupt request has occurred
0 = Interrupt request has not occurred

bit 12 **Unimplemented:** Read as ‘0’

bit 11 **CNIF:** Input Change Notification Interrupt Flag Status bit
1 = Interrupt request has occurred
0 = Interrupt request has not occurred

bit 10-7 **Unimplemented:** Read as ‘0’

bit 6 **PWM4IF:** Pulse Width Modulation Generator #4 Interrupt Flag Status bit
1 = Interrupt request has occurred
0 = Interrupt request has not occurred

bit 5 **PWM3IF:** Pulse Width Modulation Generator #3 Interrupt Flag Status bit
1 = Interrupt request has occurred
0 = Interrupt request has not occurred

bit 4 **PWM2IF:** Pulse Width Modulation Generator #2 Interrupt Flag Status bit
1 = Interrupt request has occurred
0 = Interrupt request has not occurred

bit 3 **PWM1IF:** Pulse Width Modulation Generator #1 Interrupt Flag Status bit
1 = Interrupt request has occurred
0 = Interrupt request has not occurred

bit 2 **PSEMIF:** PWM Special Event Match Interrupt Flag Status bit
1 = Interrupt request has occurred
0 = Interrupt request has not occurred

bit 1 **INT2IF:** External Interrupt 2 Flag Status bit
1 = Interrupt request has occurred
0 = Interrupt request has not occurred

bit 0 **INT1IF:** External Interrupt 1 Flag Status bit
1 = Interrupt request has occurred
0 = Interrupt request has not occurred

REGISTER 5-5: IFS2: INTERRUPT FLAG STATUS REGISTER 2

U-0	U-0	U-0	U-0	U-0	R/W-0	R/W-00	R/W-0
—	—	—	—	—	ADCP5IF	ADCP4IF	ADCP3IF
bit 15							bit 8

R/W-0	R/W-0	R/W-0	U-0	U-0	U-0	U-0	R/W-0
ADCP2IF	ADCP1IF	ADCP0IF	—	—	—	—	AC4IF
bit 7							bit 0

Legend:			
R = Readable bit	W = Writable bit	U = Unimplemented bit, read as ‘0’	
-n = Value at POR	‘1’ = Bit is set	‘0’ = Bit is cleared	x = Bit is unknown

bit 15-11 **Unimplemented:** Read as ‘0’

bit 10 **ADCP5IF:** ADC Pair 5 Conversion Done Interrupt Flag Status bit
1 = Interrupt request has occurred
0 = Interrupt request has not occurred

bit 9 **ADCP4IF:** ADC Pair 4 Conversion Done Interrupt Flag Status bit
1 = Interrupt request has occurred
0 = Interrupt request has not occurred

bit 8 **ADCP3IF:** ADC Pair 3 Conversion Done Interrupt Flag Status bit
1 = Interrupt request has occurred
0 = Interrupt request has not occurred

bit 7 **ADCP2IF:** ADC Pair 2 Conversion Done Interrupt Flag Status bit
1 = Interrupt request has occurred
0 = Interrupt request has not occurred

bit 6 **ADCP1IF:** ADC Pair 1 Conversion Done Interrupt Flag Status bit
1 = Interrupt request has occurred
0 = Interrupt request has not occurred

bit 5 **ADCP0IF:** ADC Pair 0 Conversion Done Interrupt Flag Status bit
1 = Interrupt request has occurred
0 = Interrupt request has not occurred

bit 4-1 **Unimplemented:** Read as ‘0’

bit 0 **AC4IF:** Analog Comparator #4 Interrupt Flag Status bit
1 = Interrupt request has occurred
0 = Interrupt request has not occurred

© 2006-2014 Microchip Technology Inc.

REGISTER 5-6: IEC0: INTERRUPT ENABLE CONTROL REGISTER 0

U-0	R/W-0	R/W-0	R/W-0	R/W-0	R/W-0	R/W-0	R/W-0
—	MI2CIE	SI2CIE	NVMIE	ADIE	U1TXIE	U1RXIE	SPI1IE
bit 15							bit 8

R/W-0	R/W-0	R/W-0	U-0	R/W-0	R/W-0	R/W-0	R/W-0
T3IE	T2IE	OC2IE	—	T1IE	OC1IE	IC1IE	INT0IE
bit 7							bit 0

Legend:			
R = Readable bit	W = Writable bit	U = Unimplemented bit, read as ‘0’	
-n = Value at POR	‘1’ = Bit is set	‘0’ = Bit is cleared	x = Bit is unknown

bit 15 **Unimplemented:** Read as ‘0’

bit 14 **MI2CIE:** I^2C Master Events Interrupt Enable bit
1 = Interrupt request enabled
0 = Interrupt request not enabled

bit 13 **SI2CIE:** I^2C Slave Events Interrupt Enable bit
1 = Interrupt request enabled
0 = Interrupt request not enabled

bit 12 **NVMIE:** Nonvolatile Memory Interrupt Enable bit
1 = Interrupt request enabled
0 = Interrupt request not enabled

bit 11 **ADIE:** ADC Conversion Complete Interrupt Enable bit
1 = Interrupt request enabled
0 = Interrupt request not enabled

bit 10 **U1TXIE:** UART1 Transmitter Interrupt Enable bit
1 = Interrupt request enabled
0 = Interrupt request not enabled

bit 9 **U1RXIE:** UART1 Receiver Interrupt Enable bit
1 = Interrupt request enabled
0 = Interrupt request not enabled

bit 8 **SPI1IE:** SPI1 Event Interrupt Enable bit
1 = Interrupt request enabled
0 = Interrupt request not enabled

bit 7 **T3IE:** Timer3 Interrupt Enable bit
1 = Interrupt request enabled
0 = Interrupt request not enabled

bit 6 **T2IE:** Timer2 Interrupt Enable bit
1 = Interrupt request enabled
0 = Interrupt request not enabled

bit 5 **OC2IE:** Output Compare Channel 2 Interrupt Enable bit
1 = Interrupt request enabled
0 = Interrupt request not enabled

bit 4 **Unimplemented:** Read as ‘0’

bit 3 **T1IE:** Timer1 Interrupt Enable bit
1 = Interrupt request enabled
0 = Interrupt request not enabled

REGISTER 5-6: IEC0: INTERRUPT ENABLE CONTROL REGISTER 0 (CONTINUED)

bit 2 **OC1IE:** Output Compare Channel 1 Interrupt Enable bit
1 = Interrupt request enabled
0 = Interrupt request not enabled

bit 1 **IC1IE:** Input Capture Channel 1 Interrupt Enable bit
1 = Interrupt request enabled
0 = Interrupt request not enabled

bit 0 **INT0IE:** External Interrupt 0 Enable bit
1 = Interrupt request enabled
0 = Interrupt request not enabled

© 2006-2014 Microchip Technology Inc.

REGISTER 5-7: IEC1: INTERRUPT ENABLE CONTROL REGISTER 1

R/W-0	R/W-0	R/W-0	U-0	R/W-0	U-0	U-0	U-0
AC3IE	AC2IE	AC1IE	—	CNIE	—	—	—
bit 15							bit 8

U-0	R/W-0	R/W-0	R/W-0	R/W-0	R/W-0	R/W-0	R/W-0
—	PWM4IE	PWM3IE	PWM2IE	PWM1IE	PSEMIE	INT2IE	INT1IE
bit 7							bit 0

Legend:			
R = Readable bit	W = Writable bit	U = Unimplemented bit, read as ‘0’	
-n = Value at POR	‘1’ = Bit is set	‘0’ = Bit is cleared	x = Bit is unknown

bit 15 **AC3IE:** Analog Comparator #3 Interrupt Enable bit
1 = Interrupt request enabled
0 = Interrupt request not enabled

bit 14 **AC2IE:** Analog Comparator #2 Interrupt Enable bit
1 = Interrupt request enabled
0 = Interrupt request not enabled

bit 13 **AC1IE:** Analog Comparator #1 Interrupt Enable bit
1 = Interrupt request enabled
0 = Interrupt request not enabled

bit 12 **Unimplemented:** Read as ‘0’

bit 11 **CNIE:** Input Change Notification Interrupt Enable bit
1 = Interrupt request enabled
0 = Interrupt request not enabled

bit 10-7 **Unimplemented:** Read as ‘0’

bit 6 **PWM4IE:** Pulse Width Modulation Generator #4 Interrupt Enable bit
1 = Interrupt request enabled
0 = Interrupt request not enabled

bit 5 **PWM3IE:** Pulse Width Modulation Generator #3 Interrupt Enable bit
1 = Interrupt request enabled
0 = Interrupt request not enabled

bit 4 **PWM2IE:** Pulse Width Modulation Generator #2 Interrupt Enable bit
1 = Interrupt request enabled
0 = Interrupt request not enabled

bit 3 **PWM1IE:** Pulse Width Modulation Generator #1 Interrupt Enable bit
1 = Interrupt request enabled
0 = Interrupt request not enabled

bit 2 **PSEMIE:** PWM Special Event Match Interrupt Enable bit
1 = Interrupt request enabled
0 = Interrupt request not enabled

bit 1 **INT2IE:** External Interrupt 2 Enable bit
1 = Interrupt request enabled
0 = Interrupt request not enabled

bit 0 **INT1IE:** External Interrupt 1 Enable bit
1 = Interrupt request enabled
0 = Interrupt request not enabled

REGISTER 5-8: IEC2: INTERRUPT ENABLE CONTROL REGISTER 2

U-0	U-0	U-0	U-0	U-0	R/W-0	R/W-0	R/W-0
—	—	—	—	—	ADCP5IE	ADCP4IE	ADCP3IE
bit 15							bit 8

R/W-0	R/W-0	R/W-0	U-0	U-0	U-0	U-0	R/W-0
ADCP2IE	ADCP1IE	ADCP0IE	—	—	—	—	AC4IE
bit 7							bit 0

Legend:			
R = Readable bit	W = Writable bit	U = Unimplemented bit, read as ‘0’	
-n = Value at POR	‘1’ = Bit is set	‘0’ = Bit is cleared	x = Bit is unknown

bit 15-11 **Unimplemented:** Read as ‘0’

bit 10 **ADCP5IE:** ADC Pair 5 Conversion done Interrupt Enable bit
1 = Interrupt request enabled
0 = Interrupt request not enabled

bit 9 **ADCP4IE:** ADC Pair 4 Conversion done Interrupt Enable bit
1 = Interrupt request enabled
0 = Interrupt request not enabled

bit 8 **ADCP3IE:** ADC Pair 3 Conversion done Interrupt Enable bit
1 = Interrupt request enabled
0 = Interrupt request not enabled

bit 7 **ADCP2IE:** ADC Pair 2 Conversion done Interrupt Enable bit
1 = Interrupt request enabled
0 = Interrupt request not enabled

bit 6 **ADCP1IE:** ADC Pair 1 Conversion done Interrupt Enable bit
1 = Interrupt request enabled
0 = Interrupt request not enabled

bit 5 **ADCP0IE:** ADC Pair 0 Conversion done Interrupt Enable bit
1 = Interrupt request enabled
0 = Interrupt request not enabled

bit 4-1 **Unimplemented:** Read as ‘0’

bit 0 **AC4IE:** Analog Comparator #4 Interrupt Enable bit
1 = Interrupt request enabled
0 = Interrupt request not enabled

© 2006-2014 Microchip Technology Inc.

REGISTER 5-9: IPC0: INTERRUPT PRIORITY CONTROL REGISTER 0

U-0	R/W-1	R/W-0	R/W-0	U-0	R/W-1	R/W-0	R/W-0
—	T1IP<2:0>			—	OC1IP<2:0>		
bit 15							bit 8

U-0	R/W-1	R/W-0	R/W-0	U-0	R/W-1	R/W-0	R/W-0
—	IC1IP<2:0>			—	INT0IP<2:0>		
bit 7							bit 0

Legend:			
R = Readable bit	W = Writable bit	U = Unimplemented bit, read as ‘0’	
-n = Value at POR	‘1’ = Bit is set	‘0’ = Bit is cleared	x = Bit is unknown

bit 15 **Unimplemented:** Read as ‘0’

bit 14-12 **T1IP<2:0>:** Timer1 Interrupt Priority bits
111 = Interrupt is priority 7 (highest priority interrupt)
•
•
•
001 = Interrupt is priority 1
000 = Interrupt source is disabled

bit 11 **Unimplemented:** Read as ‘0’

bit 10-8 **OC1IP<2:0>:** Output Compare Channel 1 Interrupt Priority bits
111 = Interrupt is priority 7 (highest priority interrupt)
•
•
•
001 = Interrupt is priority 1
000 = Interrupt source is disabled

bit 7 **Unimplemented:** Read as ‘0’

bit 6-4 **IC1IP<2:0>:** Input Capture Channel 1 Interrupt Priority bits
111 = Interrupt is priority 7 (highest priority interrupt)
•
•
•
001 = Interrupt is priority 1
000 = Interrupt source is disabled

bit 3 **Unimplemented:** Read as ‘0’

bit 2-0 **INT0IP<2:0>:** External Interrupt 0 Priority bits
111 = Interrupt is priority 7 (highest priority interrupt)
•
•
•
001 = Interrupt is priority 1
000 = Interrupt source is disabled

REGISTER 5-10: IPC1: INTERRUPT PRIORITY CONTROL REGISTER 1

U-0	R/W-1	R/W-0	R/W-0	U-0	R/W-1	R/W-0	R/W-0
—	T3IP<2:0>			—	T2IP<2:0>		
bit 15							bit 8

U-0	R/W-1	R/W-0	R/W-0	U-0	U-0	U-0	U-0
—	OC2IP<2:0>			—	—	—	—
bit 7							bit 0

Legend:			
R = Readable bit	W = Writable bit	U = Unimplemented bit, read as ‘0’	
-n = Value at POR	‘1’ = Bit is set	‘0’ = Bit is cleared	x = Bit is unknown

bit 15 **Unimplemented:** Read as ‘0’

bit 14-12 **T3IP<2:0>:** Timer3 Interrupt Priority bits
111 = Interrupt is priority 7 (highest priority interrupt)
•
•
•
001 = Interrupt is priority 1
000 = Interrupt source is disabled

bit 11 **Unimplemented:** Read as ‘0’

bit 10-8 **T2IP<2:0>:** Timer2 Interrupt Priority bits
111 = Interrupt is priority 7 (highest priority interrupt)
•
•
•
001 = Interrupt is priority 1
000 = Interrupt source is disabled

bit 7 **Unimplemented:** Read as ‘0’

bit 6-4 **OC2IP<2:0>:** Output Compare Channel 2 Interrupt Priority bits
111 = Interrupt is priority 7 (highest priority interrupt)
•
•
•
001 = Interrupt is priority 1
000 = Interrupt source is disabled

bit 3-0 **Unimplemented:** Read as ‘0’

© 2006-2014 Microchip Technology Inc.

REGISTER 5-11: IPC2: INTERRUPT PRIORITY CONTROL REGISTER 2

U-0	R/W-1	R/W-0	R/W-0	U-0	R/W-1	R/W-0	R/W-0
—	ADIP<2:0>			—	U1TXIP<2:0>		
bit 15							bit 8

U-0	R/W-1	R/W-0	R/W-0	U-0	R/W-1	R/W-0	R/W-0
—	U1RXIP<2:0>			—	SPI1IP<2:0>		
bit 7							bit 0

Legend:			
R = Readable bit	W = Writable bit	U = Unimplemented bit, read as ‘0’	
-n = Value at POR	‘1’ = Bit is set	‘0’ = Bit is cleared	x = Bit is unknown

bit 15 **Unimplemented:** Read as ‘0’

bit 14-12 **ADIP<2:0>:** ADC Conversion Complete Interrupt Priority bits
111 = Interrupt is priority 7 (highest priority interrupt)
•
•
•
001 = Interrupt is priority 1
000 = Interrupt source is disabled

bit 11 **Unimplemented:** Read as ‘0’

bit 10-8 **U1TXIP<2:0>:** UART1 Transmitter Interrupt Priority bits
111 = Interrupt is priority 7 (highest priority interrupt)
•
•
•
001 = Interrupt is priority 1
000 = Interrupt source is disabled

bit 7 **Unimplemented:** Read as ‘0’

bit 6-4 **U1RXIP<2:0>:** UART1 Receiver Interrupt Priority bits
111 = Interrupt is priority 7 (highest priority interrupt)
•
•
•
001 = Interrupt is priority 1
000 = Interrupt source is disabled

bit 3 **Unimplemented:** Read as ‘0’

bit 2-0 **SPI1IP<2:0>:** SPI1 Event Interrupt Priority bits
111 = Interrupt is priority 7 (highest priority interrupt)
•
•
•
001 = Interrupt is priority 1
000 = Interrupt source is disabled

REGISTER 5-12: IPC3: INTERRUPT PRIORITY CONTROL REGISTER 3

U-0	U-0	U-0	U-0	U-0	R/W-1	R/W-0	R/W-0
—	—	—	—	—	MI2CIP<2:0>		
bit 15							bit 8

U-0	R/W-1	R/W-0	R/W-0	U-0	R/W-1	R/W-0	R/W-0
—	SI2CIP<2:0>			—	NVMIP<2:0>		
bit 7							bit 0

Legend:			
R = Readable bit	W = Writable bit	U = Unimplemented bit, read as ‘0’	
-n = Value at POR	‘1’ = Bit is set	‘0’ = Bit is cleared	x = Bit is unknown

bit 15-11 **Unimplemented:** Read as ‘0’

bit 10-8 **MI2CIP<2:0>:** I^2C Master Events Interrupt Priority bits
111 = Interrupt is priority 7 (highest priority interrupt)
•
•
•
001 = Interrupt is priority 1
000 = Interrupt source is disabled

bit 7 **Unimplemented:** Read as ‘0’

bit 6-4 **SI2CIP<2:0>:** I^2C Slave Events Interrupt Priority bits
111 = Interrupt is priority 7 (highest priority interrupt)
•
•
•
001 = Interrupt is priority 1
000 = Interrupt source is disabled

bit 3 **Unimplemented:** Read as ‘0’

bit 2-0 **NVMIP<2:0>:** Nonvolatile Memory Interrupt Priority bits
111 = Interrupt is priority 7 (highest priority interrupt)
•
•
•
001 = Interrupt is priority 1
000 = Interrupt source is disabled

© 2006-2014 Microchip Technology Inc.

REGISTER 5-13: IPC4: INTERRUPT PRIORITY CONTROL REGISTER 4

U-0	R/W-1	R/W-0	R/W-0	U-0	R/W-1	R/W-0	R/W-0
—	PWM1IP<2:0>			—	PSEMIP<2:0>		
bit 15							bit 8

U-0	R/W-1	R/W-0	R/W-0	U-0	R/W-1	R/W-0	R/W-0
—	INT2IP<2:0>			—	INT1IP<2:0>		
bit 7							bit 0

Legend:			
R = Readable bit	W = Writable bit	U = Unimplemented bit, read as ‘0’	
-n = Value at POR	‘1’ = Bit is set	‘0’ = Bit is cleared	x = Bit is unknown

bit 15 **Unimplemented:** Read as ‘0’

bit 14-12 **PWM1IP<2:0>:** PWM Generator #1 Interrupt Priority bits
111 = Interrupt is priority 7 (highest priority interrupt)
•
•
•
001 = Interrupt is priority 1
000 = Interrupt source is disabled

bit 11 **Unimplemented:** Read as ‘0’

bit 10-8 **PSEMIP<2:0>:** PWM Special Event Match Priority bits
111 = Interrupt is priority 7 (highest priority interrupt)
•
•
•
001 = Interrupt is priority 1
000 = Interrupt source is disabled

bit 7 **Unimplemented:** Read as ‘0’

bit 6-4 **INT2IP<2:0>:** External Interrupt 2 Priority bits
111 = Interrupt is priority 7 (highest priority interrupt)
•
•
•
001 = Interrupt is priority 1
000 = Interrupt source is disabled

bit 3 **Unimplemented:** Read as ‘0’

bit 2-0 **INT1IP<2:0>:** External Interrupt 1 Priority bits
111 = Interrupt is priority 7 (highest priority interrupt)
•
•
•
001 = Interrupt is priority 1
000 = Interrupt source is disabled

REGISTER 5-14: IPC5: INTERRUPT PRIORITY CONTROL REGISTER 5

U-0	U-0	U-0	U-0	U-0	R/W-1	R/W-0	R/W-0
—	—	—	—	—	PWM4IP<2:0>		
bit 15							bit 8

U-0	R/W-1	R/W-0	R/W-0	U-0	R/W-1	R/W-0	R/W-0
—	PWM3IP<2:0>			—	PWM2IP<2:0>		
bit 7							bit 0

Legend:			
R = Readable bit	W = Writable bit	U = Unimplemented bit, read as ‘0’	
-n = Value at POR	‘1’ = Bit is set	‘0’ = Bit is cleared	x = Bit is unknown

bit 15-11 **Unimplemented:** Read as ‘0’

bit 10-8 **PWM4IP<2:0>:** PWM Generator #4 Interrupt Priority bits
111 = Interrupt is priority 7 (highest priority interrupt)
•
•
•
001 = Interrupt is priority 1
000 = Interrupt source is disabled

bit 7 **Unimplemented:** Read as ‘0’

bit 6-4 **PWM3IP<2:0>:** PWM Generator #3 Interrupt Priority bits
111 = Interrupt is priority 7 (highest priority interrupt)
•
•
•
001 = Interrupt is priority 1
000 = Interrupt source is disabled

bit 3 **Unimplemented:** Read as ‘0’

bit 2-0 **PWM2IP<2:0>:** PWM Generator #2 Interrupt Priority bits
111 = Interrupt is priority 7 (highest priority interrupt)
•
•
•
001 = Interrupt is priority 1
000 = Interrupt source is disabled

© 2006-2014 Microchip Technology Inc.

REGISTER 5-15: IPC6: INTERRUPT PRIORITY CONTROL REGISTER 6

U-0	R/W-1	R/W-0	R/W-0	U-0	U-0	U-0	U-0
—	CNIP<2:0>			—	—	—	—
bit 15							bit 8

U-0	U-0	U-0	U-0	U-0	U-0	U-0	U-0
—	—	—	—	—	—	—	—
bit 7							bit 0

Legend:			
R = Readable bit	W = Writable bit	U = Unimplemented bit, read as ‘0’	
-n = Value at POR	‘1’ = Bit is set	‘0’ = Bit is cleared	x = Bit is unknown

bit 15 **Unimplemented:** Read as ‘0’

bit 14-12 **CNIP<2:0>:** Change Notification Interrupt Priority bits

111 = Interrupt is priority 7 (highest priority interrupt)

•

•

•

001 = Interrupt is priority 1

000 = Interrupt source is disabled

bit 11-0 **Unimplemented:** Read as ‘0’

REGISTER 5-16: IPC7: INTERRUPT PRIORITY CONTROL REGISTER 7

U-0	R/W-1	R/W-0	R/W-0	U-0	R/W-1	R/W-0	R/W-0
—	AC3IP<2:0>			—	AC2IP<2:0>		
bit 15							bit 8

U-0	R/W-1	R/W-0	R/W-0	U-0	U-0	U-0	U-0
—	AC1IP<2:0>			—	—	—	—
bit 7							bit 0

Legend:			
R = Readable bit	W = Writable bit	U = Unimplemented bit, read as ‘0’	
-n = Value at POR	‘1’ = Bit is set	‘0’ = Bit is cleared	x = Bit is unknown

bit 15 **Unimplemented:** Read as ‘0’

bit 14-12 **AC3IP<2:0>:** Analog Comparator 3 Interrupt Priority bits
111 = Interrupt is priority 7 (highest priority interrupt)
•
•
•
001 = Interrupt is priority 1
000 = Interrupt source is disabled

bit 11 **Unimplemented:** Read as ‘0’

bit 10-8 **AC2IP<2:0>:** Analog Comparator 2 Interrupt Priority bits
111 = Interrupt is priority 7 (highest priority interrupt)
•
•
•
001 = Interrupt is priority 1
000 = Interrupt source is disabled

bit 7 **Unimplemented:** Read as ‘0’

bit 6-4 **AC1IP<2:0>:** Analog Comparator 1 Interrupt Priority bits
111 = Interrupt is priority 7 (highest priority interrupt)
•
•
•
001 = Interrupt is priority 1
000 = Interrupt source is disabled

bit 3-0 **Unimplemented:** Read as ‘0’

© 2006-2014 Microchip Technology Inc.

REGISTER 5-17: IPC8: INTERRUPT PRIORITY CONTROL REGISTER 8

U-0	U-0	U-0	U-0	U-0	U-0	U-0	U-0
—	—	—	—	—	—	—	—
bit 15							bit 8

U-0	U-0	U-0	U-0	U-0	R/W-1	R/W-0	R/W-0
—	—	—	—	—	AC4IP<2:0>		
bit 7							bit 0

Legend:			
R = Readable bit	W = Writable bit	U = Unimplemented bit, read as ‘0’	
-n = Value at POR	‘1’ = Bit is set	‘0’ = Bit is cleared	x = Bit is unknown

bit 15-3 **Unimplemented:** Read as ‘0’

bit 2-0 **AC4IP<2:0>:** Analog Comparator 4 Interrupt Priority bits

111 = Interrupt is priority 7 (highest priority interrupt)

•

•

•

001 = Interrupt is priority 1

000 = Interrupt source is disabled

REGISTER 5-18: IPC9: INTERRUPT PRIORITY CONTROL REGISTER 9

U-0	R/W-1	R/W-0	R/W-0	U-0	R/W-1	R/W-0	R/W-0
—	ADCP2IP<2:0>			—	ADCP1IP<2:0>		
bit 15							bit 8

U-0	R/W-1	R/W-0	R/W-0	U-0	U-0	U-0	U-0
—	ADCP0IP<2:0>			—	—	—	—
bit 7							bit 0

Legend:			
R = Readable bit	W = Writable bit	U = Unimplemented bit, read as ‘0’	
-n = Value at POR	‘1’ = Bit is set	‘0’ = Bit is cleared	x = Bit is unknown

bit 15 **Unimplemented:** Read as ‘0’

bit 14-12 **ADCP2IP<2:0>:** ADC Pair 2 Conversion Done Interrupt Priority bits
111 = Interrupt is priority 7 (highest priority interrupt)
•
•
•
001 = Interrupt is priority 1
000 = Interrupt source is disabled

bit 11 **Unimplemented:** Read as ‘0’

bit 10-8 **ADCP1IP<2:0>:** ADC Pair 1 Conversion Done Interrupt Priority bits
111 = Interrupt is priority 7 (highest priority interrupt)
•
•
•
001 = Interrupt is priority 1
000 = Interrupt source is disabled

bit 7 **Unimplemented:** Read as ‘0’

bit 6-4 **ADCP0IP<2:0>:** ADC Pair 0 Conversion Done Interrupt Priority bits
111 = Interrupt is priority 7 (highest priority interrupt)
•
•
•
001 = Interrupt is priority 1
000 = Interrupt source is disabled

bit 3-0 **Unimplemented:** Read as ‘0’

© 2006-2014 Microchip Technology Inc.

REGISTER 5-19: IPC10: INTERRUPT PRIORITY CONTROL REGISTER 10

U-0	U-0	U-0	U-0	U-0	R/W-1	R/W-0	R/W-0
—	—	—	—	—	ADCP5IP<2:0>		
bit 15							bit 8

U-0	R/W-1	R/W-0	R/W-0	U-0	R/W-1	R/W-0	R/W-0
—	ADCP4IP<2:0>			—	ADCP3IP<2:0>		
bit 7							bit 0

Legend:			
R = Readable bit	W = Writable bit	U = Unimplemented bit, read as ‘0’	
-n = Value at POR	‘1’ = Bit is set	‘0’ = Bit is cleared	x = Bit is unknown

bit 15-11 **Unimplemented:** Read as ‘0’

bit 10 - 8 **ADCP5IP<2:0>:** ADC Pair 5 Conversion Done Interrupt Priority bits
111 = Interrupt is priority 7 (highest priority interrupt)
•
•
•
001 = Interrupt is priority 1
000 = Interrupt source is disabled

bit 7 **Unimplemented:** Read as ‘0’

bit 6-4 **ADCP4IP<2:0>:** ADC Pair 4 Conversion Done Interrupt Priority bits
111 = Interrupt is priority 7 (highest priority interrupt)
•
•
•
001 = Interrupt is priority 1
000 = Interrupt source is disabled

bit 3 **Unimplemented:** Read as ‘0’

bit 2-0 **ADCP3IP<2:0>:** ADC Pair 3 Conversion Done Interrupt Priority bits
111 = Interrupt is priority 7 (highest priority interrupt)
•
•
•
001 = Interrupt is priority 1
000 = Interrupt source is disabled

REGISTER 5-20: INTTREG: INTERRUPT CONTROL AND STATUS REGISTER

U-0	U-0	U-0	U-0	R-0	R-0	R-0	R-0
—	—	—	—	ILR<3:0>			
bit 15							bit 8

U-0	R-0	R-0	R-0	R-0	R-0	R-0	R-0
—	VECNUM<6:0>						
bit 7							bit 0

Legend:			
R = Readable bit	W = Writable bit	U = Unimplemented bit, read as ‘0’	
-n = Value at POR	‘1’ = Bit is set	‘0’ = Bit is cleared	x = Bit is unknown

bit 15-12 **Unimplemented:** Read as ‘0’

bit 11-8 **ILR:** New CPU Interrupt Priority Level bits
1111 = CPU Interrupt Priority Level is 15
•
•
•
0001 = CPU Interrupt Priority Level is 1
0000 = CPU Interrupt Priority Level is 0

bit 7 **Unimplemented:** Read as ‘0’

bit 6-0 **VECNUM:** Vector Number of Pending Interrupt bits
0111111 = Interrupt Vector pending is number 135
•
•
•
0000001 = Interrupt Vector pending is number 9
0000000 = Interrupt Vector pending is number 8

© 2006-2014 Microchip Technology Inc.

TABLE 5-2: INTERRUPT CONTROLLER REGISTER MAP

SFR Name	ADR	Bit 15	Bit 14	Bit 13	Bit 12	Bit 11	Bit 10	Bit 9	Bit 8	Bit 7	Bit 6	Bit 5	Bit 4	Bit 3	Bit 2	Bit 1	Bit 0	Reset State
INTCON1	0080	NSTDIS	OVAERR	OVBERR	COVAERR	COVBERR	OVATE	OVBTE	COVTE	SFTACERR	DIV0ERR	—	MATHERR	ADDRERR	STKERR	OSCFAIL	—	0000 0000 0000 0000
INTCON2	0082	ALTIVT	DISI	—	—	—	—	—	—	—	—	—	—	—	INT2EP	INT1EP	INT0EP	0000 0000 0000 0000
IFS0	0084	—	MI2CIF	SI2CIF	NVMIF	ADIF	U1TXIF	U1RXIF	SPI1IF	T3IF	T2IF	OC2IF	—	T1IF	OC1IF	IC1IF	INT0IF	0000 0000 0000 0000
IFS1	0086	AC3IF	AC2IF	AC1IF	—	CNIF	—	—	—	—	PWM4IF	PWM3IF	PWM2IF	PWM1IF	PSEMIF	INT2IF	INT1IF	0000 0000 0000 0000
IFS2	0088	—	—	—	—	—	ADCP5IF	ADCP4IF	ADCP3IF	ADCP2IF	ADCP1IF	ADCP0IF	—	—	—	—	AC4IF	0000 0000 0000 0000
IEC0	0094	—	MI2CIE	SI2CIE	NVMIE	ADIE	U1TXIE	U1RXIE	SPI1IE	T3IE	T2IE	OC2IE	—	T1IE	OC1IE	IC1IE	INT0IE	0000 0000 0000 0000
IEC1	0096	AC3IE	AC2IE	AC1IE	—	CNIE	—	—	—	—	PWM4IE	PWM3IE	PWM2IE	PWM1IE	PSEMIE	INT2IE	INT1IE	0000 0000 0000 0000
IEC2	0098	—	—	—	—	—	ADCP5IE	ADCP4IE	ADCP3IE	ADCP2IE	ADCP1IE	ADCP0IE	—	—	—	—	AC4IE	0000 0000 0000 0000
IPC0	00A4	—	T1IP<2:0>			—	OC1IP<2:0>			—	IC1IP<2:0>			—	INT0IP<2:0>			0100 0100 0100 0100
IPC1	00A6	—	T31P<2:0>			—	T2IP<2:0>			—	OC2IP<2:0>			—	—	—	—	0100 0100 0100 0000
IPC2	00A8	—	ADIP<2:0>			—	U1TXIP<2:0>			—	U1RXIP<2:0>			—	SPI1IP<2:0>			0100 0100 0100 0100
IPC3	00AA	—	—	—	—	—	MI2CIP<2:0>			—	SI2CIP<2:0>			—	NVMIP<2:0>			0000 0100 0100 0100
IPC4	00AC	—	PWM1IP<2:0>			—	PSEMIP<2:0>			—	INT2IP<2:0>			—	INT1IP<2:0>			0100 0100 0100 0100
IPC5	00AE	—	—	—	—	—	PWM4IP<2:0>			—	PWM3IP<2:0>			—	PWM2IP<2:0>			0000 0100 0100 0100
IPC6	00B0	—	CNIP<2:0>			—	—	—	—	—	—	—	—	—	—	—	—	0100 0000 0000 0000
IPC7	00B2	—	AC3IP<2:0>			—	AC2IP<2:0>			—	AC1IP<2:0>			—	—	—	—	0100 0100 0100 0000
IPC8	00B4	—	—	—	—	—	—	—	—	—	—	—	—	—	AC4IP<2:0>			0000 0000 0000 0100
IPC9	00B6	—	ADCP2IP<2:0>			—	ADCP1IP<2:0>			—	ADCP0IP<2:0>			—	—	—	—	0100 0100 0100 0000
IPC10	00B8	—	—	—	—	—	ADCP5IP<2:0>			—	ADCP4IP<2:0>			—	ADCP3IP<2:0>			0000 0100 0100 0100
INTTREG	00E0	—	—	—	—	ILR<3:0>				—	VECNUM<6:0>							0000 0000 0000 0000

Note: Refer to the "*dsPIC30F/33F Family Reference Manual*" (DS70157) for descriptions of register bit fields.

© 2006-2014 Microchip Technology Inc.

NOTES:

© 2006-2014 Microchip Technology Inc.

6.0 I/O PORTS

Note: This data sheet summarizes features of this group of dsPIC30F devices and is not intended to be a complete reference source. For more information on the CPU, peripherals, register descriptions and general device functionality, refer to the "*dsPIC30F Family Reference Manual*" (DS70046).

All of the device pins (except VDD, VSS, $\overline{\text{MCLR}}$ and OSC1/CLKI) are shared between the peripherals and the parallel I/O ports.

All I/O input ports feature Schmitt Trigger inputs for improved noise immunity.

6.1 Parallel I/O (PIO) Ports

When a peripheral is enabled and the peripheral is actively driving an associated pin, the use of the pin as a general purpose output pin is disabled. The I/O pin may be read, but the output driver for the parallel port bit will be disabled. If a peripheral is enabled, but the peripheral is not actively driving a pin, that pin may be driven by a port.

All port pins have three registers directly associated with the operation of the port pin. The data direction register (TRISx) determines whether the pin is an input or an output. If the data direction bit is a '1', then the pin is an input. All port pins are defined as inputs after a Reset. Reads from the latch (LATx), read the latch. Writes to the latch, write the latch (LATx). Reads from the port (PORTx), read the port pins, and writes to the port pins, write the latch (LATx).

Any bit and its associated data and control registers that are not valid for a particular device will be disabled. That means the corresponding LATx and TRISx registers and the port pin will read as zeros.

When a pin is shared with another peripheral or function that is defined as an input only, it is nevertheless regarded as a dedicated port because there is no other competing source of outputs.

A Parallel I/O (PIO) port that shares a pin with a peripheral is, in general, subservient to the peripheral. The peripheral's output buffer data and control signals are provided to a pair of multiplexers. The multiplexers select whether the peripheral or the associated port has ownership of the output data and control signals of the I/O pad cell. Figure 6-1 shows how ports are shared with other peripherals, and the associated I/O cell (pad) to which they are connected. Table 6-1 and Table 6-2 show the register formats for the shared ports, PORTA through PORTF, for the dsPIC30F1010/2020 and PORTA through PORTG for the dsPIC30F2023 device, respectively.

FIGURE 6-1: BLOCK DIAGRAM OF A SHARED PORT STRUCTURE

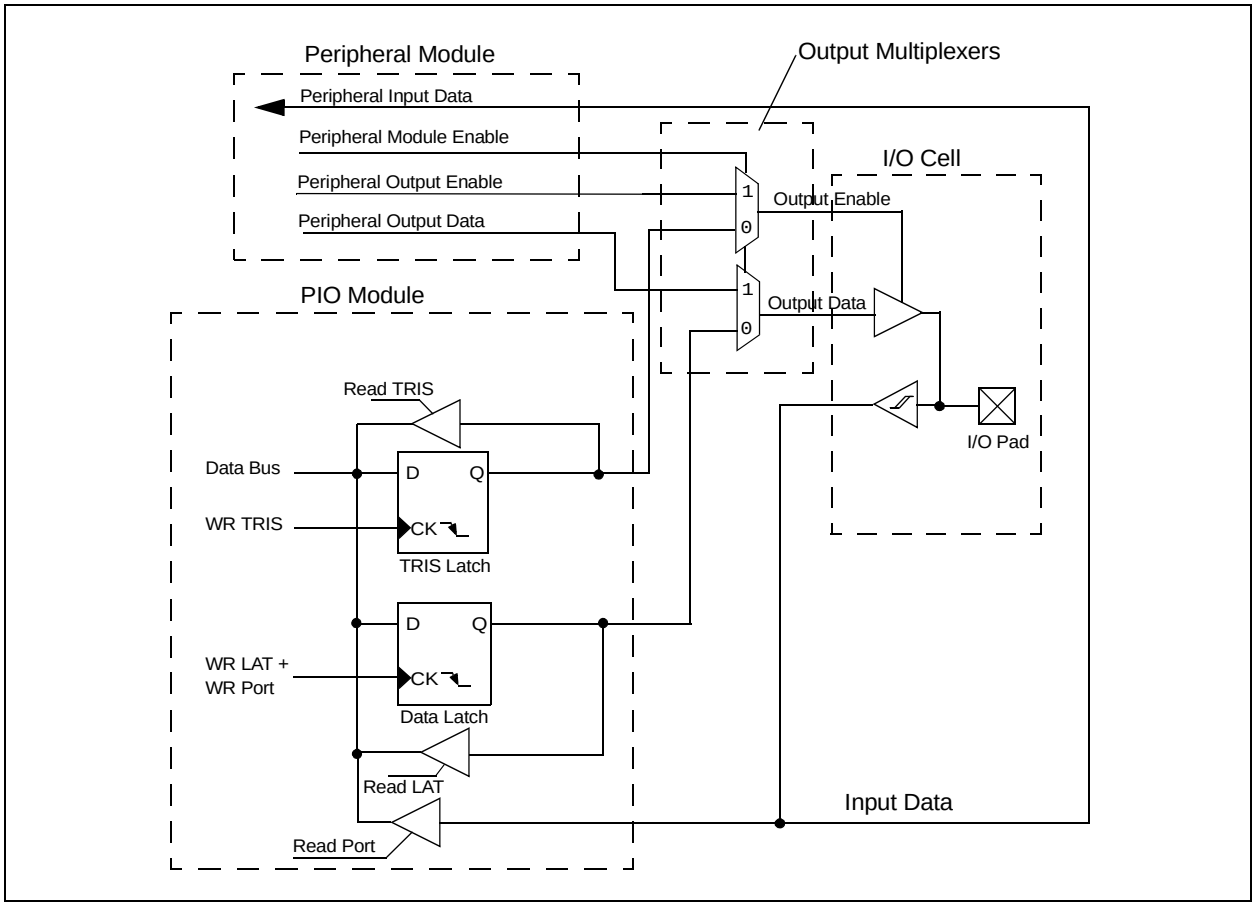

6.2 Configuring Analog Port Pins

The use of the ADPCFG and TRIS registers control the operation of the A/D port pins. The port pins that are desired as analog inputs must have their corresponding TRIS bit set (input). If the TRIS bit is cleared (output), the digital output level (V_{OH} or V_{OL}) will be converted.

When reading the PORT register, all pins configured as analog input channel will read as cleared (a low level).

Pins configured as digital inputs will not convert an analog input. Analog levels on any pin that is defined as a digital input (including the ANx pins), may cause the input buffer to consume current that exceeds the device specifications.

6.2.1 I/O PORT WRITE/READ TIMING

One instruction cycle is required between a port direction change or port write operation and a read operation of the same port. Typically this instruction would be a NOP.

EXAMPLE 6-1: PORT WRITE/READ EXAMPLE

```
MOV 0xFF00, W0; Configure PORTB<15:8>
      ; as inputs
MOV W0, TRISBB; and PORTB<7:0> as outputs
NOP   ; Delay 1 cycle
BTSS PORTB, #13; Next Instruction
```

6.3 Input Change Notification

The input change notification function of the I/O ports allows the dsPIC30F1010/202X devices to generate interrupt requests to the processor in response to a change-of-state on selected input pins. This feature is capable of detecting input change-of-states even in Sleep mode, when the clocks are disabled. There are 8 external signals (CN0 through CN7) that can be selected (enabled) for generating an interrupt request on a change-of-state.

There are two control registers associated with the CN module. The CNEN1 register contain the CN interrupt enable (CNxIE) control bits for each of the CN input pins. Setting any of these bits enables a CN interrupt for the corresponding pins.

Each CN pin also has a weak pull-up connected to it. The pull-ups act as a current source that is connected to the pin and eliminate the need for external resistors when push button or keypad devices are connected. The pull-ups are enabled separately using the CNPU1 register, which contain the weak pull-up enable (CNxPUE) bits for each of the CN pins. Setting any of the control bits enables the weak pull-ups for the corresponding pins.

Note: Pull-ups on change notification pins should always be disabled whenever the port pin is configured as a digital output.

© 2006-2014 Microchip Technology Inc.

TABLE 6-1: dsPIC30F1010/2020 PORT REGISTER MAP

SFR Name	Addr.	Bit 15	Bit 14	Bit 13	Bit 12	Bit 11	Bit 10	Bit 9	Bit 8	Bit 7	Bit 6	Bit 5	Bit 4	Bit 3	Bit 2	Bit 1	Bit 0	Reset State
TRISA	02C0	—	—	—	—	—	—	TRISA9	—	—	—	—	—	—	—	—	—	0000 0010 0000 0000
PORTA	02C2	—	—	—	—	—	—	RA9	—	—	—	—	—	—	—	—	—	0000 0000 0000 0000
LATA	02C4	—	—	—	—	—	—	LAT9	—	—	—	—	—	—	—	—	—	0000 0000 0000 0000
TRISB	02C6	—	—	—	—	—	—	—	—	TRISB7	TRISB6	TRISB5	TRISB4	TRISB3	TRISB2	TRISB1	TRISB0	0000 0000 0011 1111
PORTB	02C8	—	—	—	—	—	—	—	—	RB7	RB6	RB5	RB4	RB3	RB2	RB1	RB0	0000 0000 0000 0000
LATB	02CA	—	—	—	—	—	—	—	—	LATB7	LATB6	LATB5	LATB4	LATB3	LATB2	LATB1	LATB0	0000 0000 0000 0000
TRISD	02D2	—	—	—	—	—	—	—	—	—	—	—	—	—	—	—	TRISD0	0000 0000 0000 0001
PORTD	02D4	—	—	—	—	—	—	—	—	—	—	—	—	—	—	—	RD0	0000 0000 0000 0000
LATD	02D6	—	—	—	—	—	—	—	—	—	—	—	—	—	—	—	LATD0	0000 0000 0000 0000
TRISE	02D8	—	—	—	—	—	—	—	—	TRSE7	TRSE6	TRISE5	TRISE4	TRISE3	TRISE2	TRISE1	TRISE0	0000 0000 1111 1111
PORTE	02DA	—	—	—	—	—	—	—	—	RE7	RE6	RE5	RE4	RE3	RE2	RE1	RE0	0000 0000 0000 0000
LATE	02DC	—	—	—	—	—	—	—	—	LATE7	LATE6	LATE5	LATE4	LATE3	LATE2	LATE1	LATE0	0000 0000 0000 0000
TRISF	02DE	—	—	—	—	—	—	—	TRISF8	TRISF7	TRISF6	—	—	—	—	—	—	0000 0001 1100 0000
PORTF	02E0	—	—	—	—	—	—	—	RF8	RF7	RF6	—	—	—	—	—	—	0000 0000 0000 0000
LATF	02E2	—	—	—	—	—	—	—	LATF8	LATF7	LATF6	—	—	—	—	—	—	0000 0000 0000 0000

Note: Refer to the "*dsPIC30F Family Reference Manual*" (DS70046) for descriptions of register bit fields.

© 2006-2014 Microchip Technology Inc.

TABLE 6-2: dsPIC30F2023 PORT REGISTER MAP

SFR Name	Addr.	Bit 15	Bit 14	Bit 13	Bit 12	Bit 11	Bit 10	Bit 9	Bit 8	Bit 7	Bit 6	Bit 5	Bit 4	Bit 3	Bit 2	Bit 1	Bit 0	Reset State
TRISA	02C0	—	—	—	—	TRISA11	TRISA10	TRIS9	TRISA8	—	—	—	—	—	—	—	—	0000 1111 0000 0000
PORTA	02C2	—	—	—	—	RA11	RA10	RA9	RA8	—	—	—	—	—	—	—	—	0000 0000 0000 0000
LATA	02C4	—	—	—	—	LATA11	LATA10	LATA9	LATA8	—	—	—	—	—	—	—	—	0000 0000 0000 0000
TRISB	02C6	—	—	—	—	TRISB11	TRISB10	TRISB9	TRISB8	TRISB7	TRIS6	TRISB5	TRISB4	TRISB3	TRISB2	TRISB1	TRISB0	0000 1111 1111 1111
PORTB	02C8	—	—	—	—	RB11	RB10	RB9	RB8	RB7	RB6	RB5	RB4	RB3	RB2	RB1	RB0	0000 0000 0000 0000
LATB	02CA	—	—	—	—	LATB11	LATB10	LATB9	LATB8	LATB7	LATB6	LATB5	LATB4	LATB3	LATB2	LATB1	LATB0	0000 0000 0000 0000
TRISD	02D2	—	—	—	—	—	—	—	—	—	—	—	—	—	—	TRISD1	TRISD0	0000 0000 0000 0011
PORTD	02D4	—	—	—	—	—	—	—	—	—	—	—	—	—	—	RD1	RD0	0000 0000 0000 0000
LATD	02D6	—	—	—	—	—	—	—	—	—	—	—	—	—	—	LATD1	LATD0	0000 0000 0000 0000
TRISE	02D8	—	—	—	—	—	—	—	—	TRSE7	TRSE6	TRISE5	TRISE4	TRISE3	TRISE2	TRISE1	TRISE0	0000 0000 1111 1111
PORTE	02DA	—	—	—	—	—	—	—	—	RE7	RE6	RE5	RE4	RE3	RE2	RE1	RE0	0000 0000 0000 0000
LATE	02DC	—	—	—	—	—	—	—	—	LATE7	LATE6	LATE5	LATE4	LATE3	LATE2	LATE1	LATE0	0000 0000 0000 0000
TRISF	02DE	TRISF15	TRISF14	—	—	—	—	—	TRISF8	TRISF7	TRISF6	—	—	TRISF3	TRISF2	—	—	1100 0001 1100 1100
PORTF	02E0	RF15	RF14	—	—	—	—	—	RF8	RF7	RF6	—	—	RF3	RF2	—	—	0000 0000 0000 0000
LATF	02E2	LATF15	LATF14	—	—	—	—	—	LATF8	LATF7	LATF6	—	—	LATF3	LATF2	—	—	0000 0000 0000 0000
TRISG	02E4	—	—	—	—	—	—	—	—	—	—	—	—	TRISG3	TRISG2	—	—	0000 0000 0000 1100
PORTG	02E6	—	—	—	—	—	—	—	—	—	—	—	—	RG3	RG2	—	—	0000 0000 0000 0000
LATG	02E8	—	—	—	—	—	—	—	—	—	—	—	—	LATG3	LATG2	—	—	0000 0000 0000 0000

Note: Refer to the "*dsPIC30F Family Reference Manual*" (DS70046) for descriptions of register bit fields.

TABLE 6-3: dsPIC30F1010/202X INPUT CHANGE NOTIFICATION REGISTER MAP

SFR Name	Addr.	Bit 15	Bit 14	Bit 13	Bit 12	Bit 11	Bit 10	Bit 9	Bit 8	Bit 7	Bit 6	Bit 5	Bit 4	Bit 3	Bit 2	Bit 1	Bit 0	Reset State
CNEN1	0060	—	—	—	—	—	—	—	—	CN7IE	CN6IE	CN5IE	CN4IE	CN3IE	CN2IE	CN1IE	CN0IE	0000 0000 0000 0000
CNPU1	0064	—	—	—	—	—	—	—	—	CN7PUE	CN6PUE	CN5PUE	CN4PUE	CN3PUE	CN2PUE	CN1PUE	CN0PUE	0000 0000 0000 0000

Note: Refer to the "*dsPIC30F Family Reference Manual*" (DS70046) for descriptions of register bit fields.

© 2006-2014 Microchip Technology Inc.

7.0 FLASH PROGRAM MEMORY

Note: This data sheet summarizes features of this group of dsPIC30F devices and is not intended to be a complete reference source. For more information on the CPU, peripherals, register descriptions and general device functionality, refer to the "*dsPIC30F Family Reference Manual*" (DS70046). For more information on the device instruction set and programming, refer to the "*dsPIC30F/33F Programmer's Reference Manual*" (DS70157).

The dsPIC30F family of devices contains internal program Flash memory for executing user code. There are two methods by which the user can program this memory:

1. In-Circuit Serial Programming™ (ICSP™) programming capability
2. Run-Time Self-Programming (RTSP)

7.1 In-Circuit Serial Programming (ICSP)

dsPIC30F devices can be serially programmed while in the end application circuit. This is simply done with two lines for Programming Clock and Programming Data (which are named PGC and PGD respectively), and three other lines for Power (V_{DD}), Ground (V_{SS}) and Master Clear ($\overline{MCLR}$). This allows customers to manufacture boards with unprogrammed devices, and then program the microcontroller just before shipping the product. This also allows the most recent firmware or a custom firmware to be programmed.

7.2 Run-Time Self-Programming (RTSP)

RTSP is accomplished using `TBLRD` (table read) and `TBLWT` (table write) instructions.

With RTSP, the user may erase program memory 32 instructions (96 bytes) at a time and can write program memory data 32 instructions (96 bytes) at a time.

7.3 Table Instruction Operation Summary

The `TBLRDL` and the `TBLWTL` instructions are used to read or write to bits <15:0> of program memory. `TBLRDL` and `TBLWTL` can access program memory in Word or Byte mode.

The `TBLRDH` and `TBLWTH` instructions are used to read or write to bits <23:16> of program memory. `TBLRDH` and `TBLWTH` can access program memory in Word or Byte mode.

A 24-bit program memory address is formed using bits <7:0> of the TBLPAG register and the Effective Address (EA) from a W register specified in the table instruction, as shown in Figure 7-1.

FIGURE 7-1: ADDRESSING FOR TABLE AND NVM REGISTERS

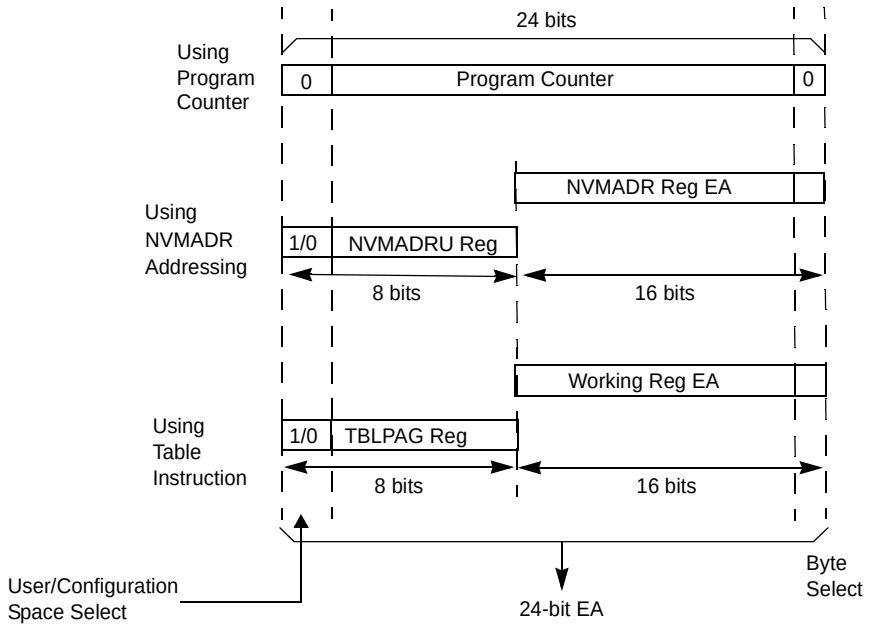

7.4 RTSP Operation

The dsPIC30F Flash program memory is organized into rows and panels. Each row consists of 32 instructions, or 96 bytes. Each panel consists of 128 rows, or 4K x 24 instructions. RTSP allows the user to erase one row (32 instructions) at a time and to program 32 instructions at one time. RTSP may be used to program multiple program memory panels, but the table pointer must be changed at each panel boundary.

Each panel of program memory contains write latches that hold 32 instructions of programming data. Prior to the actual programming operation, the write data must be loaded into the panel write latches. The data to be programmed into the panel is loaded in sequential order into the write latches; instruction '0', instruction '1', etc. The instruction words loaded must always be from a group of 32 boundary.

The basic sequence for RTSP programming is to set up a table pointer, then do a series of `TBLWT` instructions to load the write latches. Programming is performed by setting the special bits in the NVMCON register. 32 `TBLWTL` and four `TBLWTH` instructions are required to load the 32 instructions. If multiple panel programming is required, the table pointer needs to be changed and the next set of multiple write latches written.

All of the table write operations are single-word writes (2 instruction cycles), because only the table latches are written. A programming cycle is required for programming each row.

The Flash Program Memory is readable, writable and erasable during normal operation over the entire VDD range.

7.5 Control Registers

The four SFRs used to read and write the program Flash memory are:

- NVMCON
- NVMADR
- NVMADRU
- NVMKEY

7.5.1 NVMCON REGISTER

The NVMCON register controls which blocks are to be erased, which memory type is to be programmed and the start of the programming cycle.

7.5.2 NVMADR REGISTER

The NVMADR register is used to hold the lower two bytes of the effective address. The NVMADR register captures the EA<15:0> of the last table instruction that has been executed and selects the row to write.

7.5.3 NVMADRU REGISTER

The NVMADRU register is used to hold the upper byte of the effective address. The NVMADRU register captures the EA<23:16> of the last table instruction that has been executed.

7.5.4 NVMKEY REGISTER

NVMKEY is a write-only register that is used for write protection. To start a programming or an erase sequence, the user must consecutively write 0x55 and 0xAA to the NVMKEY register. Refer to **Section 7.6 "Programming Operations"** for further details.

Note:	The user can also directly write to the NVMADR and NVMADRU registers to specify a program memory address for erasing or programming.

© 2006-2014 Microchip Technology Inc.

7.6 Programming Operations

A complete programming sequence is necessary for programming or erasing the internal Flash in RTSP mode. A programming operation is nominally 2 msec in duration and the processor stalls (waits) until the operation is finished. Setting the WR bit (NVMCON<15>) starts the operation, and the WR bit is automatically cleared when the operation is finished.

7.6.1 PROGRAMMING ALGORITHM FOR PROGRAM FLASH

The user can erase and program one row of program Flash memory at a time. The general process is:

1. Read one row of program Flash (32 instruction words) and store into data RAM as a data “image”.
2. Update the data image with the desired new data.
3. Erase program Flash row.
   a) Setup NVMCON register for multi-word, program Flash, erase and set WREN bit.
   b) Write address of row to be erased into NVMADRU/NVMDR.
   c) Write ‘55’ to NVMKEY.
   d) Write ‘AA’ to NVMKEY.
   e) Set the WR bit. This will begin erase cycle.
   f) CPU will stall for the duration of the erase cycle.
   g) The WR bit is cleared when erase cycle ends.
4. Write 32 instruction words of data from data RAM “image” into the program Flash write latches.
5. Program 32 instruction words into program Flash.
   a) Setup NVMCON register for multi-word, program Flash, program and set WREN bit.
   b) Write ‘55’ to NVMKEY.
   c) Write ‘AA’ to NVMKEY.
   d) Set the WR bit. This will begin program cycle.
   e) CPU will stall for duration of the program cycle.
   f) The WR bit is cleared by the hardware when program cycle ends.
6. Repeat steps 1 through 5 as needed to program desired amount of program Flash memory.

7.6.2 ERASING A ROW OF PROGRAM MEMORY

Example 7-1 shows a code sequence that can be used to erase a row (32 instructions) of program memory.

EXAMPLE 7-1: ERASING A ROW OF PROGRAM MEMORY

```
; Setup NVMCON for erase operation, multi word write
; program memory selected, and writes enabled
        MOV     #0x4041,W0                      ;
        MOV     W0,NVMCON                       ; Init NVMCON SFR
; Init pointer to row to be ERASED
        MOV     #tblpage(PROG_ADDR),W0          ;
        MOV     W0,NVMADRU                      ; Initialize PM Page Boundary SFR
        MOV     #tbloffset(PROG_ADDR),W0        ; Initialize in-page EA<15:0> pointer
        MOV     W0, NVMADR                      ; Initialize NVMADR SFR
        DISI    #5                              ; Block all interrupts with priority <7
                                                ; for next 5 instructions
        MOV     #0x55,W0
        MOV     W0,NVMKEY                       ; Write the 0x55 key
        MOV     #0xAA,W1                        ;
        MOV     W1,NVMKEY                       ; Write the 0xAA key
        BSET    NVMCON,#WR                      ; Start the erase sequence
        NOP                                     ; Insert two NOPs after the erase
        NOP                                     ; command is asserted
```

7.6.3 LOADING WRITE LATCHES

Example 7-2 shows a sequence of instructions that can be used to load the 96 bytes of write latches. 32 TBLWTL and 32 TBLWTH instructions are needed to load the write latches selected by the table pointer.

EXAMPLE 7-2: LOADING WRITE LATCHES

```
; Set up a pointer to the first program memory location to be written
; program memory selected, and writes enabled
        MOV     #0x0000,W0                      ;
        MOV     W0,TBLPAG                       ; Initialize PM Page Boundary SFR
        MOV     #0x6000,W0                      ; An example program memory address
; Perform the TBLWT instructions to write the latches
; 0th_program_word
        MOV     #LOW_WORD_0,W2                  ;
        MOV     #HIGH_BYTE_0,W3                 ;
        TBLWTL  W2,[W0]                         ; Write PM low word into program latch
        TBLWTH  W3,[W0++]                       ; Write PM high byte into program latch
; 1st_program_word
        MOV     #LOW_WORD_1,W2                  ;
        MOV     #HIGH_BYTE_1,W3                 ;
        TBLWTL  W2,[W0]                         ; Write PM low word into program latch
        TBLWTH  W3,[W0++]                       ; Write PM high byte into program latch
;  2nd_program_word
        MOV     #LOW_WORD_2,W2                  ;
        MOV     #HIGH_BYTE_2,W3                 ;
        TBLWTL  W2, [W0]                        ; Write PM low word into program latch
        TBLWTH  W3, [W0++]                      ; Write PM high byte into program latch
        •
        •
        •
; 31st_program_word
        MOV     #LOW_WORD_31,W2                 ;
        MOV     #HIGH_BYTE_31,W3                ;
        TBLWTL  W2, [W0]                        ; Write PM low word into program latch
        TBLWTH  W3, [W0++]                      ; Write PM high byte into program latch
```

Note: In Example 7-2, the contents of the upper byte of W3 have no effect.

7.6.4 INITIATING THE PROGRAMMING SEQUENCE

For protection, the write initiate sequence for NVMKEY must be used to allow any erase or program operation to proceed. After the programming command has been executed, the user must wait for the programming time until programming is complete. The two instructions following the start of the programming sequence should be NOPs.

EXAMPLE 7-3: INITIATING A PROGRAMMING SEQUENCE

```
        DISI    #5                      ; Block all interrupts with priority <7
                                        ; for next 5 instructions
        MOV     #0x55,W0
        MOV     W0,NVMKEY               ; Write the 0x55 key
        MOV     #0xAA,W1                ;
        MOV     W1,NVMKEY               ; Write the 0xAA key
        BSET    NVMCON,#WR              ; Start the erase sequence
        NOP                             ; Insert two NOPs after the erase
        NOP                             ; command is asserted
```


© 2006-2014 Microchip Technology Inc.

TABLE 7-1: NVM REGISTER MAP

File Name	Addr.	Bit 15	Bit 14	Bit 13	Bit 12	Bit 11	Bit 10	Bit 9	Bit 8	Bit 7	Bit 6	Bit 5	Bit 4	Bit 3	Bit 2	Bit 1	Bit 0	All RESETS
NVMCON	0760	WR	WREN	WRERR	—	—	—	—	TWRI	—	PROGOP<6:0>							0000 0000 0000 0000
NVMADR	0762	NVMADR<15:0>																uuuu uuuu uuuu uuuu
NVMADRU	0764	—	—	—	—	—	—	—	—	NVMADR<23:16>								0000 0000 uuuu uuuu
NVMKEY	0766	—	—	—	—	—	—	—	—	KEY<7:0>								0000 0000 0000 0000

Legend: u = uninitialized bit

Note: Refer to the "*dsPIC30F Family Reference Manual*" (DS70046) for descriptions of register bit fields.

© 2006-2014 Microchip Technology Inc.

NOTES:

© 2006-2014 Microchip Technology Inc.

8.0 TIMER1 MODULE

Note: This data sheet summarizes features of this group of dsPIC30F devices and is not intended to be a complete reference source. For more information on the CPU, peripherals, register descriptions and general device functionality, refer to the "*dsPIC30F Family Reference Manual*" (DS70046).

This section describes the 16-bit General Purpose Timer1 module and associated operational modes. Figure 8-1 depicts the simplified block diagram of the 16-bit Timer1 Module.

Note: Timer1 is a 'Type A' timer. Please refer to the specifications for a Type A timer in **Section 21.0 "Electrical Characteristics"** of this document.

The following sections provide a detailed description of the operational modes of the timers, including setup and control registers along with associated block diagrams.

The Timer1 module is a 16-bit timer which can serve as the time counter for the real-time clock, or operate as a free running interval timer/counter. The 16-bit timer has the following modes:

- 16-bit Timer
- 16-bit Synchronous Counter
- 16-bit Asynchronous Counter

Further, the following operational characteristics are supported:

- Timer gate operation
- Selectable prescaler settings
- Timer operation during CPU Idle and Sleep modes
- Interrupt on 16-bit period register match or falling edge of external gate signal

These operating modes are determined by setting the appropriate bit(s) in the 16-bit SFR, T1CON. Figure 8-1 presents a block diagram of the 16-bit timer module.

16-bit Timer Mode: In the 16-bit Timer mode, the timer increments on every instruction cycle up to a match value, preloaded into the period register PR1, then resets to 0 and continues to count.

When the CPU goes into the Idle mode, the timer will stop incrementing, unless the TSIDL (T1CON<13>) bit = 0. If TSIDL = 1, the timer module logic will resume the incrementing sequence upon termination of the CPU Idle mode.

16-bit Synchronous Counter Mode: In the 16-bit Synchronous Counter mode, the timer increments on the rising edge of the applied external clock signal, which is synchronized with the internal phase clocks. The timer counts up to a match value preloaded in PR1, then resets to 0 and continues.

When the CPU goes into the Idle mode, the timer will stop incrementing, unless the respective TSIDL bit = 0. If TSIDL = 1, the timer module logic will resume the incrementing sequence upon termination of the CPU Idle mode.

16-bit Asynchronous Counter Mode: In the 16-bit Asynchronous Counter mode, the timer increments on every rising edge of the applied external clock signal. The timer counts up to a match value preloaded in PR1, then resets to '0' and continues.

When the timer is configured for the Asynchronous mode of operation and the CPU goes into the Idle mode, the timer will stop incrementing if TSIDL = 1.

FIGURE 8-1: 16-BIT TIMER1 MODULE BLOCK DIAGRAM (TYPE A TIMER)

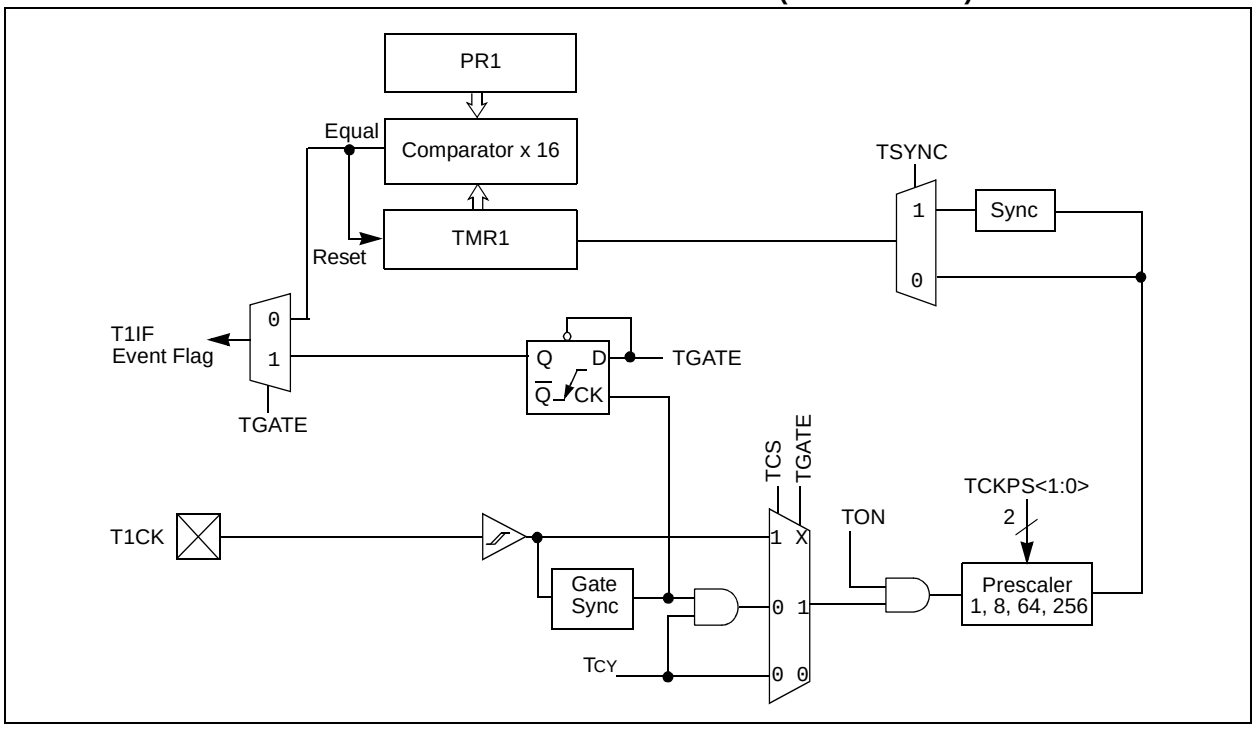

8.1 Timer Gate Operation

The 16-bit timer can be placed in the Gated Time Accumulation mode. This mode allows the internal TCY to increment the respective timer when the gate input signal (T1CK pin) is asserted high. Control bit TGATE (T1CON<6>) must be set to enable this mode. The timer must be enabled (TON = 1) and the timer clock source set to internal (TCS = 0).

When the CPU goes into the Idle mode, the timer will stop incrementing, unless TSIDL = 0. If TSIDL = 1, the timer will resume the incrementing sequence upon termination of the CPU Idle mode.

8.2 Timer Prescaler

The input clock (FOSC/2 or external clock) to the 16-bit Timer, has a prescale option of 1:1, 1:8, 1:64, and 1:256 selected by control bits TCKPS<1:0> (T1CON<5:4>). The prescaler counter is cleared when any of the following occurs:

- a write to the TMR1 register
- clearing of the TON bit (T1CON<15>)
- device Reset such as POR

However, if the timer is disabled (TON = 0), then the timer prescaler cannot be reset since the prescaler clock is halted.

TMR1 is not cleared when T1CON is written. It is cleared by writing to the TMR1 register.

8.3 Timer Operation During Sleep Mode

During CPU Sleep mode, the timer will operate if:

- The timer module is enabled (TON = 1) and
- The timer clock source is selected as external (TCS = 1) and
- The TSYNC bit (T1CON<2>) is asserted to a logic '0', which defines the external clock source as asynchronous

When all three conditions are true, the timer will continue to count up to the period register and be reset to 0x0000.

When a match between the timer and the period register occurs, an interrupt can be generated, if the respective timer interrupt enable bit is asserted.

8.4 Timer Interrupt

The 16-bit timer has the ability to generate an interrupt on period match. When the timer count matches the period register, the T1IF bit is asserted and an interrupt will be generated, if enabled. The T1IF bit must be cleared in software. The timer interrupt flag T1IF is located in the IFS0 control register in the Interrupt Controller.

When the Gated Time Accumulation mode is enabled, an interrupt will also be generated on the falling edge of the gate signal (at the end of the accumulation cycle).

Enabling an interrupt is accomplished via the respective timer interrupt enable bit, T1IE. The timer interrupt enable bit is located in the IEC0 control register in the Interrupt Controller.

© 2006-2014 Microchip Technology Inc.

TABLE 8-1: TIMER1 REGISTER MAP

SFR Name	Addr.	Bit 15	Bit 14	Bit 13	Bit 12	Bit 11	Bit 10	Bit 9	Bit 8	Bit 7	Bit 6	Bit 5	Bit 4	Bit 3	Bit 2	Bit 1	Bit 0	Reset State
TMR1	0100	Timer 1 Register																uuuu uuuu uuuu uuuu
PR1	0102	Period Register 1																1111 1111 1111 1111
T1CON	0104	TON	—	TSIDL	—	—	—	—	—	—	TGATE	TCKPS<1:0>		—	TSYNC	TCS	—	0000 0000 0000 0000

Legend: u = uninitialized bit

Note: Refer to the "*dsPIC30F Family Reference Manual*" (DS70046) for descriptions of register bit fields.

© 2006-2014 Microchip Technology Inc.

NOTES:

© 2006-2014 Microchip Technology Inc.

9.0 TIMER2/3 MODULE

Note: This data sheet summarizes features of this group of dsPIC30F devices and is not intended to be a complete reference source. For more information on the CPU, peripherals, register descriptions and general device functionality, refer to the "*dsPIC30F Family Reference Manual*" (DS70046).

This section describes the 32-bit General Purpose Timer module (Timer2/3) and associated operational modes. Figure 9-1 depicts the simplified block diagram of the 32-bit Timer2/3 module. Figure 9-2 and Figure 9-3 show Timer2/3 configured as two independent 16-bit timers: Timer2 and Timer3, respectively.

Note: The dsPIC30F1010 device does not feature Timer3. Timer2 is a 'Type B' timer and Timer3 is a 'Type C' timer. Please refer to the appropriate timer type in **Section 21.0 "Electrical Characteristics"** of this document.

The Timer2/3 module is a 32-bit timer, which can be configured as two 16-bit timers, with selectable operating modes. These timers are utilized by other peripheral modules such as:

- Input Capture
- Output Compare/Simple PWM

The following sections provide a detailed description, including setup and control registers, along with associated block diagrams for the operational modes of the timers.

The 32-bit timer has the following modes:

- Two independent 16-bit timers (Timer2 and Timer3) with all 16-bit operating modes (except Asynchronous Counter mode)
- Single 32-bit Timer operation
- Single 32-bit Synchronous Counter

Further, the following operational characteristics are supported:

- ADC Event Trigger
- Timer Gate Operation
- Selectable Prescaler Settings
- Timer Operation during Idle and Sleep modes
- Interrupt on a 32-bit Period Register Match

These operating modes are determined by setting the appropriate bit(s) in the 16-bit T2CON and T3CON SFRs.

For 32-bit timer/counter operation, Timer2 is the least significant word and Timer3 is the most significant word of the 32-bit timer.

Note: For 32-bit timer operation, T3CON control bits are ignored. Only T2CON control bits are used for setup and control. Timer 2 clock and gate inputs are utilized for the 32-bit timer module, but an interrupt is generated with the Timer3 interrupt flag (T3IF) and the interrupt is enabled with the Timer3 interrupt enable bit (T3IE).

16-bit Mode: In the 16-bit mode, Timer2 and Timer3 can be configured as two independent 16-bit timers. Each timer can be set up in either 16-bit Timer mode or 16-bit Synchronous Counter mode. See **Section 8.0 "Timer1 Module"** for details on these two operating modes.

The only functional difference between Timer2 and Timer3 is that Timer2 provides synchronization of the clock prescaler output. This is useful for high-frequency external clock inputs.

32-bit Timer Mode: In the 32-bit Timer mode, the timer increments on every instruction cycle up to a match value, preloaded into the combined 32-bit period register PR3/PR2, then resets to '0' and continues to count.

For synchronous 32-bit reads of the Timer2/Timer3 pair, reading the least significant word (TMR2 register) will cause the most significant word to be read and latched into a 16-bit holding register, termed TMR3HLD.

For synchronous 32-bit writes, the holding register (TMR3HLD) must first be written to. When followed by a write to the TMR2 register, the contents of TMR3HLD will be transferred and latched into the MSB of the 32-bit timer (TMR3).

32-bit Synchronous Counter Mode: In the 32-bit Synchronous Counter mode, the timer increments on the rising edge of the applied external clock signal, which is synchronized with the internal phase clocks. The timer counts up to a match value preloaded in the combined 32-bit period register, PR3/PR2, then resets to '0' and continues.

When the timer is configured for the Synchronous Counter mode of operation and the CPU goes into the Idle mode, the timer will stop incrementing, unless the TSIDL (T2CON<13>) bit = 0. If TSIDL = 1, the timer module logic will resume the incrementing sequence upon termination of the CPU Idle mode.

FIGURE 9-1: 32-BIT TIMER2/3 BLOCK DIAGRAM

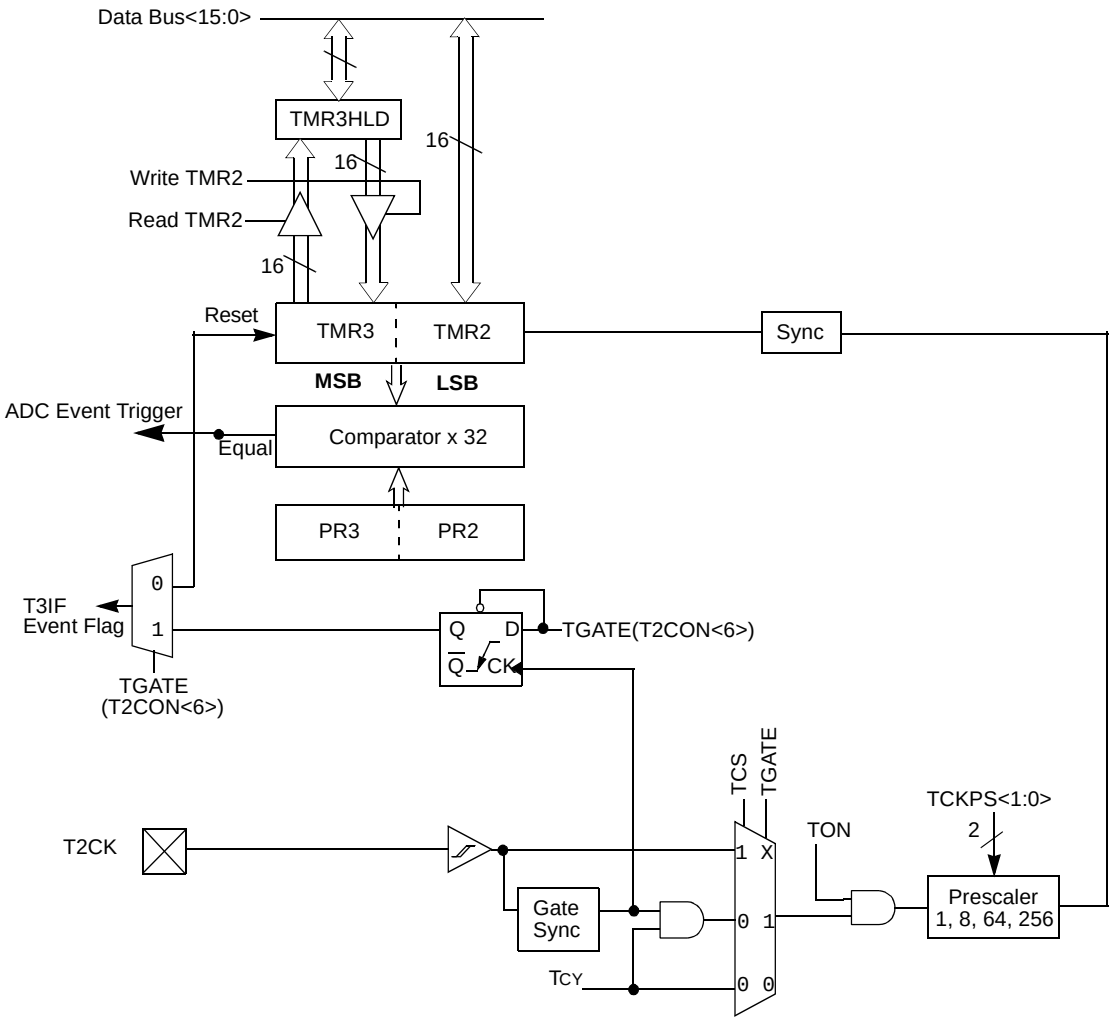

Note: Timer Configuration bit T32, (T2CON<3>) must be set to ‘1’ for a 32-bit timer/counter operation. All control bits are respective to the T2CON register.

© 2006-2014 Microchip Technology Inc.

FIGURE 9-2: 16-BIT TIMER2 BLOCK DIAGRAM

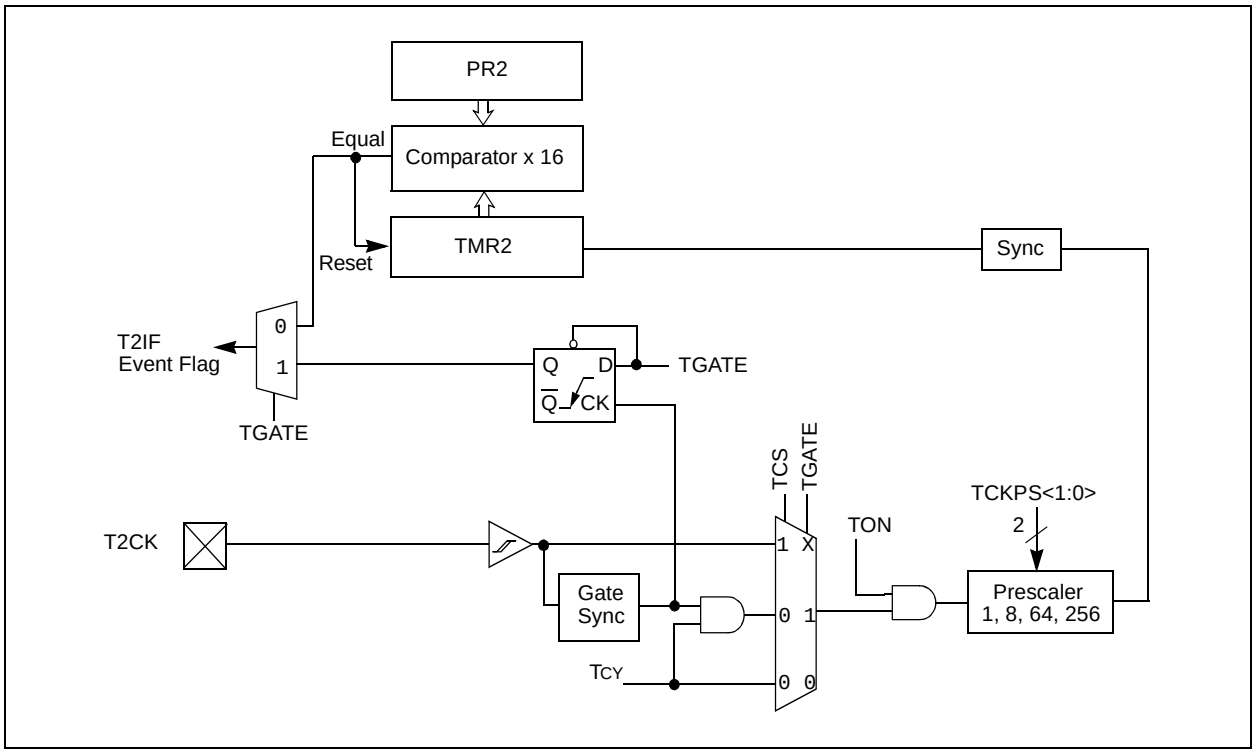

FIGURE 9-3: 16-BIT TIMER3 BLOCK DIAGRAM

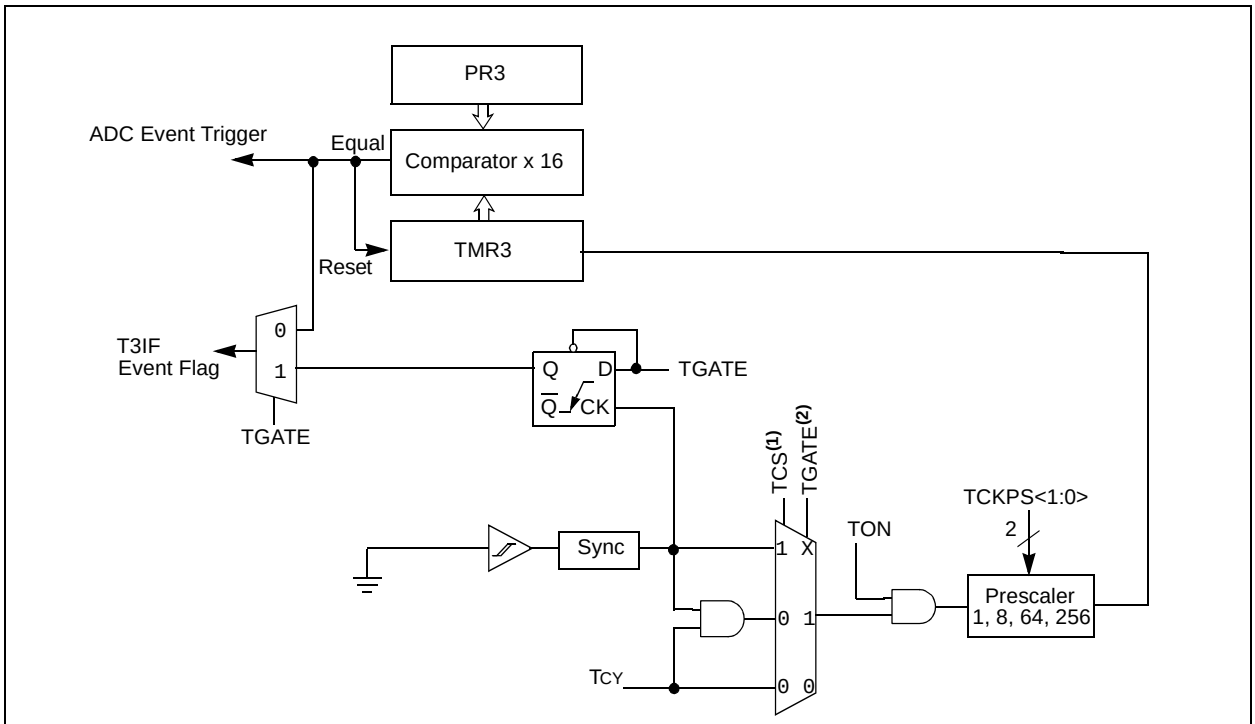

Note: The dsPIC30F202X does not have an external pin input to TIMER3. The following modes should not be used:
1. TCS = 1
2. TCS = 0 and TGATE = 1 (gated time accumulation)

9.1 Timer Gate Operation

The 32-bit timer can be placed in the Gated Time Accumulation mode. This mode allows the internal TCY to increment the respective timer when the gate input signal (T2CK pin) is asserted high. Control bit TGATE (T2CON<6>) must be set to enable this mode. When in this mode, Timer2 is the originating clock source. The TGATE setting is ignored for Timer3. The timer must be enabled (TON = 1) and the timer clock source set to internal (TCS = 0).

The falling edge of the external signal terminates the count operation, but does not reset the timer. The user must reset the timer in order to start counting from zero.

9.2 ADC Event Trigger

When a match occurs between the 32-bit timer (TMR3/TMR2) and the 32-bit combined period register (PR3/PR2), a special ADC trigger event signal is generated by Timer3.

9.3 Timer Prescaler

The input clock (FOSC/2 or external clock) to the timer has a prescale option of 1:1, 1:8, 1:64, and 1:256 selected by control bits TCKPS<1:0> (T2CON<5:4> and T3CON<5:4>). For the 32-bit timer operation, the originating clock source is Timer2. The prescaler operation for Timer3 is not applicable in this mode. The prescaler counter is cleared when any of the following occurs:

- a write to the TMR2/TMR3 register
- clearing either of the TON (T2CON<15> or T3CON<15>) bits to ‘0’
- device Reset such as POR

However, if the timer is disabled (TON = 0), then the Timer 2 prescaler cannot be reset, since the prescaler clock is halted.

TMR2/TMR3 is not cleared when T2CON/T3CON is written.

9.4 Timer Operation During Sleep Mode

During CPU Sleep mode, the timer will not operate, because the internal clocks are disabled.

9.5 Timer Interrupt

The 32-bit timer module can generate an interrupt on period match, or on the falling edge of the external gate signal. When the 32-bit timer count matches the respective 32-bit period register, or the falling edge of the external “gate” signal is detected, the T3IF bit (IFS0<7>) is asserted and an interrupt will be generated if enabled. In this mode, the T3IF interrupt flag is used as the source of the interrupt. The T3IF bit must be cleared in software.

Enabling an interrupt is accomplished via the respective timer interrupt enable bit, T3IE (IEC0<7>).

© 2006-2014 Microchip Technology Inc.

TABLE 9-1: TIMER2/3 REGISTER MAP

SFR Name	Addr.	Bit 15	Bit 14	Bit 13	Bit 12	Bit 11	Bit 10	Bit 9	Bit 8	Bit 7	Bit 6	Bit 5	Bit 4	Bit 3	Bit 2	Bit 1	Bit 0	Reset State
TMR2	0106	Timer2 Register																uuuu uuuu uuuu uuuu
TMR3HLD	0108	Timer3 Holding Register (For 32-bit timer operations only)																uuuu uuuu uuuu uuuu
TMR3	010A	Timer3 Register																uuuu uuuu uuuu uuuu
PR2	010C	Period Register 2																1111 1111 1111 1111
PR3	010E	Period Register 3																1111 1111 1111 1111
T2CON	0110	TON	—	TSIDL	—	—	—	—	—	—	TGATE	TCKPS<1:0>		T32	—	TCS	—	0000 0000 0000 0000
T3CON	0112	TON	—	TSIDL	—	—	—	—	—	—	TGATE	TCKPS<1:0>		—	—	TCS	—	0000 0000 0000 0000

Legend: u = uninitialized bit

Note: Refer to the "*dsPIC30F Family Reference Manual*" (DS70046) for descriptions of register bit fields.

© 2006-2014 Microchip Technology Inc.

NOTES:

© 2006-2014 Microchip Technology Inc.

10.0 INPUT CAPTURE MODULE

Note: This data sheet summarizes features of this group of dsPIC30F devices and is not intended to be a complete reference source. For more information on the CPU, peripherals, register descriptions and general device functionality, refer to the "*dsPIC30F Family Reference Manual*" (DS70046).

This section describes the Input Capture module and associated operational modes. The features provided by this module are useful in applications requiring Frequency (Period) and Pulse measurement. Figure 10-1 depicts a block diagram of the Input Capture module. Input capture is useful for such modes as:

- Frequency/Period/Pulse Measurements
- Additional sources of External Interrupts

The key operational features of the Input Capture module are:

- Simple Capture Event mode
- Timer2 and Timer3 mode selection
- Interrupt on input capture event

These operating modes are determined by setting the appropriate bits in the ICxCON register (where x = 1,2,...,N). The dsPIC DSC devices contain up to 8 capture channels, (i.e., the maximum value of N is 8).

Note: The dsPIC30F1010 devices does not feature a Input Capture module. The dsPIC30F202X devices have one capture input – IC1. The naming of this capture channel is intentional and preserves software compatibility with other dsPIC DSC devices.

FIGURE 10-1: INPUT CAPTURE MODE BLOCK DIAGRAM

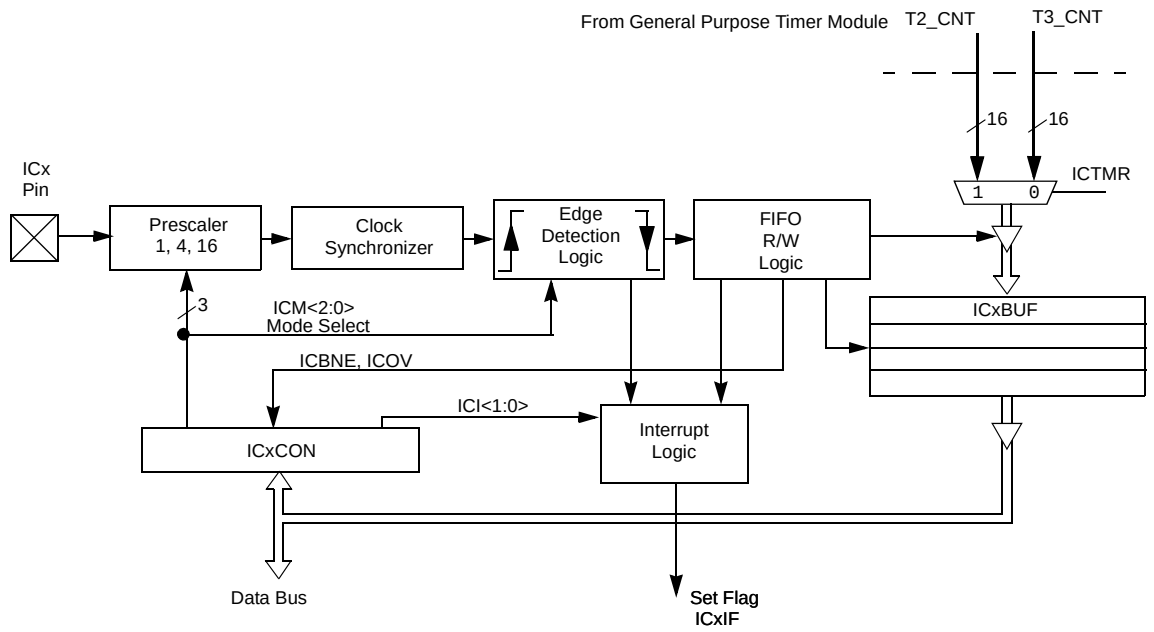

Note: Where 'x' is shown, reference is made to the registers or bits associated to the respective input capture channels 1 through N.

10.1 Simple Capture Event Mode

The simple capture events in the dsPIC30F product family are:

- Capture every falling edge
- Capture every rising edge
- Capture every 4th rising edge
- Capture every 16th rising edge
- Capture every rising and falling edge

These simple Input Capture modes are configured by setting the appropriate bits ICM<2:0> (ICxCON<2:0>).

10.1.1 CAPTURE PRESCALER

There are four input capture prescaler settings, specified by bits ICM<2:0> (ICxCON<2:0>). Whenever the capture channel is turned off, the prescaler counter will be cleared. In addition, any Reset will clear the prescaler counter.

10.1.2 CAPTURE BUFFER OPERATION

Each capture channel has an associated FIFO buffer, which is four 16-bit words deep. There are two status flags, which provide status on the FIFO buffer:

- ICBFNE – Input Capture Buffer Not Empty
- ICOV – Input Capture Overflow

The ICBFNE will be set on the first input capture event and remain set until all capture events have been read from the FIFO. As each word is read from the FIFO, the remaining words are advanced by one position within the buffer.

In the event that the FIFO is full with four capture events and a fifth capture event occurs prior to a read of the FIFO, an Overflow condition will occur and the ICOV bit will be set to a logic ‘1’. The fifth capture event is lost and is not stored in the FIFO. No additional events will be captured until all four events have been read from the buffer.

If a FIFO read is performed after the last read and no new capture event has been received, the read will yield indeterminate results.

10.1.3 TIMER2 AND TIMER3 SELECTION MODE

The input capture module consists of up to 8 input capture channels. Each channel can select between one of two timers for the time base, Timer2 or Timer3.

Selection of the timer resource is accomplished through SFR bit ICTMR (ICxCON<7>). Timer3 is the default timer resource available for the input capture module.

10.1.4 HALL SENSOR MODE

When the input capture module is set for capture on every edge, rising and falling, ICM<2:0> = `001`, the following operations are performed by the input capture logic:

- The input capture interrupt flag is set on every edge, rising and falling.
- The Interrupt on Capture mode setting bits, ICI<1:0>, are ignored, since every capture generates an interrupt.
- A Capture Overflow condition is not generated in this mode.

© 2006-2014 Microchip Technology Inc.

10.2 Input Capture Operation During Sleep and Idle Modes

An input capture event will generate a device wake-up or interrupt, if enabled, if the device is in CPU Idle or Sleep mode.

Independent of the timer being enabled, the input capture module will wake-up from the CPU Sleep or Idle mode when a capture event occurs, if ICM<2:0> = `111` and the interrupt enable bit is asserted. The same wake-up can generate an interrupt, if the conditions for processing the interrupt have been satisfied. The wake-up feature is useful as a method of adding extra external pin interrupts.

10.2.1 INPUT CAPTURE IN CPU SLEEP MODE

CPU Sleep mode allows input capture module operation with reduced functionality. In the CPU Sleep mode, the ICI<1:0> bits are not applicable, and the input capture module can only function as an external interrupt source.

The capture module must be configured for interrupt only on the rising edge (ICM<2:0> = `111`), in order for the input capture module to be used while the device is in Sleep mode. The prescale settings of 4:1 or 16:1 are not applicable in this mode.

10.2.2 INPUT CAPTURE IN CPU IDLE MODE

CPU Idle mode allows input capture module operation with full functionality. In the CPU Idle mode, the Interrupt mode selected by the ICI<1:0> bits are applicable, as well as the 4:1 and 16:1 capture prescale settings, which are defined by control bits ICM<2:0>. This mode requires the selected timer to be enabled. Moreover, the ICSIDL bit must be asserted to a logic '`0`'.

If the input capture module is defined as ICM<2:0> = `111` in CPU Idle mode, the input capture pin will serve only as an external interrupt pin.

10.3 Input Capture Interrupts

The input capture channels have the ability to generate an interrupt, based upon the selected number of capture events. The selection number is set by control bits ICI<1:0> (ICxCON<6:5>).

Each channel provides an interrupt flag (ICxIF) bit. The respective capture channel interrupt flag is located in the corresponding IFSx STATUS register.

Enabling an interrupt is accomplished via the respective capture channel interrupt enable (ICxIE) bit. The capture interrupt enable bit is located in the corresponding IEC Control register.

TABLE 10-1: INPUT CAPTURE REGISTER MAP

SFR Name	Addr.	Bit 15	Bit 14	Bit 13	Bit 12	Bit 11	Bit 10	Bit 9	Bit 8	Bit 7	Bit 6	Bit 5	Bit 4	Bit 3	Bit 2	Bit 1	Bit 0	Reset State
IC1BUF	0140	Input 1 Capture Register																uuuu uuuu uuuu uuuu
IC1CON	0142	—	—	ICSIDL	—	—	—	—	—	ICTMR	ICI<1:0>		ICOV	ICBNE	ICM<2:0>			0000 0000 0000 0000

Legend: u = uninitialized bit

Note: Refer to the "*dsPIC30F Family Reference Manual*" (DS70046) for descriptions of register bit fields.

© 2006-2014 Microchip Technology Inc.

11.0 OUTPUT COMPARE MODULE

Note: This data sheet summarizes features of this group of dsPIC30F devices and is not intended to be a complete reference source. For more information on the CPU, peripherals, register descriptions and general device functionality, refer to the "*dsPIC30F Family Reference Manual*" (DS70046).

This section describes the Output Compare module and associated operational modes. The features provided by this module are useful in applications requiring operational modes such as:

- Generation of Variable Width Output Pulses
- Power Factor Correction

Figure 11-1 depicts a block diagram of the Output Compare module.

The key operational features of the Output Compare module include:

- Timer2 and Timer3 Selection mode
- Simple Output Compare Match mode
- Dual Output Compare Match mode
- Simple PWM mode
- Output Compare during Sleep and Idle modes
- Interrupt on Output Compare/PWM Event

These operating modes are determined by setting the appropriate bits in the 16-bit OCxCON SFR (where x = 1 and 2).

OCxRS and OCxR in the figure represent the Dual Compare registers. In the Dual Compare mode, the OCxR register is used for the first compare and OCxRS is used for the second compare.

FIGURE 11-1: OUTPUT COMPARE MODE BLOCK DIAGRAM

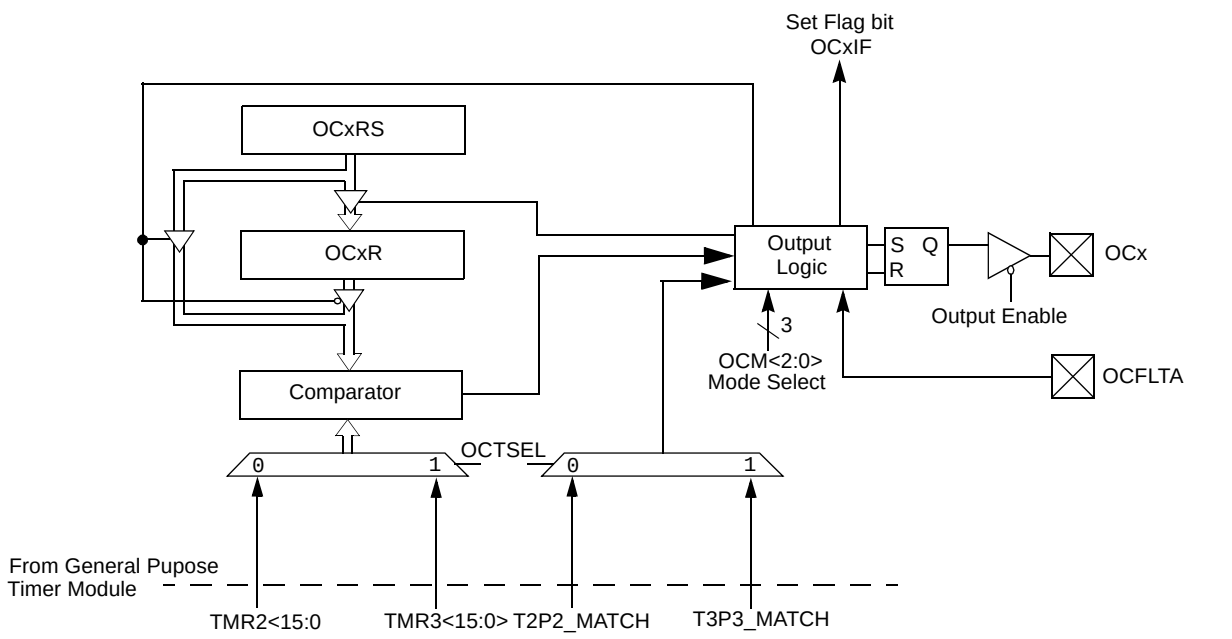

Note: Where 'x' is shown, reference is made to the registers associated with the respective output compare channels 1 and 2.

11.1 Timer2 and Timer3 Selection Mode

Each output compare channel can select between one of two 16-bit timers: Timer2 or Timer3.

The selection of the timers is controlled by the OCTSEL bit (OCxCON<3>). Timer2 is the default timer resource for the Output Compare module.

11.2 Simple Output Compare Match Mode

When control bits OCM<2:0> (OCxCON<2:0>) = 001, 010 or 011, the selected output compare channel is configured for one of three simple Output Compare Match modes:

- Compare forces I/O pin low
- Compare forces I/O pin high
- Compare toggles I/O pin

The OCxR register is used in these modes. The OCxR register is loaded with a value and is compared to the selected incrementing timer count. When a compare occurs, one of these Compare Match modes occurs. If the counter resets to zero before reaching the value in OCxR, the state of the OCx pin remains unchanged.

11.3 Dual Output Compare Match Mode

When control bits OCM<2:0> (OCxCON<2:0>) = 100 or 101, the selected output compare channel is configured for one of two Dual Output Compare modes, which are:

- Single Output Pulse mode
- Continuous Output Pulse mode

11.3.1 SINGLE PULSE MODE

For the user to configure the module for the generation of a single output pulse, the following steps are required (assuming the timer is off):

- Determine instruction cycle time TCY.
- Calculate desired pulse width value based on TCY.
- Calculate time to start pulse from timer start value of 0x0000.
- Write pulse width start and stop times into OCxR and OCxRS compare registers (x denotes channel 1, 2).
- Set timer period register to value equal to, or greater than, value in OCxRS compare register.
- Set OCM<2:0> = 100.
- Enable timer, TON (TxCON<15>) = 1.

To initiate another single pulse, issue another write to set OCM<2:0> = 100.

11.3.2 CONTINUOUS PULSE MODE

For the user to configure the module for the generation of a continuous stream of output pulses, the following steps are required:

- Determine instruction cycle time TCY.
- Calculate desired pulse value based on TCY.
- Calculate timer to start pulse width from timer start value of 0x0000.
- Write pulse width start and stop times into OCxR and OCxRS (x denotes channel 1, 2) compare registers, respectively.
- Set timer period register to value equal to, or greater than, value in OCxRS compare register.
- Set OCM<2:0> = 101.
- Enable timer, TON (TxCON<15>) = 1.

11.4 Simple PWM Mode

When control bits OCM<2:0> (OCxCON<2:0>) = 110 or 111, the selected output compare channel is configured for the PWM mode of operation. When configured for the PWM mode of operation, OCxR is the Main latch (read-only) and OCxRS is the secondary latch. This enables glitchless PWM transitions.

The user must perform the following steps in order to configure the output compare module for PWM operation:

1. Set the PWM period by writing to the appropriate period register.
2. Set the PWM duty cycle by writing to the OCxRS register.
3. Configure the output compare module for PWM operation.
4. Set the TMRx prescale value and enable the Timer, TON (TxCON<15>) = 1.

© 2006-2014 Microchip Technology Inc.

11.4.1 PWM PERIOD

The PWM period is specified by writing to the PRx register. The PWM period can be calculated using Equation 11-1.

EQUATION 11-1: PWM PERIOD

$$\text{PWM period} = [(PRx) + 1] \cdot 4 \cdot T_{OSC} \cdot (\text{TMRx prescale value})$$

PWM frequency is defined as 1/[PWM period].

When the selected TMRx is equal to its respective period register, PRx, the following four events occur on the next increment cycle:

- TMRx is cleared.
- The OCx pin is set.
  - Exception 1: If PWM duty cycle is 0x0000, the OCx pin will remain low.
  - Exception 2: If duty cycle is greater than PRx, the pin will remain high.
- The PWM duty cycle is latched from OCxRS into OCxR.
- The corresponding timer interrupt flag is set.

See Figure 11-1 for key PWM period comparisons. Timer3 is referred to in the figure for clarity.

11.4.2 PWM WITH FAULT PROTECTION INPUT PIN

When control bits OCM<2:0> (OCxCON<2:0>) = 111, Fault protection is enabled via the OCFLTA pin. If the a logic '0' is detected on the OCFLTA pin, the output pins are placed in a high-impedance state. The state remains until:

- the external Fault condition has been removed **and**
- the PWM mode is reenabled by writing to the appropriate control bits

As a result of the Fault condition, the OCxIF interrupt is asserted, and an interrupt will be generated, if enabled. Upon detection of the Fault condition, the OCFLTx bit in the OCxCON register is asserted high. This bit is a read-only bit and will be cleared once the external Fault condition has been removed, and the PWM mode is reenabled by writing the appropriate mode bits, OCM<2:0> in the OCxCON register.

11.5 Output Compare Operation During CPU Sleep Mode

When the CPU enters the Sleep mode, all internal clocks are stopped. Therefore, when the CPU enters the Sleep state, the output compare channel will drive the pin to the active state that was observed prior to entering the CPU Sleep state.

For example, if the pin was high when the CPU entered the Sleep state, the pin will remain high. Likewise, if the pin was low when the CPU entered the Sleep state, the pin will remain low. In either case, the output compare module will resume operation when the device wakes up.

11.6 Output Compare Operation During CPU Idle Mode

When the CPU enters the Idle mode, the output compare module can operate with full functionality.

The output compare channel will operate during the CPU Idle mode if the OCSIDL bit (OCxCON<13>) is at logic '0' and the selected time base (Timer2 or Timer3) is enabled and the TSIDL bit of the selected timer is set to logic '0'.

FIGURE 11-1: PWM OUTPUT TIMING

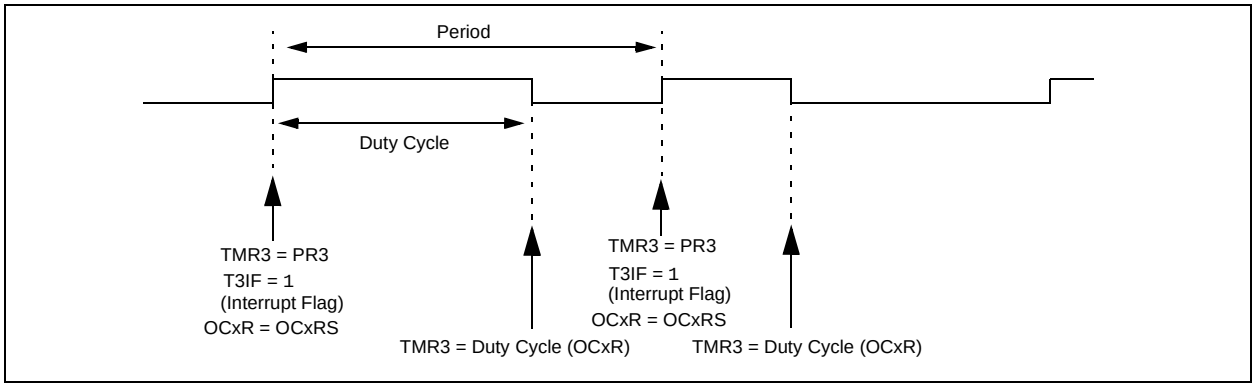

11.7 Output Compare Interrupts

The output compare channels have the ability to generate an interrupt on a compare match, for whichever Match mode has been selected.

For all modes except the PWM mode, when a compare event occurs, the respective interrupt flag (OCxIF) is asserted and an interrupt will be generated, if enabled. The OCxIF bit is located in the corresponding IFS STATUS register, and must be cleared in software. The interrupt is enabled via the respective compare interrupt enable (OCxIE) bit, located in the corresponding IEC Control register.

For the PWM mode, when an event occurs, the respective timer interrupt flag (T2IF or T3IF) is asserted and an interrupt will be generated, if enabled. The IF bit is located in the IFS0 STATUS register, and must be cleared in software. The interrupt is enabled via the respective timer interrupt enable bit (T2IE or T3IE), located in the IEC0 Control register. The output compare interrupt flag is never set during the PWM mode of operation.

© 2006-2014 Microchip Technology Inc.

TABLE 11-1: OUTPUT COMPARE REGISTER MAP

SFR Name	Addr.	Bit 15	Bit 14	Bit 13	Bit 12	Bit 11	Bit 10	Bit 9	Bit 8	Bit 7	Bit 6	Bit 5	Bit 4	Bit 3	Bit 2	Bit 1	Bit 0	Reset State
OC1RS	0180	Output Compare 1 Slave Register																0000 0000 0000 0000
OC1R	0182	Output Compare 1 Master Register																0000 0000 0000 0000
OC1CON	0184	—	—	OCSIDL	—	—	—	—	—	—	—	—	OCFLT	OCTSEL	OCM<2:0>			0000 0000 0000 0000
OC2RS	0186	Output Compare 2 Slave Register																0000 0000 0000 0000
OC2R	0188	Output Compare 2 Master Register																0000 0000 0000 0000
OC2CON	018A	—	—	OCSIDL	—	—	—	—	—	—	—	—	OCFLT	OCTSEL	OCM<2:0>			0000 0000 0000 0000

Note: Refer to the "*dsPIC30F Family Reference Manual*" (DS70046) for descriptions of register bit fields.

© 2006-2014 Microchip Technology Inc.

NOTES:

© 2006-2014 Microchip Technology Inc.

12.0 POWER SUPPLY PWM

The Power Supply PWM (PS PWM) module on the dsPIC30F1010/202X device supports a wide variety of PWM modes and output formats. This PWM module is ideal for power conversion applications such as:

- DC/DC converters
- AC/DC power supplies
- Uninterruptable Power Supply (UPS)

12.1 Features Overview

The PS PWM module incorporates these features:

- Four PWM generators with eight I/O
- Four Independent time bases
- Duty cycle resolution of 1.1 nsec @ 30 MIPS
- Dead-time resolution of 4.2 nsec @ 30 MIPS
- Phase-shift resolution of 4.2 nsec @ 30 MIPS
- Frequency resolution of 8.4 nsec @ 30 MIPS
- Supported PWM modes:
  - Standard Edge-Aligned PWM
  - Complementary PWM
  - Push-Pull PWM
  - Multi-Phase PWM
  - Variable Phase PWM
  - Fixed Off-Time PWM
  - Current Reset PWM
  - Current-Limit PWM
  - Independent Time Base PWM
- On-the-Fly changes to:
  - PWM frequency
  - PWM duty cycle
  - PWM phase shift
- Output override control
- Independent current-limit and Fault inputs
- Special event comparator for scheduling other peripheral events
- Each PWM generator has comparator for triggering ADC conversions.

Figure 12-1 conceptualizes the PWM module in a simplified block diagram. Figure 12-2 illustrates how the module hardware is partitioned for each PWM output pair for the Complementary PWM mode. Each functional unit of the PWM module is discussed in subsequent sections.

The PWM module contains four PWM generators. The module has eight PWM output pins: PWM1H, PWM1L, PWM2H, PWM2L, PWM3H, PWM3L, PWM4H and PWM4L. For complementary outputs, these eight I/O pins are grouped into H/L pairs.

12.2 Description

The PWM module is designed for applications that require (a) high resolution at high PWM frequencies, (b) the ability to drive standard push-pull or half bridge converters or (c) the ability to create multi-phase PWM outputs.

Two common, medium-power converter topologies are Push-Pull and Half-Bridge. These designs require the PWM output signal to be switched between alternate pins, as provided by the Push-Pull PWM mode.

Phase-shifted PWM describes the situation where each PWM generator provides outputs, but the phase relationship between the generator outputs is specifiable and changeable.

Multi-Phase PWM is often used to improve DC-DC converter load transient response, and reduce the size of output filter capacitors and inductors. Multiple DC/DC converters are often operated in parallel but phase shifted in time. A single PWM output operating at 250 KHz has a period of 4 µsec. But an array of four PWM channels, staggered by 1 µsec each, yields an effective switching frequency of 1 MHz. Multi-phase PWM applications typically use a fixed-phase relationship.

Variable Phase PWM is useful in Zero Voltage Transition (ZVT) power converters. Here the PWM duty cycle is always 50%, and the power flow is controlled by varying the relative phase shift between the two PWM generators.

Note: The PLL must be enabled for the PS PWM module to function. This is achieved by using the FNOSC<1:0> bits in the FOSCSEL Configuration register.

FIGURE 12-1: SIMPLIFIED CONCEPTUAL BLOCK DIAGRAM OF POWER SUPPLY PWM

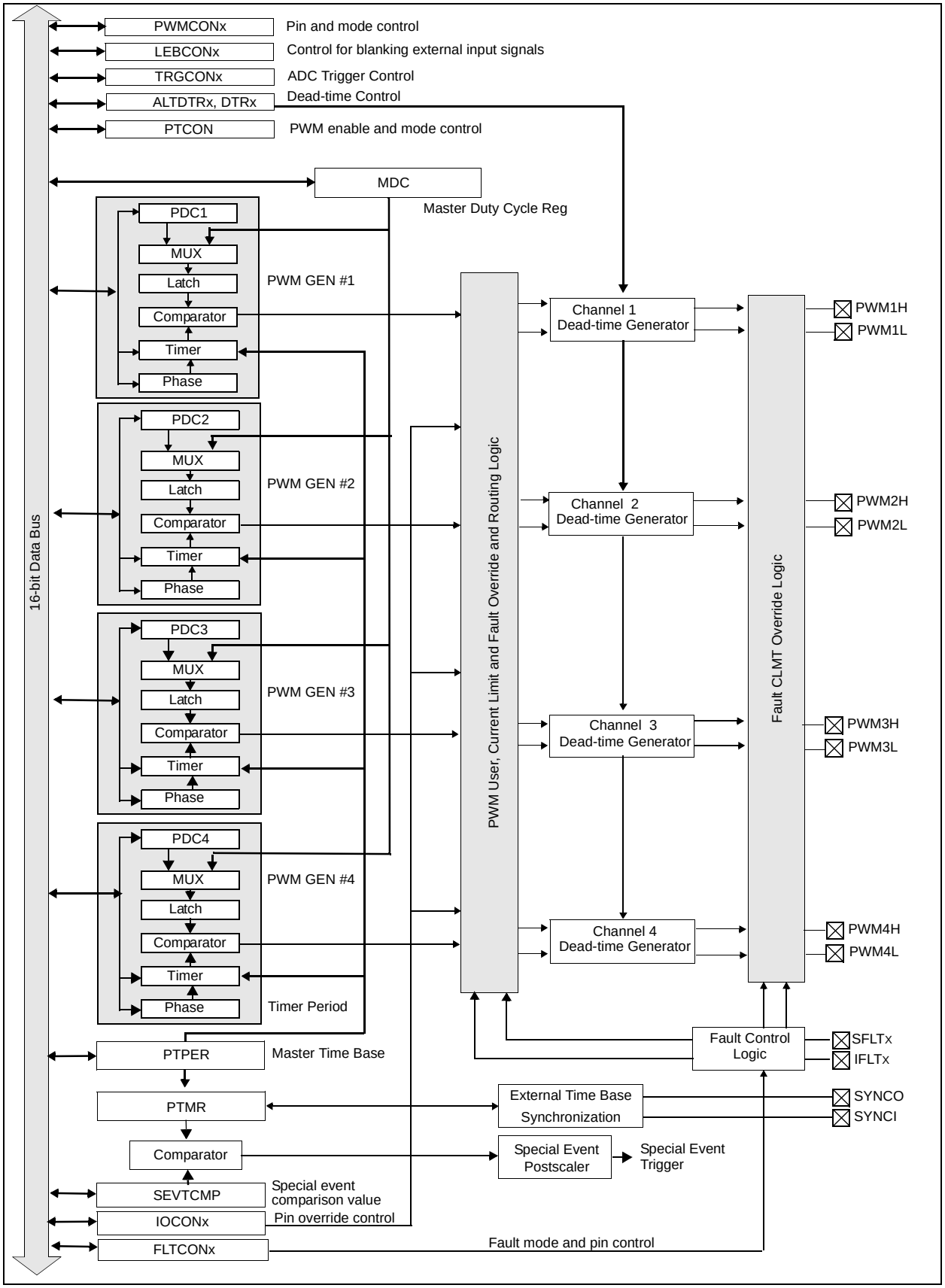

© 2006-2014 Microchip Technology Inc.

FIGURE 12-2: PARTITIONED OUTPUT PAIR, COMPLEMENTARY PWM MODE

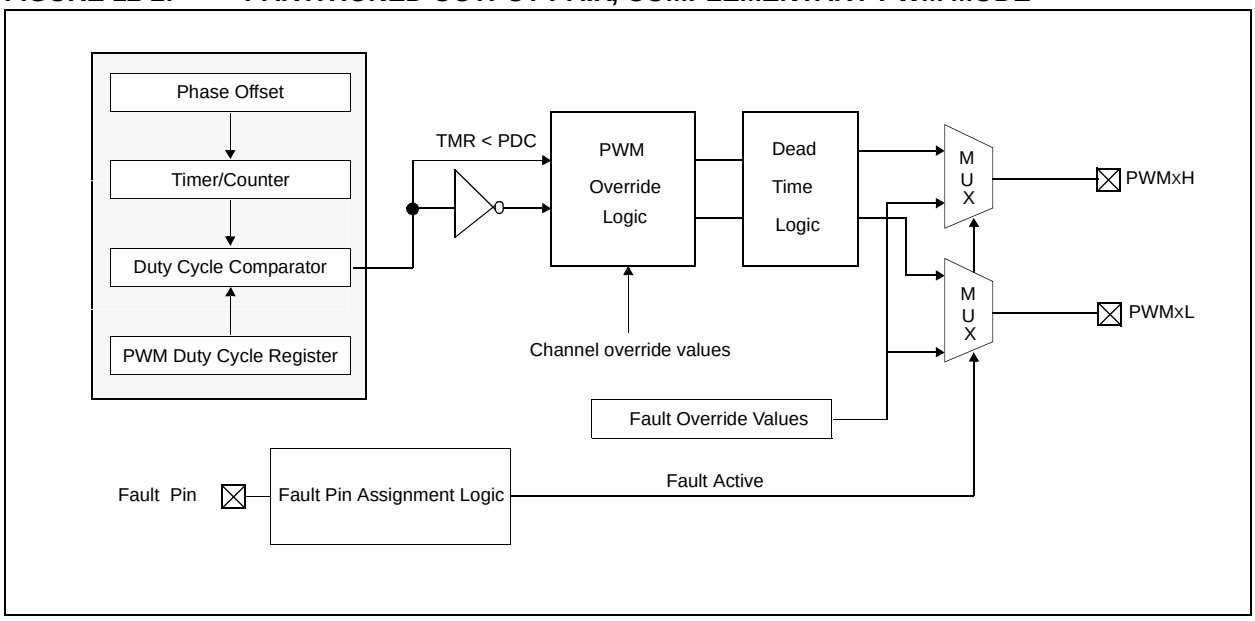

12.3 Control Registers

The following registers control the operation of the Power Supply PWM Module.

- PTCON: PWM Time Base Control Register
- PTPER: Primary Time Base Register
- SEVTCMP: PWM Special Event Compare Register
- MDC: PWM Master Duty Cycle Register
- PWMCONx: PWM Control Register
- PDCx: PWM Generator Duty Cycle Register
- PHASEx: PWM Phase-Shift Register
  (PWM Period Register when module is configured for individual period mode)
- DTRx: PWM Dead-Time Register
- ALTDTRx: PWM Alternate Dead-Time Register
- TRGCONx: PWM TRIGGER Control Register
- IOCONx: PWM I/O Control Register
- FCLCONx: PWM Fault Current-Limit Control Register
- TRIGx: PWM Trigger Compare Value Register
- LEBCONx: Leading Edge Blanking Control Register

REGISTER 12-1: PTCON: PWM TIME BASE CONTROL REGISTER

R/W-0	U-0	R/W-0	R/W-0	R/W-0	R/W-0	R/W-0	R/W-0
PTEN	—	PTSIDL	SESTAT	SEIEN	EIPU	SYNCPOL	SYNCOEN
bit 15							bit 8

R/W-0	R/W-0	R/W-0	R/W-0	R/W-0	R/W-0	R/W-0	R/W-0
SYNCEN	SYNCSRC<2:0>			SEVTPS<3:0>			
bit 7							bit 0

Legend:			
R = Readable bit	W = Writable bit	U = Unimplemented bit, read as ‘0’	
-n = Value at POR	‘1’ = Bit is set	‘0’ = Bit is cleared	x = Bit is unknown

bit 15 **PTEN:** PWM Module Enable bit
`1` = PWM module is enabled
`0` = PWM module is disabled

bit 14 **Unimplemented:** Read as ‘`0`’

bit 13 **PTSIDL:** PWM Time Base Stop in Idle Mode bit
`1` = PWM time base halts in CPU Idle mode
`0` = PWM time base runs in CPU Idle mode

bit 12 **SESTAT:** Special Event Interrupt Status bit
`1` = Special Event Interrupt is pending
`0` = Special Event Interrupt is not pending

bit 11 **SEIEN:** Special Event Interrupt Enable bit
`1` = Special Event Interrupt is enabled
`0` = Special Event Interrupt is disabled

bit 10 **EIPU:** Enable Immediate Period Updates bit
`1` = Active Period register is updated immediately
`0` = Active Period register updates occur on PWM cycle boundaries

bit 9 **SYNCPOL:** Synchronize Input Polarity bit
`1` = SYNCIN polarity is inverted (low active)
`0` = SYNCIN is high active

bit 8 **SYNCOEN:** Primary Time Base Sync Enable bit
`1` = SYNCO output is enabled
`0` = SYNCO output is disabled

bit 7 **SYNCEN:** External Time Base Synchronization Enable bit
`1` = External synchronization of primary time base is enabled
`0` = External synchronization of primary time base is disabled

bit 6-4 **SYNCSRC<2:0>:** Sync Source Selection bits
`000` = SYNCI
`001` = Reserved
.
.
`111` = Reserved

bit 3-0 **SEVTPS<3:0>:** PWM Special Event Trigger Output Postscale Select bits
`0000` = 1:1 Postscale
`0001` = 1:2 Postscale
||
||
`1111` = 1:16 Postscale

© 2006-2014 Microchip Technology Inc.

REGISTER 12-2: PTPER: PRIMARY TIME BASE REGISTER

R/W-0	R/W-0	R/W-0	R/W-0	R/W-0	R/W-0	R/W-0	R/W-0
PTPER <15:8>							
bit 15							bit 8

R/W-0	R/W-0	R/W-0	R/W-0	R/W-0	U-0	U-0	U-0
PTPER <7:3>					—	—	—
bit 7							bit 0

Legend:			
R = Readable bit	W = Writable bit	U = Unimplemented bit, read as ‘0’	
-n = Value at POR	‘1’ = Bit is set	‘0’ = Bit is cleared	x = Bit is unknown

bit 15-3 Primary Time Base (PTMR) Period Value bits

bit 2-0 **Unimplemented:** Read as ‘0’

REGISTER 12-3: SEVTCMP: PWM SPECIAL EVENT COMPARE REGISTER

R/W-0	R/W-0	R/W-0	R/W-0	R/W-0	R/W-0	R/W-0	R/W-0
SEVTCMP <15:8>							
bit 15							bit 8

R/W-0	R/W-0	R/W-0	R/W-0	R/W-0	U-0	U-0	U-0
SEVTCMP <7:3>					—	—	—
bit 7							bit 0

Legend:			
R = Readable bit	W = Writable bit	U = Unimplemented bit, read as ‘0’	
-n = Value at POR	‘1’ = Bit is set	‘0’ = Bit is cleared	x = Bit is unknown

bit 15-3 Special Event Compare Count Value bits

bit 2-0 **Unimplemented:** Read as ‘0’

REGISTER 12-4: MDC: PWM MASTER DUTY CYCLE REGISTER

R/W-0	R/W-0	R/W-0	R/W-0	R/W-0	R/W-0	R/W-0	R/W-0
MDC<15:8>							
bit 15							bit 8

R/W-0	R/W-0	R/W-0	R/W-0	R/W-0	R/W-0	R/W-0	R/W-0
MDC<7:0>							
bit 7							bit 0

Legend:			
R = Readable bit	W = Writable bit	U = Unimplemented bit, read as ‘0’	
-n = Value at POR	‘1’ = Bit is set	‘0’ = Bit is cleared	x = Bit is unknown

bit 15-0 Master PWM Duty Cycle Value bits(1)

Note 1: The minimum value for this register is 0x0008 and the maximum value is 0xFFEF.

REGISTER 12-5: PWMCONx: PWM CONTROL REGISTER

HS/HC-0	HS/HC-0	HS/HC-0	R/W-0	R/W-0	R/W-0	R/W-0	R/W-0
FLTSTAT	CLSTAT	TRGSTAT	FLTIEN	CLIEN	TRGIEN	ITB	MDCS
bit 15							bit 8

R/W-0	R/W-0	U-0	U-0	U-0	U-0	R/W-0	R/W-0
DTC<1:0>		—	—	—	—	XPRES	IUE
bit 7							bit 0

Legend:			
R = Readable bit	W = Writable bit	U = Unimplemented bit, read as ‘0’	
-n = Value at POR	‘1’ = Bit is set	‘0’ = Bit is cleared	x = Bit is unknown

bit 15 **FLTSTAT:** Fault Interrupt Status
`1` = Fault Interrupt is pending
`0` = No Fault Interrupt is pending
This bit is cleared by setting FLTIEN = `0`.

Note: Software must clear the interrupt status here, and the corresponding IFS bit in Interrupt Controller.

bit 14 **CLSTAT:** Current-Limit Interrupt Status bit
`1` = Current-limit interrupt is pending
`0` = No current-limit interrupt is pending
This bit is cleared by setting CLIEN = `0`.

Note: Software must clear the interrupt status here, and the corresponding IFS bit in Interrupt Controller.

bit 13 **TRGSTAT:** Trigger Interrupt Status bit
`1` = Trigger interrupt is pending
`0` = No trigger interrupt is pending
This bit is cleared by setting TRGIEN = `0`.

bit 12 **FLTIEN:** Fault Interrupt Enable bit
`1` = Fault interrupt enabled
`0` = Fault interrupt disabled and FLTSTAT bit is cleared

© 2006-2014 Microchip Technology Inc.

REGISTER 12-5: PWMCONx: PWM CONTROL REGISTER (CONTINUED)

bit 11 **CLIEN:** Current-Limit Interrupt Enable bit
1 = Current-limit interrupt enabled
0 = Current-limit interrupt disabled and CLSTAT bit is cleared

bit 10 **TRGIEN:** Trigger Interrupt Enable bit
1 = A trigger event generates an interrupt request
0 = Trigger event interrupts are disabled and TRGSTAT bit is cleared

bit 9 **ITB:** Independent Time Base Mode bit
1 = Phasex register provides time base period for this PWM generator
0 = Primary time base provides timing for this PWM generator

bit 8 **MDCS:** Master Duty Cycle Register Select bit
1 = MDC register provides duty cycle information for this PWM generator
0 = DCx register provides duty cycle information for this PWM generator

bit 7-6 **DTC<1:0>:** Dead-time Control bits
00 = Positive dead time actively applied for all output modes
01 = Negative dead time actively applied for all output modes
10 = Dead-time function is disabled
11 = Reserved

bit 5-2 **Unimplemented:** Read as '0'

bit 1 **XPRES:** External PWM Reset Control bit
1 = Current-limit source resets time base for this PWM generator if it is in independent time base mode
0 = External pins do not affect PWM time base

bit 0 **IUE:** Immediate Update Enable bit
1 = Updates to the active PDC registers are immediate
0 = Updates to the active PDC registers are synchronized to the PWM time base

REGISTER 12-6: PDCx: PWM GENERATOR DUTY CYCLE REGISTER

R/W-0	R/W-0	R/W-0	R/W-0	R/W-0	R/W-0	R/W-0	R/W-0
PDCx<15:8>							
bit 15							bit 8

R/W-0	R/W-0	R/W-0	R/W-0	R/W-0	R/W-0	R/W-0	R/W-0
PDCx<7:0>							
bit 7							bit 0

Legend:			
R = Readable bit	W = Writable bit	U = Unimplemented bit, read as '0'	
-n = Value at POR	'1' = Bit is set	'0' = Bit is cleared	x = Bit is unknown

bit 15-0 PWM Generator #x Duty Cycle Value bits(1)

Note 1: The minimum value for this register is 0x0008 and the maximum value is 0xFFEF.

REGISTER 12-7: PHASEx: PWM PHASE-SHIFT REGISTER

R/W-0	R/W-0	R/W-0	R/W-0	R/W-0	R/W-0	R/W-0	R/W-0
PHASEx<15:8>							
bit 15							bit 8

R/W-0	R/W-0	R/W-0	R/W-0	R/W-0	R/W-0	U-0	U-0
PHASEx<7:2>						—	—
bit 7							bit 0

Legend:			
R = Readable bit	W = Writable bit	U = Unimplemented bit, read as ‘0’	
-n = Value at POR	‘1’ = Bit is set	‘0’ = Bit is cleared	x = Bit is unknown

bit 15-2 **PHASEx<15:2>:** PWM Phase-Shift Value or Independent Time Base Period for this PWM Generator bits

Note: If used as an independent time base, bits <3:2> are not used.

bit 1-0 **Unimplemented:** Read as ‘0’

REGISTER 12-8: DTRx: PWM DEAD-TIME REGISTER

U-0	U-0	R/W-0	R/W-0	R/W-0	R/W-0	R/W-0	R/W-0
—	—	DTRx<13:8>					
bit 15							bit 8

R/W-0	R/W-0	R/W-0	R/W-0	R/W-0	R/W-0	U-0	U-0
DTRx<7:2>						—	—
bit 7							bit 0

Legend:			
R = Readable bit	W = Writable bit	U = Unimplemented bit, read as ‘0’	
-n = Value at POR	‘1’ = Bit is set	‘0’ = Bit is cleared	x = Bit is unknown

bit 15-14 **Unimplemented:** Read as ‘0’

bit 13-2 **DTRx<13:2>:** Unsigned 12-bit Dead-Time Value bits for PWMx Dead-Time Unit bits

bit 1-0 **Unimplemented:** Read as ‘0’

© 2006-2014 Microchip Technology Inc.

REGISTER 12-9: ALTDTRx: PWM ALTERNATE DEAD-TIME REGISTER

U-0	U-0	R/W-0	R/W-0	R/W-0	R/W-0	R/W-0	R/W-0
—	—	ALTDTRx<13:8>					
bit 15							bit 8

R/W-0	R/W-0	R/W-0	R/W-0	R/W-0	R/W-0	U-0	U-0
ALTDTR <7:2>						—	—
bit 7							bit 0

Legend:			
R = Readable bit	W = Writable bit	U = Unimplemented bit, read as ‘0’	
-n = Value at POR	‘1’ = Bit is set	‘0’ = Bit is cleared	x = Bit is unknown

bit 15-14 **Unimplemented:** Read as ‘0’

bit 13-2 **ALTDTRx<13:2>:** Unsigned 12-bit Dead-Time Value bits for PWMx Dead-Time Unit bits

bit 1-0 **Unimplemented:** Read as ‘0’

REGISTER 12-10: TRGCONx: PWM TRIGGER CONTROL REGISTER

R/W-0	R/W-0	R/W-0	U-0	U-0	U-0	U-0	U-0
TRGDIV<2:0>			—	—	—	—	—
bit 15							bit 8

U-0	U-0	R/W-0	R/W-0	R/W-0	R/W-0	R/W-0	R/W-0
—	—	TRGSTRT<5:0>					
bit 7							bit 0

Legend:			
R = Readable bit	W = Writable bit	U = Unimplemented bit, read as ‘0’	
-n = Value at POR	‘1’ = Bit is set	‘0’ = Bit is cleared	x = Bit is unknown

bit 15-13 **TRGDIV<2:0>:** Trigger Output Divider bits
000 = Trigger output for every trigger event
001 = Trigger output for every 2nd trigger event
010 = Trigger output for every 3rd trigger event
011 = Trigger output for every 4th trigger event
100 = Trigger output for every 5th trigger event
101 = Trigger output for every 6th trigger event
110 = Trigger output for every 7th trigger event
111 = Trigger output for every 8th trigger event

bit 12-6 **Unimplemented:** Read as ‘0’

bit 5-0 **TRGSTRT<5:0>:** Trigger Postscaler Start Enable Select bits
This value specifies the ROLL counter value needed for a match that will then enable the trigger postscaler logic to begin counting trigger events.

REGISTER 12-11: IOCONx: PWM I/O CONTROL REGISTER

R/W-0	R/W-0	R/W-0	R/W-0	R/W-0	R/W-0	R/W-0	R/W-0
PENH	PENL	POLH	POLL	PMOD<1:0>		OVRENH	OVRENL
bit 15							bit 8

R/W-0	R/W-0	R/W-0	R/W-0	R/W-0	R/W-0	U-0	R/W-0
OVRDAT<1:0>		FLTDAT<1:0>		CLDAT<1:0>		—	OSYNC
bit 7							bit 0

Legend:			
R = Readable bit	W = Writable bit	U = Unimplemented bit, read as ‘0’	
-n = Value at POR	‘1’ = Bit is set	‘0’ = Bit is cleared	x = Bit is unknown

bit 15 **PENH:** PWMH Output Pin Ownership bit
1 = PWM module controls PWMxH pin
0 = GPIO module controls PWMxH pin

bit 14 **PENL:** PWML Output Pin Ownership bit
1 = PWM module controls PWMxL pin
0 = GPIO module controls PWMxL pin

bit 13 **POLH:** PWMH Output Pin Polarity bit
1 = PWMxH pin is low active
0 = PWMxH pin is high active

bit 12 **POLL:** PWML Output Pin Polarity bit
1 = PWMxL pin is low active
0 = PWMxL pin is high active

bit 11-10 **PMOD<1:0>:** PWM #x I/O Pin Mode bits
00 = PWM I/O pin pair is in the Complementary Output mode
01 = PWM I/O pin pair is in the Independent Output mode
10 = PWM I/O pin pair is in the Push-Pull Output mode
11 = Reserved

bit 9 **OVRENH:** Override Enable for PWMxH Pin bit
1 = OVRDAT<1> provides data for output on PWMxH pin
0 = PWM generator provides data for PWMxH pin

bit 8 **OVRENL:** Override Enable for PWMxL Pin bit
1 = OVRDAT<0> provides data for output on PWMxL pin
0 = PWM generator provides data for PWMxL pin

bit 7-6 **OVRDAT<1:0>:** Data for PWMxH,L Pins if Override is Enabled bits
If OVERENH = 1 then OVRDAT<1> provides data for PWMxH
If OVERENL = 1 then OVRDAT<0> provides data for PWMxL

bit 5-4 **FLTDAT<1:0>:** Data for PWMxH,L Pins if FLTMODE is Enabled bits
If Fault active, then FLTDAT<1> provides data for PWMxH
If Fault active, then FLTDAT<0> provides data for PWMxL

bit 3-2 **CLDAT<1:0>:** Data for PWMxH,L Pins if CLMODE is Enabled bits
If current limit active, then CLDAT<1> provides data for PWMxH
If current limit active, then CLDAT<0> provides data for PWMxL

bit 1 **Unimplemented:** Read as ‘0’

bit 0 **OSYNC:** Output Override Synchronization bit
1 = Output overrides via the OVRDAT<1:0> bits are synchronized to the PWM time base
0 = Output overrides via the OVDDAT<1:0> bits occur on next clock boundary

© 2006-2014 Microchip Technology Inc.

REGISTER 12-12: FCLCONx: PWM FAULT CURRENT-LIMIT CONTROL REGISTER

U-0	U-0	U-0	R/W-0	R/W-0	R/W-0	R/W-0	R/W-0
—	—	—	CLSRC<3:0>				CLPOL
bit 15							bit 8

R/W-0	R/W-0	R/W-0	R/W-0	R/W-0	R/W-0	R/W-0	R/W-0
CLMODE	FLTSRC<3:0>				FLTPOL	FLTMOD<1:0>	
bit 7							bit 0

Legend:			
R = Readable bit	W = Writable bit	U = Unimplemented bit, read as ‘0’	
-n = Value at POR	‘1’ = Bit is set	‘0’ = Bit is cleared	x = Bit is unknown

bit 15-13 **Unimplemented:** Read as ‘0’

bit 12-9 **CLSRC<3:0>:** Current-Limit Control Signal Source Select for PWM #X Generator bits
0000 = Analog Comparator #1
0001 = Analog Comparator #2
0010 = Analog Comparator #3
0011 = Analog Comparator #4

0100 = Reserved
0101 = Reserved
0110 = Reserved
0111 = Reserved

1000 = Shared Fault #1 (SFLT1)
1001 = Shared Fault #2 (SFLT2)
1020 = Shared Fault #3 (SFLT3)
1011 = Shared Fault #4 (SFLT4)

1100 = Reserved
1101 = Independent Fault #2 (IFLT2)
1110 = Reserved
1111 = Independent Fault #4 (IFLT4)

bit 8 **CLPOL:** Current-Limit Polarity for PWM Generator #X bit
1 = The selected current-limit source is low active
0 = The selected current-limit source is high active

bit 7 **CLMODE:** Current-Limit Mode Enable for PWM Generator #X bit
1 = Current-limit function is enabled
0 = Current-limit function is disabled

REGISTER 12-12: FCLCONx: PWM FAULT CURRENT-LIMIT CONTROL REGISTER (CONTINUED)

bit 6-3 **FLTSRC<3:0>:** Fault Control Signal Source Select for PWM Generator #X bits
0000 = Analog Comparator #1
0001 = Analog Comparator #2
0010 = Analog Comparator #3
0011 = Analog Comparator #4

0100 = Reserved
0101 = Reserved
0110 = Reserved
0111 = Reserved

1000 = Shared Fault #1 (SFLT1)
1001 = Shared Fault #2 (SFLT2)
1020 = Shared Fault #3 (SFLT3)
1011 = Shared Fault #4 (SFLT4)

1100 = Reserved
1101 = Independent Fault #2 (IFLT2)
1110 = Reserved
1111 = Independent Fault #4 (IFLT4)

bit 2 **FLTPOL:** Fault Polarity for PWM Generator #X bit
1 = The selected Fault source is low active
0 = The selected Fault source is high active

bit 1-0 **FLTMOD<1:0>:** Fault Mode for PWM Generator #x bits
00 = The selected Fault source forces PWMxH, PWMxL pins to FLTDAT values (latched condition)
01 = The selected Fault source forces PWMxH, PWMxL pins to FLTDAT values (cycle)
10 = Reserved
11 = Fault input is disabled

© 2006-2014 Microchip Technology Inc.

REGISTER 12-13: TRIGx: PWM TRIGGER COMPARE VALUE REGISTER

R/W-0	R/W-0	R/W-0	R/W-0	R/W-0	R/W-0	R/W-0	R/W-0
TRGCMP<15:8>							
bit 15							bit 8

R/W-0	R/W-0	R/W-0	R/W-0	R/W-0	U-0	U-0	U-0
TRGCMP<7:3>					—	—	—
bit 7							bit 0

Legend:			
R = Readable bit	W = Writable bit	U = Unimplemented bit, read as ‘0’	
-n = Value at POR	‘1’ = Bit is set	‘0’ = Bit is cleared	x = Bit is unknown

bit 15-3 **TRGCMP<15:3>:** Trigger Control Value bits(1)
Register contains the compare value for PWMx time base for generating a trigger to the ADC module for initiating a sample and conversion process, or generating a trigger interrupt.

bit 2-0 **Unimplemented:** Read as ‘0’

Note 1: The minimum usable value for this register is 0x0008
A value of 0x0000 does not produce a trigger.
If the TRIGx value is being calculated based on duty cycle value, you must ensure that a minimum TRIGx value is written into the register at all times.

REGISTER 12-14: LEBCONx: LEADING EDGE BLANKING CONTROL REGISTER

R/W-0	R/W-0	R/W-0	R/W-0	R/W-0	R/W-0	R/W-0	R/W-0
PHR	PHF	PLR	PLF	FLTLEBEN	CLLEBEN	LEB<9:8>	
bit 15							bit 8

R/W-0	R/W-0	R/W-0	R/W-0	R/W-0	U-0	U-0	U-0
LEB<7:3>					—	—	—
bit 7							bit 0

Legend:			
R = Readable bit	W = Writable bit	U = Unimplemented bit, read as ‘0’	
-n = Value at POR	‘1’ = Bit is set	‘0’ = Bit is cleared	x = Bit is unknown

bit 15 **PHR:** PWMH Rising Edge Trigger Enable bit
`1` = Rising edge of PWMH will trigger LEB counter
`0` = LEB ignores rising edge of PWMH

bit 14 **PHL:** PWMH Falling Edge Trigger Enable bit
`1` = Falling edge of PWMH will trigger LEB counter
`0` = LEB ignores falling edge of PWMH

bit 13 **PLR:** PWML Rising Edge Trigger Enable bit
`1` = Rising edge of PWML will trigger LEB counter
`0` = LEB ignores rising edge of PWML

bit 12 **PLF:** PWML Falling Edge Trigger Enable bit
`1` = Falling edge of PWML will trigger LEB counter
`0` = LEB ignores falling edge of PWML

bit 11 **FLTLEBEN:** Fault Input Leading Edge Blanking Enable bit
`1` = Leading Edge Blanking is applied to selected Fault Input
`0` = Leading Edge Blanking is not applied to selected Fault Input

bit 10 **CLLEBEN:** Current-Limit Leading Edge Blanking Enable bit
`1` = Leading Edge Blanking is applied to selected Current-Limit Input
`0` = Leading Edge Blanking is not applied to selected Current-Limit Input

bit 9-3 **LEB:** Leading Edge Blanking for Current-Limit and Fault Inputs bits
Value is 8 nsec increments

bit 2-0 **Unimplemented:** Read as ‘`0`’

© 2006-2014 Microchip Technology Inc.

12.4 Module Functionality

The PS PWM module is a very high-speed design that provides capabilities not found in other PWM generators. The module supports these PWM modes:

- Standard Edge-Aligned PWM mode
- Complementary PWM mode
- Push-Pull PWM mode
- Multi-Phase PWM mode
- Variable Phase PWM mode
- Current-Limit PWM mode
- Constant Off-time PWM mode
- Current Reset PWM mode
- Independent Time Base PWM mode

12.4.1 STANDARD EDGE-ALIGNED PWM MODE

Standard Edge-Aligned mode (Figure 12-3) is the basic PWM mode used by many power converter topologies such as “Buck”, “Boost” and “Forward”. To create the edge-aligned PWM, a timer/counter circuit counts upward from zero to a specified maximum value for the Period. Another register contains the value for Duty Cycle, which is constantly compared to the timer (Period) value. While the timer/counter value is less than or equal to the duty cycle value, the PWM output signal is asserted. When the timer value exceeds the duty cycle value, the PWM signal is deasserted. When the timer is greater than the period value, the timer is reset, and the process repeats.

FIGURE 12-3: EDGE-ALIGNED PWM

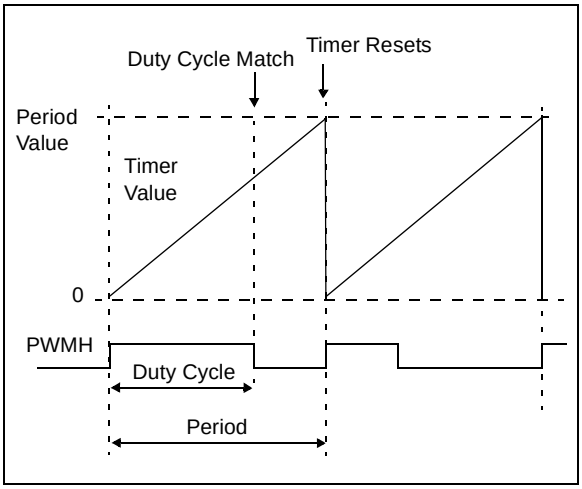

12.4.2 COMPLEMENTARY PWM MODE

Complementary PWM is generated in a manner similar to standard Edge-Aligned PWM. Complementary mode provides a second PWM output signal on the PWML pin that is the complement of the primary PWM signal (PWMH). Complementary mode PWM is shown in Figure 12-4.

FIGURE 12-4: COMPLEMENTARY PWM

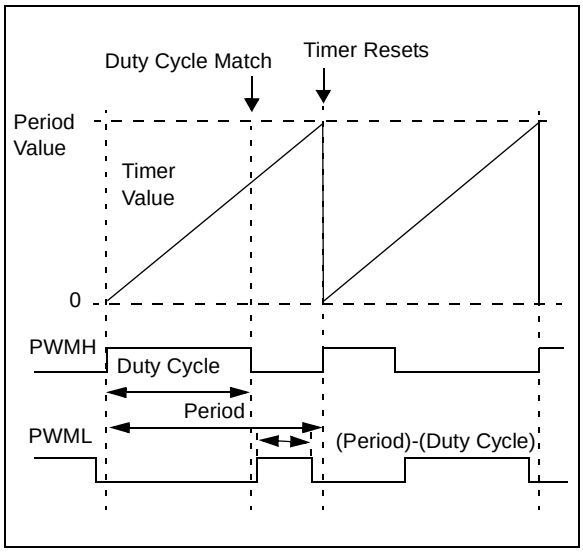

12.4.3 PUSH-PULL PWM MODE

The Push-Pull mode shown in Figure 12-5 is a version of the standard Edge-Aligned PWM mode where the active PWM signal is alternately outputted on one of two PWM pins. There is no complementary PWM output available. This mode is useful in transformer-based power converters. Transformer-based circuits must avoid any direct currents that will cause their cores to saturate. The Push-Pull mode ensures that the duty cycle of the two phases is identical, thus yielding a net DC bias of zero.

FIGURE 12-5: PUSH-PULL PWM

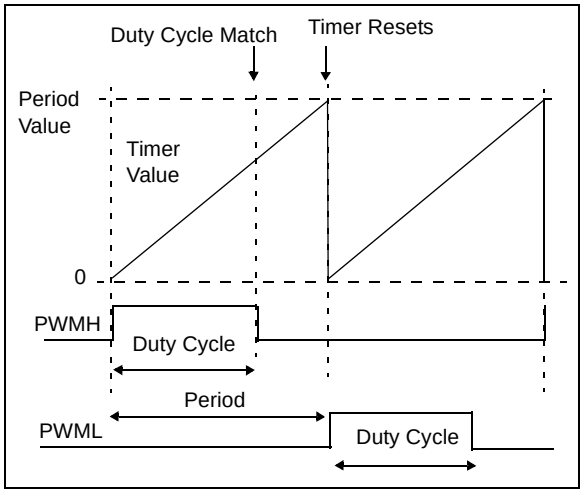

12.4.4 MULTI-PHASE PWM MODE

Multi-Phase PWM, as shown in Figure 12-6, uses phase-shift values in the Phase registers to shift the PWM outputs relative to the primary time base. Because the phase-shift values are added to the primary time base, the phase-shifted outputs occur earlier than a PWM channel that specifies zero phase shift. In Multi-Phase mode, the specified phase shift is fixed by the application's design.

FIGURE 12-6: MULTI-PHASE PWM

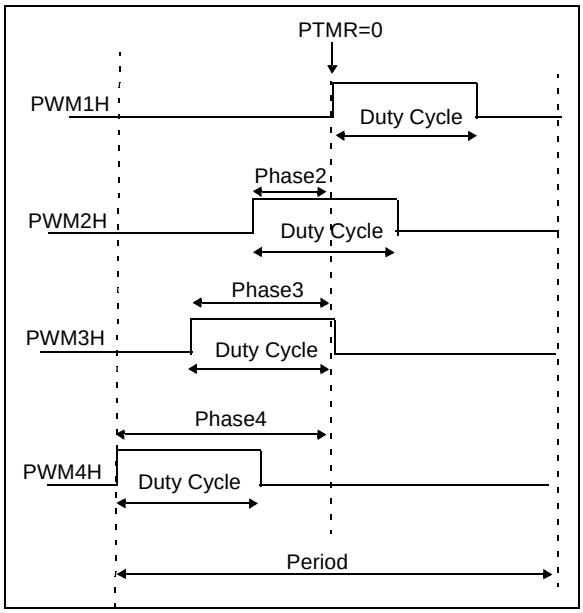

12.4.5 VARIABLE PHASE PWM MODE

Figure 12-7 shows the waveforms for Variable Phase-Shift PWM. Power-converter circuits constantly change the phase shift among PWM channels as a means to control the flow of power, in contrast to most PWM circuits that vary the duty cycle of PWM signals to control power flow. Often, in variable phase applications, the PWM duty cycle is maintained at 50%. The phase-shift value should be updated when the PWM signal is not asserted. Complementary outputs are available in Variable Phase-Shift mode.

FIGURE 12-7: VARIABLE PHASE PWM

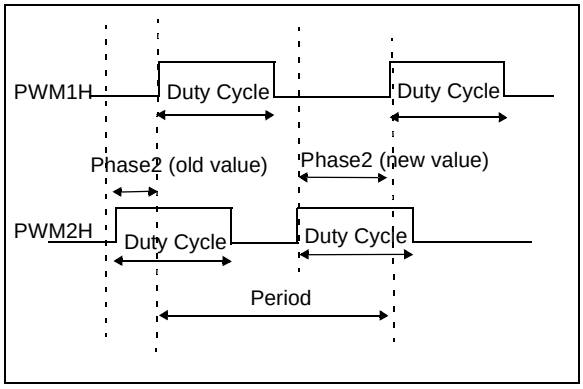

12.4.6 CURRENT-LIMIT PWM MODE

Figure 12-8 shows Cycle-by-Cycle Current-Limit mode. This mode truncates the asserted PWM signal when the selected external Fault signal is asserted. The PWM output values are specified by the Fault override bits (FLTDAT<1:0>) in the IOCONx register. The override output remains in effect until the beginning of the next PWM cycle. This mode is sometimes used in Power Factor Correction (PFC) circuits where the inductor current controls the PWM on time. This is a constant frequency PWM mode.

FIGURE 12-8: CYCLE-BY-CYCLE CURRENT-LIMIT PWM MODE

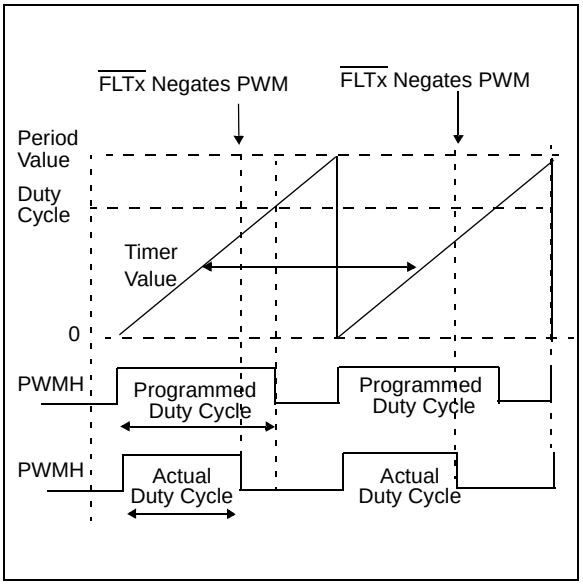

© 2006-2014 Microchip Technology Inc.

12.4.7 CONSTANT OFF-TIME PWM

Constant Off-Time mode is shown in Figure 12-9. Constant Off-Time PWM is a variable-frequency mode where the actual PWM period is less than or equal to the specified period value. The PWM time base is externally reset some time after the PWM signal duty cycle value has been reached, and the PWM signal has been deasserted. This mode is implemented by enabling the On-Time PWM mode (Current Reset mode) and using the complementary output.

FIGURE 12-9: CONSTANT OFF-TIME PWM

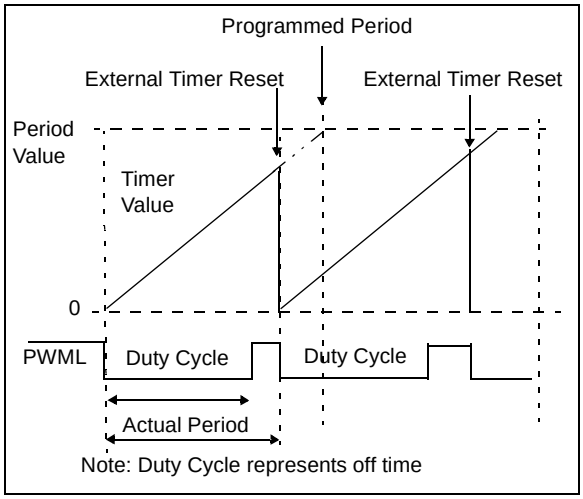

12.4.8 CURRENT RESET PWM MODE

Current Reset PWM is shown in Figure 12-10. Current Reset PWM uses a Variable-Frequency mode where the actual PWM period is less than or equal to the specified period value. The PWM time base is externally reset some time after the PWM signal duty cycle value has been reached and the PWM signal has been deasserted. Current Reset PWM is a constant on-time PWM mode.

FIGURE 12-10: CURRENT RESET PWM

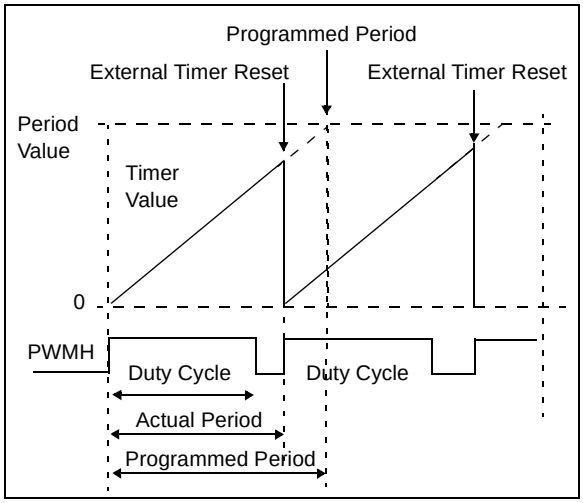

Typically, in the converter application, an energy storage inductor is charged with current while the PWM signal is asserted, and the inductor current is discharged by the load when the PWM signal is deasserted. In this application of current reset PWM, an external current measurement circuit determines when the inductor is discharged, and then generates a signal that the PWM module uses to reset the time base counter. In Current Reset mode, complementary outputs are available.

12.4.9 INDEPENDENT TIME BASE PWM

Independent Time Base PWM, as shown in Figure 12-11, is often used when the dsPIC DSC is controlling different power converter subcircuits such as the Power Factor Correction circuit, which may use 100 kHz PWM, and the full-bridge forward converter section may use 250 kHz PWM.

FIGURE 12-11: INDEPENDENT TIME BASE PWM

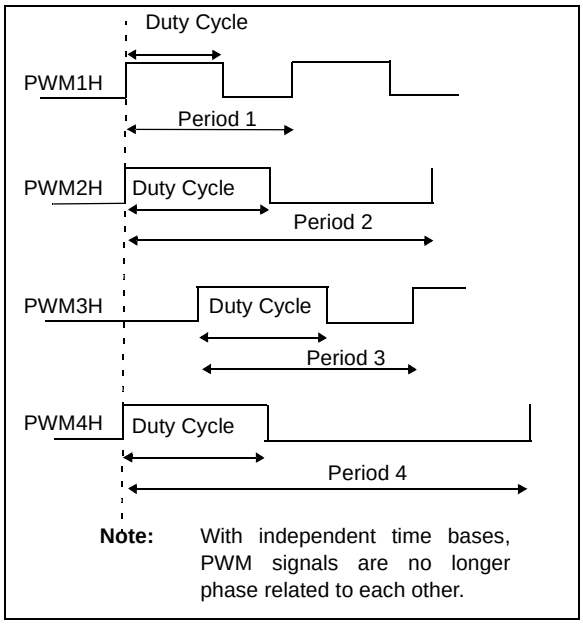

12.5 Primary PWM Time Base

There is a Primary Time Base (PTMR) counter for the entire PWM module, In addition, each PWM generator has an individual time base counter.

The PTMR determines when the individual time base counters are to update their duty cycle and phase-shift registers. The master time base is also responsible for generating the Special Event Triggers and timer-based interrupts. Figure 12-12 shows a block diagram of the primary time base logic.

FIGURE 12-12: PTMR BLOCK DIAGRAM

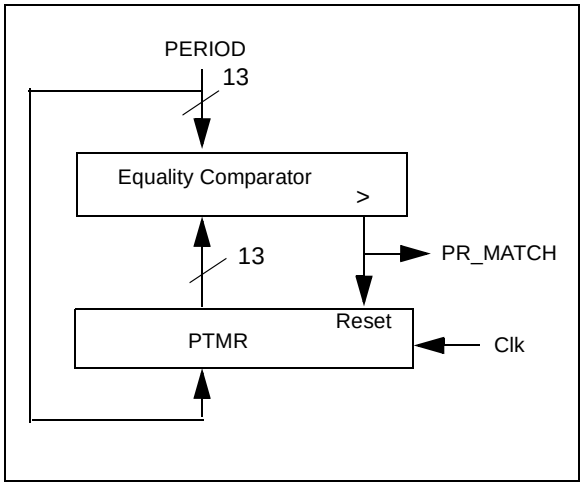

The primary time base may be reset by an external signal specified via the SYNCSRC<2:0> bits in the PTCON register. The external reset feature is enabled via the SYNCEN bit in the PTCON register. The primary time base reset feature supports synchronization of the primary time base with another SMPS dsPIC DSC device or other circuitry in the user's application. The primary time base logic also provides an output signal when a period match occurs that can be used to synchronize an external device such as another SMPS dsPIC DSC.

12.5.1 PTMR SYNCHRONIZATION

Because absolute synchronization is not possible, the user should program the time base period of the secondary (slave) device to be slightly larger than the primary device time base to ensure that the two time bases will reset at the same time.

12.6 Primary PWM Time Base Roll Counter

The primary time base has an additional 6-bit counter that counts the period matches of the primary time base. This ROLL counter enables the PWM generators to stagger their trigger events in time to the ADC module. This counter is not accessible for reading. Each PWM generator has six bits (TRGSTRT<5:0>) in the TRGCONx registers. These bits are used to specify the start enable for each TRIGx postscaler controlled by the TRGDIV<2:0> bits in the TRGCONx registers.

The TRGDIV bits specify how frequently a trigger pulse is generated, and the ROLL bits specify when the sequence begins. Once the TRIG postscaler is enabled, the ROLL bits and the TRGSTRT bits have no further effect until the PWM module is disabled and then reenabled.

The purpose of the ROLL counter and the TRGSTRT bits is to allow the user to spread the system work load over a series of PWM cycles.

An additional use of the ROLL counter is to allow the internal FRC oscillator to be varied on a PWM cycle basis to reduce peak EMI emissions generated by switching transistors in the power conversion application.

The ROLL counter is cleared when the PWM module is disabled (PTEN = 0), and the TRIGx postscalers are disabled, requiring a new ROLL versus TRGSTRT match to begin counting again.

12.7 Individual PWM Time Base(s)

Each PWM generator also has its own PWM time base. Figure 12-13 shows a block diagram for the individual time base circuits. With a time base per PWM generator, the PWM module can generate PWM outputs that are phase shifted relative to each other, or totally independent of each other. The individual PWM timers (TMRx) provide the time base values that are compared to the duty cycle registers to create the PWM signals. The user may initialize these individual time base counters before or during operation via the phase-shift registers. The primary (PTMR) and the individual timers (TMRx) are not user readable.

© 2006-2014 Microchip Technology Inc.

FIGURE 12-13: TMRx BLOCK DIAGRAM

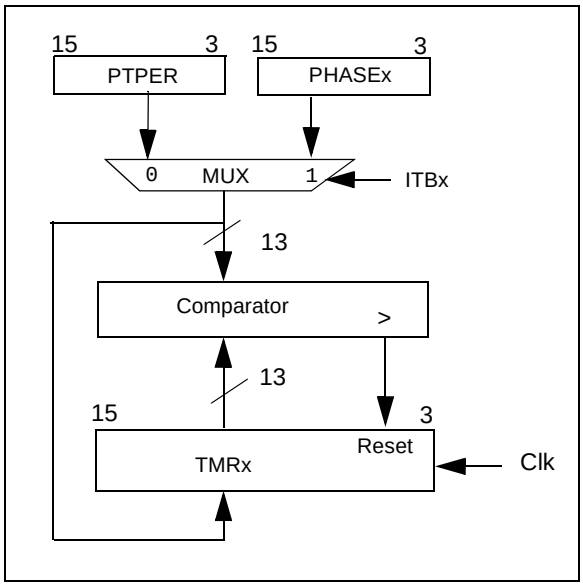

Normally, the Primary Time Base (PTMR) provides synchronization control to the individual timer/counters so they count in lock-step unison.

If the PWM phase-shift feature is used, then the PTMR provides the synchronization signal to each individual timer/counter that causes them to reinitialize with their individual phase-shift values.

If a PWM generator is operating in Independent Time Base mode, the individual timer/counters count upward until their count values match the value stored in their phase registers, then they reset and the cycle repeats.

The primary time base and the individual time bases are implemented as 13-bit counters. The timers/counters are clocked at 120 MHz @ 30 MIPS, which provides a frequency resolution of 8.4 nsec.

All of the timer/counters are enabled/disabled by setting/clearing the PTEN bit in the PTCON SFR. **The timers are cleared when the PTEN bit is cleared in software.**

The PTPER register sets the counting period for PTMR. The user must write a 13-bit value to PTPER<15:3>. When the value in PTMR<15:3> matches the value in PTPER<15:3>, the primary time base is reset to ‘0’, and the individual time base counters are reinitialized to their phase values (except if in Independent Time Base mode).

12.8 PWM Period

PTPER holds the 13-bit value that specifies the counting period for the primary PWM time base. The timer period can be updated at any time by the user. The PWM period can be determined from the following formula:

Period Duration = (PTPER + 1)/120 MHz @ 30 MIPS

12.9 PWM Frequency and Duty Cycle Resolution

The PWM Duty cycle resolution is 1.05 nsec per LSB @ 30 MIPS. The PWM period resolution is 8.4 nsec @ 30 MIPS. Table 12-1 shows the duty cycle resolution versus PWM frequencies for 30 MIPS execution speed.

TABLE 12-1: AVAILABLE PWM FREQUENCIES AND RESOLUTIONS @ 30 MIPS

MIPS	PWM Duty Cycle Resolution	PWM Frequency
30	16 bits	14.6 KHz
30	15 bits	29.3 KHz
30	14 bits	58.6 KHz
30	13 bits	117.2 KHz
30	12 bits	234.4 KHz
30	11 bits	468.9 KHz
30	10 bits	937.9 KHz
30	9 bits	1.87 MHz
30	8 bits	3.75 MHz

TABLE 12-2: AVAILABLE PWM FREQUENCIES AND RESOLUTIONS @ 20 MIPS

MIPS	PWM Duty Cycle Resolution	PWM Frequency
20	14 bits	39 KHz
20	12 bits	156 KHz
20	10 bits	624 KHz
20	8 bits	2.5 MHz

Notice the reduction in available resolution for a given PWM frequency is due to the reduced clock rate and the fact that the LSB of duty cycle resolution is derived from a fixed-delay element. At operating frequencies below 30 MIPS, the contribution of the fixed-delay element to the output resolution becomes less than 1 LSB.

For frequency resonant mode power conversion applications, it is desirable to know the available PWM frequency resolution. The available frequency resolution varies with the PWM frequency. The PWM time base clocks at 120 MHz @ 30 MIPS. The following equation provides the frequency resolution versus PWM period:

Frequency Resolution = 120 MHz/(Period)

where Period = PTPER<15:3>

12.10 PWM Duty Cycle Comparison Units

The PWM module has two to four PWM duty cycle generators. Three to five 16-bit special function registers are used to specify duty cycle values for the PWM module:

- MDC (Master Duty Cycle)
- PDC1, ..., PDC4 (Duty Cycle)

Each PWM generator has its own duty cycle register (PDCx), and there is a Master Duty Cycle (MDC) register. The MDC register can be used instead of individual duty cycle registers. The MDC register enables multiple PWM generators to share a common duty cycle register to reduce the CPU overhead required in updating multiple duty cycle registers. Multi-phase power converters are an application where the use of the MDC feature saves valuable processor time.

The value in each duty cycle register determines the amount of time that the PWM output is in the active state. The PWM time base counters are 13 bits wide and increment twice per instruction cycle. The PWM output is asserted when the timer/counter is less than or equal to the Most Significant 13 bits of the duty cycle register value. Each of the duty cycle registers allows a 16-bit duty cycle to be specified. The Least Significant 3 bits of the duty cycle registers are sent to additional logic for further adjustment of the PWM signal edge.

Figure 12-14 is a block diagram of a duty cycle comparison unit.

FIGURE 12-14: DUTY CYCLE COMPARISON

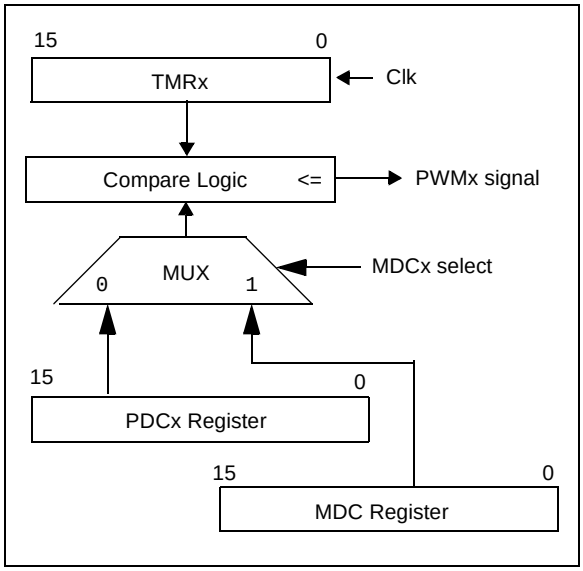

The duty cycle values can be updated at any time. The updated duty cycle values optionally can be held until the next rollover of the primary time base before becoming active.

12.11 Complementary PWM Outputs

Complementary PWM Output mode provides true and inverted PWM outputs on the pair of PWM output pins. The complement PWM signal is generated by inverting the active PWM signal. Complementary outputs are normally available with all of the different PWM modes except Push-Pull PWM and Independent PWM Output modes.

12.12 Independent PWM Outputs

Independent PWM Output mode simply replicates the active PWM output signal on both output pins associated with a PWM generator.

12.13 Duty Cycle Limits

The duty cycle generators are limited to the range of allowable values. A value of 0x0008 is the minimum duty cycle value that will produce an output pulse. This value represents 8.4 nsec at 30 MIPS. This minimum range limitation is not a problem in a real world application because of the slew-rate limitation of the PWM output buffers, external FET drivers, and the power transistors. The application control loop requires larger duty cycle values to achieve minimum transistor on times.

The maximum duty cycle value is also limited to 0xFFEF.

The user is responsible for limiting the duty cycle values to the allowable range of 0x0008 to 0xFFEF.

Note:	A duty cycle of 0x0000 will produce a zero PWM output, and a 0xFFFF duty cycle value will produce a high on the PWM output.

© 2006-2014 Microchip Technology Inc.

12.14 Dead-Time Generation

Dead time refers to a programmable period of time, specified by the Dead-Time Register (DTR) or the ALT-DTR register, which prevent a PWM output from being asserted until its complementary PWM signal has been deasserted for the specified time. Figure 12-15 shows the insertion of dead time in a complementary pair of PWM outputs. Figure 12-16 shows the four dead-time units that each have their own dead-time value.

Dead-time generation can be provided when any of the PWM I/O pin pairs are operating in any output mode.

Many power-converter circuits require dead time because the power transistors cannot switch instantaneously. To prevent current “shoot-through” some amount of time must be provided between the turn-off event of one PWM output in a complementary pair and the turn-on event of the other transistor.

The PWM module can also provide negative dead time. Negative dead time is the forced overlap of the PWMH and PWML signals. There are certain converter techniques that require a limited amount of current “shoot-through”.

The dead-time feature can be disabled for each PWM generator. The dead-time functionality is controlled by the DTC<1:0> bits in the PWMCON register.

Note:	If zero dead time is required, the dead time feature must be explicitly disabled in the DTC<1:0> bit in the PWMCON register

FIGURE 12-15: DEAD-TIME INSERTION FOR COMPLEMENTARY PWM

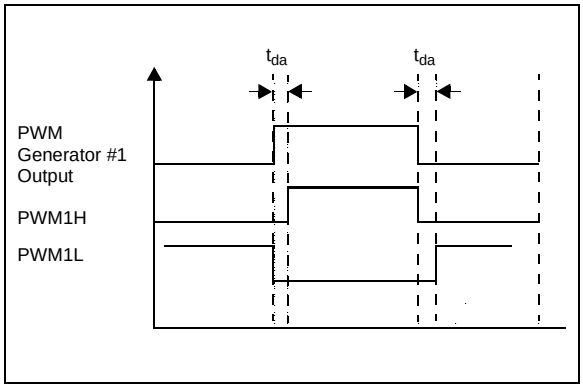

FIGURE 12-16: DEAD-TIME CONTROL UNITS BLOCK DIAGRAM

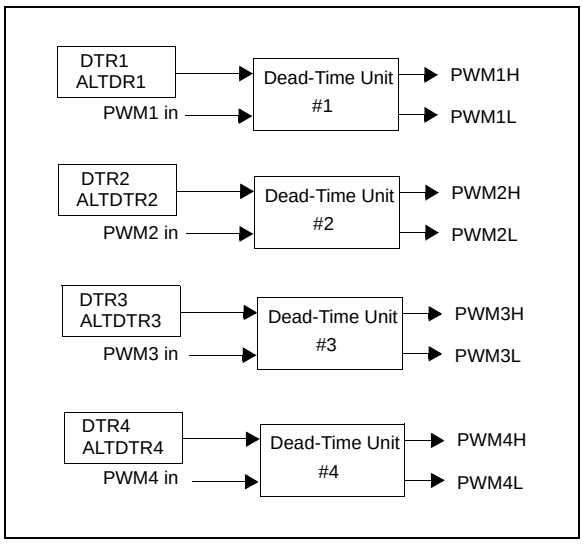

12.14.1 DEAD-TIME GENERATORS

Each complementary output pair for the PWM module has 12-bit down counters to produce the dead-time insertion. Each dead-time unit has a rising and falling edge detector connected to the duty cycle comparison output.

Depending on whether the edge is rising or falling, one of the transitions on the complementary outputs is delayed until the associated timer counts down to zero. A timing diagram indicating the dead-time insertion for one pair of PWM outputs is shown in Figure 12-15.

12.14.2 ALTERNATE DEAD-TIME SOURCE

The alternate dead time refers to the dead time specified by the ALTDTR register that is applied to the complementary PWM output. Figure 12-17 shows a dual dead-time insertion using the ALTDTR register.

FIGURE 12-17: DUAL DEAD-TIME WAVEFORMS

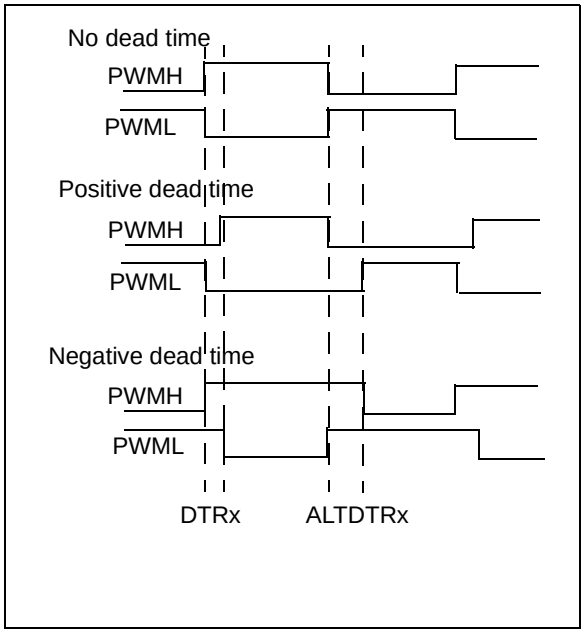

12.14.3 DEAD-TIME RANGES

The amount of dead time provided by each dead-time unit is selected by specifying a 12-bit unsigned value in the DTRx registers. The 12-bit dead-time counters clock at four times the instruction execution rate. The Least Significant one bit of the dead-time value are processed by the Fine Adjust PWM module.

Table 12-3 shows example dead-time ranges as a function of the device operating frequency.

TABLE 12-3: EXAMPLE DEAD-TIME RANGES

MIPS	Resolution	Dead-Time Range
30	4.16 ns	0-17.03 µsec
20	6.25 ns	0-25.59 µsec

12.14.4 DEAD-TIME INSERTION TIMING

Figure 12-18 shows how the dead-time insertion for complementary signals is accomplished.

12.14.5 DEAD-TIME DISTORTION

For small PWM duty cycles, the ratio of dead time to the active PWM time may become large. In this case, the inserted dead time introduces distortion into waveforms produced by the PWM module. The user can ensure that dead-time distortion is minimized by keeping the PWM duty cycle at least three times larger than the dead time.

A similar effect occurs for duty cycles at or near 100%. The maximum duty cycle used in the application should be chosen such that the minimum inactive time of the signal is at least three times larger than the dead time.

FIGURE 12-18: DEAD-TIME INSERTION (PWM OUTPUT SIGNAL TIMING MAY BE DELAYED)

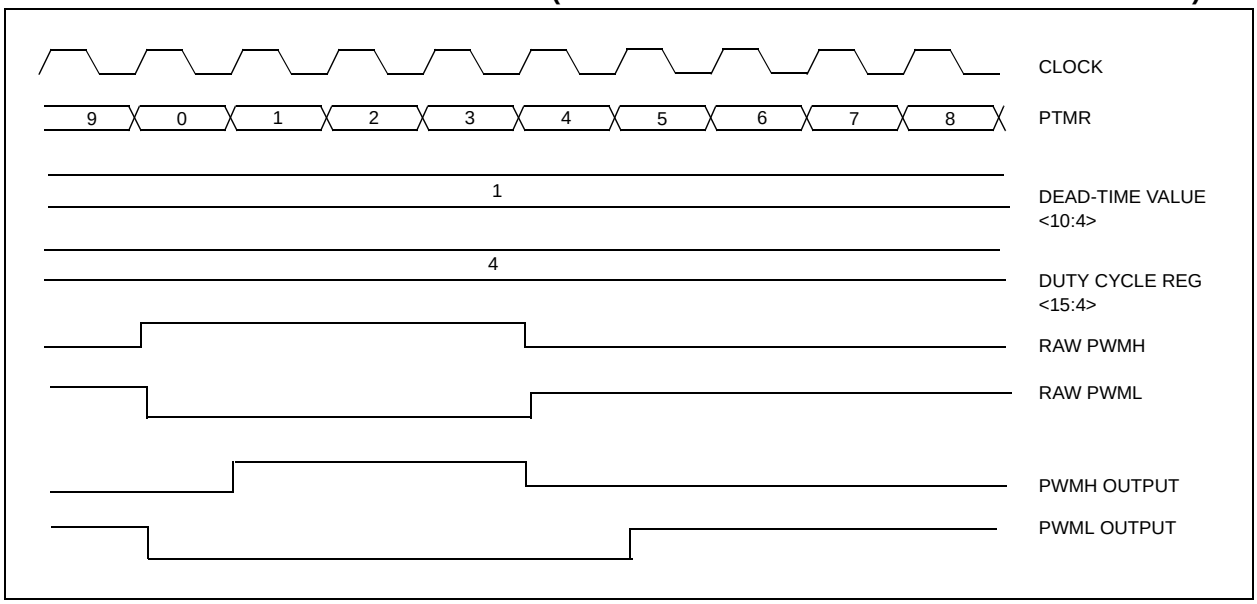

© 2006-2014 Microchip Technology Inc.

12.15 Configuring a PWM Channel

Example 12-1 is a code example for configuring PWM channel 1 to operate in complementary mode at 400 kHz, with a dead-time value of approximately 64 nsec. It is assumed that the dsPIC30F1010/202X is operating on the internal fast RC oscillator with PLL in the high-frequency range (14.55 MHz input to the PLL, assuming industrial temperature rated part).

12.16 Speed Limits of PWM Output Circuitry

The PWM output I/O buffers, and any attached circuits such as FET drivers and power FETs, have limited slew-rate capability. For very small PWM duty cycles, the PWM output signal is low-pass filtered; no pulse makes it through all of the circuitry.

A similar effect happens for duty cycle values near 100%. Before 100% duty cycle is reached, the output PWM signal appears to saturate at 100%.

Users need to take such behavior into account in their applications. In normal power conversion applications, duty cycle values near 0% or 100% are avoided because to reach these values is to operate in a Discontinuous mode or a Saturated mode where the control loop may be non functional.

12.17 PWM Special Event Trigger

The PWM module has a Special Event Trigger that allows A/D conversions to be synchronized to the PWM time base. The A/D sampling and conversion time can be programmed to occur at any point within the PWM period. The Special Event Trigger allows the user to minimize the delay between the time when A/D conversion results are acquired and the time when the duty cycle value is updated.

The Special Event Trigger is based on the primary PWM time base.

The PWM Special Event Trigger has one register (SEVTCMP) and four additional control bits (SEVTPS<3:0> in PTCON) to control its operation. The PTMR value that causes a Special Event Trigger is loaded into the SEVTCMP register.

12.17.1 SPECIAL EVENT TRIGGER ENABLE

The PWM module always produces Special Event Trigger pulses. This signal can optionally be used by the ADC module.

12.17.2 SPECIAL EVENT TRIGGER POSTSCALER

The PWM Special Event Trigger has a postscaler that allows a 1:1 to 1:16 postscale ratio. The postscaler is configured by writing the SEVTPS<3:0> control bits in the PTCON register.

The special event output postscaler is cleared on the following events:

- Any write to the SEVTCMP register.
- Any device reset.

12.18 Individual PWM Triggers

The PWM module also features an additional ADC trigger output for each PWM generator. This feature is very useful when the PWM generators are operating in Independent Time Base mode.

A block diagram of a trigger circuit is shown in Figure 12-19. The user specifies a match value in the TRIGx register. When the local time base counter value matches the TRIGx value, an ADC trigger signal is generated.

Trigger signals are always generated regardless of the TRIGx value as long as the TRIGx value is less than or equal to the PWM period value for the local time base. If the TRGIEN bit is set in the PWMCONx register, then an interrupt request is generated.

The individual trigger outputs can be divided per the TRGDIV<2:0> bits in the TRGCONx registers, which allows the trigger signals to the ADC to be generated once for every 1, 2, 3 ..., 7 trigger events.

The trigger divider allows the user to tailor the ADC sample rates to the requirements of the control loop.

EXAMPLE 12-1: CODE EXAMPLE FOR CONFIGURING PWM CHANNEL 1

Note: This code example does not illustrate configuration of various fault modes for the PWM module. It is intended as a quick start guide for setting up the PWM Module.

```
mov #0x0400, w0              ; PWM Module is disabled, continue operation in
mov w0, PTCON                ; idle mode, special event interrupt disabled,
                             ; immediate period updates enabled, no external
                             ; synchronization

; Set the PWM Period
mov #0x094D, w0              ; Select period to be approximately 2.5usec
mov w0, PTPER                ; PLL Frequency is ~480MHz. This equates to a
                             ; clocke period of 2.1nsec. The PWM period and
                             ; duty cycle registers are triggered on both +ve
                             ; and -ve edges of the PLL clock. Therefore,
                             ; one count of the PTPER and PDCx registers
                             ; equals 1.05nsec.
                             ; So, to achieve a PWM period of 2.5usec, we
                             ; choose PTPER = 0x094D

mov #0x0000, w0              ; no phase shift for this PWM Channel
mov w0, PHASE1               ; This register is used for generating variable
                             ; phase PWM



; Select individual Duty Cycle Control
mov #0x0001, w0              ; Fault interrupt disabled, Current Limit
mov w0, PWMCON1              ; interrupt disabled, trigger interrupt,
                             ; disabled, Primary time base provides timing,
                             ; DC1 provides duty cycle information, positive
                             ; dead time applied, no external PWM reset,
                             ; Enable immediate duty cycle updates

; Code for PWM Current Limit and Fault Inputs
mov #0x0003, w0
mov w0, FCLCON1              ; Disable current limit and fault inputs


; Code for PWM Output Control
mov #0xC000, w0              ; PWM1H and PWM1L is controlled by PWM module
mov w0, IOCON1               ; Output polarities are active high, override
                             ; disabled

; Duty Cycle Setting
mov #0x04A6, w0              ; To achieve a duty cycle of 50%, we choose
mov w0, PDC1                 ; the PDC1 value = 0.5*(PWM Period)
                             ; The ON time for the PWM = 1.25usec
                             ; The Duty Cycle Register will provide
                             ; positive duty cycle to the PWMxH outputs
                             ; when output polarities are active high
                             ; (see IOCON1 register)

; Dead Time Setting
mov #0x0040, w0              ; Dead time ~ 67nsec
mov w0, DTR1                 ; Hex(40) = decimal(64)
                             ; So, Dead time = 64*1.05nsec = 67.2nsec
                             ; Note that the last 2 bits are unimplemented,
                             ; therefore the dead time register can achieve a
                             ; a resolution of about 4nsec.
mov w0, ALTDTR1              ; Load the same value in ALTDTR1 register

bset PTCON, #15              ; turn ON PWM module
```


© 2006-2014 Microchip Technology Inc.

FIGURE 12-19: PWM TRIGGER BLOCK DIAGRAM

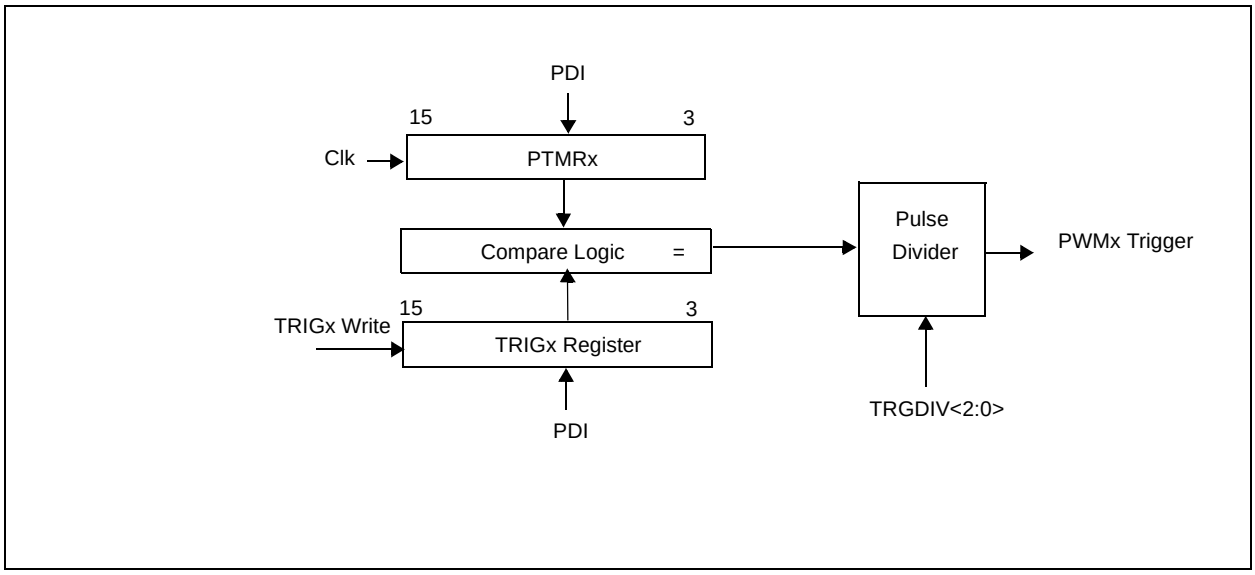

12.19 PWM Interrupts

The PWM module can generate interrupts based on internal timing or based on external signals via the current-limit and Fault inputs. The primary time base module can generate an interrupt request when a special event occurs. Each PWM generator module has its own interrupt request signal to the interrupt controller. The interrupt for each PWM generator is an OR of the trigger event interrupt request, the current-limit input event or the Fault input event for that module.

There are four interrupt request signals to the interrupt control plus another interrupt request from the primary time base on special events.

12.20 PWM Time Base Interrupts

The PWM module can generate interrupts based on the primary time base and/or the individual time bases in each PWM generator. The interrupt timing is specified by the Special Event Comparison Register (SEVTCMP) for the primary time base, and by the TRIGx registers for the individual time bases in the PWM generator modules.

The primary time base special event interrupt is enabled via the SEIEN bit in the PTCON register. The individual time base interrupts generated by the trigger logic in each PWM generator are controlled by the TRGIEN bit in the PWMCONx registers.

12.21 PWM Fault and Current-Limit Pins

The PWM module supports multiple Fault pins for each PWM generator. These pins are labeled SFLTx (Shared Fault) or IFLTx (Individual Fault). The Shared Fault pins can be seen and used by any of the PWM generators. The Individual Fault pins are usable by specific PWM generators.

Each PWM generator can have one pin for use as a cycle-by-cycle current limit, and another pin for use as either a cycle-by-cycle current limit or a latching current Fault disable function.

12.22 Leading Edge Blanking

Each PWM generator supports “Leading Edge Blanking” of the current-limit and Fault inputs via the LEB<9:3> bits and the PHR, PHF, PLR, PLF, FLTLEBEN and CLLEBEN bits in the LEBCONx registers. The purpose of leading edge blanking is to mask the transients that occur on the application printed circuit board when the power transistors are turned on and off.

The LEB bits support the blanking (ignoring) of the current-limit and Fault inputs for a period of 0 to 1024 nsec in 8.4 nsec increments following any specified rising or falling edge of the coarse PWMH and PWML signals. The coarse PWM signal (signal prior to the PWM fine tuning) has resolution of 8.4 nsec (at 30 MIPS), which is the same time resolution as the LEB counters.

The PHR, PHF, PLR and PLF bits select which edge of the PWMH and PLWL signals will start the blanking timer. If a new selected edge triggers the LEB timer while the timer is still active from a previously selected PWM edge, the timer reinitializes and continues counting.

The FLTLEBEN and CLLEBEN bits enable the application of the blanking period to the selected Fault and current-limit inputs.

The LEB duration @ 30 MIPS = (LEB<9:3> + 1)/120 MHz.

There is a blanking period offset of 8.4 nsec. Therefore a LEB<9:3> value of zero yields an effective blanking period of 8.4 ns.

If a current-limit or Fault inputs are active at the end of the previous PWM cycle, and they are still active at the start of the new PWM cycle and the dead time is non-zero, the Fault or current limit will be detected regardless of the LEB counter configuration.

12.23 PWM Fault Pins

Each PWM generator can select its own Fault input source from a selection of up to 12 Fault/current-limit pins. In the FCLCONx registers, each PWM generator has control bits that specify the source for its Fault input signal. These are the FLTSRC<3:0> bits. Additionally, each PWM generator has a FLTIEN bit in the PWMCONx register that enables the generation of Fault interrupt requests. Each PWM generator has an associated Fault Polarity bit (FLTPOL) in the FCLCONx register that selects the active level of the selected Fault input.

The Fault pins actually serve two different purposes. First is generation of Fault overrides for the PWM outputs. The action of overriding the PWM outputs and generating an interrupt is performed asynchronously in hardware so that Fault events can be managed quickly. Second, the Fault pin inputs can be used to implement either Current-Limit PWM mode or Current Force mode.

PWM Fault condition states are available on the FLTSTAT bit in the PWMCONx registers. The FLTSTAT bits displays the Fault IRQ latch if the FIE bit is set. If Fault interrupts are not enabled, then the FSTATx bits display the status of the selected FLTx input in positive logic format. When the Fault input pins are not used in association with a PWM generator, these pins become general purpose I/O or interrupt input pins.

The FLTx pins are normally active high. The FLTPOL bit in FCLCONx registers, if set to one, invert the selected Fault input signal so that it is an active low.

The Fault pins are also readable through the PORT I/O logic when the PWM module is enabled. This allows the user to poll the state of the Fault pins in software. Figure 12-20 is a diagram of the PWM Fault control logic.

FIGURE 12-20: PWM FAULT CONTROL LOGIC DIAGRAM

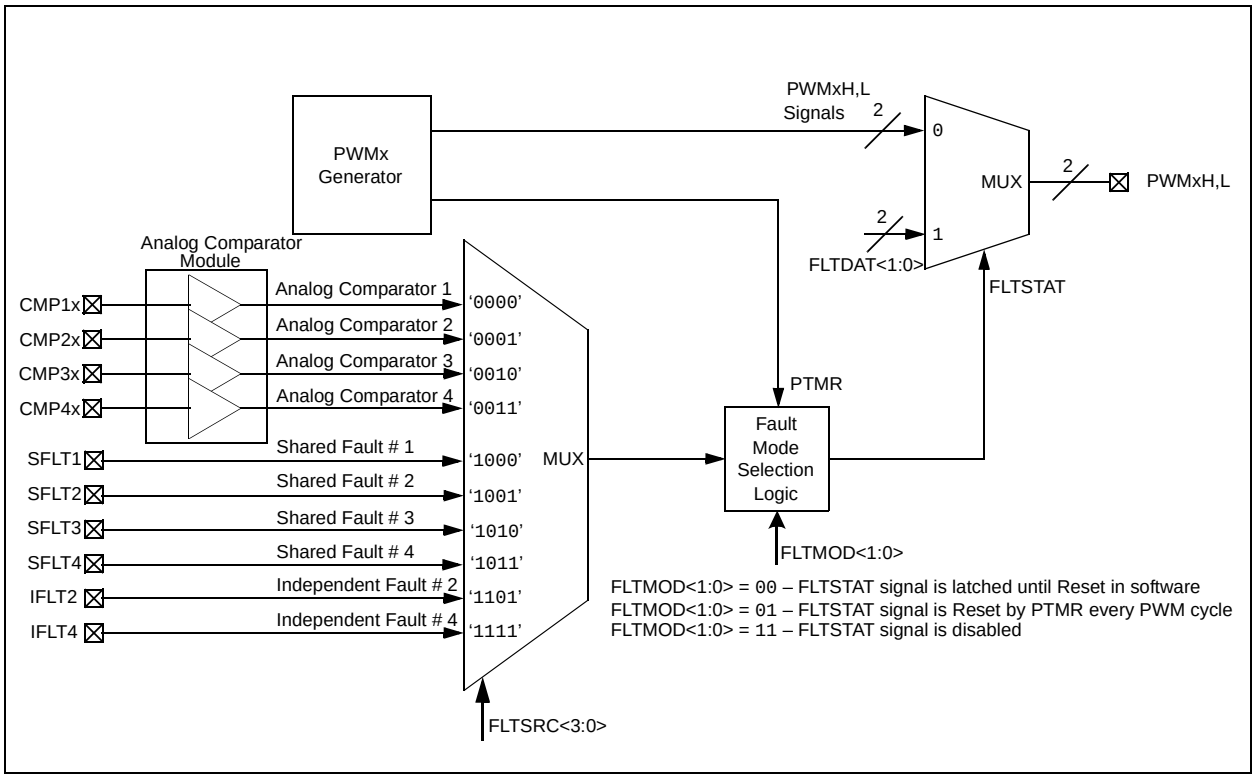

© 2006-2014 Microchip Technology Inc.

12.23.1 FAULT INTERRUPTS

The FLTIENx bits in the PWMCONx registers determine if an interrupt will be generated when the FLTx input is asserted high. The FLTMOD bits in the FCLCONx register determines how the PWM generator and its outputs respond to the selected Fault input pin. The FLTDAT<1:0> bits in the IOCONx registers supply the data values to be assigned to the PWMxH,L pins in the advent of a Fault.

The Fault pin logic can operate separately from the PWM logic as an external interrupt pin. If the faults are disabled from affecting the PWM generators in the FCLCONx register, then the Fault pin can be used as a general purpose interrupt pin.

12.23.2 FAULT STATES

The IOCONx register has two bits that determine the state of each PWMx I/O pin when they are overridden by a Fault input. When these bits are cleared, the PWM I/O pin is driven to the inactive state. If the bit is set, the PWM I/O pin is driven to the active state. The active and inactive states are referenced to the polarity defined for each PWM I/O pin (HPOL and LPOL polarity control bits).

12.23.3 FAULT INPUT MODES

The Fault input pin has two modes of operation:

- **Latched Mode:** When the Fault pin is asserted, the PWM outputs go to the states defined in the FLTDAT bits in the IOCONx registers. The PWM outputs remain in this state until the Fault pin is deasserted AND the corresponding interrupt flag has been cleared in software. When both of these actions have occurred, the PWM outputs return to normal operation at the beginning of the next PWM cycle boundary. If the FLTSTAT bit is cleared before the Fault condition ends, the PWM module waits until the Fault pin is no longer asserted to restore the outputs. Software can clear the FLTSTAT bit by writing a zero to the FLTIEN bit.
- **Cycle-by-Cycle Mode:** When the Fault input pin is asserted, the PWM outputs remain in the deasserted PWM state for as long as the Fault pin is asserted. For Complementary Output modes, PWMH is low (deasserted) and PWML is high (asserted). After the Fault pin is driven high, the PWM outputs return to normal operation at the beginning of the following PWM cycle.

The operating mode for each Fault input pin is selected using the FLTMOD<1:0> control bits in the FCLCONx register.

12.23.4 FAULT ENTRY

The response of the PWM pins to the Fault input pins is always asynchronous with respect to the device clock signals. That is, the PWM outputs should immediately go to the states defined in the FLTDAT register bits without any interaction from the dsPIC DSC device or software.

Refer to **Section 12.28 “Fault and Current-Limit Override Issues with Dead-Time Logic”** for information regarding data sensitivity and behavior in response to current-limit or Fault events.

12.23.5 FAULT EXIT

The restoration of the PWM signals after a Fault condition has ended must occur at a PWM cycle boundary to ensure proper synchronization of PWM signal edges and manual signal overrides. The next PWM cycle begins when the PTMRx value is zero.

12.23.6 FAULT EXIT WITH PTMR DISABLED

There is a special case for exiting a Fault condition when the PWM time base is disabled (PTEN = 0). When a Fault input is programmed for Cycle-by-Cycle mode, the PWM outputs are immediately restored to normal operation when the Fault input pin is deasserted. The PWM outputs should return to their default programmed values. (The time base is disabled, so there is no reason to wait for the beginning of the next PWM cycle.)

When a Fault input is programmed for Latched mode, the PWM outputs are restored immediately when the Fault input pin is deasserted AND the FSTAT bit has been cleared in software.

12.23.7 FAULT PIN SOFTWARE CONTROL

The Fault pin can be controlled manually in software. Since the Fault input is shared with a PORT I/O pin, the PORT pin can be configured as an output by clearing the corresponding TRIS bit. When the PORT bit for the pin is cleared, the Fault input will be activated.

Note:	The user should use caution when controlling the Fault inputs in software. If the TRIS bit for the Fault pin is cleared and the PORT bit is set high, then the Fault input cannot be driven externally.

12.24 PWM Current-Limit Pins

Each PWM generator can select its own current-limit input source from up to12 current-limit/Fault pins. In the FCLCONx registers, each PWM generator has control bits (CLSRC<3:0>) that specify the source for its current-limit input signal. Additionally, each PWM generator has a CLIEN bit in the PWMCONx register that enables the generation of current-limit interrupt requests. Each PWM generator has an associated Fault polarity bit CLPOL in the FCLCONx register. Figure 12-21 is a diagram of the PWM Current-Limit control logic.

The current-limit pins actually serve two different purposes. They can be used to implement either Current-Limit PWM mode or Current Reset PWM mode.

1. When the CLIEN bit is set in the PWMCONx registers, the PWMxH,L outputs are forced to the values specified by the CLDAT<1:0> bits in the IOCONx register, if the selected current-limit input signal is asserted.
2. When the CLMOD bit is zero AND the XPRES bit in the PWMCONx register is ‘01’ AND the PWM generator is in Independent Time Base mode (`ITB = 1`), then a current-limit signal resets the time base for the affected PWM generator. This behavior is called Current Reset mode, which is used in some Power Factor Correction (PFC) applications.

12.24.1 CURRENT-LIMIT INTERRUPTS

The state of the PWM current-limit conditions is available on the CLSTAT bits in the PWMCONx registers. The CLSTAT bits display the current-limit IRQ flag if the CLIEN bit is set. If current-limit interrupts are not enabled, then the CLSTAT bits display the status of the selected current-limit inputs in positive logic format. When the current-limit input pin associated with a PWM generator is not used, these pins become general purpose I/O or interrupt input pins.

The current-limit pins are normally active high. If set to ‘1’, the CLPOL bit in FCLCONx registers inverts the selected current-limit input signal to active high.

The interrupts generated by the selected current-limit signals are combined to create a single interrupt request signal to the interrupt controller, which has its own interrupt vector, interrupt flag bit, interrupt enable bit and interrupt priority bits associated with it.

The Fault pins are also readable through the PORT I/O logic when the PWM module is enabled. This allows the user to poll the state of the Fault pins in software.

FIGURE 12-21: PWM CURRENT-LIMIT CONTROL LOGIC DIAGRAM

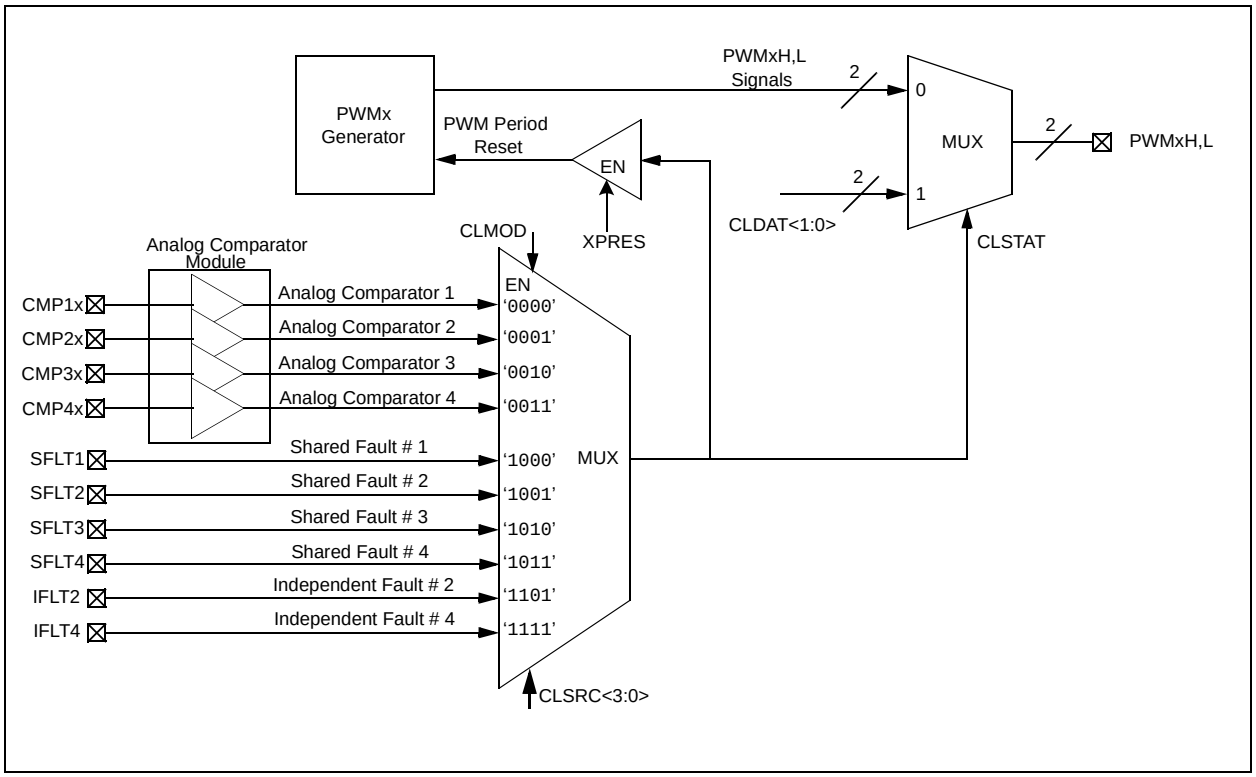

© 2006-2014 Microchip Technology Inc.

12.25 Simultaneous PWM Faults and Current Limits

The current-limit override function, if enabled and active, forces the PWMxH,L pins to the values specified by the CLDAT<1:0> bits in the IOCONx registers UNLESS the Fault function is enabled and active. If the selected Fault input is active, the PWMxH,L outputs assume the values specified by the FLTDAT<1:0> bits in the IOCONx registers.

12.26 PWM Fault and Current-Limit TRG Outputs To ADC

The Fault and current-limit source selection fields in the FCLCONx registers (FLTSRC<3:0> and CLSRC<3:0>) control multiplexers in each PWM generator module. The control multiplexers select the desired Fault and current-limit signals for their respective modules. The selected Fault and current-limit signals are also available to the ADC module as trigger signals that initiate ADC sampling and conversion operations.

12.27 PWM Output Override Priority

If the PWM module is enabled, the priority of PWMx pin ownership is:

1. PWM Generator (lowest priority)
2. Output Override
3. Current-Limit Override
4. Fault Override
5. PENx (GPIO/PWM) ownership (highest priority)

If the PWM module is disabled, the GPIO module controls the PWMx pins.

12.28 Fault and Current-Limit Override Issues with Dead-Time Logic

The PWMxH and PWMxL outputs are immediately driven low (deasserted) as specified by the CLDAT<1:0> and the FLTDAT<1:0> bits when a current-limit or a Fault event occurs.

The override data is gated with the PWM signals going into the dead-time logic block, and at the output of the PWM module, just ahead of the PWM pin output buffers.

Many applications require fast response to current shutdown for accurate current control and/or to limit circuitry damage to Fault currents.

Some applications will set the complementary PWM outputs high in synchronous rectifier designs when a Fault or current-limit event occurs. If the CLDAT or FLTDAT bits are set to ‘1’, and their associated event occurs, then these asserted outputs will be delayed by clocked logic in the dead-time circuitry.

12.29 Asserting Outputs via Current Limit

It is possible to use the CLDAT bits to assert the PWMxH,L outputs in response to a current-limit event. Such behavior could be used as a current “force” feature in response to an external current or voltage measurement that indicates a sudden sharp increase in the load on the power-converter output. Forcing the PWM “ON” could be viewed as a “Feed-Forward” term that allows quick system response to unexpected load increases without waiting for the digital control loop to respond.

12.30 PWM Immediate Update

For high-performance PWM control-loop applications, the user may want to force the duty cycle updates to occur immediately. Setting the IUE bit in the PWMCONx register enables this feature.

In a closed-loop control application, any delay between the sensing of a system’s state and the subsequent outputting of PWM control signals that drive the application reduces the loop stability. Setting the IUE bit minimizes the delay between writing the duty cycle registers and the response of the PWM generators to that change.

12.31 PWM Output Override

All control bits associated with the PWM output override function are contained in the IOCONx register.

If the PENH, PENL bits are set, the PWM module controls the PWMx output pins.

The PWM output override bits allow the user to manually drive the PWM I/O pins to specified logic states independent of the duty cycle comparison units.

The OVRDAT<1:0> bits in the IOCONx register determine the state of the PWM I/O pins when a particular output is overridden via the OVRENH,L bits.

The OVRENH, OVRENL bits are active high control bits. When the OVREN bits are set, the corresponding OVRDAT bit overrides the PWM output from the PWM generator.

12.31.1 COMPLEMENTARY OUTPUT MODE

When the PWM is in Complementary Output mode, the dead-time generator is still active with overrides. The output overrides and Fault overrides generate control signals used by the dead-time unit to set the outputs as requested, including dead time.

Dead-time insertion can be performed when PWM channels are overridden manually.

12.31.2 OVERRIDE SYNCHRONIZATION

If the OSYNC bit in the IOCONx register is set, the output overrides performed via the OVRENH,L and the OVDDAT<1:0> bits are synchronized to the PWM time base. Synchronous output overrides occur when the time base is zero.

If PTEN = 0, meaning the timer is not running, writes to IOCON take effect on the next TCY boundary.

12.32 Functional Exceptions

12.32.1 POWER RESET CONDITIONS

All registers associated with the PWM module are reset to the states given in Table 12-4 upon a Power-on Reset. On a device reset, the PWM output pins are tri-stated.

12.32.2 SLEEP MODE

The selected Fault input pin has the ability to wake the CPU from Sleep mode. The PWM module should generate an asynchronous interrupt if any of the selected Fault pins is driven low while in Sleep.

It is recommended that the user disable the PWM outputs prior to entering Sleep mode. If the PWM module is controlling a power conversion application, the action of putting the device into Sleep will cause any control loops to be disabled, and most applications will likely experience issues unless they are explicitly designed to operate in an Open-Loop mode.

12.32.3 CPU IDLE MODE

The dsPIC30F202X module has a PTSIDL control bit in the PTCON register. This bit determines if the PWM module continues to operate or stops when the device enters Idle mode. Stopped Idle mode functions like Sleep mode, and Fault pins are asynchronously active.

- PTSIDL = 1 (Stop module when in Idle mode)
- PTSIDL = 0 (Don't stop module when in Idle mode)

It is recommended that the user disable the PWM outputs prior to entering Idle mode. If the PWM module is controlling a power-conversion application, the action of putting the device into Idle will cause any control loops to be disabled, and most applications will likely experience issues unless they are explicitly designed to operate in an Open-Loop mode.

12.33 Register Bit Alignment

Table 12-4 on page 142 shows the registers for the PS PWM module. All time-based data for the module is always bit-aligned with respect to time. For example: bit 3 in the period register, the duty cycle registers, the dead-time registers, the trigger registers and the phase registers always represents a value of 8.4 nsec, assuming 30 MIPS operation. Unused portions of registers always read as zeros.

The use of data alignment makes it easier to write software because it eliminates the need to shift time values to fit into registers. It also eases the computation and understanding of time allotment within a PWM cycle.

© 2006-2014 Microchip Technology Inc.

12.34 APPLICATION EXAMPLES:

12.34.1 STANDARD PWM MODE

In standard PWM mode, the PWM output is typically connected to a single transistor, which charges an inductor, as shown in Figure 12-22. Buck and Boost converters typically use standard PWM mode.

FIGURE 12-22: APPLICATIONS OF STANDARD PWM MODE

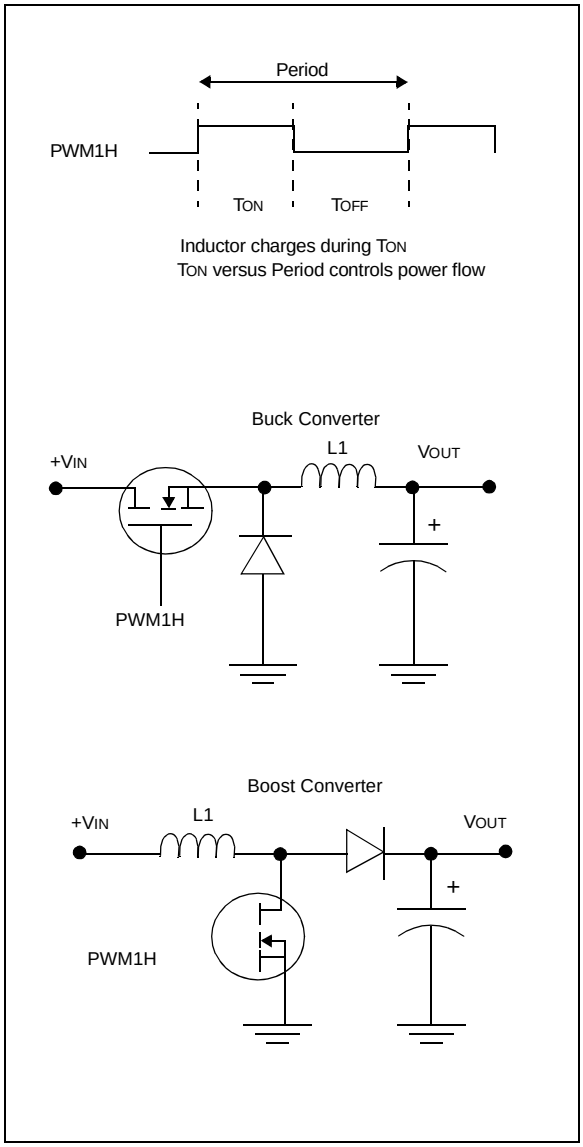

12.34.2 APPLICATION OF COMPLEMENTARY PWM MODE

Complementary mode PWM is often used in circuits that use two transistors in a bridge configuration where transformers are not used, as shown in Figure 12-23. If transformers are used, then some means must be provided to ensure that no net DC currents flow through the transformer to prevent core saturation.

FIGURE 12-23: APPLICATIONS OF COMPLEMENTARY PWM MODE

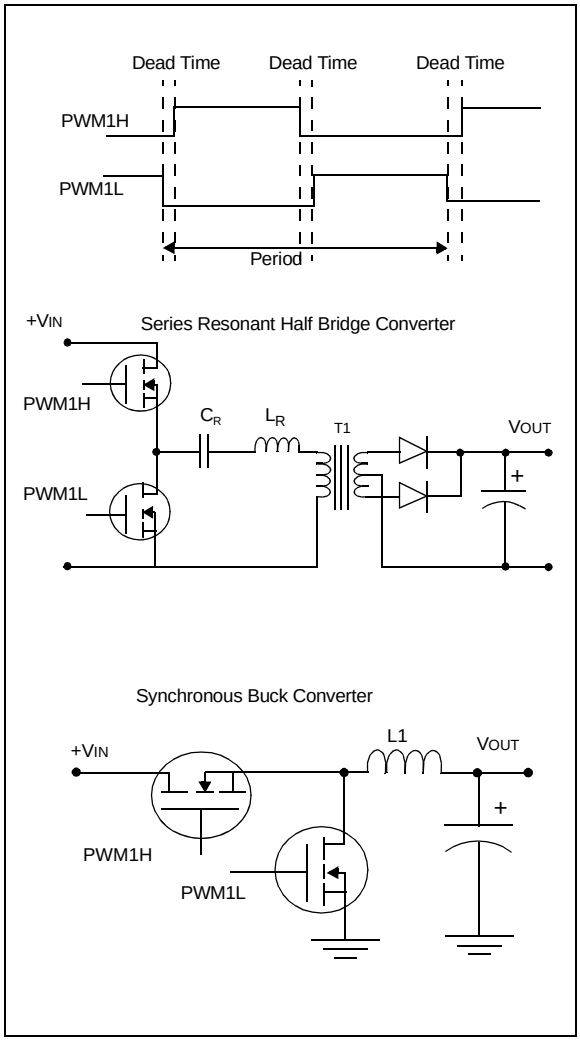

12.34.3 APPLICATION OF PUSH-PULL PWM MODE

Push-Pull PWM mode is typically used in transformer coupled circuits to ensure that no net DC currents flow through the transformer. Push-Pull mode ensures that the same duty cycle PWM pulse is applied to the transformer windings in alternate directions, as shown in Figure 12-24.

FIGURE 12-24: APPLICATIONS OF PUSH-PULL PWM MODE

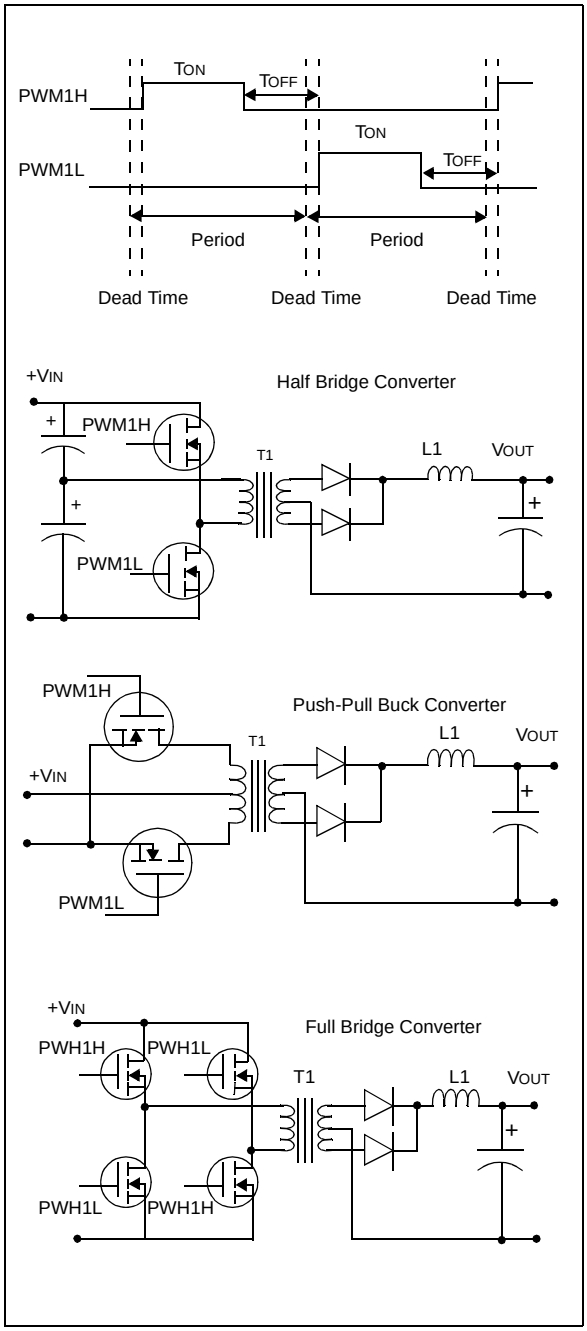

12.34.4 APPLICATION OF MULTI-PHASE PWM MODE

Multi-Phase PWM mode is often used in DC/DC converters that must handle very fast load current transients and fit into tight spaces. A multi-phase converter is essentially a parallel array of buck converters that are operated slightly out of phase of each other, as shown in Figure 12-25. The multiple phases create an effective switching speed equal to the sum of the individual converters. If a single phase is operating with a 333 KHz PWM frequency, then the effective switching frequency for the circuit is 1 MHz. This high switching frequency greatly reduces output capacitor size requirements and improves load transient response.

FIGURE 12-25: APPLICATIONS OF MULTI-PHASE PWM MODE

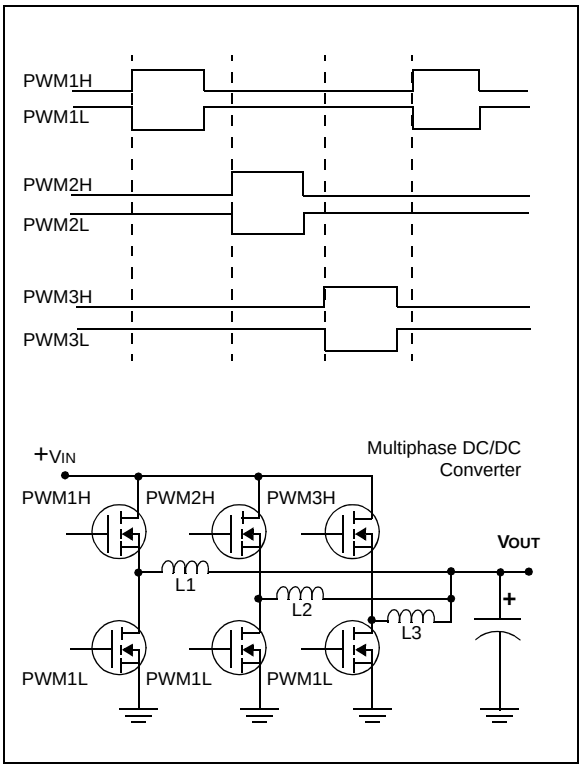

© 2006-2014 Microchip Technology Inc.

12.34.5 APPLICATION OF VARIABLE PHASE PWM MODE

Variable phase PWM is used in newer power conversion topologies that are designed to reduce switching losses. In standard PWM methods, any time a transistor switches between the conducting state and the nonconducting state (and vice versa), the transistor is exposed to the full current and voltage condition for the period of time it takes the transistor to turn on or off. The power loss (V * I * Tsw * FPWM) becomes appreciable at high frequencies. The Zero Voltage Switching (ZVS) and Zero Current Switching (ZVC) circuit topologies attempt to use quasi-resonant techniques to shift either the voltage or current waveforms relative to each other. This action either makes the voltage or the current zero at the time the transistor turns on or off. If either the current or the voltage is zero, then there is no switching loss generated.

In variable phase PWM modes, the duty cycle is fixed at 50%, and the power flow is controlled by varying the phase relationship between the PWM channels, as shown in Figure 12-26.

FIGURE 12-26: APPLICATION OF VARIABLE PHASE PWM MODE

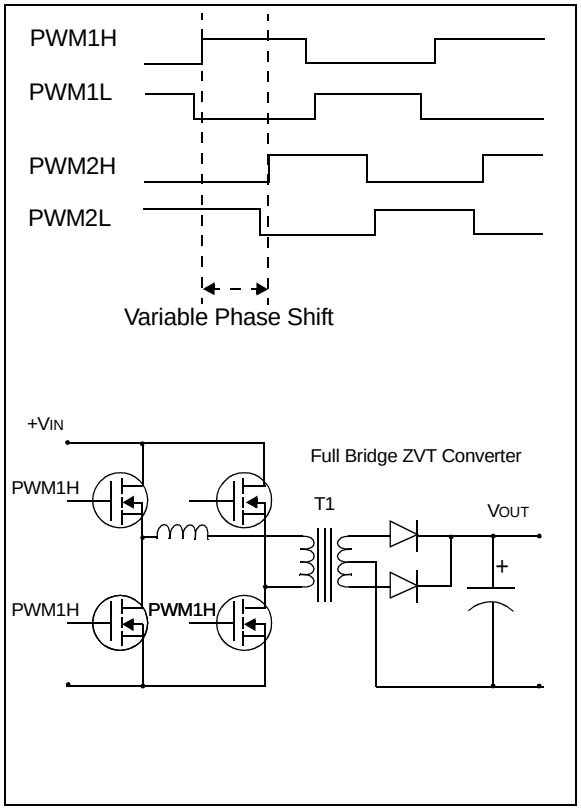

12.34.6 APPLICATION OF CURRENT RESET PWM MODE

In Current Reset PWM mode, the PWM frequency varies with the load current. This mode is different than most PWM modes because the user sets the maximum PWM period, but an external circuit measures the inductor current. When the inductor current falls below a specified value, the external current comparator circuit generates a signal that resets the PWM time base counter. The user specifies a PWM “on” time, and then some time after the PWM signal becomes inactive, the inductor current falls below a specified value and the PWM counter is reset earlier than the programmed PWM period. This mode is sometimes called Constant On-Time.

This mode should not be confused with cycle-by-cycle current-limiting PWM, where the PWM is asserted, an external circuit generates a current Fault and the PWM signal is turned off before its programmed duty cycle would normally turn it off. In this mode, shown in Figure 12-27, the PWM frequency is fixed per the time base period.

FIGURE 12-27: APPLICATION OF CURRENT RESET PWM MODE

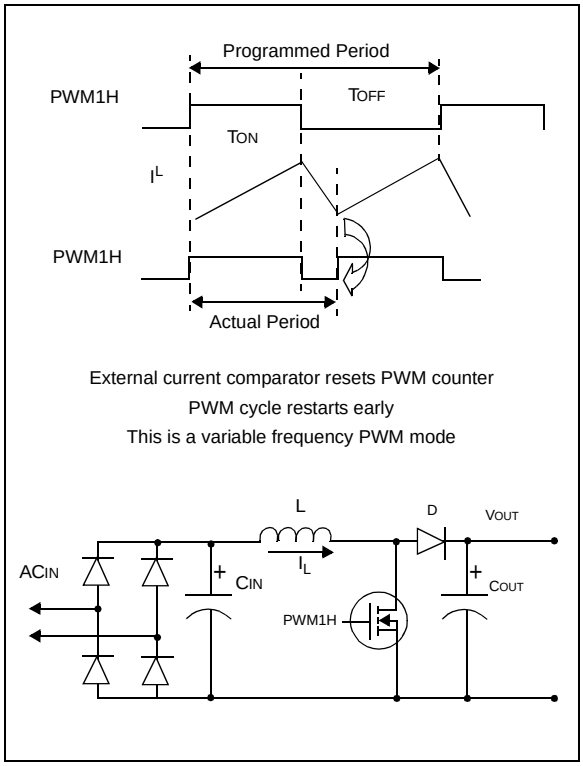

12.35 METHODS TO REDUCE EMI

The goal is to move the PWM edges around in time to spread the EMI energy over a range of frequencies to reduce the peak energy at any given frequency during the EMI measurement process, which measures long term averages.

The EMI measurement process integrates the EMI energy into 9 kHz wide frequency bins. Assuming that the carrier (PWM) frequency is 150 kHz, a 6% dither will yield a 9 kHz wide dither.

12.35.1 METHOD #1: PROGRAMMABLE FRC DITHER

This method dithers all of the PWM outputs and the system clock. The advantage of this method is that no CPU resources are required. It is automatic once it is setup. The user can periodically update these values to simulate a more random frequency pattern.

12.35.2 METHOD #2: SOFTWARE CONTROLLED DITHER

This method uses software to dither individual PWM channels by scaling the duty cycle and period. This method consumes CPU resources:

Assume:

4 PWM channels updated @ 150 kHz rate:

600 kHz x (5 clocks (2 mul, 1 tblrdl, 1 mov))

= 3 MIPS additional work load

12.35.3 METHOD #3: SOFTWARE SCALING OF TIME BASE PERIOD

This method used software to scale just the time base period. Assuming that the dither rate is relatively slow (about 250 Hz), the application control loop should be able to compensate for the changes in PWM period and adjust the duty cycle accordingly.

12.35.4 METHOD #4: FREQUENCY MODULATION

This method varies the frequency at which the PWM cycle is varied (dithered). The frequency modulation process is similar (mathematically speaking) to Phase Modulation when analyzed over a small time window.

The PWM module has the capability to phase modulate the PWM signals via the phase offset registers. Phase modulation has the advantage that the software is simpler and faster because multiple multiply operations (used for dithering frequency by scaling period and duty cycles) are replaced with fewer additions or simple updates of phase offset
values into the phase registers.

This method also has these advantages:

1. Multi-phase and variable phase PWM modes could still be created.
2. The PWM generators can still use the common time base, which simplifies determining when a “quiet time” is available for measuring current.

This method has one disadvantage: the phase modulation has to be at a relatively high update rate to achieve usable frequency spreading.

12.35.5 INDEPENDENT PWM CHANNEL DITHERING ISSUES:

Issues for multi-phase or variable phase designs using independent output dithering must consider these issues:

1. The phases are no longer phase aligned.
2. Control of current sharing among phases is more difficult.

© 2006-2014 Microchip Technology Inc.

12.36 EXTERNAL SYNCHRONIZATION FEATURES

In large power conversion systems, it is often desirable to be able to synchronize multiple power controllers to ensure that “beat frequencies” are not generated within the system, or as a means to ensure “quiet” periods during which current and voltage measurements can be made.

dsPIC30F202X devices (excluding 28-pin packages) have input and/or output pins that provide the capability to either synchronize the SMPS dsPIC DSC device with an external device or have external devices synchronized to the SMPS dsPIC DSC. These synchronizing features are enabled via the SYNCIEN and SYNCOEN bits in the PTCON control register in the PWM module.

The SYNCPOL bit in the PTCON register selects whether the rising edge or the falling edge of the SYNCI signal is the active edge. The SYNCPOL bit in the PTCON register also selects whether the SYNCO output pulse is low active or high active.

The SYNCSRC<2:0> bits in the PTCON register specify the source for the SYNCI signal.

If the SYNCI feature is enabled, the primary time base counter is reset when an active SYNCI edge is detected. If the SYNCO feature is enabled, an output pulse is generated when the primary time base counter rolls over at the end of a PWM cycle.

The recommended SYNCI pulse width should be more than 100 nsec. The expected SYNCO output pulse width will be approximately 100 nsec.

When using the SYNCI feature, it is recommended that the user program the period register with a period value that is slightly longer than the expected period of the external synchronization input signal. This provides protection in case the SYNCI signal is not received due to noise or external component failure. With a reasonable period value programmed into the PTPER register, the local power conversion process should remain operational even if the global synchronization signal is not received.

12.37 CPU LOAD STAGGERING

The SMPS dsPIC DSC has the ability to stagger the individual trigger comparison operations. This feature helps to level the processor’s workload to minimize situations where the processor is overloaded.

Assume a situation where there are four PWM channels controlling four independent voltage outputs. Assume further that each PWM generator is operating at 1000 kHz (1 µsec period) and each control loop is operating at 125 kHz (8 µsec).

The TRGDIV<2:0> bits in each TRGCONx register will be set to ‘111’, which selects that every 8th trigger comparison match will generate a trigger signal to the ADC to capture data and begin a conversion process.

If the stagger-in-time feature did not exist, all of the requests from all of the PWM trigger registers might occur at the same time. If this “pile-up” were to happen, some data sample might become stale (outdated) by the time the data for all four channels can be processed.

With the stagger-in-time feature, the trigger signals are spaced out over time (during succeeding PWM periods) so that all of the data is processed in an orderly manner.

The ROLL counter is a counter connected to the primary time base counter. The ROLL counter is incremented each time the primary time base counter reaches terminal count (period rollover).

The stagger-in-time feature is controlled by the TRGSTRT<5:0> bits in the TRGCONx registers. The TRGSTRT<5:0> bits specify the count value of the ROLL counter that must be matched before an individual trigger comparison module in each of the PWM generators can begin to count the trigger comparison events as specified by the TRGDIV<2:0> bits in the PWMCONx registers.

So, in our example with the four PWM generators, the first PWM’s TRGSTRT<5:0> bits would be ‘000’, the second PWM’s TRGSTRT bits would be set to ‘010’, the third PWM’s TRGSTRT bits would be set to ‘100’ and the fourth PWM’s TRGSTRT bits would be set to ‘110’. Therefore, over a total of eight PWM cycles, the four separate control loops could be run each with their own 2-µsec time period.

12.38 EXTERNAL TRIGGER BLANKING

Using the LEB<9:3> bits in the LEBCONx registers, the PWM module has the capability to blank (ignore) the external current and Fault inputs for a period of 0 to 1024 nsec. This feature is useful if power transistor turn-on induced transients make current sensing difficult at the start of a PWM cycle.

TABLE 12-4: POWER SUPPLY PWM REGISTER MAP

File Name	ADR	Bit 15	Bit 14	Bit 13	Bit 12	Bit 11	Bit 10	Bit 9	Bit 8	Bit 7	Bit 6	Bit 5	Bit 4	Bit 3	Bit 2	Bit 1	Bit 0	All Resets
PTCON	0400	PTEN	—	PTSIDL	SESTAT	SEIEN	EIPU	SYNCPOL	SYNCOEN	SYNCEN	SYNCSRC<2:0>			SEVTPS<3:0>				0000
PTPER	0402	PTPER<15:3>													—	—	—	FFF0
MDC	0404	MDC<15:0>																0000
SEVTCMP	0406	SEVTCMP<15:3>													—	—	—	0000
PWMCON1	0408	FLTSTAT	CLSTAT	TRGSTAT	FLTIEN	CLIEN	TRGIEN	ITB	MDCS	DTC<1:0>		—	—	—	—	XPRES	IUE	0000
IOCON1	040A	PENH	PENL	POLH	POLL	PMOD<1:0>		OVRENH	OVRENL	OVRDAT<1:0>		FLTDAT<1:0>		CLDAT<1:0>		—	OSYNC	0000
FCLCON1	040C	—	—	—	CLSRC<3:0>				CLPOL	CLMOD	FLTSRC<3:0>				FLTPOL	FLTMOD<1:0>		0000
PDC1	040E	PDC1<15:0>																0000
PHASE1	0410	PHASE1<15:2>														—	—	0000
DTR1	0412	—	—	DTR1<13:2>												—	—	0000
ALTDTR1	0414	—	—	ALTDTR1<13:2>												—	—	0000
TRIG1	0416	TRIG<15:3>													—	—	—	0000
TRGCON1	0418	TRGDIV<2:0>			—-	—-	—-	—-	—-	—-	—-	TRGSTRT<5:0>						0000
LEBCON1	041A	PHR	PHF	PLR	PLF	FLTLEBEN	CLLEBEN	LEB<9:3>							—	—	—	0000
PWMCON2	041C	FLTSTAT	CLSTAT	TRGSTAT	FLTIEN	CLIEN	TRGIEN	ITB	MDCS	DTC<1:0>		—	—	—	—	XPRES	IUE	0000
IOCON2	041E	PENH	PENL	POLH	POLL	PMOD<1:0>		OVRENH	OVRENL	OVRDAT<1:0>		FLTDAT<1:0>		CLDAT<1:0>		—	OSYNC	0000
FCLCON2	0420	—	—	—	CLSRC<3:0>				CLPOL	CLMOD	FLTSRC<3:0>				FLTPOL	FLTMOD<1:0>		0000
PDC2	0422	PDC2<15:0>																0000
PHASE2	0424	PHASE2<15:2>														—	—	0000
DTR2	0426	—	—	DTR2<13:2>												—	—	0000
ALTDTR2	0428	—	—	ALTDTR2<13:2>												—	—	0000
TRIG2	042A	TRIG<15:3>													—	—	—	0000
TRGCON2	042C	TRGDIV<2:0>			—-	—-	—-	—-	—-	—-	—-	TRGSTRT<5:0>						0000
LEBCON2	042E	PHR	PHF	PLR	PLF	FLTLEBEN	CLLEBEN	LEB<9:3>							—	—	—	0000
PWMCON3	0430	FLTSTAT	CLSTAT	TRGSTAT	FLTIEN	CLIEN	TRGIEN	ITB	MDCS	DTC<1:0>		—	—	—	—	XPRES	IUE	0000
IOCON3	0432	PENH	PENL	POLH	POLL	PMOD<1:0>		OVRENH	OVRENL	OVRDAT<1:0>		FLTDAT<1:0>		CLDAT<1:0>		—	OSYNC	0000
FCLCON3	0434	—	—	—	CLSRC<3:0>				CLPOL	CLMOD	FLTSRC<3:0>				FLTPOL	FLTMOD<1:0>		0000
PDC3	0436	PDC3<15:0>																0000
PHASE3	0438	PHASE3<15:2>														—	—	0000
DTR3	043A	—	—	DTR3<13:2>												—	—	0000
ALTDTR3	043C	—	—	ALTDTR3<13:2>												—	—	0000
TRIG3	043E	TRIG<15:3>													—	—	—	0000
TRGCON3	0440	TRGDIV<2:0>			—-	—-	—-	—-	—-	—-	—-	TRGSTRT<5:0>						0000
LEBCON3	0442	PHR	PHF	PLR	PLF	FLTLEBEN	CLLEBEN	LEB<9:3>							—	—	—	0000
PWMCON4	0444	FLTSTAT	CLSTAT	TRGSTAT	FLTIEN	CLIEN	TRGIEN	ITB	MDCS	DTC<1:0>		—	—	—	—	XPRES	IUE	0000
IOCON4	0446	PENH	PENL	POLH	POLL	PMOD<1:0>		OVRENH	OVRENL	OVRDAT<1:0>		FLTDAT<1:0>		CLDAT<1:0>		—	OSYNC	0000

© 2006-2014 Microchip Technology Inc.

TABLE 12-4: POWER SUPPLY PWM REGISTER MAP (CONTINUED)

File Name	ADR	Bit 15	Bit 14	Bit 13	Bit 12	Bit 11	Bit 10	Bit 9	Bit 8	Bit 7	Bit 6	Bit 5	Bit 4	Bit 3	Bit 2	Bit 1	Bit 0	All Resets
FCLCON4	0448	—	—	—	CLSRC<3:0>				CLPOL	CLMODE	FLTSRC<3:0>				FLTPOL	FLTMOD<1:0>		0000
PDC4	044A	PDC4<15:0>																0000
PHASE4	044C	PHASE4<15:2>														—	—	0000
DTR4	044E	—	—	DTR4<13:2>												—	—	0000
ALTDTR4	0450	—	—	ALTDTR4<13:2>												—	—	0000
TRIG4	0452	TRIG<15:3>													—	—	—	0000
TRGCON4	0454	TRGDIV<2:0>			—-	—-	—-	—-	—-	—-	—-	TRGSTRT<5:0>						0000
LEBCON4	0456	PHR	PHF	PLR	PLF	FLTLEBEN	CLLEBEN	LEB<9:3>							—	—	—	0000
Reserved	0458-47F	—	—	—	—	—	—	—	—	—	—	—	—	—	—	—	—	0000

© 2006-2014 Microchip Technology Inc.

NOTES:

© 2006-2014 Microchip Technology Inc.

13.0 SERIAL PERIPHERAL INTERFACE (SPI)

Note: This data sheet summarizes the features of this group of dsPIC30F1010/202X devices. It is not intended to be a comprehensive reference source. To complement the information in this data sheet, refer to the *"dsPIC30F Family Reference Manual"* (DS70046).

The Serial Peripheral Interface (SPI) module is a synchronous serial interface useful for communicating with other peripheral or microcontroller devices. These peripheral devices may be serial EEPROMs, shift registers, display drivers, ADC, etc. The SPI module is compatible with SPI and SIOP from Motorola®.

Note: The dsPIC30F101/202X family has only one SPI. All references to x = 2 are intended for software compatibility with other dsPIC DSC devices.

The SPI module consists of a 16-bit shift register, SPIxSR (where x = 1 or 2), used for shifting data in and out, and a buffer register, SPIxBUF. Two control registers, SPIxCON1 and SPIxCON2, configure the module. The SPIxSR register is not accessible by user software. A status register, SPIxSTAT, indicates various status conditions.

The serial interface consists of 4 pins: SDIx (serial data input), SDOx (serial data output), SCKx (shift clock input or output), and $\overline{\text{SSx}}$ (active-low slave select).

In Master mode operation, SCK is a clock output but in Slave mode, it is a clock input.

A series of eight (8) or sixteen (16) clock pulses shift out bits from the SPIxSR to SDOx pin and simultaneously shift in data from SDIx pin. An interrupt is generated when the transfer is complete and the corresponding interrupt flag bit (SPI1IF or SPI2IF) is set. This interrupt can be disabled through an interrupt enable bit (SPI1IE or SPI2IE).

The receive operation is double-buffered. When a complete byte is received, it is transferred from SPIxSR to SPIxBUF.

If the receive buffer is full when new data is being transferred from SPIxSR to SPIxBUF, the module sets the SPIROV bit (SPIxSTAT<6>) to indicate an overflow condition. The transfer of the data from SPIxSR to SPIxBUF is not completed, and the new data is lost. The module does not respond to transitions on the SCKx pin while SPIROV (SPIxSTAT<6>) is '1', effectively disabling the module until SPIxBUF is read by user software.

Transmit writes are also double-buffered. The user software writes to SPIxBUF. When the master or slave transfer is completed, the contents of the shift register (SPIxSR) are moved to the receive buffer. If any transmit data has been written to the buffer register, the contents of the transmit buffer are moved to SPIxSR. The received data is thus placed in SPIxBUF and the transmit data in SPIxSR is ready for the next transfer.

Note: Both the transmit buffer (SPIxTXB) and the receive buffer (SPIxRXB) are mapped to the same register address, SPIxBUF. Do not perform read-modify-write operations (such as bit-oriented instructions) on the SPIxBUF register.

To set up the SPI module for the Master mode of operation:

1. If using interrupts:
   a) Clear the SPIxIF bit in the respective IFSn register.
   b) Set the SPIxIE bit in the respective IECn register.
   c) Write the SPIxIP bits in the respective IPCn register to set the interrupt priority.
2. Write the desired settings to the SPIxCON1 register with MSTEN (SPIxCON1<5>) = 1.
3. Clear the SPIROV bit (SPIxSTAT<6>).
4. Enable SPI operation by setting the SPIEN bit (SPIxSTAT<15>).
5. Write the data to be transmitted to the SPIxBUF register. Transmission (and reception) start as soon as data is written to the SPIxBUF register.

To set up the SPI module for the Slave mode of operation:

1. Clear the SPIxBUF register.
2. If using interrupts:
   a) Clear the SPIxIF bit in the respective IFSn register.
   b) Set the SPIxIE bit in the respective IECn register.
   c) Write the SPIxIP bits in the respective IPCn register to set the interrupt priority.
3. Write the desired settings to the SPIxCON1 and SPIxCON2 registers with MSTEN (SPIxCON1<5>) = 0.
4. Clear the SMP bit (SPIxCON1<9>).
5. If the CKE (SPIxCON1<8>) bit is set, then the SSEN bit (SPIxCON1<7>) must be set to enable the $\overline{\text{SSx}}$ pin.
6. Clear the SPIROV bit (SPIxSTAT<6>).
7. Enable SPI operation by setting the SPIEN bit (SPIxSTAT<15>).

The SPI module generates an interrupt indicating completion of a byte or word transfer, as well as a separate interrupt for all SPI error conditions.

FIGURE 13-1: SPI MODULE BLOCK DIAGRAM

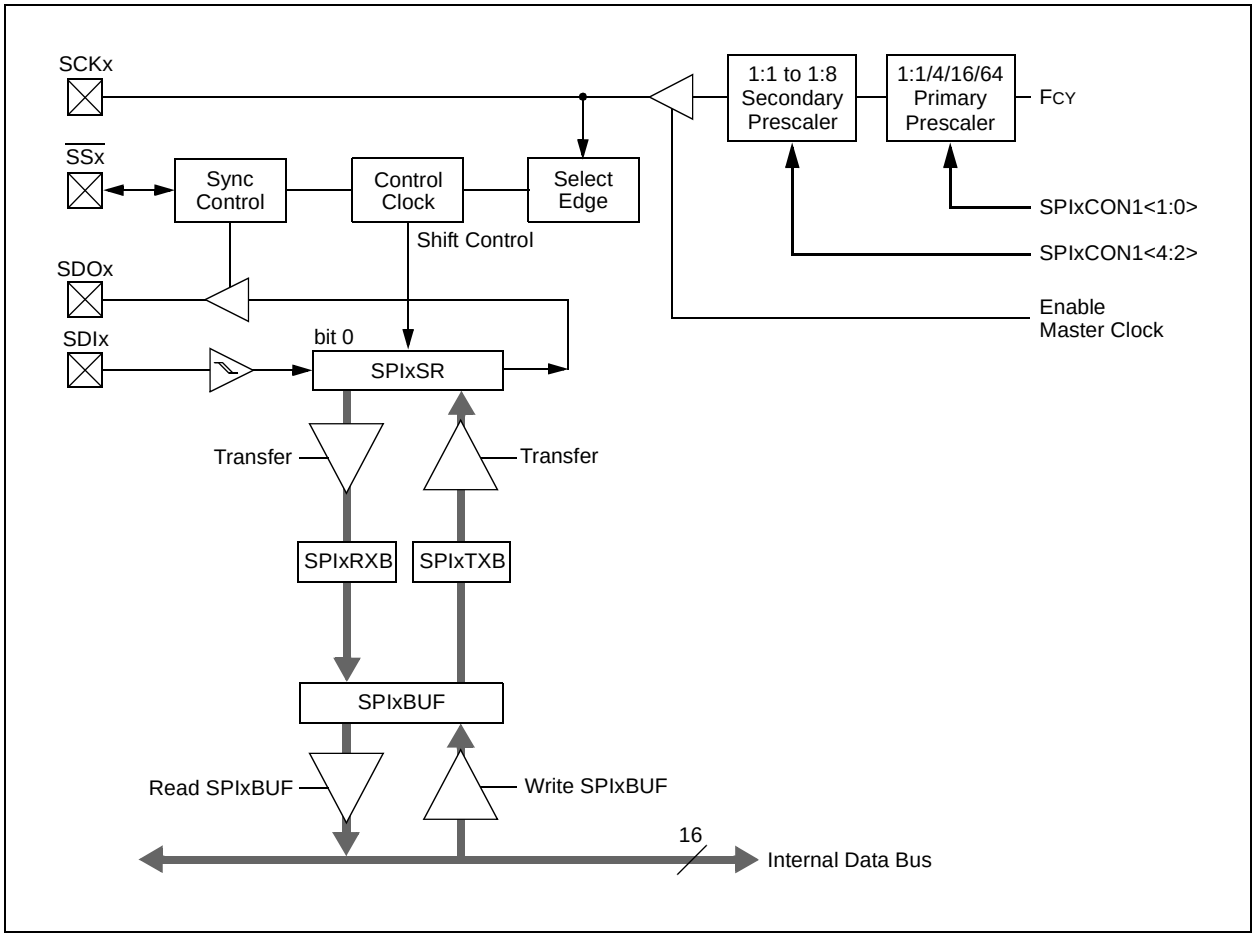

Note: The dsPIC30F1010/2020 devices do not contain the $\overline{SS1}$ pin. Therefore, the Slave Select and Frame Sync features cannot be used on these devices. These features are available on the dsPIC30F2023.

© 2006-2014 Microchip Technology Inc.

FIGURE 13-2: SPI MASTER/SLAVE CONNECTION

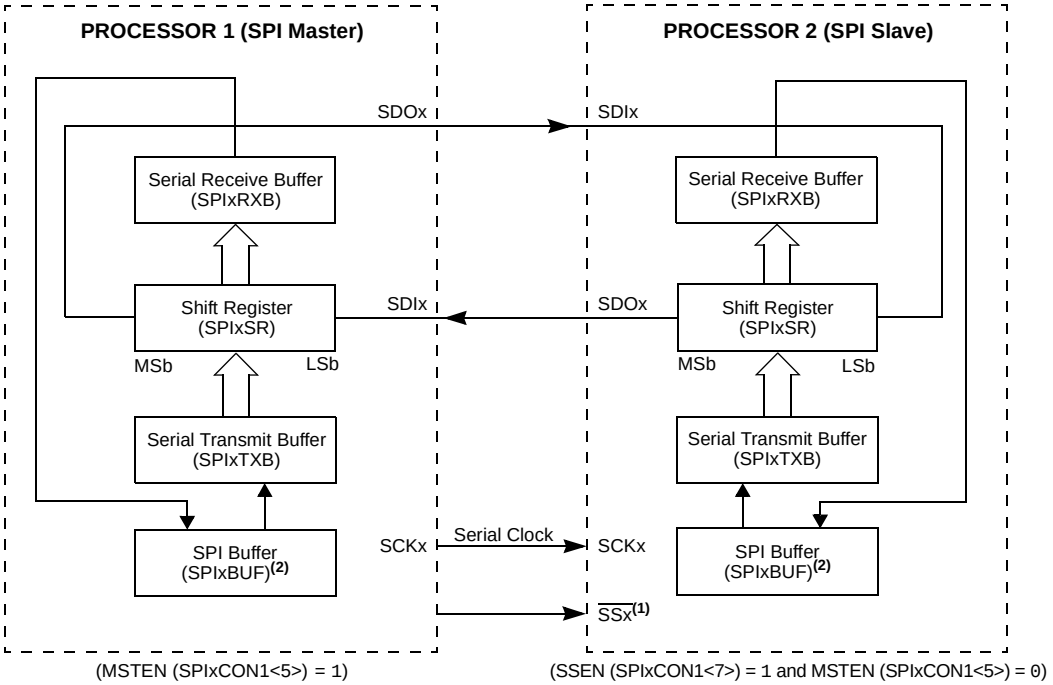

Note 1: Using the $\overline{SSx}$ pin in Slave mode of operation is optional.
2: User must write transmit data to/read received data from SPIxBUF. The SPIxTXB and SPIxRXB registers are memory mapped to SPIxBUF.

FIGURE 13-3: SPI MASTER, FRAME MASTER CONNECTION DIAGRAM

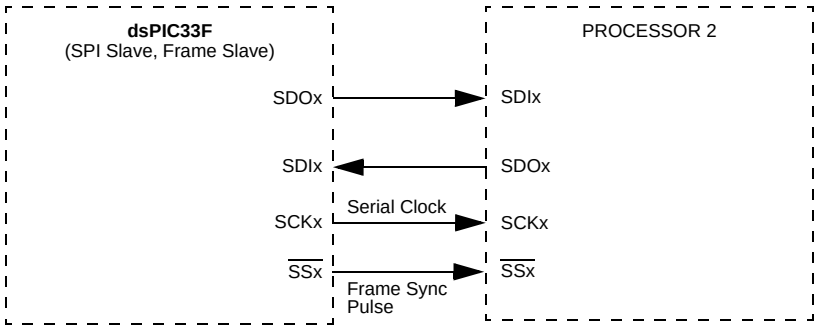

FIGURE 13-4: SPI MASTER, FRAME SLAVE CONNECTION DIAGRAM

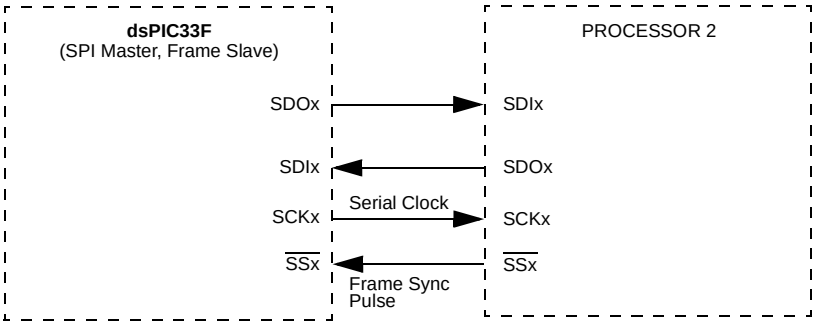

FIGURE 13-5: SPI SLAVE, FRAME MASTER CONNECTION DIAGRAM

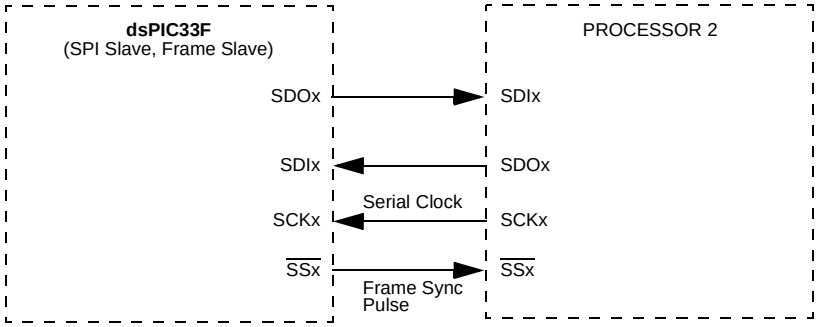

FIGURE 13-6: SPI SLAVE, FRAME SLAVE CONNECTION DIAGRAM

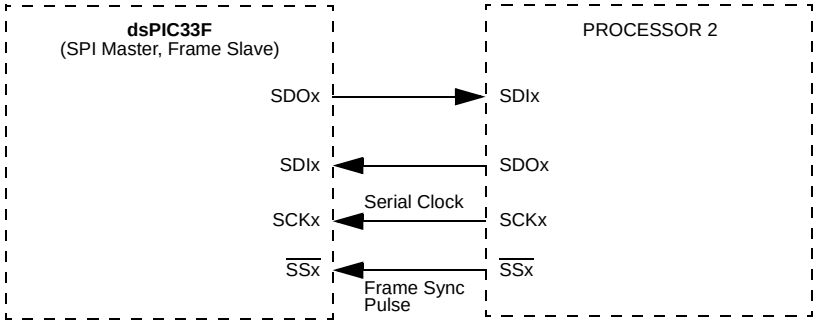

EQUATION 13-1: RELATIONSHIP BETWEEN DEVICE AND SPI CLOCK SPEED

$$F_{SCK} = \frac{F_{CY}}{\text{Primary Prescaler} * \text{Secondary Prescaler}}$$

TABLE 13-1: SAMPLE SCKx FREQUENCIES

F_{CY} = 40 MHz		Secondary Prescaler Settings				
		1:1	**2:1**	**4:1**	**6:1**	**8:1**
Primary Prescaler Settings	1:1	Invalid	Invalid	7500	5000	3750
	4:1	7500	3750	1875	1250	937.5
	16:1	1875	937.5	469	312.5	234.4
	64:1	469	234.4	117	78.1	58.6
F_{CY} = 5 MHz						
Primary Prescaler Settings	1:1	5000	2500	1250	833	625
	4:1	1250	625	313	208	156
	16:1	313	156	78	52	39
	64:1	78	39	20	13	10

Note: SCKx frequencies shown in kHz.

© 2006-2014 Microchip Technology Inc.

REGISTER 13-1: SPIxSTAT: SPIx STATUS AND CONTROL REGISTER

R/W-0	U-0	R/W-0	U-0	U-0	U-0	U-0	U-0
SPIEN	—	SPISIDL	—	—	—	—	—
bit 15							bit 8

U-0	R/C-0	U-0	U-0	U-0	U-0	R-0	R-0
—	SPIROV	—	—	—	—	SPITBF	SPIRBF
bit 7							bit 0

Legend:	C = Clearable bit		
R = Readable bit	W = Writable bit	U = Unimplemented bit, read as ‘0’	
-n = Value at POR	‘1’ = Bit is set	‘0’ = Bit is cleared	x = Bit is unknown

bit 15 **SPIEN:** SPIx Enable bit
1 = Enables module and configures SCKx, SDOx, SDIx and $\overline{SSx}$ as serial port pins
0 = Disables module

bit 14 **Unimplemented:** Read as ‘0’

bit 13 **SPISIDL:** Stop in Idle Mode bit
1 = Discontinue module operation when device enters Idle mode
0 = Continue module operation in Idle mode

bit 12-7 **Unimplemented:** Read as ‘0’

bit 6 **SPIROV:** Receive Overflow Flag bit
1 = A new byte/word is completely received and discarded. The user software has not read the previous data in the SPIxBUF register.
0 = No overflow has occurred

bit 5-2 **Unimplemented:** Read as ‘0’

bit 1 **SPITBF:** SPIx Transmit Buffer Full Status bit
1 = Transmit not yet started, SPIxTXB is full
0 = Transmit started, SPIxTXB is empty
Automatically set in hardware when CPU writes SPIxBUF location, loading SPIxTXB.
Automatically cleared in hardware when SPIx module transfers data from SPIxTXB to SPIxSR.

bit 0 **SPIRBF:** SPIx Receive Buffer Full Status bit
1 = Receive complete, SPIxRXB is full
0 = Receive is not complete, SPIxRXB is empty
Automatically set in hardware when SPIx transfers data from SPIxSR to SPIxRXB.
Automatically cleared in hardware when core reads SPIxBUF location, reading SPIxRXB.

REGISTER 13-2: SPIxCON1: SPIx CONTROL REGISTER 1

U-0	U-0	U-0	R/W-0	R/W-0	R/W-0	R/W-0	R/W-0
—	—	—	DISSCK	DISSDO	MODE16	SMP	CKE(1)
bit 15							bit 8

R/W-0	R/W-0	R/W-0	R/W-0	R/W-0	R/W-0	R/W-0	R/W-0
SSEN	CKP	MSTEN	SPRE<2:0>			PPRE<1:0>	
bit 7							bit 0

Legend:			
R = Readable bit	W = Writable bit	U = Unimplemented bit, read as ‘0’	
-n = Value at POR	‘1’ = Bit is set	‘0’ = Bit is cleared	x = Bit is unknown

bit 15-13 **Unimplemented:** Read as ‘0’

bit 12 **DISSCK:** Disable SCKx pin bit (SPI Master modes only)
1 = Internal SPI clock is disabled, pin functions as I/O
0 = Internal SPI clock is enabled

bit 11 **DISSDO:** Disable SDOx pin bit
1 = SDOx pin is not used by module; pin functions as I/O
0 = SDOx pin is controlled by the module

bit 10 **MODE16:** Word/Byte Communication Select bit
1 = Communication is word-wide (16 bits)
0 = Communication is byte-wide (8 bits)

bit 9 **SMP:** SPIx Data Input Sample Phase bit
Master mode:
1 = Input data sampled at end of data output time
0 = Input data sampled at middle of data output time
Slave mode:
SMP must be cleared when SPIx is used in Slave mode.

bit 8 **CKE:** SPIx Clock Edge Select bit(1)
1 = Serial output data changes on transition from active clock state to Idle clock state (see bit 6)
0 = Serial output data changes on transition from Idle clock state to active clock state (see bit 6)

bit 7 **SSEN:** Slave Select Enable bit (Slave mode)
1 = $\overline{SSx}$ pin used for Slave mode
0 = $\overline{SSx}$ pin not used by module. Pin controlled by port function.

bit 6 **CKP:** Clock Polarity Select bit
1 = Idle state for clock is a high level; active state is a low level
0 = Idle state for clock is a low level; active state is a high level

bit 5 **MSTEN:** Master Mode Enable bit
1 = Master mode
0 = Slave mode

bit 4-2 **SPRE<2:0>:** Secondary Prescale bits (Master mode)
111 = Secondary prescale 1:1
110 = Secondary prescale 2:1
...
000 = Secondary prescale 8:1

bit 1-0 **PPRE<1:0>:** Primary Prescale bits (Master mode)
11 = Primary prescale 1:1
10 = Primary prescale 4:1
01 = Primary prescale 16:1
00 = Primary prescale 64:1

Note 1: The CKE bit is not used in the Framed SPI modes. The user should program this bit to ‘0’ for the Framed SPI modes (FRMEN = 1).

© 2006-2014 Microchip Technology Inc.

REGISTER 13-3: SPIxCON2: SPIx CONTROL REGISTER 2

R/W-0	R/W-0	R/W-0	U-0	U-0	U-0	U-0	U-0
FRMEN	SPIFSD	FRMPOL	—	—	—	—	—
bit 15							bit 8

U-0	U-0	U-0	U-0	U-0	U-0	R/W-0	U-0
—	—	—	—	—	—	FRMDLY	—
bit 7							bit 0

Legend:			
R = Readable bit	W = Writable bit	U = Unimplemented bit, read as ‘0’	
-n = Value at POR	‘1’ = Bit is set	‘0’ = Bit is cleared	x = Bit is unknown

bit 15 **FRMEN**: Framed SPIx Support bit
1 = Framed SPIx support enabled ($\overline{SSx}$ pin used as frame sync pulse input/output)
0 = Framed SPIx support disabled

bit 14 **SPIFSD**: Frame Sync Pulse Direction Control bit
1 = Frame sync pulse input (slave)
0 = Frame sync pulse output (master)

bit 13 **FRMPOL**: Frame Sync Pulse Polarity bit
1 = Frame sync pulse is active-high
0 = Frame sync pulse is active-low

bit 12-2 **Unimplemented:** Read as ‘0’

bit 1 **FRMDLY**: Frame Sync Pulse Edge Select bit
1 = Frame sync pulse coincides with first bit clock
0 = Frame sync pulse precedes first bit clock

bit 0 **Unimplemented:** This bit must not be set to ‘1’ by the user application.

TABLE 13-2: SPI1 REGISTER MAP

SFR Name	Addr.	Bit 15	Bit 14	Bit 13	Bit 12	Bit 11	Bit 10	Bit 9	Bit 8	Bit 7	Bit 6	Bit 5	Bit 4	Bit 3	Bit 2	Bit 1	Bit 0	Reset State
SPI1STAT	0240	SPIEN	—	SPISIDL	—	—	—	—	—	—	SPIROV	—	—	—	—	SPITBF	SPIRBF	0000 0000 0000 0000
SPI1CON	0242	—	—	—	DISSCK	DISSDO	MODE16	SMP	CKE	SSEN	CKP	MSTEN	SPRE<2:0>			PPRE<1:0>		0000 0000 0000 0000
SPI1CON2	0244	FRMEN	SPIFSD	FRMPOL	—	—	—	—	—	—	—	—	—	—	—	FRMDLY	—	0000 0000 0000 0000
SPI1BUF	0246	Transmit and Receive Buffer																0000 0000 0000 0000

Legend: u = uninitialized bit

Note: Refer to the "*dsPIC30F Family Reference Manual*" (DS70046) for descriptions of register bit fields.

© 2006-2014 Microchip Technology Inc.

14.0 I²C™ MODULE

Note: This data sheet summarizes features of this group of dsPIC30F devices and is not intended to be a complete reference source. For more information on the CPU, peripherals, register descriptions and general device functionality, refer to the "*dsPIC30F Family Reference Manual*" (DS70046).

The Inter-Integrated Circuit (I^2C) module provides complete hardware support for both Slave and Multi-Master modes of the I^2C serial communication standard, with a 16-bit interface.

This module offers the following key features:

- I^2C interface supporting both Master and Slave operation.
- I^2C Slave mode supports 7 and 10-bit address
- I^2C Master mode supports 7 and 10-bit address
- I^2C port allows bidirectional transfers between master and slaves.
- Serial clock synchronization for I^2C port can be used as a handshake mechanism to suspend and resume serial transfer (SCLREL control).
- I^2C supports Multi-Master operation; detects bus collision and will arbitrate accordingly.

14.1 Operating Function Description

The hardware fully implements all the master and slave functions of the I^2C Standard and Fast mode specifications, as well as 7 and 10-bit addressing.

Thus, the I^2C module can operate either as a slave or a master on an I^2C bus.

14.1.1 VARIOUS I^2C MODES

The following types of I^2C operation are supported:

- I^2C Slave operation with 7 or 10-bit address
- I^2C Master operation with 7 or 10-bit address

See the I^2C programmer's model in Figure 14-1.

14.1.2 PIN CONFIGURATION IN I^2C MODE

I^2C has a 2-pin interface; pin SCL is clock and pin SDA is data.

FIGURE 14-1: PROGRAMMER'S MODEL

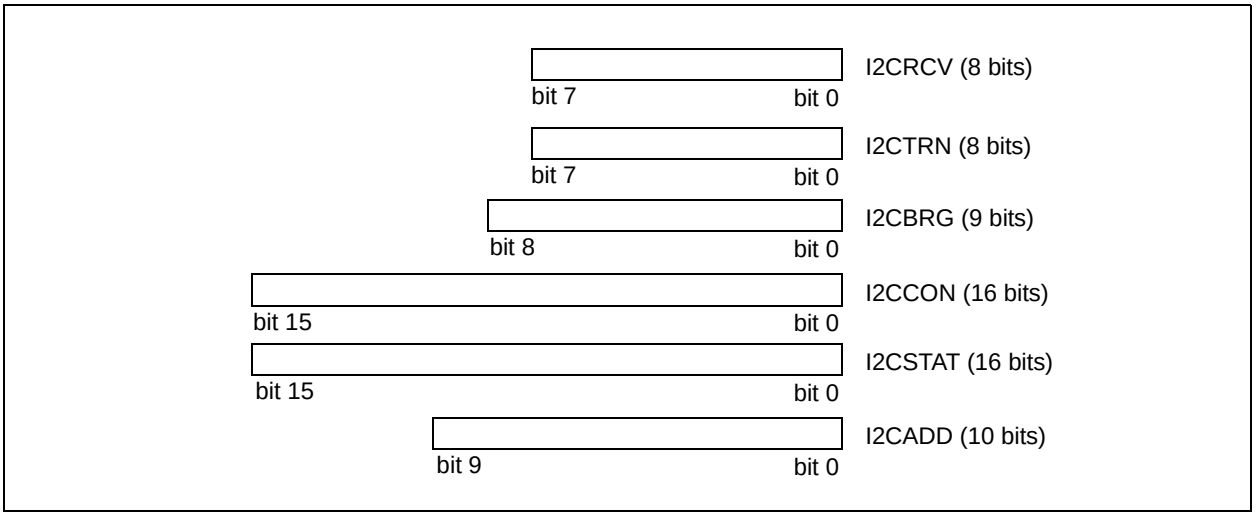

14.1.3 I^2C REGISTERS

I2CCON and I2CSTAT are Control and Status registers, respectively. The I2CCON register is readable and writable. The lower 6 bits of I2CSTAT are read-only. The remaining bits of the I2CSTAT are read/write.

I2CRSR is the shift register used for shifting data, whereas I2CRCV is the buffer register to which data bytes are written, or from which data bytes are read. I2CRCV is the receive buffer, as shown in Figure 16-1. I2CTRN is the transmit register to which bytes are written during a transmit operation, as shown in Figure 16-2.

The I2CADD register holds the slave address. A status bit, ADD10, indicates 10-bit Address mode. The I2CBRG acts as the Baud Rate Generator (BRG) reload value.

In receive operations, I2CRSR and I2CRCV together form a double-buffered receiver. When I2CRSR receives a complete byte, it is transferred to I2CRCV and an interrupt pulse is generated. During transmission, the I2CTRN is not double-buffered.

Note: Following a Restart condition in 10-bit mode, the user only needs to match the first 7-bit address.

FIGURE 14-2: I²C™ BLOCK DIAGRAM

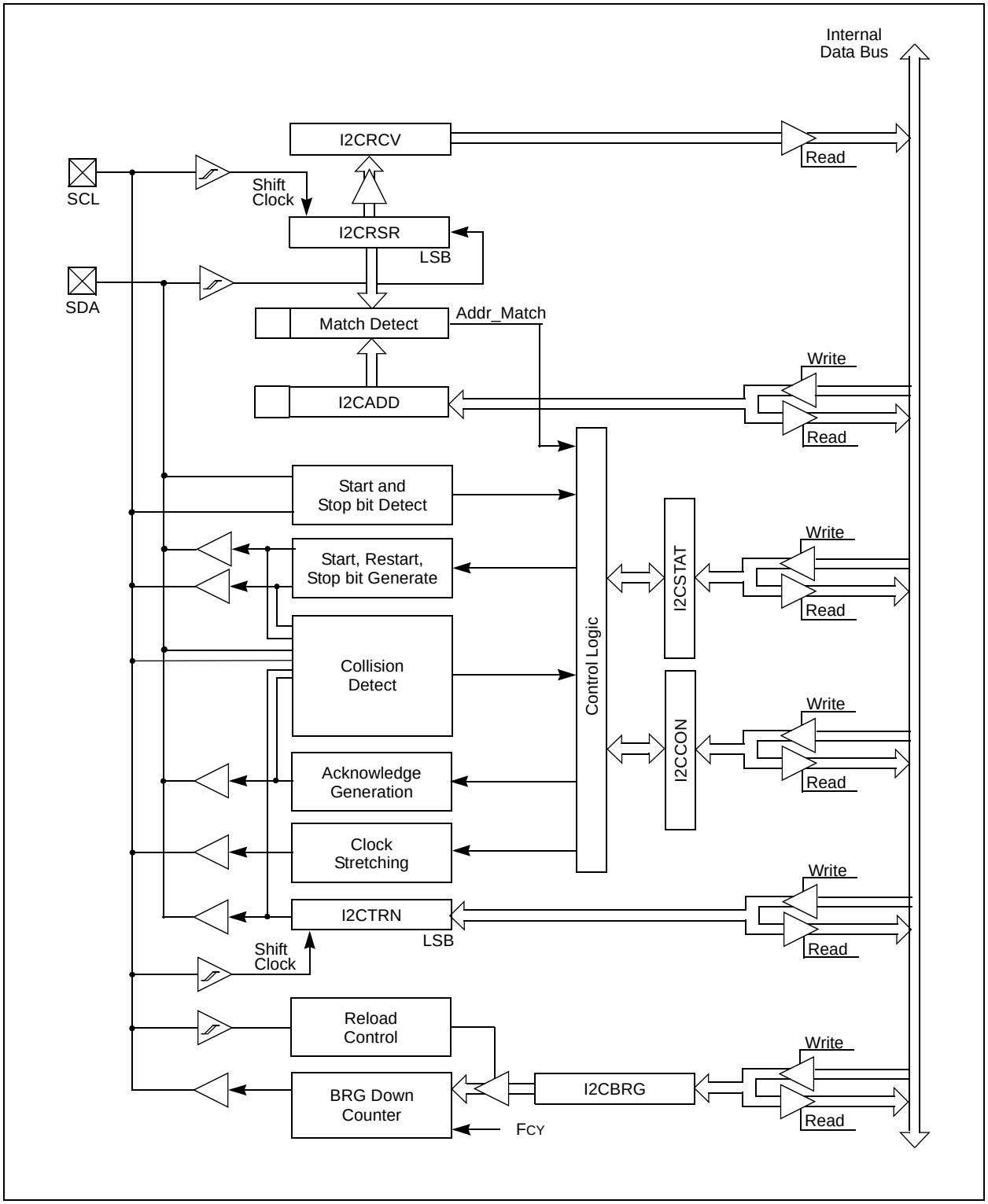

© 2006-2014 Microchip Technology Inc.

14.2 I²C Module Addresses

The I2CADD register contains the Slave mode addresses. The register is a 10-bit register.

If the A10M bit (I2CCON<10>) is '0', the address is interpreted by the module as a 7-bit address. When an address is received, it is compared to the 7 Least Significant bits of the I2CADD register.

If the A10M bit is '1', the address is assumed to be a 10-bit address. When an address is received, it will be compared with the binary value '1 1 1 1 0 A9 A8' (where A9, A8 are two Most Significant bits of I2CADD). If that value matches, the next address will be compared with the Least Significant 8 bits of I2CADD, as specified in the 10-bit addressing protocol.

14.3 I²C 7-bit Slave Mode Operation

Once enabled (I2CEN = 1), the slave module will wait for a Start bit to occur (i.e., the I²C module is 'Idle'). Following the detection of a Start bit, 8 bits are shifted into I2CRSR and the address is compared against I2CADD. In 7-bit mode (A10M = 0), bits I2CADD<6:0> are compared against I2CRSR<7:1> and I2CRSR<0> is the R_W bit. All incoming bits are sampled on the rising edge of SCL.

If an address match occurs, an acknowledgement will be sent, and the slave event interrupt flag (SI2CIF) is set on the falling edge of the ninth ($\overline{\text{ACK}}$) bit. The address match does not affect the contents of the I2CRCV buffer or the RBF bit.

14.3.1 SLAVE TRANSMISSION

If the R_W bit received is a '1', then the serial port will go into Transmit mode. It will send $\overline{\text{ACK}}$ on the ninth bit and then hold SCL to '0' until the CPU responds by writing to I2CTRN. SCL is released by setting the SCLREL bit, and 8 bits of data are shifted out. Data bits are shifted out on the falling edge of SCL, such that SDA is valid during SCL high (see timing diagram). The interrupt pulse is sent on the falling edge of the ninth clock pulse, regardless of the status of the $\overline{\text{ACK}}$ received from the master.

14.3.2 SLAVE RECEPTION

If the R_W bit received is a '0' during an address match, then Receive mode is initiated. Incoming bits are sampled on the rising edge of SCL. After 8 bits are received, if I2CRCV is not full or I2COV is not set, I2CRSR is transferred to I2CRCV. $\overline{\text{ACK}}$ is sent on the ninth clock.

If the RBF flag is set, indicating that I2CRCV is still holding data from a previous operation (RBF = 1), then $\overline{\text{ACK}}$ is not sent; however, the interrupt pulse is generated. In the case of an overflow, the contents of the I2CRSR are not loaded into the I2CRCV.

Note:	The I2CRCV will be loaded if the I2COV bit = 1 and the RBF flag = 0. In this case, a read of the I2CRCV was performed, but the user did not clear the state of the I2COV bit before the next receive occurred. The acknowledgement is not sent ($\overline{\text{ACK}}$ = 1) and the I2CRCV is updated.

14.4 I²C 10-bit Slave Mode Operation

In 10-bit mode, the basic receive and transmit operations are the same as in the 7-bit mode. However, the criteria for address match is more complex.

The I²C specification dictates that a slave must be addressed for a write operation, with two address bytes following a Start bit.

The A10M bit is a control bit that signifies that the address in I2CADD is a 10-bit address rather than a 7-bit address. The address detection protocol for the first byte of a message address is identical for 7-bit and 10-bit messages, but the bits being compared are different.

I2CADD holds the entire 10-bit address. Upon receiving an address following a Start bit, I2CRSR <7:3> is compared against a literal '11110' (the default 10-bit address) and I2CRSR<2:1> are compared against I2CADD<9:8>. If a match occurs and if R_W = 0, the interrupt pulse is sent. The ADD10 bit will be cleared to indicate a partial address match. If a match fails or R_W = 1, the ADD10 bit is cleared and the module returns to the Idle state.

The low byte of the address is then received and compared with I2CADD<7:0>. If an address match occurs, the interrupt pulse is generated and the ADD10 bit is set, indicating a complete 10-bit address match. If an address match did not occur, the ADD10 bit is cleared and the module returns to the Idle state.

14.4.1 10-BIT MODE SLAVE TRANSMISSION

Once a slave is addressed in this fashion, with the full 10-bit address (we will refer to this state as "PRIOR_ADDR_MATCH"), the master can begin sending data bytes for a slave reception operation.

14.4.2 10-BIT MODE SLAVE RECEPTION

Once addressed, the master can generate a Repeated Start, reset the high byte of the address and set the R_W bit without generating a Stop bit, thus initiating a slave transmit operation.

14.5 Automatic Clock Stretch

In the Slave modes, the module can synchronize buffer reads and write to the master device by clock stretching.

14.5.1 TRANSMIT CLOCK STRETCHING

Both 10-bit and 7-bit Transmit modes implement clock stretching by asserting the SCLREL bit after the falling edge of the ninth clock if the TBF bit is cleared, indicating the buffer is empty.

In Slave Transmit modes, clock stretching is always performed, irrespective of the STREN bit.

Clock synchronization takes place following the ninth clock of the transmit sequence. If the device samples an $\overline{\text{ACK}}$ on the falling edge of the ninth clock, and if the TBF bit is still clear, then the SCLREL bit is automatically cleared. The SCLREL being cleared to '0' will assert the SCL line low. The user's ISR must set the SCLREL bit before transmission is allowed to continue. By holding the SCL line low, the user has time to service the ISR and load the contents of the I2CTRN before the master device can initiate another transmit sequence.

Note 1:	If the user loads the contents of I2CTRN, setting the TBF bit before the falling edge of the ninth clock, the SCLREL bit will not be cleared and clock stretching will not occur.
2:	The SCLREL bit can be set in software, regardless of the state of the TBF bit.

14.5.2 RECEIVE CLOCK STRETCHING

The STREN bit in the I2CCON register can be used to enable clock stretching in Slave Receive mode. When the STREN bit is set, the SCL pin will be held low at the end of each data receive sequence.

14.5.3 CLOCK STRETCHING DURING 7-BIT ADDRESSING (STREN = 1)

When the STREN bit is set in Slave Receive mode, the SCL line is held low when the buffer register is full. The method for stretching the SCL output is the same for both 7 and 10-bit Addressing modes.

Clock stretching takes place following the ninth clock of the receive sequence. On the falling edge of the ninth clock at the end of the ACK sequence, if the RBF bit is set, the SCLREL bit is automatically cleared, forcing the SCL output to be held low. The user's ISR must set the SCLREL bit before reception is allowed to continue. By holding the SCL line low, the user has time to service the ISR and read the contents of the I2CRCV before the master device can initiate another receive sequence. This will prevent buffer overruns from occurring.

Note 1:	If the user reads the contents of the I2CRCV, clearing the RBF bit before the falling edge of the ninth clock, the SCLREL bit will not be cleared and clock stretching will not occur.
2:	The SCLREL bit can be set in software, regardless of the state of the RBF bit. The user should be careful to clear the RBF bit in the ISR before the next receive sequence in order to prevent an Overflow condition.

14.5.4 CLOCK STRETCHING DURING 10-BIT ADDRESSING (STREN = 1)

Clock stretching takes place automatically during the addressing sequence. Because this module has a register for the entire address, it is not necessary for the protocol to wait for the address to be updated.

After the address phase is complete, clock stretching will occur on each data receive or transmit sequence as was described earlier.

14.6 Software Controlled Clock Stretching (STREN = 1)

When the STREN bit is '1', the SCLREL bit may be cleared by software to allow software to control the clock stretching. The logic will synchronize writes to the SCLREL bit with the SCL clock. Clearing the SCLREL bit will not assert the SCL output until the module detects a falling edge on the SCL output and SCL is sampled low. If the SCLREL bit is cleared by the user while the SCL line has been sampled low, the SCL output will be asserted (held low). The SCL output will remain low until the SCLREL bit is set, and all other devices on the I^2C bus have deasserted SCL. This ensures that a write to the SCLREL bit will not violate the minimum high time requirement for SCL.

If the STREN bit is '0', a software write to the SCLREL bit will be disregarded and have no effect on the SCLREL bit.

14.7 Interrupts

The I^2C module generates two interrupt flags, MI2CIF (I^2C Master Interrupt Flag) and SI2CIF (I^2C Slave Interrupt Flag). The MI2CIF interrupt flag is activated on completion of a master message event. The SI2CIF interrupt flag is activated on detection of a message directed to the slave.

© 2006-2014 Microchip Technology Inc.

14.8 Slope Control

The I^{2}C standard requires slope control on the SDA and SCL signals for Fast mode (400 kHz). The control bit, DISSLW, enables the user to disable slew rate control, if desired. It is necessary to disable the slew rate control for 1 MHz mode.

14.9 IPMI Support

The control bit IPMIEN enables the module to support Intelligent Peripheral Management Interface (IPMI). When this bit is set, the module accepts and acts upon all addresses.

14.10 General Call Address Support

The general call address can address all devices. When this address is used, all devices should, in theory, respond with an acknowledgement.

The general call address is one of eight addresses reserved for specific purposes by the I^{2}C protocol. It consists of all '0's with R_W = 0.

The general call address is recognized when the General Call Enable (GCEN) bit is set (I2CCON<7> = 1). Following a Start bit detection, 8 bits are shifted into I2CRSR and the address is compared with I2CADD, and is also compared with the general call address which is fixed in hardware.

If a general call address match occurs, the I2CRSR is transferred to the I2CRCV after the eighth clock, the RBF flag is set, and, on the falling edge of the ninth bit ($\overline{\text{ACK}}$ bit), the master event interrupt flag (MI2CIF) is set.

When the interrupt is serviced, the source for the interrupt can be checked by reading the contents of the I2CRCV to determine if the address was device specific, or a general call address.

14.11 I^{2}C Master Support

As a Master device, six operations are supported.

- Assert a Start condition on SDA and SCL.
- Assert a Restart condition on SDA and SCL.
- Write to the I2CTRN register initiating transmission of data/address.
- Generate a Stop condition on SDA and SCL.
- Configure the I^{2}C port to receive data.
- Generate an $\overline{\text{ACK}}$ condition at the end of a received byte of data.

14.12 I^{2}C Master Operation

The master device generates all of the serial clock pulses and the Start and Stop conditions. A transfer is ended with a Stop condition or with a Repeated Start condition. Since the Repeated Start condition is also the beginning of the next serial transfer, the I^{2}C bus will not be released.

In Master Transmitter mode, serial data is output through SDA, while SCL outputs the serial clock. The first byte transmitted contains the slave address of the receiving device (7 bits) and the data direction bit. In this case, the data direction bit (R_W) is logic '0'. Serial data is transmitted 8 bits at a time. After each byte is transmitted, an $\overline{\text{ACK}}$ bit is received. Start and Stop conditions are output to indicate the beginning and the end of a serial transfer.

In Master Receive mode, the first byte transmitted contains the slave address of the transmitting device (7 bits) and the data direction bit. In this case, the data direction bit (R_W) is logic 1. Thus, the first byte transmitted is a 7-bit slave address, followed by a '1' to indicate receive bit. Serial data is received via SDA, while SCL outputs the serial clock. Serial data is received 8 bits at a time. After each byte is received, an $\overline{\text{ACK}}$ bit is transmitted. Start and Stop conditions indicate the beginning and end of transmission.

14.12.1 I^{2}C MASTER TRANSMISSION

Transmission of a data byte, a 7-bit address, or the second half of a 10-bit address is accomplished by simply writing a value to I2CTRN register. The user should only write to I2CTRN when the module is in a WAIT state. This action will set the Buffer Full Flag (TBF) and allow the Baud Rate Generator to begin counting and start the next transmission. Each bit of address/data will be shifted out onto the SDA pin after the falling edge of SCL is asserted. The Transmit Status Flag, TRSTAT (I2CSTAT<14>), indicates that a master transmit is in progress.

14.12.2 I^{2}C MASTER RECEPTION

Master mode reception is enabled by programming the receive enable (RCEN) bit (I2CCON<3>). The I^{2}C module must be Idle before the RCEN bit is set, otherwise the RCEN bit will be disregarded. The Baud Rate Generator begins counting, and, on each rollover, the state of the SCL pin toggles, and data is shifted in to the I2CRSR on the rising edge of each clock.

14.12.3 BAUD RATE GENERATOR

In I^{2}C Master mode, the reload value for the BRG is located in the I2CBRG register. When the BRG is loaded with this value, the BRG counts down to '0' and stops until another reload has taken place. If clock arbitration is taking place, for instance, the BRG is reloaded when the SCL pin is sampled high.

As per the I^{2}C standard, FSCK may be 100 kHz or 400 kHz. However, the user can specify any baud rate up to 1 MHz. I2CBRG values of '0' or '1' are illegal.

EQUATION 14-1: I2CBRG VALUE

$$I2CBRG = \left(\frac{Fcy}{Fscl} - \frac{Fcy}{1,111,111}\right) - 1$$

14.12.4 CLOCK ARBITRATION

Clock arbitration occurs when the master deasserts the SCL pin (SCL allowed to float high) during any receive, transmit or Restart/Stop condition. When the SCL pin is allowed to float high, the Baud Rate Generator is suspended from counting until the SCL pin is actually sampled high. When the SCL pin is sampled high, the Baud Rate Generator is reloaded with the contents of I2CBRG and begins counting. This ensures that the SCL high time will always be at least one BRG rollover count in the event that the clock is held low by an external device.

14.12.5 MULTI-MASTER COMMUNICATION, BUS COLLISION AND BUS ARBITRATION

Multi-Master operation support is achieved by bus arbitration. When the master outputs address/data bits onto the SDA pin, arbitration takes place when the master outputs a '1' on SDA, by letting SDA float high while another master asserts a '0'. When the SCL pin floats high, data should be stable. If the expected data on SDA is a '1' and the data sampled on the SDA pin = 0, then a bus collision has taken place. The master will set the MI2CIF pulse and reset the master portion of the I^{2}C port to its Idle state.

If a transmit was in progress when the bus collision occurred, the transmission is halted, the TBF flag is cleared, the SDA and SCL lines are deasserted, and a value can now be written to I2CTRN. When the user services the I^{2}C master event Interrupt Service Routine, if the I^{2}C bus is free (i.e., the P bit is set) the user can resume communication by asserting a Start condition.

If a Start, Restart, Stop or Acknowledge condition was in progress when the bus collision occurred, the condition is aborted, the SDA and SCL lines are deasserted, and the respective control bits in the I2CCON register are cleared to '0'. When the user services the bus collision Interrupt Service Routine, and if the I^{2}C bus is free, the user can resume communication by asserting a Start condition.

The Master will continue to monitor the SDA and SCL pins and, if a Stop condition occurs, the MI2CIF bit will be set.

A write to the I2CTRN will start the transmission of data at the first data bit, regardless of where the transmitter left off when bus collision occurred.

In a Multi-Master environment, the interrupt generation on the detection of Start and Stop conditions allows the determination of when the bus is free. Control of the I^{2}C bus can be taken when the P bit is set in the I2CSTAT register, or the bus is Idle and the S and P bits are cleared.

14.13 I^{2}C Module Operation During CPU Sleep and Idle Modes

14.13.1 I^{2}C OPERATION DURING CPU SLEEP MODE

When the device enters Sleep mode, all clock sources to the module are shutdown and stay at logic '0'. If Sleep occurs in the middle of a transmission, and the state machine is partially into a transmission as the clocks stop, then the transmission is aborted. Similarly, if Sleep occurs in the middle of a reception, then the reception is aborted.

14.13.2 I^{2}C OPERATION DURING CPU IDLE MODE

For the I^{2}C, the I2CSIDL bit selects if the module will stop on Idle or continue on Idle. If I2CSIDL = 0, the module will continue operation on assertion of the Idle mode. If I2CSIDL = 1, the module will stop on Idle.

© 2006-2014 Microchip Technology Inc.

TABLE 14-1: I²C™ REGISTER MAP

SFR Name	Addr.	Bit 15	Bit 14	Bit 13	Bit 12	Bit 11	Bit 10	Bit 9	Bit 8	Bit 7	Bit 6	Bit 5	Bit 4	Bit 3	Bit 2	Bit 1	Bit 0	Reset State
I2CRCV	0200	—	—	—	—	—	—	—	—	Receive Register								0000 0000 0000 0000
I2CTRN	0202	—	—	—	—	—	—	—	—	Transmit Register								0000 0000 1111 1111
I2CBRG	0204	—	—	—	—	—	—	—	Baud Rate Generator									0000 0000 0000 0000
I2CCON	0206	I2CEN	—	I2CSIDL	SCLREL	IPMIEN	A10M	DISSLW	SMEN	GCEN	STREN	ACKDT	ACKEN	RCEN	PEN	RSEN	SEN	0001 0000 0000 0000
I2CSTAT	0208	ACKSTAT	TRSTAT	—	—	—	BCL	GCSTAT	ADD10	IWCOL	I2COV	D_A	P	S	R_W	RBF	TBF	0000 0000 0000 0000
I2CADD	020A	—	—	—	—	—	—	Address Register										0000 0000 0000 0000

Note: Refer to the "*dsPIC30F Family Reference Manual*" (DS70046) for descriptions of register bit fields.

© 2006-2014 Microchip Technology Inc.

NOTES:

© 2006-2014 Microchip Technology Inc.

15.0 UNIVERSAL ASYNCHRONOUS RECEIVER TRANSMITTER (UART) MODULE

Note: This data sheet summarizes features of this group of dsPIC30F devices and is not intended to be a complete reference source. For more information on the CPU, peripherals, register descriptions and general device functionality, refer to the "*dsPIC30F Family Reference Manual*" (DS70046).

The Universal Asynchronous Receiver Transmitter (UART) module is one of the serial I/O modules available in the dsPIC30F1010/202X device family. The UART is a full-duplex asynchronous system that can communicate with peripheral devices, such as personal computers, LIN, RS-232 and RS-485 interfaces. The module also includes an IrDA encoder and decoder.

The primary features of the UART module are:

- Full-Duplex 8 or 9-bit Data Transmission through the U1TX and U1RX pins
- Even, Odd or No Parity Options (for 8-bit data)
- One or Two Stop bits
- Fully Integrated Baud Rate Generator with 16-bit Prescaler
- Baud Rates Ranging from 1 Mbps to 15 bps at 16 MIPS
- 4-Deep First-In-First-Out (FIFO) Transmit Data Buffer
- 4-Deep FIFO Receive Data Buffer
- Parity, Framing and Buffer Overrun Error Detection
- Support for 9-bit mode with Address Detect (9th bit = 1)
- Transmit and Receive Interrupts
- Loopback mode for Diagnostic Support
- Support for Sync and Break Characters
- Supports Automatic Baud Rate Detection
- IrDA Encoder and Decoder Logic
- 16x Baud Clock Output for IrDA Support

A simplified block diagram of the UART is shown in Figure 15-1. The UART module consists of these key important hardware elements:

- Baud Rate Generator
- Asynchronous Transmitter
- Asynchronous Receiver

FIGURE 15-1: UART SIMPLIFIED BLOCK DIAGRAM

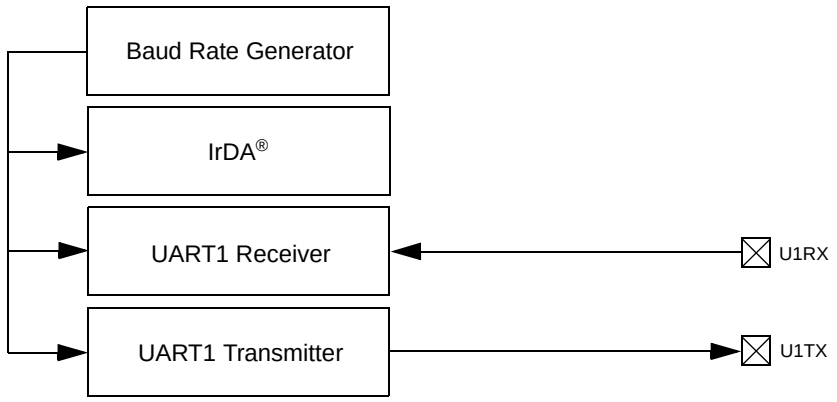

15.1 UART Baud Rate Generator (BRG)

The UART module includes a dedicated 16-bit Baud Rate Generator. The U1BRG register controls the period of a free-running 16-bit timer. Equation 15-1 shows the formula for computation of the baud rate with BRGH = 0.

EQUATION 15-1: UART BAUD RATE WITH BRGH = 0(1,2,3)

$$\text{Baud Rate} = \frac{F_{CY}}{16 \cdot (U1BRG + 1)}$$

$$U1BRG = \frac{F_{CY}}{16 \cdot \text{Baud Rate}} - 1$$

Note 1: F_{CY} denotes the instruction cycle clock frequency ($F_{OSC}/2$).

2: Assuming external oscillator with frequency of 15 MHz and PLL disabled, F_{CY} is 7.5 MHz.

3: Assuming external oscillator with frequency of 15 MHz and PLL enabled, F_{CY} is 30 MHz.

Example 15-1 shows the calculation of the baud rate error for the following conditions:

- F_{CY} = 7.5 MHz
- Desired Baud Rate = 9600

The maximum baud rate (BRGH = 0) possible is $F_{CY}/16$ (for U1BRG = 0), and the minimum baud rate possible is $F_{CY}/(16 * 65536)$.

Equation 15-2 shows the formula for computation of the baud rate with BRGH = 1.

EQUATION 15-2: UART BAUD RATE WITH BRGH = 1(1,2,3)

$$\text{Baud Rate} = \frac{F_{CY}}{4 \cdot (U1BRG + 1)}$$

$$U1BRG = \frac{F_{CY}}{4 \cdot \text{Baud Rate}} - 1$$

Note 1: F_{CY} denotes the instruction cycle clock frequency.

2: Assuming external oscillator with frequency of 15 MHz and PLL disabled, F_{CY} is 7.5 MHz.

3: Assuming external oscillator with frequency of 15 MHz and PLL enabled, F_{CY} is 30 MHz.

The maximum baud rate (BRGH = 1) possible is $F_{CY}/4$ (for U1BRG = 0) and the minimum baud rate possible is $F_{CY}/(4 * 65536)$.

Writing a new value to the U1BRG register causes the BRG timer to be reset (cleared). This ensures the BRG does not wait for a timer overflow before generating the new baud rate.

EXAMPLE 15-1: BAUD RATE ERROR CALCULATION (BRGH = 0)(1)

Desired Baud Rate = Fcy/(16 (U1BRG + 1))

Solving for U1BRG value:

U1BRG = ((F_{CY}/Desired Baud Rate)/16) – 1
U1BRG = ((7500000/9600)/16) – 1
U1BRG = 48

Calculated Baud Rate = 7500000/(16 (48 + 1))
= 9566

Error = (Calculated Baud Rate – Desired Baud Rate)
Desired Baud Rate
= (9566 – 9600)/9600
= -0.35%

Note 1: Based on $T_{CY} = 2/F_{OSC}$, PLL are disabled.

© 2006-2014 Microchip Technology Inc.

15.2 Transmitting in 8-bit Data Mode

1. Set up the UART:
   a) Write appropriate values for data, parity and Stop bits.
   b) Write appropriate baud rate value to the U1BRG register.
   c) Set up transmit and receive interrupt enable and priority bits.
2. Enable the UART.
3. Set the UTXEN bit (causes a transmit interrupt).
4. Write data byte to lower byte of TXxREG word. The value will be immediately transferred to the Transmit Shift Register (TSR), and the serial bit stream will start shifting out with next rising edge of the baud clock.
5. Alternately, the data byte may be transferred while UTXEN = 0, and then the user may set UTXEN. This will cause the serial bit stream to begin immediately because the baud clock will start from a cleared state.
6. A transmit interrupt will be generated as per interrupt control bit, UTXISELx.

15.3 Transmitting in 9-bit Data Mode

1. Set up the UART (as described in **Section 15.2 "Transmitting in 8-bit Data Mode"**).
2. Enable the UART.
3. Set the UTXEN bit (causes a transmit interrupt).
4. Write TXxREG as a 16-bit value only.
5. A word write to TXxREG triggers the transfer of the 9-bit data to the TSR. Serial bit stream will start shifting out with the first rising edge of the baud clock.
6. A transmit interrupt will be generated as per the setting of control bit, UTXISELx.

15.4 Break and Sync Transmit Sequence

The following sequence will send a message frame header made up of a Break, followed by an auto-baud Sync byte.

1. Configure the UART for the desired mode.
2. Set UTXEN and UTXBRK – sets up the Break character,
3. Load the TXxREG with a dummy character to initiate transmission (value is ignored).
4. Write '55h' to TXxREG – loads Sync character into the transmit FIFO.
5. After the Break has been sent, the UTXBRK bit is reset by hardware. The Sync character now transmits.

15.5 Receiving in 8-bit or 9-bit Data Mode

1. Set up the UART (as described in **Section 15.2 "Transmitting in 8-bit Data Mode"**).
2. Enable the UART.
3. A receive interrupt will be generated when one or more data characters have been received as per interrupt control bit, URXISELx.
4. Read the OERR bit to determine if an overrun error has occurred. The OERR bit must be reset in software.
5. Read RXxREG.

The act of reading the RXxREG character will move the next character to the top of the receive FIFO, including a new set of PERR and FERR values.

15.6 Built-in IrDA Encoder and Decoder

The UART has full implementation of the IrDA encoder and decoder as part of the UART module. The built-in IrDA encoder and decoder functionality is enabled using the IREN bit U1MODE<12>. When enabled (IREN = 1), the receive pin (U1RX) acts as the input from the infrared receiver. The transmit pin (U1TX) acts as the output to the infrared transmitter.

15.7 Alternate UART I/O Pins

An alternate set of I/O pins, U1ATX and U1ARX can be used for communications. The alternate UART pins are useful when the primary UART pins are shared by other peripherals. The alternate I/O pins are enabled by setting the ALTIO bit in the UxMODE register. If ALTIO = 1, the U1ATX and U1ARX pins are used by the UART module, instead of the U1TX and U1RX pins. If ALTIO = 0, the U1TX and U1RX pins are used by the UART module.

REGISTER 15-1: U1MODE: UART1 MODE REGISTER

R/W-0	U-0	R/W-0	R/W-0	U-0	R/W-0	U-0	U-0
UARTEN	—	USIDL	IREN	—	ALTIO	—	—
bit 15							bit 8

R/W-0 HC	R/W-0	R/W-0 HC	R/W-0	R/W-0	R/W-0	R/W-0	R/W-0
WAKE	LPBACK	ABAUD	RXINV	BRGH	PDSEL1	PDSEL0	STSEL
bit 7							bit 0

Legend: U = Unimplemented bit, read as ‘0’			
R = Readable bit	W = Writable bit	HC = Hardware Cleared	HS = Hardware Select
-n = Value at POR	‘1’ = Bit is set	‘0’ = Bit is cleared	x = Bit is unknown

bit 15 **UARTEN:** UART1 Enable bit
1 = UART1 enabled; all UART1 pins are controlled by UART1 as defined by UEN<1:0>
0 = UART1 disabled; all UART1 pins are controlled by PORT latches; UART1 power consumption minimal

bit 14 **Unimplemented:** Read as ‘0’

bit 13 **USIDL:** Stop in Idle Mode bit
1 = Discontinue module operation when device enters Idle mode
0 = Continue module operation in Idle mode

bit 12 **IREN:** IrDA Encoder and Decoder Enable bit
1 = IrDA encoder and decoder enabled
0 = IrDA encoder and decoder disabled

Note: This feature is only available for the 16x BRG mode (BRGH = 0).

bit 11 **Unimplemented:** Read as ‘0’

bit 10 **ALTIO:** UART Alternate I/O Selection bit
1 = UART communicates using U1ATX and U1ARX I/O pins
0 = UART communicates using U1TX and U1RX I/O pins.

bit 9-8 **Unimplemented:** Read as ‘0’

bit 7 **WAKE:** Wake-up on Start bit Detect During Sleep Mode Enable bit
1 = UART1 will continue to sample the U1RX pin; interrupt generated on falling edge, bit cleared in hardware on following rising edge
0 = No wake-up enabled

bit 6 **LPBACK:** UART1 Loopback Mode Select bit
1 = Enable Loopback mode
0 = Loopback mode is disabled

bit 5 **ABAUD:** Auto-Baud Enable bit
1 = Enable baud rate measurement on the next character – requires reception of a Sync field (55h); cleared in hardware upon completion
0 = Baud rate measurement disabled or completed

bit 4 **RXINV:** Receive Polarity Inversion bit
1 = U1RX Idle state is ‘0’
0 = U1RX Idle state is ‘1’

bit 3 **BRGH:** High Baud Rate Enable bit
1 = BRG generates 4 clocks per bit period (4x Baud Clock, High-Speed mode)
0 = BRG generates 16 clocks per bit period (16x Baud Clock, Standard mode)

© 2006-2014 Microchip Technology Inc.

REGISTER 15-1: U1MODE: UART1 MODE REGISTER (CONTINUED)

bit 2-1	**PDSEL1:PDSEL0:** Parity and Data Selection bits 11 = 9-bit data, no parity 10 = 8-bit data, odd parity 01 = 8-bit data, even parity 00 = 8-bit data, no parity
bit 0	**STSEL:** Stop Bit Selection bit 1 = Two Stop bits 0 = One Stop bit

REGISTER 15-2: U1STA: UART1 STATUS AND CONTROL REGISTER

R/W-0	R/W-0	R/W-0	U-0	R/W-0	R/W-0	R/W-0	R/W-0
UTXISEL1	UTXINV(1)	UTXISEL0	—	UTXBRK	UTXEN	UTXBF	TRMT
bit 15							bit 8

R/W-0	R/W-0	R/W-0	R/W-0	R/W-0	R/W-0	R/W-0	R/W-0
URXISEL1	URXISEL0	ADDEN	RIDLE	PERR	FERR	OERR	URXDA
bit 7							bit 0

Legend: U = Unimplemented bit, read as ‘0’			
R = Readable bit	W = Writable bit	HS =Hardware Set	HC = Hardware Cleared
-n = Value at POR	‘1’ = Bit is set	‘0’ = Bit is cleared	x = Bit is unknown

bit 15, 13 **UTXISEL1:UTXISEL0:** Transmission Interrupt Mode Selection bits

11 =Reserved; do not use
10 =Interrupt when a character is transferred to the Transmit Shift Register and as a result, the transmit buffer becomes empty
01 =Interrupt when the last character is shifted out of the Transmit Shift Register; all transmit operations are completed
00 =Interrupt when a character is transferred to the Transmit Shift Register (this implies there is at least one character open in the transmit buffer)

bit 14 **UTXINV:** IrDA Encoder Transmit Polarity Inversion bit(1)

1 = IrDA encoded U1TX idle state is ‘1’
0 = IrDA encoded U1TX idle state is ‘0’

Note 1: Value of bit only affects the transmit properties of the module when the IrDA encoder is enabled (IREN = 1).

bit 12 **Unimplemented:** Read as ‘0’

bit 11 **UTXBRK:** Transmit Break bit

1 = Send Sync Break on next transmission – Start bit, followed by twelve ‘0’ bits, followed by Stop bit; cleared by hardware upon completion
0 = Sync Break transmission disabled or completed

bit 10 **UTXEN:** Transmit Enable bit

1 = Transmit enabled, U1TX pin controlled by UART1
0 = Transmit disabled, any pending transmission is aborted and buffer is reset. U1TX pin controlled by PORT.

bit 9 **UTXBF:** Transmit Buffer Full Status bit (Read-Only)

1 = Transmit buffer is full
0 = Transmit buffer is not full, at least one more character can be written

bit 8 **TRMT:** Transmit Shift Register Empty bit (Read-Only)

1 = Transmit Shift Register is empty and transmit buffer is empty (the last transmission has completed)
0 = Transmit Shift Register is not empty, a transmission is in progress or queued

bit 7-6 **URXISEL1:URXISEL0:** Receive Interrupt Mode Selection bits

11 =Interrupt is set on RSR transfer, making the receive buffer full (i.e., has 4 data characters)
10 =Interrupt is set on RSR transfer, making the receive buffer 3/4 full (i.e., has 3 data characters)
0x =Interrupt is set when any character is received and transferred from the RSR to the receive buffer. Receive buffer has one or more characters.

bit 5 **ADDEN:** Address Character Detect bit (bit 8 of received data = 1)

1 = Address Detect mode enabled. If 9-bit mode is not selected, this does not take effect.
0 = Address Detect mode disabled

© 2006-2014 Microchip Technology Inc.

REGISTER 15-2: U1STA: UART1 STATUS AND CONTROL REGISTER (CONTINUED)

bit 4 **RIDLE:** Receiver Idle bit (Read-Only)

1 = Receiver is Idle
0 = Receiver is active

bit 3 **PERR:** Parity Error Status bit (Read-Only)

1 = Parity error has been detected for the current character (character at the top of the receive FIFO)
0 = Parity error has not been detected

bit 2 **FERR:** Framing Error Status bit (Read-Only)

1 = Framing error has been detected for the current character (character at the top of the receive FIFO)
0 = Framing error has not been detected

bit 1 **OERR:** Receive Buffer Overrun Error Status bit (Read/Clear-Only)

1 = Receive buffer has overflowed
0 = Receive buffer has not overflowed (clearing a previously set OERR bit (1 → 0 transition) will reset the receiver buffer and the RSR to the empty state)

bit 0 **URXDA:** Receive Buffer Data Available bit (Read-Only)

1 = Receive buffer has data, at least one more character can be read
0 = Receive buffer is empty

TABLE 15-1: UART1 REGISTER MAP

SFR Name	SFR Addr	Bit 15	Bit 14	Bit 13	Bit 12	Bit 11	Bit 10	Bit 9	Bit 8	Bit 7	Bit 6	Bit 5	Bit 4	Bit 3	Bit 2	Bit 1	Bit 0	All Resets
U1MODE	0220	UARTEN	—	USIDL	IREN	—	ALTIO	—	—	WAKE	LPBACK	ABAUD	RXINV	BRGH	PDSEL<1:0>		STSEL	0000
U1STA	0222	UTXISEL1	UTXINV	UTXISEL0	—	UTXBRK	UTXEN	UTXBF	TRMT	URXISEL<1:0>		ADDEN	RIDLE	PERR	FERR	OERR	URXDA	0110
U1TXREG	0224	—	—	—	—	—	—	—	UART Transmit Register									xxxx
U1RXREG	0226	—	—	—	—	—	—	—	UART Receive Register									0000
U1BRG	0228	Baud Rate Generator Prescaler																0000

Legend: x = unknown value on Reset, — = unimplemented, read as '0'. Reset values are shown in hexadecimal.

© 2006-2014 Microchip Technology Inc.

16.0 10-BIT 2 Msps ANALOG-TO-DIGITAL CONVERTER (ADC) MODULE

The dsPIC30F1010/202X devices provide high-speed successive approximation analog to digital conversions to support applications such as AC/DC and DC/DC power converters.

16.1 Features

- 10-bit resolution
- Uni-polar Inputs
- Up to 12 input channels
- ±1 LSB accuracy
- Single supply operation
- 2000 ksps conversion rate at 5V
- 1000 ksps conversion rate at 3.0V
- Low power CMOS technology

16.2 Description

This ADC module is designed for applications that require low latency between the request for conversion and the resultant output data. Typical applications include:

- AC/DC power supplies
- DC/DC converters
- Power factor correction

This ADC works with the Power Supply PWM module in power control applications that require high-frequency control loops. This module can sample and convert two analog inputs in one microsecond. The one microsecond conversion delay reduces the “phase lag” between measurement and control system response.

Up to 4 inputs may be sampled at a time, and up to 12 inputs may request conversion at a time. If multiple inputs request conversion, the ADC will convert them in a sequential manner starting with the lowest order input.

This ADC design provides each pair of analog inputs (AN1,AN0), (AN3,AN2), ... , the ability to specify its own trigger source out of a maximum of sixteen different trigger sources. This capability allows this ADC to sample and convert analog inputs that are associated with PWM generators operating on independent time bases.

There is no operation during Sleep mode. The user applications typically require synchronization between analog data sampling and PWM output to the application circuit. The very high speed operation of this ADC module allows “data on demand”.

In addition, several hardware features have been added to the peripheral interface to improve real-time performance in a typical DSP based application.

1. Result alignment options
2. Automated sampling
3. External conversion start control

A block diagram of the ADC module is shown in Figure 16-1.

16.3 Module Functionality

The 10-bit 2 Msps ADC is designed to support power conversion applications when used with the Power Supply PWM module. The 10-bit 2 Msps ADC samples up to N ($N \leq 12$) inputs at a time and then converts two sampled inputs at a time. The quantity of sample and hold circuits is determined by a device’s requirements. The10-Bit 2 Msps ADC produces two 10-bit conversion results in 1 microsecond.

The ADC module supports up to 12 analog inputs. The sampled inputs are connected, via multiplexers, to the converter.

The analog reference voltage is defined as the device supply voltage (AV_{DD}/AV_{SS}).

The ADC module uses these Control and Status registers:

- A/D Control Register (ADCON)
- A/D Status Register (ADSTAT)
- A/D Base Register (ADBASE)
- A/D Port Configuration Register (ADPCFG)
- A/D Convert Pair Control Register 0 (ADCPC0)
- A/D Convert Pair Control Register 1 (ADCPC1)
- A/D Convert Pair Control Register 2 (ADCPC2)

The ADCON register controls the operation of the ADC module. The ADSTAT register displays the status of the conversion processes. The ADPCFG registers configure the port pins as analog inputs or as digital I/O. The CPC registers control the triggering of the ADC conversions. (See Register 16-1 through Register 16-7 for detailed bit configurations.)

Note: A unique feature of the ADC module is its ability to sample inputs in an asynchronous manner. Individual sample and hold circuits can be triggered independently of each other.

Note: The PLL must be enabled for the ADC module to function. This is achieved by using the FNOSC<1:0> bits in the FOSCSEL Configuration register.

FIGURE 16-1: ADC BLOCK DIAGRAM

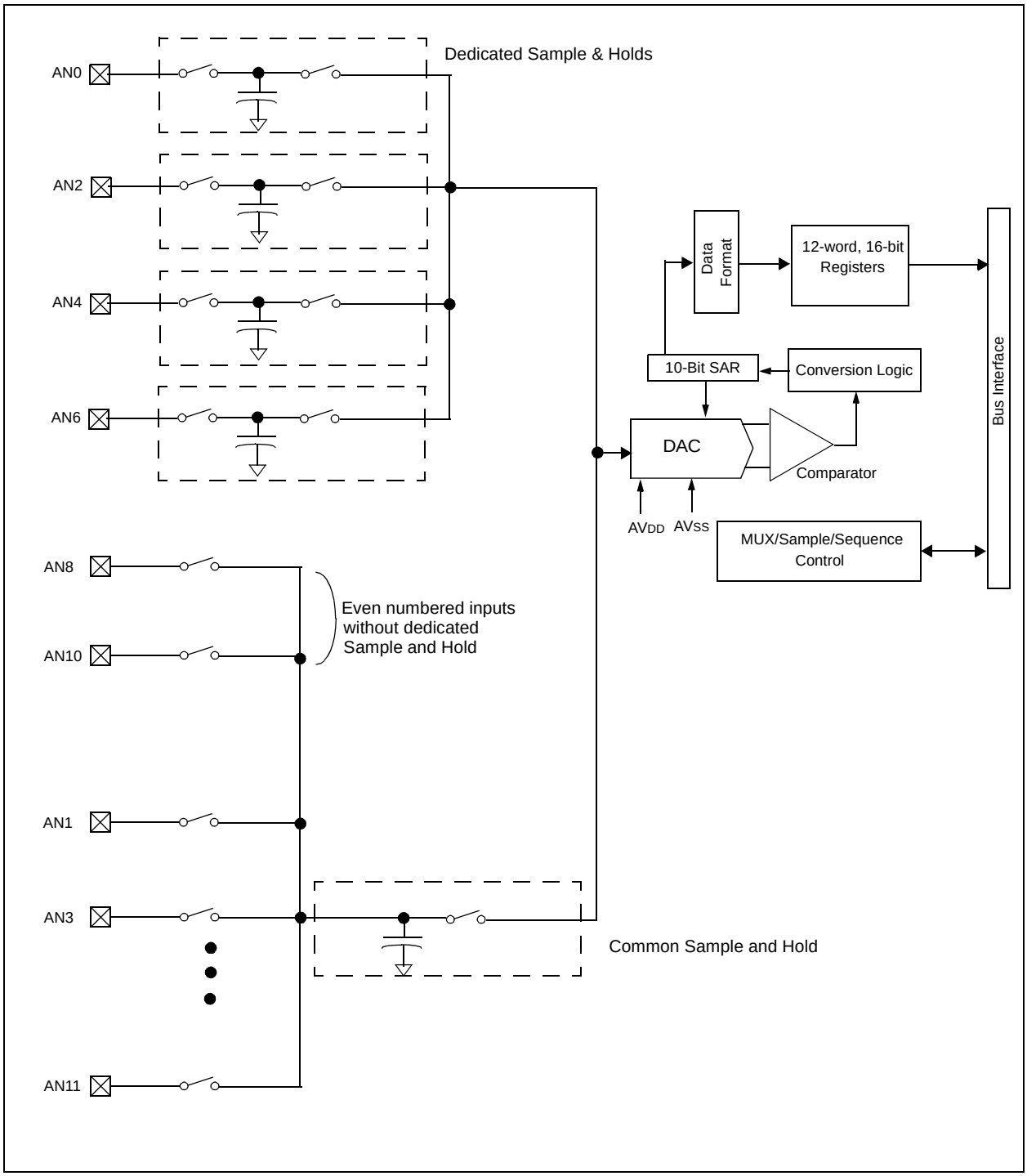

© 2006-2014 Microchip Technology Inc.

REGISTER 16-1: A/D CONTROL REGISTER (ADCON)

R/W-0	U-0	R/W-0	U-0	U-0	R/W-0	U-0	R/W-0
ADON	—	ADSIDL	—	—	GSWTRG	—	FORM
bit 15							bit 8

R/W-0	R/W-0	R/W-0	U-0	U-0	R/W-0	R/W-1	R/W-1
EIE	ORDER	SEQSAMP	—	—	ADCS<2:0>		
bit 7							bit 0

Legend:			
R = Readable bit	W = Writable bit	U = Unimplemented bit, read as ‘0’	
-n = Value at POR	‘1’ = Bit is set	‘0’ = Bit is cleared	x = Bit is unknown

bit 15 **ADON:** A/D Operating Mode bit
1 = A/D converter module is operating
0 = A/D converter is off

bit 14 **Unimplemented:** Read as ‘0’

bit 13 **ADSIDL:** Stop in Idle Mode bit
1 = Discontinue module operation when device enters Idle mode
0 = Continue module operation in Idle mode

bit 12-11 **Unimplemented:** Read as ‘0’

bit 10 **GSWTRG:** Global Software Trigger bit
When this bit is set by the user, it will trigger conversions if selected by the TRGSRC<4:0> bits in the ADCPCx registers. This bit must be cleared by the user prior to initiating another global trigger (i.e., this bit is not auto-clearing).

bit 9 **Unimplemented:** Read as ‘0’

bit 8 **FORM:** Data Output Format bit
1 = Fractional (DOUT = dddd dddd dd00 0000)
0 = Integer (DOUT = 0000 00dd dddd dddd)

bit 7 **EIE:** Early Interrupt Enable bit
1 = Interrupt is generated after first conversion is completed
0 = Interrupt is generated after second conversion is completed
Note: This control bit can only be changed while ADC is disabled (ADON = 0).

bit 6 **ORDER:** Conversion Order bit
1 = Odd numbered analog input is converted first, followed by conversion of even numbered input
0 = Even numbered analog input is converted first, followed by conversion of odd numbered input
Note: This control bit can only be changed while ADC is disabled (ADON = 0).

bit 5 **SEQSAMP:** Sequential Sample Enable.
1 = Shared S&H is sampled at the start of the second conversion if ORDER = 0. If ORDER = 1, then the shared S&H is sampled at the start of the first conversion.
0 = Shared S&H is sampled at the same time the dedicated S&H is sampled if the shared S&H is not currently busy with an existing conversion process. If the shared S&H is busy at the time the dedicated S&H is sampled, then the shared S&H will sample at the start of the new conversion cycle

bit 4-3 **Unimplemented:** Read as ‘0’

REGISTER 16-1: A/D CONTROL REGISTER (ADCON) (CONTINUED)

bit 2-0 **ADCS<2:0>:** A/D Conversion Clock Divider Select bits

If PLL is enabled (assume 15 MHz external clock as clock source):
111 = FADC/18 = 13.3 MHz @ 30 MIPS
110 = FADC/16 = 15.0 MHz @ 30 MIPS
101 = FADC/14 = 17.1 MHz @ 30 MIPS
100 = FADC/12 = 20.0 MHz @ 30 MIPS
011 = FADC/10 = 24.0 MHz @ 30 MIPS
010 = FADC/8 = 30.0 MHz @ 30 MIPS
001 = FADC/6 = Reserved, defaults to 30 MHz @ 30 MIPS
000 = FADC/4 = Reserved, defaults to 30 MHz @ 30 MIPS

If PLL is disabled (assume 15 MHz external clock as clock source):
111 = FADC/18 = 0.83 MHz @ 7.5 MIPS
110 = FADC/16 = 0.93 MHz @ 7.5 MIPS
101 = FADC/14 = 1.07 MHz @ 7.5 MIPS
100 = FADC/12 = 1.25 MHz @ 7.5 MIPS
011 = FADC/10 = 1.5 MHz @ 7.5 MIPS
010 = FADC/8 = 1.87 MHz @ 7.5 MIPS
001 = FADC/6 = 2.5 MHz @ 7.5 MIPS
000 = FADC/4 = 3.75 MHz @ 7.5 MIPS

Note: See Figure 18-2 for ADC clock derivation.

© 2006-2014 Microchip Technology Inc.

REGISTER 16-2: A/D STATUS REGISTER (ADSTAT)

U-0	U-0	U-0	U-0	U-0	U-0	U-0	U-0
—	—	—	—	—	—	—	—
bit 15							bit 8

U-0	U-0	R/C-0 H-S	R/C-0 H-S	R/C-0 H-S	R/C-0 H-S	R/C-0 H-S	R/C-0 H-S
—	—	P5RDY	P4RDY	P3RDY	P2RDY	P1RDY	P0RDY
bit 7							bit 0

Legend:			
R = Readable bit	W = Writable bit	U = Unimplemented bit, read as ‘0’	
-n = Value at POR	‘1’ = Bit is set	‘0’ = Bit is cleared	x = Bit is unknown
C = Clear in software	H-S = Set by hardware		

bit 15-6 **Unimplemented:** Read as ‘0’

bit 5 **P5RDY:** Conversion Data for Pair #5 Ready bit
Bit set when data is ready in buffer, cleared when a ‘0’ is written to this bit.

bit 4 **P4RDY:** Conversion Data for Pair #4 Ready bit
Bit set when data is ready in buffer, cleared when a ‘0’ is written to this bit.

bit 3 **P3RDY:** Conversion Data for Pair #3 Ready bit
Bit set when data is ready in buffer, cleared when a ‘0’ is written to this bit.

bit 2 **P2RDY:** Conversion Data for Pair #2 Ready bit
Bit set when data is ready in buffer, cleared when a ‘0’ is written to this bit.

bit 1 **P1RDY:** Conversion Data for Pair #1 Ready bit
Bit set when data is ready in buffer, cleared when a ‘0’ is written to this bit.

bit 0 **P0RDY:** Conversion Data for Pair #0 Ready bit
Bit set when data is ready in buffer, cleared when a ‘0’ is written to this bit.

REGISTER 16-3: A/D BASE REGISTER (ADBASE)

R/W-0	R/W-0	R/W-0	R/W-0	R/W-0	R/W-0	R/W-0	R/W-0
ADBASE<15:8>							
bit 15							bit 8

R/W-0	R/W-0	R/W-0	R/W-0	R/W-0	R/W-0	R/W-0	U-0
ADBASE<7:1>							—
bit 7							bit 0

Legend:			
R = Readable bit	W = Writable bit	U = Unimplemented bit, read as ‘0’	
-n = Value at POR	‘1’ = Bit is set	‘0’ = Bit is cleared	x = Bit is unknown

bit 15-1 **ADC Base Register:** This register contains the base address of the user’s ADC Interrupt Service Routine jump table. This register, when read, contains the sum of the ADBASE register contents and the encoded value of the PxRDY Status bits.

The encoder logic provides the bit number of the highest priority PxRDY bits where P0RDY is the highest priority, and P5RDY is lowest priority.

Note: The encoding results are shifted left two bits so bits 1-0 of the result are always zero.

bit 0 **Unimplemented:** Read as ‘0’

Note: As an alternative to using the ADBASE Register, the ADCP0-5 ADC Pair Conversion Complete Interrupts (Interrupts 37-42) can be used to invoke A to D conversion completion routines for individual ADC input pairs. Refer to **Section 16.9 “Individual Pair Interrupts”**.

REGISTER 16-4: A/D PORT CONFIGURATION REGISTER (ADPCFG)

U-0	U-0	U-0	U-0	R/W-0	R/W-0	R/W-0	R/W-0
—	—	—	—	PCFG11	PCFG10	PCFG9	PCFG8
bit 15							bit 8

R/W-0	R/W-0	R/W-0	R/W-0	R/W-0	R/W-0	R/W-0	R/W-0
PCFG7	PCFG6	PCFG5	PCFG4	PCFG3	PCFG2	PCFG1	PCFG0
bit 7							bit 0

Legend:			
R = Readable bit	W = Writable bit	U = Unimplemented bit, read as ‘0’	
-n = Value at POR	‘1’ = Bit is set	‘0’ = Bit is cleared	x = Bit is unknown

bit 15-12 **Unimplemented:** Read as ‘0’

bit 11-0 **PCFG<11:0>:** A/D Port Configuration Control bits

1 = Port pin in Digital mode, port read input enabled, A/D input multiplexor connected to AVSS

0 = Port pin in Analog mode, port read input disabled, A/D samples pin voltage

© 2006-2014 Microchip Technology Inc.

REGISTER 16-5: A/D CONVERT PAIR CONTROL REGISTER 0 (ADCPC0)

R/W-0	R/W-0	R/W-0	R/W-0	R/W-0	R/W-0	R/W-0	R/W-0
IRQEN1	PEND1	SWTRG1	TRGSRC1<4:0>				
bit 15							bit 8

R/W-0	R/W-0	R/W-0	R/W-0	R/W-0	R/W-0	R/W-0	R/W-0
IRQEN0	PEND0	SWTRG0	TRGSRC0<4:0>				
bit 7							bit 0

Legend:			
R = Readable bit	W = Writable bit	U = Unimplemented bit, read as ‘0’	
-n = Value at POR	‘1’ = Bit is set	‘0’ = Bit is cleared	x = Bit is unknown

bit 15 **IRQEN1:** Interrupt Request Enable 1 bit
1 = Enable IRQ generation when requested conversion of channels AN3 and AN2 is completed
0 = IRQ is not generated

bit 14 **PEND1:** Pending Conversion Status 1 bit
1 = Conversion of channels AN3 and AN2 is pending. Set when selected trigger is asserted
0 = Conversion is complete

bit 13 **SWTRG1:** Software Trigger 1 bit
1 = Start conversion of AN3 and AN2 (if selected in TRGSRC bits). If other conversions are in progress, then conversion will be performed when the conversion resources are available. This bit will be reset when the PEND bit is set.

bit 12-8 **TRGSRC1<4:0>:** Trigger 1 Source Selection bits
Selects trigger source for conversion of analog channels AN3 and AN2.
00000 = No conversion enabled
00001 = Individual software trigger selected
00010 = Global software trigger selected
00011 = PWM Special Event Trigger selected
00100 = PWM generator #1 trigger selected
00101 = PWM generator #2 trigger selected
00110 = PWM generator #3 trigger selected
00111 = PWM generator #4 trigger selected
01100 = Timer #1 period match
01101 = Timer #2 period match
01110 = PWM GEN #1 current-limit ADC trigger
01111 = PWM GEN #2 current-limit ADC trigger
10000 = PWM GEN #3 current-limit ADC trigger
10001 = PWM GEN #4 current-limit ADC trigger
10110 = PWM GEN #1 fault ADC trigger
10111 = PWM GEN #2 fault ADC trigger
11000 = PWM GEN #3 fault ADC trigger
11001 = PWM GEN #4 fault ADC trigger

bit 7 **IRQEN0:** Interrupt Request Enable 0 bit
1 = Enable IRQ generation when requested conversion of channels AN1 and AN0 is completed
0 = IRQ is not generated

bit 6 **PEND0:** Pending Conversion Status 0 bit
1 = Conversion of channels AN1 and AN0 is pending. Set when selected trigger is asserted.
0 = Conversion is complete

bit 5 **SWTRG0:** Software Trigger 0 bit
1 = Start conversion of AN1 and AN0 (if selected by TRGSRC bits). If other conversions are in progress, then conversion will be performed when the conversion resources are available. This bit will be reset when the PEND bit is set

REGISTER 16-5: A/D CONVERT PAIR CONTROL REGISTER 0 (ADCPC0) (CONTINUED)

bit 4-0 **TRGSRC0<4:0>:** Trigger 0 Source Selection bits
Selects trigger source for conversion of analog channels AN1 and AN0.
`00000` = No conversion enabled
`00001` = Individual software trigger selected
`00010` = Global software trigger selected
`00011` = PWM Special Event Trigger selected
`00100` = PWM generator #1 trigger selected
`00101` = PWM generator #2 trigger selected
`00110` = PWM generator #3 trigger selected
`00111` = PWM generator #4 trigger selected
`01100` = Timer #1 period match
`01101` = Timer #2 period match
`01110` = PWM GEN #1 current-limit ADC trigger
`01111` = PWM GEN #2 current-limit ADC trigger
`10000` = PWM GEN #3 current-limit ADC trigger
`10001` = PWM GEN #4 current-limit ADC trigger
`10110` = PWM GEN #1 fault ADC trigger
`10111` = PWM GEN #2 fault ADC trigger
`11000` = PWM GEN #3 fault ADC trigger
`11001` = PWM GEN #4 fault ADC trigger

© 2006-2014 Microchip Technology Inc.

REGISTER 16-6: A/D CONVERT PAIR CONTROL REGISTER 1 (ADCPC1)

R/W-0	R/W-0	R/W-0	R/W-0	R/W-0	R/W-0	R/W-0	R/W-0
IRQEN3	PEND3	SWTRG3	TRGSRC3<4:0>				
bit 15							bit 8

R/W-0	R/W-0	R/W-0	R/W-0	R/W-0	R/W-0	R/W-0	R/W-0
IRQEN2	PEND2	SWTRG2	TRGSRC2<4:0>				
bit 7							bit 0

Legend:			
R = Readable bit	W = Writable bit	U = Unimplemented bit, read as ‘0’	
-n = Value at POR	‘1’ = Bit is set	‘0’ = Bit is cleared	x = Bit is unknown

bit 15 **IRQEN3:** Interrupt Request Enable 3 bit
1 = Enable IRQ generation when requested conversion of channels AN7 and AN6 is completed.
0 = IRQ is not generated

bit 14 **PEND3:** Pending Conversion Status 3 bit
1 = Conversion of channels AN7 and AN6 is pending. Set when selected trigger is asserted.
0 = Conversion is complete

bit 13 **SWTRG3:** Software Trigger 3 bit
1 = Start conversion of AN7 and AN6 (if selected by TRGSRC bits). If other conversions are in progress, then conversion will be performed when the conversion resources are available. This bit will be reset when the PEND bit is set.

bit 12-8 **TRGSRC3<4:0>:** Trigger 3 Source Selection bits
Selects trigger source for conversion of analog channels A7 and A6.
00000 = No conversion enabled
00001 = Individual software trigger selected
00010 = Global software trigger selected
00011 = PWM Special Event Trigger selected
00100 = PWM generator #1 trigger selected
00101 = PWM generator #2 trigger selected
00110 = PWM generator #3 trigger selected
00111 = PWM generator #4 trigger selected
01100 = Timer #1 period match
01101 = Timer #2 period match
01110 = PWM GEN #1 current-limit ADC trigger
01111 = PWM GEN #2 current-limit ADC trigger
10000 = PWM GEN #3 current-limit ADC trigger
10001 = PWM GEN #4 current-limit ADC trigger
10110 = PWM GEN #1 fault ADC trigger
10111 = PWM GEN #2 fault ADC trigger
11000 = PWM GEN #3 fault ADC trigger
11001 = PWM GEN #4 fault ADC trigger

bit 7 **IRQEN2:** Interrupt Request Enable 2 bit
1 = Enable IRQ generation when requested conversion of channels AN5 and AN4 is completed
0 = IRQ is not generated

bit 6 **PEND2:** Pending Conversion Status 2 bit
1 = Conversion of channels AN5 and AN4 is pending. Set when selected trigger is asserted
0 = Conversion is complete

bit 5 **SWTRG2:** Software Trigger 2 bit
1 = Start conversion of AN5 and AN4 (if selected by TRGSRC bits). If other conversions are in progress, then conversion will be performed when the conversion resources are available. This bit will be reset when the PEND bit is set

REGISTER 16-6: A/D CONVERT PAIR CONTROL REGISTER 1 (ADCPC1) (CONTINUED)

bit 4-0 **TRGSRC2<4:0>:** Trigger 2 Source Selection bits
Selects trigger source for conversion of analog channels: AN5 and AN4
`00000` = No conversion enabled
`00001` = Individual software trigger selected
`00010` = Global software trigger selected
`00011` = PWM Special Event Trigger selected
`00100` = PWM generator #1 trigger selected
`00101` = PWM generator #2 trigger selected
`00110` = PWM generator #3 trigger selected
`00111` = PWM generator #4 trigger selected
`01100` = Timer #1 period match
`01101` = Timer #2 period match
`01110` = PWM GEN #1 current-limit ADC trigger
`01111` = PWM GEN #2 current-limit ADC trigger
`10000` = PWM GEN #3 current-limit ADC trigger
`10001` = PWM GEN #4 current-limit ADC trigger
`10110` = PWM GEN #1 fault ADC trigger
`10111` = PWM GEN #2 fault ADC trigger
`11000` = PWM GEN #3 fault ADC trigger
`11001` = PWM GEN #4 fault ADC trigger

© 2006-2014 Microchip Technology Inc.

REGISTER 16-7: A/D CONVERT PAIR CONTROL REGISTER 2 (ADCPC2)

R/W-0	R/W-0	R/W-0	R/W-0	R/W-0	R/W-0	R/W-0	R/W-0
IRQEN5	PEND5	SWTRG5	TRGSRC5<4:0>				
bit 15							bit 8

R/W-0	R/W-0	R/W-0	R/W-0	R/W-0	R/W-0	R/W-0	R/W-0
IRQEN4	PEND4	SWTRG4	TRGSRC4<4:0>				
bit 7							bit 0

Legend:			
R = Readable bit	W = Writable bit	U = Unimplemented bit, read as ‘0’	
-n = Value at POR	‘1’ = Bit is set	‘0’ = Bit is cleared	x = Bit is unknown

bit 15 **IRQEN5:** Interrupt Request Enable 5 bit
1 = Enable IRQ generation when requested conversion of channels AN11 and AN10 is completed
0 = IRQ is not generated

bit 14 **PEND5:** Pending Conversion Status 5 bit
1 = Conversion of channels AN11 and AN10 is pending. Set when selected trigger is asserted
0 = Conversion is complete

bit 13 **SWTRG5:** Software Trigger 5 bit
1 = Start conversion of AN11 and AN10 (if selected by TRGSRC bits). If other conversions are in progress, then conversion will be performed when the conversion resources are available. This bit will be reset when the PEND bit is set.

bit 12-8 **TRGSRC5<4:0>:** Trigger Source Selection 5 bits
Selects trigger source for conversion of analog channels A11 and A10.
00000 = No conversion enabled
00001 = Individual software trigger selected
00010 = Global software trigger selected
00011 = PWM Special Event Trigger selected
00100 = PWM generator #1 trigger selected
00101 = PWM generator #2 trigger selected
00110 = PWM generator #3 trigger selected
00111 = PWM generator #4 trigger selected
01100 = Timer #1 period match
01101 = Timer #2 period match
01110 = PWM GEN #1 current-limit ADC trigger
01111 = PWM GEN #2 current-limit ADC trigger
10000 = PWM GEN #3 current-limit ADC trigger
10001 = PWM GEN #4 current-limit ADC trigger
10110 = PWM GEN #1 fault ADC trigger
10111 = PWM GEN #2 fault ADC trigger
11000 = PWM GEN #3 fault ADC trigger
11001 = PWM GEN #4 fault ADC trigger

bit 7 **IRQEN4:** Interrupt Request Enable 4 bit
1 = Enable IRQ generation when requested conversion of channels AN9 and AN8 is completed
0 = IRQ is not generated

bit 6 **PEND4:** Pending Conversion Status 4 bit
1 = Conversion of channels AN9 and AN8 is pending. Set when selected trigger is asserted.
0 = Conversion is complete

bit 5 **SWTRG4:** Software Trigger 4 bit
1 = Start conversion of AN9 and AN8 (if selected by TRGSRC bits). If other conversions are in progress, then conversion will be performed when the conversion resources are available. This bit will be reset when the PEND bit is set.

REGISTER 16-7: A/D CONVERT PAIR CONTROL REGISTER 2 (ADCPC2) (CONTINUED)

bit 4-0 **TRGSRC4<4:0>:** Trigger Source Selection 4 bits
Selects trigger source for conversion of analog channels: AN9 and AN8

`00000` = No conversion enabled
`00001` = Individual software trigger selected
`00010` = Global software trigger selected
`00011` = PWM Special Event Trigger selected
`00100` = PWM generator #1 trigger selected
`00101` = PWM generator #2 trigger selected
`00110` = PWM generator #3 trigger selected
`00111` = PWM generator #4 trigger selected
`01100` = Timer #1 period match
`01101` = Timer #2 period match
`01110` = PWM GEN #1 current-limit ADC trigger
`01111` = PWM GEN #2 current-limit ADC trigger
`10000` = PWM GEN #3 current-limit ADC trigger
`10001` = PWM GEN #4 current-limit ADC trigger
`10110` = PWM GEN #1 fault ADC trigger
`10111` = PWM GEN #2 fault ADC trigger
`11000` = PWM GEN #3 fault ADC trigger
`11001` = PWM GEN #4 fault ADC trigger

© 2006-2014 Microchip Technology Inc.

16.4 ADC Result Buffer

The ADC module contains up to 12 data output registers to store the A/D results called ADCBUF<11:0>. The registers are 10 bits wide, but are read into different format, 16-bit words. The buffers are read-only.

Each analog input has a corresponding data output register.

This module DOES NOT include a circular data buffer or FIFO. Because the conversion results may be produced in any order, such schemes will not work since there would be no means to determine which data is in a specific location.

The SAR write to the buffers is synchronous to the ADC clock. Reads from the buffers will always have valid data assuming that the data-ready interrupt has been processed.

If a buffer location has not been read by the software and the SAR needs to overwrite that location, the previous data is lost.

Reads from the result buffer pass through the data formatter. The 10 bits of the result data are formatted into a 16-bit word.

16.5 Application Information

The ADC module implements a concept based on “Conversion Pairs”. In power conversion applications, there is a need to measure voltages and currents for each PWM control loop. The ADC module enables the sample and conversion process of each conversion pair to be precisely timed relative to the PWM signals.

In a user’s application circuit, the PWM signal enables a transistor, which allows an inductor to charge up with current to a desired value. The longer a PWM signal is on, the longer the inductor is charging, and therefore the inductor current is at its maximum at the end of the PWM signal. Often, this is the point where the user wants to take the current and voltage measurements.

Figure 16-2 shows a typical power conversion application (a boost converter) where the current sensing of the inductor is done by monitoring the voltage across a resistor in series with the power transistor that “charges” the inductor. The significant feature of this figure is that if the sampling of the resistor voltage occurs slightly later than the desired sample point, the data read will be zero. This is not acceptable in most applications. The ADC module always samples the analog voltages at the appointed time regardless of whether the ADC converter is busy or not.

The Power Supply PWM module supports 2-4 independent PWM channels as well as 2-4 trigger signals (one per PWM generator). The user can configure these channels to initiate an ADC conversion of a selected input pair at the proper time in the PWM cycle. The Power Supply PWM module also provides an additional trigger signal (Special Event Trigger), which can be programmed to occur at a specified time during the primary time base count cycle.

FIGURE 16-2: APPLICATION EXAMPLE: IMPORTANCE OF PRECISE SAMPLING

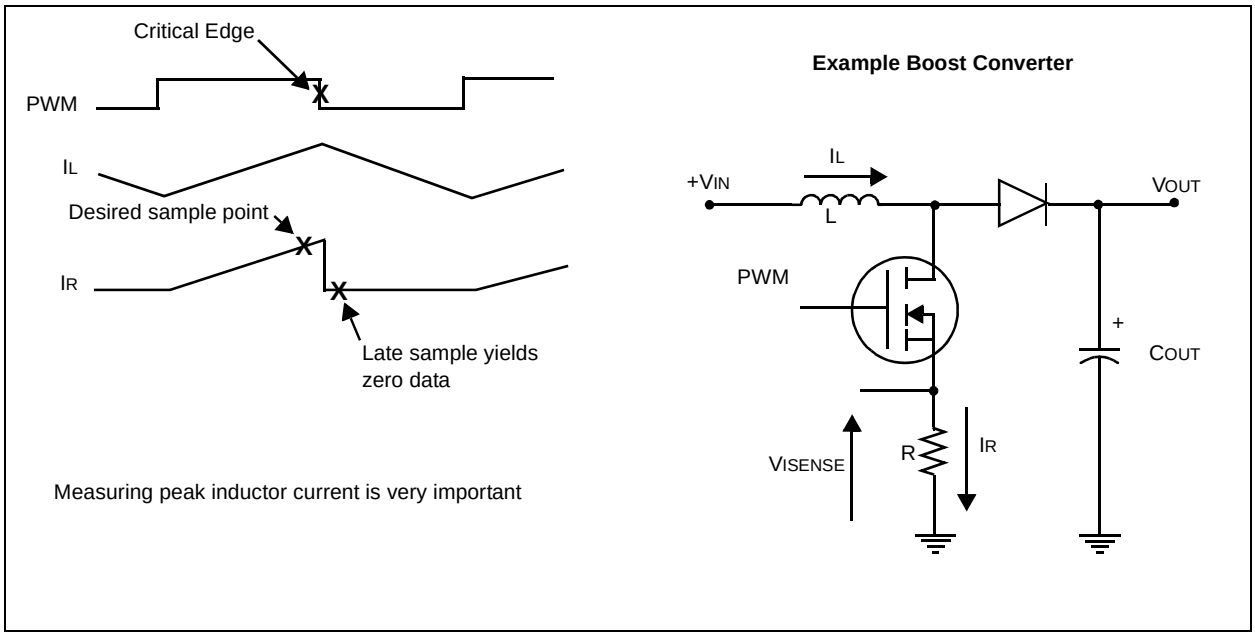

16.6 Reverse Conversion Order

The ORDER control bit in the ADCON register, when set, reverses the order of the input pair conversion process. Normally (ORDER = 0), the even numbered input of an input pair is converted first and then the odd numbered input is converted. If ORDER = 1, the odd numbered input pin of an input pair is converted first, followed by the even numbered pin.

This feature is useful when using voltage control modes and using the early interrupt capability (EIE = 1). These features enable the user to minimize the time period from actual acquisition of the feedback (ADC) data to the update of the control output (PWM). This time from input to output of the control system determines the overall stability of the control system.

16.7 Simultaneous and Sequential Sampling in a pair

The inputs that have dedicated Sample and Hold (S&H) circuits are sampled when their specified trigger events occur. The inputs that share the common sample and hold circuit are sampled in the following manner:

1. If the SEQSAMP bit = 0, and the common (shared) sample and hold circuit is NOT busy, then the shared S&H will sample their specified input at the same time as the dedicated S&H. This action provides “Simultaneous” sample and hold functionality.
2. If the SEQSAMP bit = 0, and the shared S&H is currently busy with a conversion in progress, then the shared S&H will sample as soon as possible (at the start of the new conversion process for the pair).
3. If the SEQSAMP bit = 1, then the shared S&H will sample at the start of the conversion process for that input. For example: If the ORDER bit = 0 the shared S&H will sample at the start of the conversion of the second input. If ORDER = 1, then the shared S&H will sample at the start of the conversion for the first input.

   The SEQSAMP bit is useful for some applications that want to minimize the time from a sample event to the conversion of the sample.

   When SEQSAMP = 0, the logic attempts to take the samples for both inputs of a pair at the same time if the resources are available. The user can often ensure that the ADC will not be busy with a prior conversion by controlling the timing of the trigger signals that initiate the conversion processes.

16.8 Group Interrupt Generation

The ADC module provides a common or “Group” interrupt request that is the OR of all of the enabled interrupt sources within the module. Each CPC register has two IRQENx bits, one for each analog input pair. If the IRQEN bit is set, an interrupt request is made to the interrupt controller when the requested conversion is completed. When an interrupt is generated, an associated PxRDY bit in the ADSTAT register is set. The PxRDY bit is cleared by the user. The user’s software can examine the ADSTAT register’s PxRDY bits to determine if additional requested conversions have been completed.

The group interrupt is useful for applications that use a common software routine to process ADC interrupts for multiple analog input pairs. This method is more traditional in concept.

Note:	The user must clear the IFS bit associated with the ADC in the interrupt controller before the PxRDY bit is cleared. Failure to do so may cause interrupts to be lost. The reason is that the ADC will possibly have another interrupt pending. If the user clears the PxRDY bit first, the ADC may generate another interrupt request, but if the user then clears the IFS bit, the interrupt request will be erased.

© 2006-2014 Microchip Technology Inc.

16.9 Individual Pair Interrupts

The ADC module also provides individual interrupts outputs for each analog input pair. These interrupts are always enabled within the module. The pair interrupts can be individually enabled or disabled via the associated interrupt enable bits in the IEC registers.

Using the group interrupts may require the interrupt service routine to determine which interrupt source generated the interrupt. For applications that use separate software tasks to process ADC data, a common interrupt vector can cause performance bottlenecks.

The use of the individual pair interrupts can save many clock cycles compared to using the group interrupt to process multiple interrupt sources. The individual pair interrupts support the construction of application software that is responsive and organized on a task basis.

Regardless of whether an individual pair interrupt or the global interrupt are used to respond to an interrupt request from an ADC conversion, the PxRDY bits in the ADSTAT register function in the same manner.

The use of the individual pair interrupts also enables the user to change the interrupt priority of individual ADC channels (pairs) as compared to the fixed priority structure of the group interrupt.

NOTE: The use of individual interrupts DOES NOT affect the priority structure of the ADC with respect to the order of input pair conversion.

The use of individual interrupts can reduce the problem of accidently “losing” a pending interrupt while processing and clearing a current interrupt

16.10 Early Interrupt Generation

The EIE control bit in the ADCON register enables the generation of the interrupts after completion of the first conversion instead of waiting for the completion of both inputs of an input pair. Even though the second input will still be in the conversion process, the software can be written to perform some of the computations using the first data value while the second conversion is completed.

The user software can be written to account for the 500 nsec conversion period of the second input before using the second data, or the user can poll the PEND bit in the ADCPCx register.

The PEND bit remains set until both conversions of a pair have been completed. The PxRDY bit for the associated interrupt is set in the ADSTAT register at the completion of the first conversion, and remains set until it is cleared by the user.

16.11 Conflict Resolution

If more than one conversion pair request is active at the same time, the ADC control logic processes the requests in a top-down manner, starting at analog pair #0 (AN1/AN0) and ending at analog pair #5 (AN11/AN10). This is not a “round-robin” process.

16.12 Deliberate Conflicts

If the user specifies the same conversion trigger source for multiple “conversion pairs”, then the ADC module functions like other dsPIC30F ADC modules; i.e., it processes the requested conversions sequentially (in pairs) until the sequence has been completed.

Note:	The ADC module will NOT repeatedly loop once triggered. Each sequence of conversions requires a trigger or multiple triggers.

16.13 ADC Clock Selection

The ADCS<2:0> bits in the ADCON register specify the clock divisor value for the ADC clock generation logic. The input to the ADC clock divisor is the system clock (240 MHz @ 30 MIPS) when the PLL is operating. This high-frequency clock provides the needed timing resolution to generate a 24 MHz ADC clock signal required to process two ADC conversions in 1 microsecond.

16.14 ADC Base Register

It is expected that the user application may have the ADC module generate 500,000 interrupts per second. To speed the evaluation of the PxRDY bits in the ADSTAT register, the ADC module features the read/write register: ADBASE. When read, the ADBASE register provides a sum of the contents of the ADBASE register plus an encoding of the PxRDY bits set in the ADSTAT register.

The Least Significant bit of the ADBASE register is forced to zero, which ensures that all (ADBASE + PxRDY) results are on instruction boundaries.

The PxRDY bits are binary priority encoded; P0RDY is the highest priority and P5RDY is the lowest priority. The encoded priority result is shifted left two bit positions and added to the contents of the ADBASE register. Thus the priority encoding yields addresses that are on two instruction word boundaries.

The user will typically load the ADBASE register with the base address of a “Jump” table that contains either the addresses of the appropriate ISRs or branches to the appropriate ISR. The encoded PxRDY values are set up to reserve two instruction words per entry in the Jump table. It is expected that the user software will use one instruction word to load an identifier into a W register, and the other instruction will be a branch to the appropriate ISR.

Example 16-1 shows a code sequence for using the ADBASE register to implement ADC Input Pair Interrupt Handling. When the ADBASE register is read, it contains the sum of the base address of the jump table and the encoded ADC channel pair number left shifted by 2 bits.

For example, if ADBASE is initialized with a value of 0x0360, a channel pair 1 interrupt would cause an ADBASE read value of 0x0364 (0x360 + 0b00000100). A channel pair 3 interrupt would cause an ADBASE read value of 0x036C (0x360 + 0b00001100).

EXAMPLE 16-1: ADC BASE REGISTER CODE

```
; Initialize and enable the ADC interrupt

   MOV    #handle(JMP_TBL),W0     ; Load the base address of the ISR Jump
   MOVWO, ADBASE                  ; table in ADBASE.

   BSET   IPC2,#12                ; Set up the interrupt priority
   BSET   IPC2,#13
   BSET   IPC2,#14

   BCLR   IFS0,#11                ; Clear any pending interrupts
   BCLR   ADSTAT                  ; Clear the ADC pair interrupts as well

   BSET   IEC0,#11                ; Enable the interrupt

; Code to Initialize the rest of the ADC registers

   ...
   ...
   ...

; ADC Interrupt Handler

__ADCInterrupt:

   PUSH.S                         ; Save WO-W3 and SR registers

   BCLR   IFSO,#11                ; Clear the interrupt
   MOV    ADBASE, W0              ; ADBASE contains the encoded jump address
   GOTO   W0                      ; within JMP_TBL

; Here's the Jump Table
; Note: It is important to clear the individual IRQ flags in the ADC AFTER the IRQ flags
in the interrupt controller. Failure to do so may cause interrupt requests to be lost

JMP_TBL:

   BCLR   ADSTAT,#0               ; Clear the IRQ flag in the ADC
   BRA    ADC_PAIR0_PROC          ; Actual Pair 0 Conversion Interrupt Handler

   BCLR   ADSTAT,#1               ; Clear the IRQ flag in the ADC
   BRA    ADC_PAIR1_PROC          ; Actual Pair 1 Conversion Interrupt Handler

   BCLR   ADSTAT,#2               ; Clear the IRQ flag in the ADC
   BRA    ADC_PAIR2_PROC             ; Actual Pair 2 Conversion Interrupt Handler

   BCLR   ADSTAT,#3               ; Clear the IRQ flag in the ADC
   BRA    ADC_PAIR3_PROC          ; Actual Pair 3 Conversion Interrupt Handler

   BCLR   ADSTAT,#4               ; Clear the IRQ flag in the ADC
   BRA    ADC_PAIR4_PROC          ; Actual Pair 4 Conversion Interrupt Handler
```


© 2006-2014 Microchip Technology Inc.

EXAMPLE 16-1: ADC BASE REGISTER CODE (CONTINUED)

```
; The actual pair conversion interrupt handler
; Don't forget to pop the stack when done and return from interrupt

ADC_PAIR0_PROC:

   ...                      ; The ADC pair 0 conversion complete handler
   POP.S                    ; Restore W0-W3 and SR registers
   RETFIE                   ; Return from Interrupt

ADC_PAIR1_PROC:

   ...                      ; The ADC pair 1 conversion complete handler
   POP.S                    ; Restore W0-W3 and SR registers
   RETFIE                   ; Return from Interrupt

ADC_PAIR2_PROC:

   ...                      ; The ADC pair 2 conversion complete handler
   POP.S                    ; Restore W0-W3 and SR registers
   RETFIE                   ; Return from Interrupt

ADC_PAIR3_PROC:

   ...                      ; The ADC pair 3 conversion complete handler
   POP.S                    ; Restore W0-W3 and SR registers
   RETFIE                   ; Return from Interrupt

ADC_PAIR4_PROC:

   ...                      ; The ADC pair 4 conversion complete handler
   POP.S                    ; Restore W0-W3 and SR registers
   RETFIE                   ; Return from Interrupt

ADC_PAIR5_PROC:

   ...                      ; The ADC pair 5 conversion complete handler
   POP.S                    ; Restore W0-W3 and SR registers
   RETFIE                   ; Return from Interrupt
```

16.15 Changing A/D Clock

In general, the ADC cannot accept changes to the ADC clock divisor while ADON = 1. If the user makes A/D clock changes while ADON = 1, the results will be indeterminate.

16.16 Sample and Conversion

The ADC module always assigns two ADC clock periods for the sampling process. When operating at the maximum conversion rate of 2 Msps per channel, the sampling period is:

2 x 41.6 nsec = 83.3 nsec.

Each ADC pair specified in the ADCPCx registers initiates a sample operation when the selected trigger event occurs. The conversion of the sampled analog data occurs as resources become available.

If a new trigger event occurs for a specific channel before a previous sample and convert request for that channel has been processed, the newer request is ignored. It is the user's responsibility not to exceed the conversion rate capability for the module.

The actual conversion process requires 10 additional ADC clocks. The conversion is processed serially, bit 9 first, then bit 8, down to bit 0. The result is stored when the conversion is completed.

16.17 A/D Sample and Convert Timing

The sample and hold circuits assigned to the input pins have their own timing logic that is triggered when an external sample and convert request (from PWM or TMR) is made. The sample and hold circuits have a fixed two clock data sample period. When the sample has been acquired, then the ADC control logic is notified of a pending request, then the conversion is performed as the conversion resources become available.

The ADC module always converts pairs of analog input channels, so a typical conversion process requires 24 clock cycles.

FIGURE 16-3: DETAILED CONVERSION SEQUENCE TIMINGS, SEQSAMP = 0, NOT BUSY

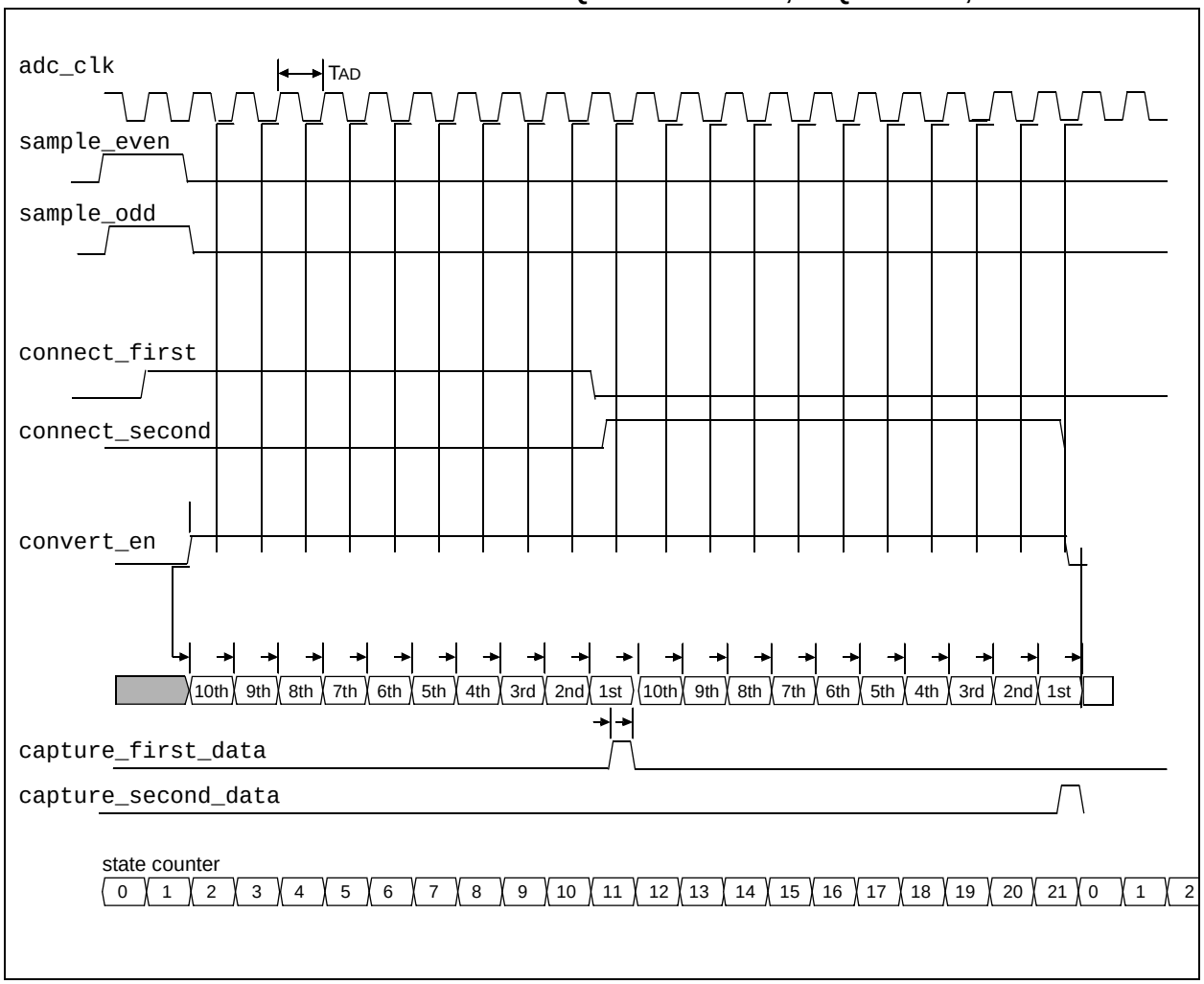

© 2006-2014 Microchip Technology Inc.

FIGURE 16-4: DETAILED CONVERSION SEQUENCE TIMINGS, SEQSAMP = 1

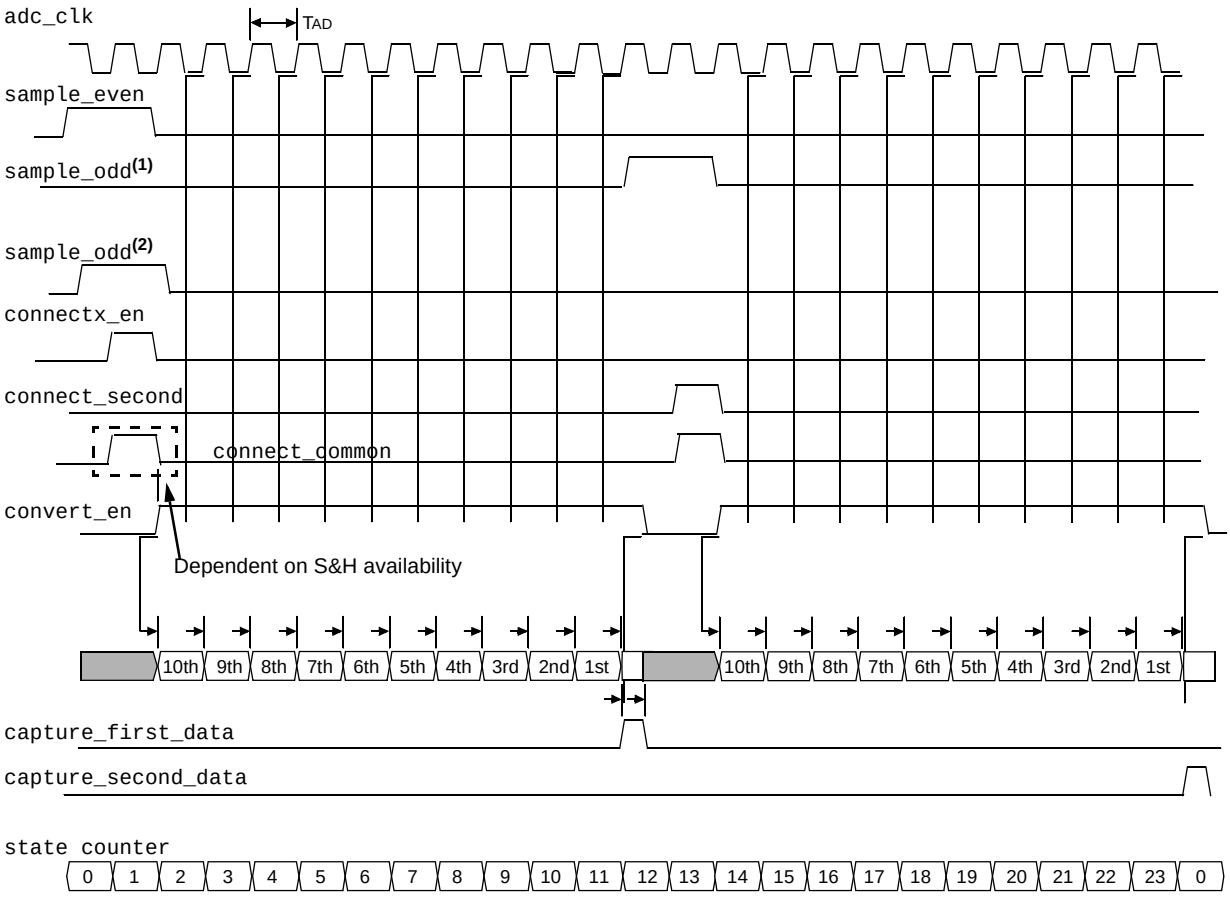

Note 1: For all analog input pairs that do not have dedicated sample and hold circuits, the common sample and hold circuit samples the input at the start of the first and second conversions. Therefore, the samples are sequential, not simultaneous.

2: For all analog input pairs that have dedicated sample and hold circuits, the common sample and hold circuit samples the input at the start of the first conversion so that both samples (odd and even) are near simultaneous.

16.18 Module Power-Down Modes

The module has two internal power modes.

When the ADON bit is '1', the module is in Active mode and is fully powered and functional.

When ADON is '0', the module is in Off mode. The state machine for the module is reset, as are all of the pending conversion requests.

To return to the Active mode from Off mode, the user must wait for the bias generators to stabilize. The stabilization time is specified in the electrical specs.

16.19 Effects of a Reset

A device Reset forces all registers to their Reset state. This forces the ADC module to be turned off, and any conversion and sampling sequence is aborted. The value that is in the ADCBUFx register is not modified.

The ADCBUFx registers contain unknown data after a Power-on Reset.

16.20 Configuring Analog Port Pins

The use of the ADPCFG and TRIS registers control the operation of the A/D port pins.

The port pins that are desired as analog inputs should have their corresponding TRIS bit set (input). If the TRIS bit is cleared (output), the digital output level (V_{OH} or V_{OL}) will be converted.

Port pins that are desired as analog inputs must have the corresponding ADPCFG bit clear. This will configure the port to disable the digital input buffer. Analog levels on pins where ADPCFG<n> = 1, may cause the digital input buffer to consume excessive current.

If a pin is not configured as an analog input ADPCFG<n> = 1, the analog input is forced to AVss, and conversions of that input do not yield meaningful results.

When reading the PORT register, all pins configured as analog input ADPCFG<n> = 0 will read '0'.

The A/D operation is independent of the state of the input selection bits and the TRIS bits.

16.21 Output Formats

The A/D converts 10 bits. The data buffer RAM is 16 bits wide. The ADC data can be read in one of two different formats, as shown in Figure 16-5. The FORM bit selects the format. Each of the output formats translates to a 16-bit result on the data bus.

© 2006-2014 Microchip Technology Inc.

FIGURE 16-5: A/D OUTPUT DATA FORMAT

RAM contents:							d09	d08	d07	d06	d05	d04	d03	d02	d01	d00
Read to Bus:																
Fractional	d09	d08	d07	d06	d05	d04	d03	d02	d01	d00	0	0	0	0	0	0
Integer	0	0	0	0	0	0	d09	d08	d07	d06	d05	d04	d03	d02	d01	d00

TABLE 16-1: ADC REGISTER MAP

File Name	ADR	Bit 15	Bit 14	Bit 13	Bit 12	Bit 11	Bit 10	Bit 9	Bit 8	Bit 7	Bit 6	Bit 5	Bit 4	Bit 3	Bit 2	Bit 1	Bit 0	All Resets
ADCON	0300	ADON	—	ADSIDL	—	—	GSWTRG	—	FORM	EIE	ORDER	SEQSAMP	—	—	ADCS<2:0>			0009
ADPCFG	0302	—	—	—	—	PCFG11	PCFG10	PCFG9	PCFG8	PCFG7	PCFG6	PCFG5	PCFG4	PCFG3	PCFG2	PCFG1	PCFG0	0000
Reserved	0304	—	—	—	—	—	—	—	—	—	—	—	—	—	—	—	—	0000
ADSTAT	0306	—	—	—	—	—	—	—	—	—	—	P5RDY	P4RDY	P3RDY	P2RDY	P1RDY	P0RDY	0000
ADBASE	0308	ADBASE<15:1>															—	0000
ADCPC0	030A	IRQEN1	PEND1	SWTRG1	TRGSRC1<4:0>					IRQEN0	PEND0	SWTRG0	TRGSRC0<4:0>					0000
ADCPC1	030C	IRQEN3	PEND3	SWTRG3	TRGSRC3<4:0>					IRQEN2	PEND2	SWTRG2	TRGSRC2<4:0>					0000
ADCPC2	030E	IRQEN5	PEND5	SWTRG5	TRGSRC5<4:0>					IRQEN4	PEND4	SWTRG4	TRGSRC4<4:0>					0000
Reserved	0310 – 031E	—-	—	—	—	—	—	—	—	—	—	—	—	—	—	—	—	0000
ADCBUF0	0320	—	—	—	—	—	—	ADC Data Buffer 0										xxxx
ADCBUF1	0322	—	—	—	—	—	—	ADC Data Buffer 1										xxxx
ADCBUF2	0324	—	—	—	—	—	—	ADC Data Buffer 2										xxxx
ADCBUF3	0326	—	—	—	—	—	—	ADC Data Buffer 3										xxxx
ADCBUF4	0328	—	—	—	—	—	—	ADC Data Buffer 4										xxxx
ADCBUF5	032A	—	—	—	—	—	—	ADC Data Buffer 5										xxxx
ADCBUF6	032C	—	—	—	—	—	—	ADC Data Buffer 6										xxxx
ADCBUF7	032E	—	—	—	—	—	—	ADC Data Buffer 7										xxxx
ADCBUF8	0330	—	—	—	—	—	—	ADC Data Buffer 8										xxxx
ADCBUF9	0332	—	—	—	—	—	—	ADC Data Buffer 9										xxxx
ADCBUF10	0334	—	—	—	—	—	—	ADC Data Buffer 10										xxxx
ADCBUF11	0336	—	—	—	—	—	—	ADC Data Buffer 11										xxxx
Reserved	0338 – 037E	—	—	—	—	—	—	—	—	—	—	—	—	—	—	—	—	0000

© 2006-2014 Microchip Technology Inc.

17.0 SMPS COMPARATOR MODULE

Note: This data sheet summarizes features of this group of dsPIC30F devices and is not intended to be a complete reference source. For more information on the CPU, peripherals, register descriptions and general device functionality, refer to the "*dsPIC30F Family Reference Manual*" (DS70046).

The dsPIC30F SMPS Comparator module monitors current and/or voltage transients that may be too fast for the CPU and ADC to capture.

17.1 Features Overview

- 16 comparator inputs
- 10-bit DAC provides reference
- Programmable output polarity
- Interrupt generation capability
- Selectable Input sources
- DAC has three ranges of operation:
  - AVDD/2
  - Internal Reference 1.2V 1%
  - External Reference < (AVDD - 1.6V)
- ADC sample and convert trigger capability
- Can be disabled to reduce power consumption
- Functional support for PWM Module:
  - PWM Duty Cycle Control
  - PWM Period Control
  - PWM Fault Detect

FIGURE 17-1: COMPARATOR MODULE BLOCK DIAGRAM

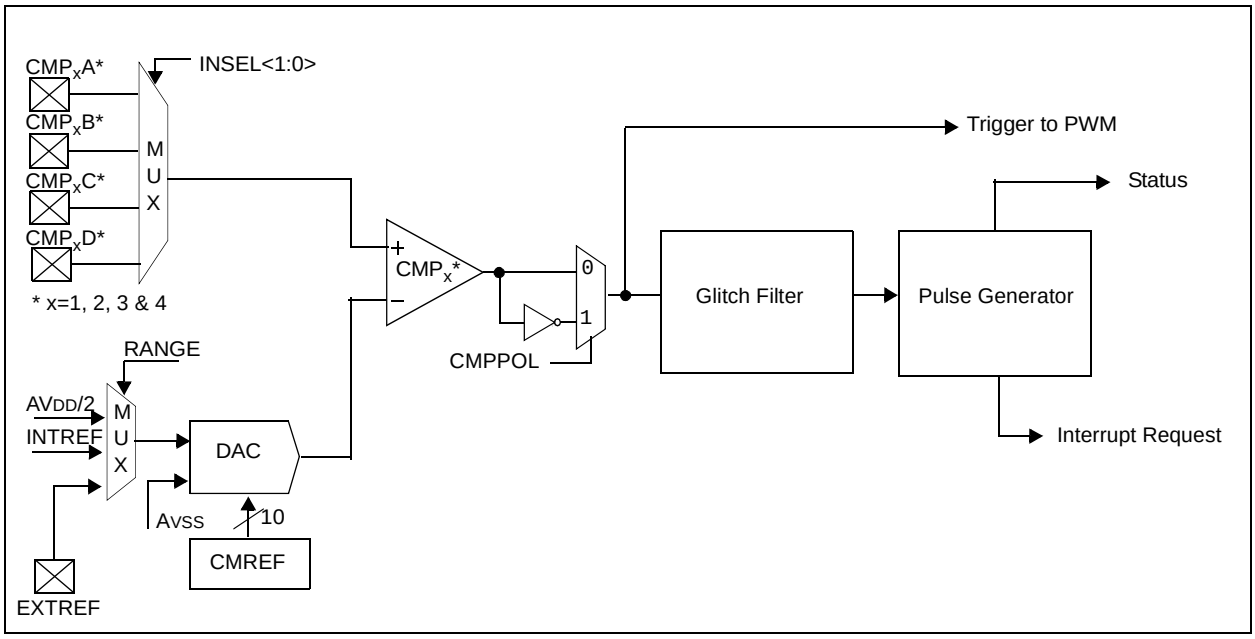

17.2 Module Applications

This module provides a means for the SMPS dsPIC DSC devices to monitor voltage and currents in a power conversion application. The ability to detect transient conditions and stimulate the dsPIC DSC processor and/or peripherals without requiring the processor and ADC to constantly monitor voltages or currents frees the dsPIC DSC to perform other tasks.

The Comparator module has a high-speed comparator and an associated 10-bit DAC that provides a programmable reference voltage to one input of the comparator. The polarity of the comparator output is user programmable. The output of the module can be used in the following modes:

- Generate an interrupt
- Trigger an ADC sample and convert process
- Truncate the PWM signal (current limit)
- Truncate the PWM period (current minimum)
- Disable the PWM outputs (Fault-latch)

The output of the Comparator module may be used in multiple modes at the same time, such as: (1) generate an interrupt, (2) have the ADC take a sample and convert it and (3) truncate the PWM output in response to a voltage being detected beyond its expected value.

The Comparator module can also be used to wake-up the system from Sleep or Idle mode when the analog input voltage exceeds the programmed threshold voltage.

17.3 Module Description

The Comparator module uses a 20 nsec comparator. The comparator offset is ±5 mV typical. The negative input of the comparator is always connected to the DAC circuit. The positive input of the comparator is connected to an analog multiplexer that selects the desired source pin.

17.4 DAC

The range of the DAC is controlled via an analog multiplexer that selects either AVDD/2, internal 1.2V 1% reference, or an external reference source EXTREF. The full range of the DAC (AVDD/2) will typically be used when the chosen input source pin is shared with the ADC. The reduced range option (INTREF) will likely be used when monitoring current levels via a CLx pin using a current sense resistor. Usually, the measured voltages in such applications are small (<1.25V), therefore the option of using a reduced reference range for the comparator extends the available DAC resolution in these applications. The use of an external reference enables the user to connect to a reference that better suits their application.

17.5 Interaction with I/O Buffers

If the comparator module is enabled and a pin has been selected as the source for the comparator, then the chosen I/O pad must disable the digital input buffer associated with the pad to prevent excessive currents in the digital buffer due to analog input voltages.

17.6 Digital Logic

The CMPCONx register (see Register 17-1) provides the control logic that configures the Comparator module. The digital logic provides a glitch filter for the comparator output to mask transient signals less than two TCY (66 nsec) in duration. In Sleep or Idle mode, the glitch filter is bypassed to enable an asynchronous path from the comparator to the interrupt controller. This asynchronous path can be used to wake-up the processor from Sleep or Idle mode.

The comparator can be disabled while in Idle mode if the CMPSIDL bit is set. If a device has multiple comparators, if any CMPSIDL bit is set, then the entire group of comparators will be disabled while in Idle mode. This behavior reduces complexity in the design of the clock control logic for this module.

The digital logic also provides a one TCY width pulse generator for triggering the ADC and generating interrupt requests.

The CMPDACx (see Register 17-2) register provides the digital input value to the reference DAC.

If the module is disabled, the DAC and comparator are disabled to reduce power consumption.

17.7 Comparator Input Range

The comparator has a limitation for the input Common-Mode Range (CMR) of about 3.5 volts (AVDD – 1.5 volts). This means that both inputs should not exceed this value, or the comparator's output will become indeterminate. As long as one of the inputs is within the Common-Mode Range, the comparator output will be correct. An input excursion into the CMR region will not corrupt the comparator output, but the comparator input is saturated.

17.8 DAC Output Range

The DAC has a limitation for the maximum reference voltage input of (AVDD - 1.6) volts. An external reference voltage input should not exceed this value or the reference DAC output will become indeterminate.

17.9 Comparator Registers

The Comparator module is controlled by the following registers:

- Comparator Control Registerx (CMPCONx)
- Comparator DAC Control Registerx (CMPDACx)

© 2006-2014 Microchip Technology Inc.

REGISTER 17-1: COMPARATOR CONTROL REGISTERx (CMPCONx)

R/W-0	U-0	R/W-0	U-0	U-0	U-0	U-0	U-0
CMPON	—	CMPSIDL	—	—	—	—	—
bit 15							bit 8

R/W-0	R/W-0	R/W-0	U-0	R/W-0	U-0	R/W-0	R/W-0
INSEL<1:0>		EXTREF	—	CMPSTAT	—	CMPPOL	RANGE
bit 7							bit 0

Legend:			
R = Readable bit	W = Writable bit	U = Unimplemented bit, read as ‘0’	
-n = Value at POR	‘1’ = Bit is set	‘0’ = Bit is cleared	x = Bit is unknown

bit 15 **CMPON:** A/D Operating Mode bit
1 = Comparator module is enabled
0 = Comparator module is disabled (reduces power consumption)

bit 14 **Unimplemented:** Read as ‘0’

bit 13 **CMPSIDL:** Stop in Idle Mode bit
1 = Discontinue module operation when device enters Idle mode.
0 = Continue module operation in Idle mode.

If a device has multiple comparators, any CMPSIDL bit set to ‘1’ disables **ALL** comparators while in Idle mode.

bit 12-8 **Reserved:** Read as ‘0’

bit 7-6 **INSEL<1:0>:** Input Source Select for Comparator bits
00 = Select CMPxA input pin
01 = Select CMPxB input pin
10 = Select CMPxC input pin
11 = Select CMPxD input pin

bit 5 **EXTREF:** Enable External Reference bit
1 = External source provides reference to DAC
0 = Internal reference sources provide source to DAC

bit 4 **Reserved:** Read as ‘0’

bit 3 **CMPSTAT:** Current State of Comparator Output Including CMPPOL Selection bit

bit 2 **Reserved:** Read as ‘0’

bit 1 **CMPPOL:** Comparator Output Polarity Control bit
1 = Output is inverted
0 = Output is non inverted

bit 0 **RANGE:** Selects DAC Output Voltage Range bit
1 = High Range: Max DAC value = AV_{DD}/2, 2.5V @ 5 volt V_{DD}
0 = Low Range: Max DAC value = INTREF, 1.2V ±1%

REGISTER 17-2: COMPARATOR DAC CONTROL REGISTERx (CMPDACx)

U-0	U-0	U-0	U-0	U-0	U-0	R/W-0	R/W-0
—	—	—	—	—	—	CMREF<9:8>	
bit 15							bit 8

R/W-0	R/W-0	R/W-0	R/W-0	R/W-0	R/W-0	R/W-0	R/W-0
CMREF<7:0>							
bit 7							bit 0

Legend:			
R = Readable bit	W = Writable bit	U = Unimplemented bit, read as ‘0’	
-n = Value at POR	‘1’ = Bit is set	‘0’ = Bit is cleared	x = Bit is unknown

bit 15-10 **Reserved:** Read as ‘0’

These bits are reserved for possible future expansion of the DAC from 10 bits to more bits.

bit 9-0 **CMREF<9:0>:** Comparator Reference Voltage Select bits

1111111111 = (CMREF * INTREF/1024) or (CMREF * (AV_{DD}/2)/1024) volts depending on Range bit
. . . . .
0000000000 = 0.0 volts

© 2006-2014 Microchip Technology Inc.

TABLE 17-1: ANALOG COMPARATOR CONTROL REGISTER MAP

File Name	ADR	Bit 15	Bit 14	Bit 13	Bit 12	Bit 11	Bit 10	Bit 9	Bit 8	Bit 7	Bit 6	Bit 5	Bit 4	Bit 3	Bit 2	Bit 1	Bit 0	All Resets
CMPCON1	04C0	CMPON	—	CMPSIDL	—	—	—	—	—	INSEL<1:0>		EXTREF	—	CMPSTAT	—	CMPPOL	RANGE	0000
CMPDAC1	04C2	—	—	—	—	—	—	CMREF<9:0>										0000
CMPCON2	04C4	CMPON	—	CMPSIDL	—	—	—	—	—	INSEL<1:0>		EXTREF	—	CMPSTAT	—	CMPPOL	RANGE	0000
CMPDAC2	04C6	—	—	—	—	—	—	CMREF<9:0>										0000
CMPCON3	04C8	CMPON	—	CMPSIDL	—	—	—	—	—	INSEL<1:0>		EXTREF	—	CMPSTAT	—	CMPPOL	RANGE	0000
CMPDAC3	04CA	—	—	—	—	—	—	CMREF<9:0>										0000
CMPCON4	04CC	CMPON	—	CMPSIDL	—	—	—	—	—	INSEL<1:0>		EXTREF	—	CMPSTAT	—	CMPPOL	RANGE	0000
CMPDAC4	04CE	—	—	—	—	—	—	CMREF<9:0>										0000

© 2006-2014 Microchip Technology Inc.

NOTES:

© 2006-2014 Microchip Technology Inc.

18.0 SYSTEM INTEGRATION

Note: This data sheet summarizes features of this group of dsPIC30F devices and is not intended to be a complete reference source. For more information on the CPU, peripherals, register descriptions and general device functionality, refer to the "*dsPIC30F Family Reference Manual*" (DS70046).
For more information on the device instruction set and programming, refer to the "*dsPIC30F/33F Programmer's Reference Manual*" (DS70157).

There are several features intended to maximize system reliability, minimize cost through elimination of external components, provide power-saving operating modes and offer code protection:

- Oscillator Selection
- Reset:
  - Power-on Reset (POR)
  - Power-up Timer (PWRT)
  - Oscillator Start-up Timer (OST)
- Watchdog Timer (WDT)
- Power-Saving modes (Sleep and Idle)
- Code Protection
- Unit ID Locations
- In-Circuit Serial Programming (ICSP) programming capability

dsPIC30F devices have a Watchdog Timer, which can be permanently enabled via the Configuration bits or can be software controlled. It runs off its own RC oscillator for added reliability. There are two timers that offer necessary delays on power-up. One is the Oscillator Start-up Timer (OST), intended to keep the chip in Reset until the crystal oscillator is stable. The other is the Power-up Timer (PWRT), which provides a delay on power-up only, designed to keep the part in Reset mode while the power supply stabilizes. With these two timers on-chip, most applications need no external Reset circuitry.

Sleep mode is designed to offer a very low-current Power-Down mode. The user can wake-up from Sleep mode through external Reset, Watchdog Timer Wake-up or through an interrupt. Several oscillator options are also made available to allow the part to fit a wide variety of applications. In the Idle mode, the clock sources are still active, but the CPU is shut off. The RC oscillator option saves system cost, while the LP crystal option saves power.

18.1 Oscillator System Overview

The dsPIC30F oscillator system has the following modules and features:

- Various external and internal oscillator options as clock sources
- An on-chip PLL to boost internal operating frequency
- A clock switching mechanism between various clock sources
- Programmable clock postscaler for system power savings
- A Fail-Safe Clock Monitor (FSCM) that detects clock failure and takes fail-safe measures
- Clock Control register OSCCON
- Configuration bits for main oscillator selection

Configuration bits determine the clock source upon Power-on Reset (POR). Thereafter, the clock source can be changed between permissible clock sources. The OSCCON register controls the clock switching and reflects system clock related status bits.

Note: 32 kHz crystal operation is not enabled on dsPIC30F1010/202X devices.

A simplified diagram of the oscillator system is shown in Figure 18-1.

18.2 Oscillator Control Registers

The oscillators are controlled with these registers:

- OSCCON: Oscillator Control Register
- OSCTUN2: Oscillator Tuning Register 2
- LFSR: Linear Feedback Shift Register
- FOSCSEL: Oscillator Selection Configuration Bits
- FOSC: Oscillator Selection Configuration Bits

FIGURE 18-1: OSCILLATOR SYSTEM BLOCK DIAGRAM

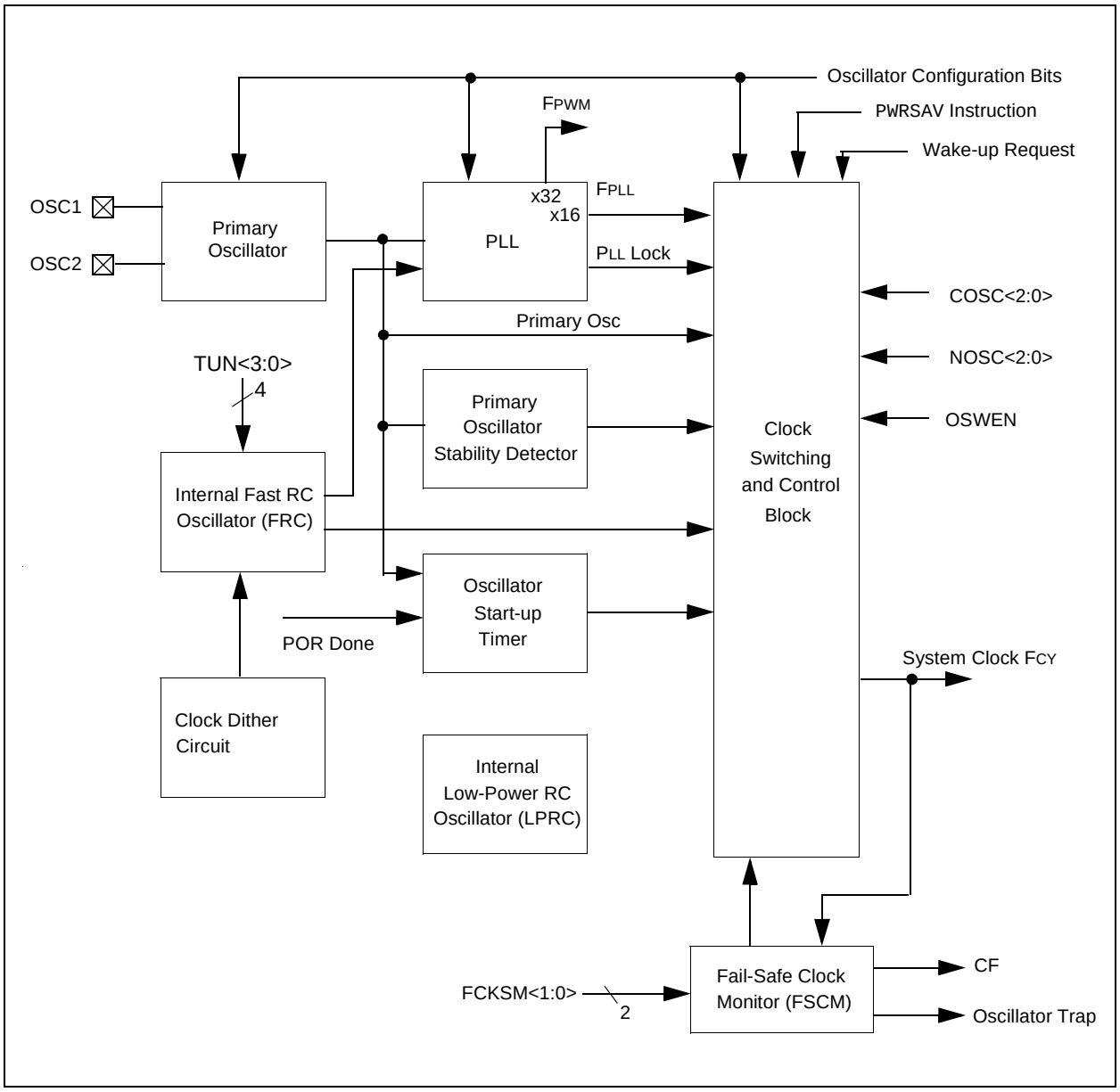

© 2006-2014 Microchip Technology Inc.

REGISTER 18-1: OSCCON: OSCILLATOR CONTROL REGISTER

U-0	R-y, HS, HC	R-y, HS, HC	R-y, HS, HC	U-0	R/W-y	R/W-y	R/W-y
—	COSC<2:0>			—	NOSC<2:0>		
bit 15							bit 8

R/W-0	U-0	R-0, HS,HC	R/W-0	R/C-0, HS, HC	R/W-0	U-0	R/W-0, HC
CLKLOCK	—	LOCK	PRCDEN	CF	TSEQEN	—	OSWEN
bit 7							bit 0

Legend:	x = Bit is unknown	
R = Readable bit	W = Writable bit	U = Unimplemented bit, read as ‘0’
-n = Value at POR	‘1’ = Bit is set	‘0’ = Bit is cleared
HC = Cleared by hardware	HS = Set by hardware	-y = Value set from Configuration bits on POR

bit 15 **Unimplemented:** Read as ‘0’

bit 14-12 **COSC<2:0>:** Current Oscillator Group Selection bits (read-only)
000 = Fast RC Oscillator (FRC)
001 = Fast RC Oscillator (FRC) with PLL Module
010 = Primary Oscillator (HS, EC)
011 = Primary Oscillator (HS, EC) with PLL Module
100 = Reserved
101 = Reserved
110 = Reserved
111 = Reserved
This bit is Reset upon:
Set to FRC value (‘000’) on POR
Loaded with NOSC<2:0> at the completion of a successful clock switch
Set to FRC value (‘000’) when FSCM detects a failure and switches clock to FRC

bit 11 **Unimplemented:** Read as ‘0’

bit 10-8 **NOSC<2:0>:** New Oscillator Group Selection bits
000 = Fast RC Oscillator (FRC)
001 = Fast RC Oscillator (FRC) with PLL Module
010 = Primary Oscillator (HS, EC)
011 = Primary Oscillator (HS, EC) with PLL Module
100 = Reserved
101 = Reserved
110 = Reserved
111 = Reserved

bit 7 **CLKLOCK:** Clock Lock Enabled bit
1 = If (FCKSM1 = 1), then clock and PLL configurations are locked
If (FCKSM1 = 0), then clock and PLL configurations may be modified
0 = Clock and PLL selection are not locked, configurations may be modified

Note: Once set, this bit can only be cleared via a Reset.

bit 6 **Unimplemented:** Read as ‘0’

REGISTER 18-1: OSCCON: OSCILLATOR CONTROL REGISTER (CONTINUED)

bit 5 **LOCK:** PLL Lock Status bit (read-only)

1 = Indicates that PLL is in lock
0 = Indicates that PLL is out of lock (or disabled)
This bit is Reset upon:
Reset on POR
Reset when a valid clock switching sequence is initiated by the clock switch state machine
Set when PLL lock is achieved after a PLL start
Reset when lock is lost
Read zero when PLL is not selected as a Group 1 system clock

bit 4 **PRCDEN:** Pseudo Random Clock Dither Enable bit

1 = Pseudo random clock dither is enabled
0 = Pseudo random clock dither is disabled

bit 3 **CF:** Clock Fail Detect bit (read/clearable by application)

1 = FSCM has detected clock failure
0 = FSCM has NOT detected clock failure
This bit is Reset upon:
Reset on POR
Reset when a valid clock switching sequence is initiated by the clock switch state machine
Set when clock fail detected

bit 2 **TSEQEN:** FRC Tune Sequencer Enable bit

1 = The TUN<3:0>, TSEQ1<3:0>, **...** , TSEQ7<3:0> bits in the OSCTUN and the OSCTUN2 registers sequentially tune the FRC oscillator. Each field being sequentially selected via the ROLL<2:0> signals from the PWM module.
0 = The TUN<3:0> bits in OSCTUN register tunes the FRC oscillator

bit 1 **Unimplemented:** Read as '0'

bit 0 **OSWEN:** Oscillator Switch Enable bit

1 = Request oscillator switch to selection specified by NOSC<1:0> bits
0 = Oscillator switch is complete
This bit is Reset upon:
Reset on POR
Reset after a successful clock switch
Reset after a redundant clock switch
Reset after FSCM switches the oscillator to (Group 3) FRC

© 2006-2014 Microchip Technology Inc.

REGISTER 18-2: OSCTUN: OSCILLATOR TUNING REGISTER

R/W-0	R/W-0	R/W-0	R/W-0	R/W-0	R/W-0	R/W-0	R/W-0
TSEQ3<3:0>				TSEQ2<3:0>			
bit 15							bit 8

R/W-0	R/W-0	R/W-0	R/W-0	R/W-0	R/W-0	R/W-0	R/W-0
TSEQ1<3:0>				TUN<3:0>			
bit 7							bit 0

Legend:			
R = Readable bit	W = Writable bit	U = Unimplemented bit, read as ‘0’	
-n = Value at POR	‘1’ = Bit is set	‘0’ = Bit is cleared	x = Bit is unknown

bit 15-12 **TSEQ3<3:0>:** Tune Sequence Value #3 bits
When PWM ROLL<2:0> = `011`, this field is used to tune the FRC instead of TUN<3:0>

bit 11-8 **TSEQ2<3:0>:** Tune Sequence Value #2 bits
When PWM ROLL<2:0> = `010`, this field is used to tune the FRC instead of TUN<3:0>

bit 7-4 **TSEQ1<3:0>:** Tune Sequence Value #1 bits
When PWM ROLL<2:0> = `001`, this field is used to tune the FRC instead of TUN<3:0>

bit 3-0 **TUN<3:0>:** Specifies the user tuning capability for the internal fast RC oscillator . If the TSEQEN bit in the OSCCON register is set, this field, along with bits TSEQ1-TSEQ7, will sequentially tune the FRC oscillator.

`0111` = Maximum frequency
`0110` =
`0101` =
`0100` =
`0011` =
`0010` =
`0001` =
`0000` = Center frequency, oscillator is running at calibrated frequency
`1111` =
`1110` =
`1101` =
`1100` =
`1011` =
`1010` =
`1001` =
`1000` = Minimum frequency

REGISTER 18-3: OSCTUN2: OSCILLATOR TUNING REGISTER 2

R/W-0	R/W-0	R/W-0	R/W-0	R/W-0	R/W-0	R/W-0	R/W-0
TSEQ7<3:0>				TSEQ6<3:0>			
bit 15							bit 8

R/W-0	R/W-0	R/W-0	R/W-0	R/W-0	R/W-0	R/W-0	R/W-0
TSEQ5<3:0>				TSEQ4<3:0>			
bit 7							bit 0

Legend:			
R = Readable bit	W = Writable bit	U = Unimplemented bit, read as ‘0’	
-n = Value at POR	‘1’ = Bit is set	‘0’ = Bit is cleared	x = Bit is unknown

bit 15-12 **TSEQ7<3:0>:** Tune Sequence value #7 bits
When PWM ROLL<2:0> = `111`, this field is used to tune the FRC instead of TUN<3:0>

bit 11-8 **TSEQ6<3:0>:** Tune Sequence value #6 bits
When PWM ROLL<2:0> = `110`, this field is used to tune the FRC instead of TUN<3:0>

bit 7-4 **TSEQ5<3:0>:** Tune Sequence value #5 bits
When PWM ROLL<2:0> = `101`, this field is used to tune the FRC instead of TUN<3:0>

bit 3-0 **TSEQ4<3:0>:** Tune Sequence value #4 bits
When PWM ROLL<2:0> = `100`, this field is used to tune the FRC instead of TUN<3:0>

REGISTER 18-4: LFSR: LINEAR FEEDBACK SHIFT REGISTER

U-0	R/W-0	R/W-0	R/W-0	R/W-0	R/W-0	R/W-0	R/W-0
—	LFSR<14:8>						
bit 15							bit 8

R/W-0	R/W-0	R/W-0	R/W-0	R/W-0	R/W-0	R/W-0	R/W-0
LFSR<7:0>							
bit 7							bit 0

Legend:			
R = Readable bit	W = Writable bit	U = Unimplemented bit, read as ‘0’	
-n = Value at POR	‘1’ = Bit is set	‘0’ = Bit is cleared	x = Bit is unknown

bit 15 **Unimplemented:** Read as ‘`0`’
When PWM ROLL<2:0> = `111`, this field is used to tune the FRC instead of TUN<3:0>

bit 14-8 **LFSR <14:8>:** Most Significant 7 bits of the pseudo random FRC trim value bits

bit 7-0 **LFSR <7:0>:** Least Significant 8 bits of the pseudo random FRC trim value bits

© 2006-2014 Microchip Technology Inc.

REGISTER 18-5: FOSCSEL: OSCILLATOR SELECTION CONFIGURATION BITS

U-0	U-0	U-0	U-0	U-0	U-0	U-0	U-0
—	—	—	—	—	—	—	—
bit 23							bit 16

U-0	U-0	U-0	U-0	U-0	U-0	U-0	U-0
—	—	—	—	—	—	—	—
bit 15							bit 8

U-0	U-0	U-0	U-0	U-0	U-0	R/P	R/P
—	—	—	—	—	—	FNOSC1	FNOSC0
bit 7							bit 0

Legend:			
R = Readable bit	W = Writable bit	U = Unimplemented bit, read as ‘0’	
-n = Value at POR	‘1’ = Bit is set	‘0’ = Bit is cleared	x = Bit is unknown

bit 23-2 **Unimplemented:** Read as ‘0’

bit 1-0 **FNOSC<1:0>:** Initial Oscillator Group Selection on POR bits
00 = Fast RC Oscillator (FRC)
01 = Fast RC Oscillator (FRC) divided by N, with PLL module
10 = Primary Oscillator (HS,EC)
11 = Primary Oscillator (HS,EC) with PLL module

REGISTER 18-6: FOSC: OSCILLATOR SELECTION CONFIGURATION BITS

U-0	U-0	U-0	U-0	U-0	U-0	U-0	U-0
—	—	—	—	—	—	—	—
bit 23							bit 16

U-0	U-0	U-0	U-0	U-0	U-0	U-0	U-0
—	—	—	—	—	—	—	—
bit 15							bit 8

R/P	R/P	R/P	U-0	U-0	R/P	R/P	R/P
FCKSM<1:0>		FRANGE	—	—	OSCIOFNC	POSCMD<1:0>	
bit 7							bit 0

Legend:			
R = Readable bit	W = Writable bit	U = Unimplemented bit, read as ‘0’	
-n = Value at POR	‘1’ = Bit is set	‘0’ = Bit is cleared	x = Bit is unknown

bit 23-8 **Unimplemented:** Read as ‘0’

bit 7-6 **FCKSM<1:0>:** Clock Switching and Monitor Selection Configuration bits

1x = Clock switching is disabled, fail-safe clock monitor is disabled
01 = Clock switching is enabled, fail-safe clock monitor is disabled
00 = Clock switching is enabled, fail-safe clock monitor is enabled

bit 5 **FRANGE:** Frequency Range Select for FRC and PLL bit
Acts like a “Gear Shift” feature that enables the dsPIC DSC device to operate at reduced MIPS at a reduced supply voltage (3.3V)

FRANGE Bit Value	Temperature Rating	FRC Frequency (Nominal)	PLL VCO (Nominal)
1 = High Range	Industrial Extended	14.55 MHz 9.7 MHz	466 MHz (480 MHz max.) 310 MHz (320 MHz max.)
0 = Low Range	Industrial Extended	9.7 MHz 6.4 MHz	310 MHz (320 MHz max.) 205 MHz (211 MHz max.)

bit 4-3 **Unimplemented:** Read as ‘0’

bit 3 **OSCIOFNC:** OSC2 Pin I/O Enable bit

1 = CLKO output signal active on the OSCO pin
0 = CLKO output disabled

bit 1-0 **POSCMD<1:0>:** Primary Oscillator Mode

11 = Primary Oscillator Disabled
10 = HS oscillator mode selected
01 = Reserved
00 = External clock mode selected

© 2006-2014 Microchip Technology Inc.

18.2.1 ACCIDENTAL WRITE PROTECTION

Because the OSCCON register allows clock switching and clock scaling, a write to OSCCON is intentionally made difficult. To write to the OSCCON low byte, this exact sequence must be executed without any other instructions in between:

- Byte Write “46h” to OSCCON low
- Byte Write “57h” to OSCCON low
- Byte Write is allowed for one instruction cycle
  `mov.b W0,OSCCON`

To write to the OSCCON high byte, this exact sequence must be executed without any other instructions in between:

- Byte Write “78h” to OSCCON high
- Byte Write “9Ah” to OSCCON high
- Byte Write is allowed for one instruction cycle
  `mov.b W0,OSCCON + 1`

18.3 Oscillator Configurations

Figure 18-2 shows the derivation of the system clock FCY. The PLL in Figure 18-1 outputs a maximum frequency of 480MHz (high-range FRC option for industrial temperature parts with PLL and TUN<3:0> = `0111` bit settings). This signal is used by the Power Supply PWM module, and is 32 times the input PLL frequency.

Assuming the high-range FRC option is selected on an industrial temperature rated part, the 480 MHz PLL clock signal is divided by 2, providing a 240 MHz signal, which drives the ADC Module. The same 480 MHz signal is also divided by 8 to produce the 60 MHz signal, which is one of the inputs to the FCY multiplexer. The other input to this multiplexer is the FOSC input clock source (either the Primary Oscillator or the FRC) divided by 2. When the PLL is enabled, FCY = FPLL/16. When the PLL is disabled, FCY = FOSC/2.

This method derives the 480 MHz clock:

- FRC Clock with high-range Option and TUN<3:0> = `0111` is = 15 MHz
- PLL enabled
- PWM clock = 15 x 32 = 480 MHz
- FCY = 480 MHz/16 = 30 MHz = 30 MIPS

If the PLL is disabled,

- FRC Clock (with high-range Option and TUN<3:0> = `0111`) is = 15MHz
- FCY = 15 MHz/2 = 7.5 MHz = 7.5 MIPS

FIGURE 18-2: SYSTEM CLOCK AND FADC DERIVATION

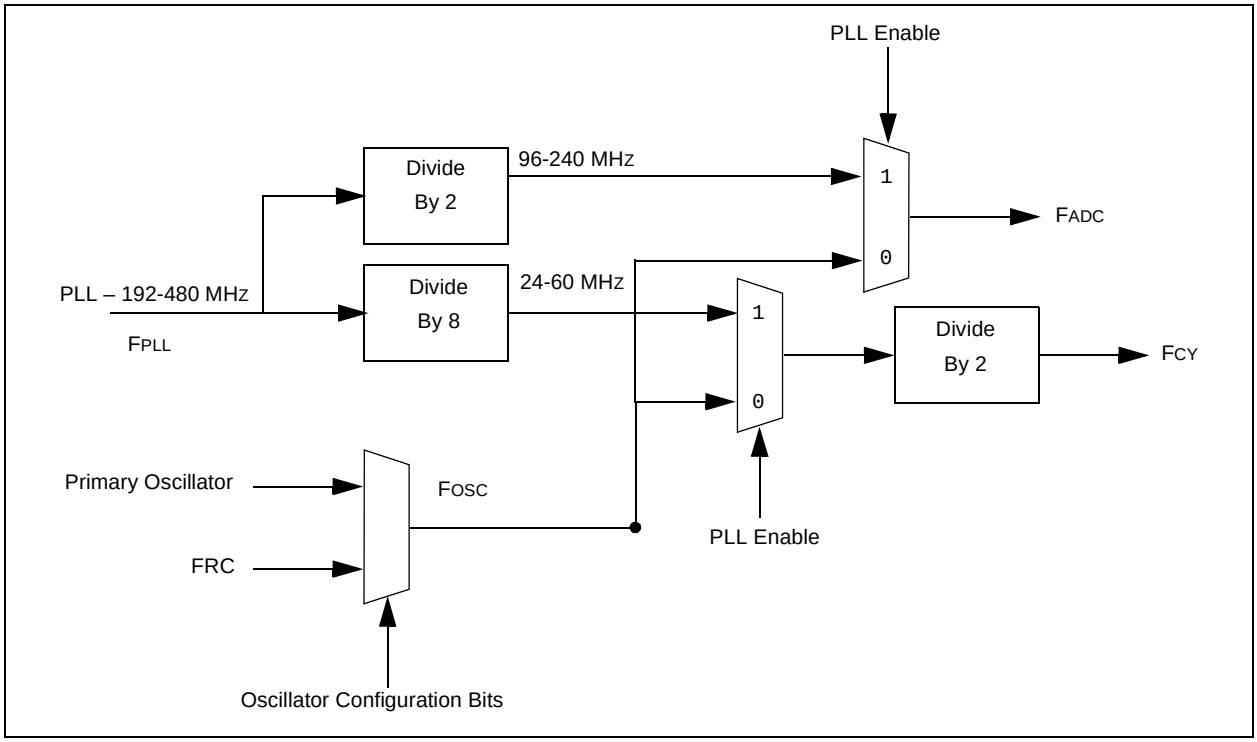

18.3.1 INITIAL CLOCK SOURCE SELECTION

While coming out of a Power-on Reset, the device selects its clock source based on:

a) FNOSC<1:0> Configuration bits that select one of three oscillator groups (HS, EC or FRC)

b) POSCMD1<1:0> Configuration bits that select the Primary Oscillator Mode

c) OSCIOFNC selects if the OSC2 pin is an I/O or clock output

The selection is as shown in Table 18-1.

TABLE 18-1: CONFIGURATION BIT VALUES FOR CLOCK SELECTION

Oscillator Mode	Oscillator Source	FNOSC<1:0>		POSCMD<1:0>		OSCIOFNC	OSC2 Function	OSC1 Function
		Bit 1	Bit 0	Bit 1	Bit 0			
HS w/PLL 32x	PLL	1	1	1	0	N/A	CLKO(1)	CLKI
FRC w/PLL 32x	PLL	0	1	1	1	1	CLKO	I/O
FRC w/PLL 32x	PLL	0	1	1	1	0	I/O	I/O
EC w/PLL 32x	PLL	1	1	0	0	1	CLKO	CLKI
EC w/PLL 32x	PLL	1	1	0	0	0	I/O	CLKI
EC(2)	External	1	0	0	0	1	CLKO	CLKI
EC(2)	External	1	0	0	0	0	I/O	CLKI
HS(2)	External	1	0	1	0	N/A	CLKO(1)	CLKI
FRC(2)	Internal RC	0	0	1	1	0	I/O	I/O
FRC(2)	Internal RC	0	0	1	1	1	CLKO	I/O

Note 1: CLKO is not recommended to drive external circuits.

2: This mode is not recommended for some applications; disabling 32x PLL will not allow operation of high-speed ADC and PWM.

18.3.2 OSCILLATOR START-UP TIMER (OST)

In order to ensure that a crystal oscillator (or ceramic resonator) has started and stabilized, an Oscillator Start-up Timer is included. It is a simple 10-bit counter that counts 1024 TOSC cycles before releasing the oscillator clock to the rest of the system. The time-out period is designated as TOST. The TOST time is involved every time the oscillator has to restart (i.e., on POR and wake-up from Sleep). The Oscillator Start-up Timer is applied to the HS Oscillator mode (upon wake-up from Sleep and POR) for the primary oscillator.

18.3.3 PHASE LOCKED LOOP (PLL)

The PLL multiplies the clock, which is generated by the primary oscillator. The PLL is selectable to have a gain of x32 only. Input and output frequency ranges are summarized in Table 18-2.

TABLE 18-2: PLL FREQUENCY RANGE

FIN	PLL Multiplier	FOUT
6.4 MHz	x32	205 MHz
9.7 MHz	x32	310 MHz
14.55 MHz	x32	466 MHz

The PLL features a lock output, which is asserted when the PLL enters a phase locked state. Should the loop fall out of lock (e.g., due to noise), the lock signal will be rescinded. The state of this signal is reflected in the read-only LOCK bit in the OSCCON register.

© 2006-2014 Microchip Technology Inc.

18.4 PRIMARY OSCILLATOR ON OSC1/ OSC2 PINS:

The primary oscillator uses is shown in Figure 18-3.

FIGURE 18-3: PRIMARY OSCILLATOR

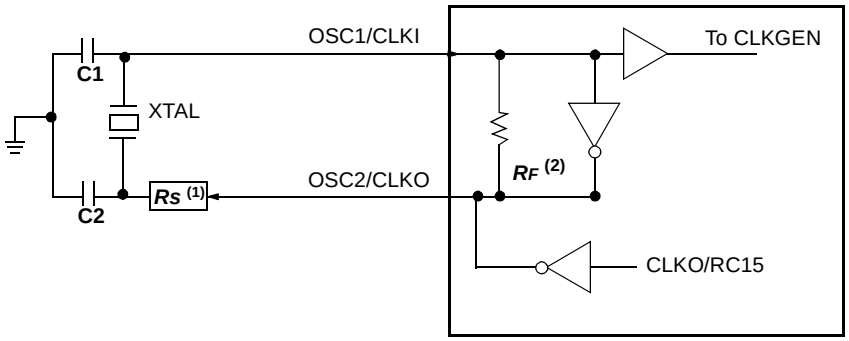

Note 1: A series resistor, Rs, may be required for AT strip cut crystals.

2: The feedback resistor, RF, is typically in the range of 2 to 10 MΩ.

18.5 EXTERNAL CLOCK INPUT

Two of the primary Oscillator modes use an external clock. These modes are EC and EC with IO.

In the EC mode (Figure 18-4), the OSC1 pin can be driven by CMOS drivers. In this mode, the OSC1 pin is high-impedance and the OSC2 pin is the clock output (FOSC/2). This output clock is useful for testing or synchronization purposes.

In the EC with IO mode (Figure 18-5), the OSC1 pin can be driven by CMOS drivers. In this mode, the OSC1 pin is high-impedance and the OSC2 pin becomes a general purpose I/O pin. The feedback device between OSC1 and OSC2 is turned off to save current.

FIGURE 18-4: EXTERNAL CLOCK INPUT OPERATION (EC OSCILLATOR CONFIGURATION)

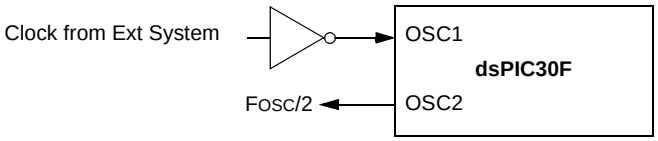

FIGURE 18-5: EXTERNAL CLOCK INPUT OPERATION (ECIO OSCILLATOR CONFIGURATION)

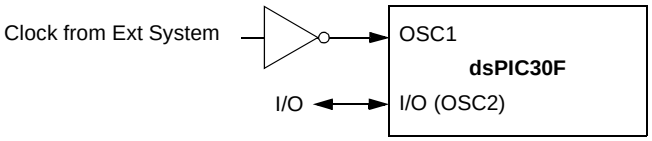

18.6 INTERNAL FAST RC OSCILLATOR (FRC)

FRC is a fast, precise frequency internal RC oscillator. The FRC oscillator is designed to run at a frequency of 6.4/9.7/14.55 MHz (<±2% accuracy). The FRC oscillator option is intended to be accurate enough to provide the clock frequency necessary to maintain baud rate tolerance for serial data transmissions. The user has the ability to tune the FRC frequency by +-3%.

The FRC oscillator is powered:

a) Any time the EC or HS Oscillator modes are NOT selected.
b) When the fail-safe clock monitor is enabled and a clock fail is detected, forcing a switch to FRC.

18.6.1 FREQUENCY RANGE SELECTION

The FRC module has a “Gear Shift” control signal that selects low range (9.7 MHz for industrial temperature rated parts and 6.4 MHz for extended temperature rated parts) or high range (14.55 MHz for industrial temperture rated parts and 9.7 MHz for extended temperature rated parts) frequency of operation. This feature enables a dsPIC DSC device to operate up to a maiximum speed of 20 MIPS at 3.3V or up to a maximum speed of 30 MIPS at 5.0V and remain with system specifications.

18.6.2 NOMINAL FREQUENCY VALUES

The FRC module is calibrated to a nominal 9.7 MHz for industrial temperature rated parts and 6.4 MHz for extended temperature rated parts in low range and 14.55 MHz for industrial temperture rated parts and 9.7 MHz for extended temperature rated parts in high range This feature enables a user to “tune” the dsPIC DSC device frequency of operation by +-3% and still remain within system specifications.

18.6.3 FRC FREQUENCY USER TUNING

The FRC is calibrated at the factory to give a nominal 6.4/9.7/14.55 MHz. The TUN<3:0> field in the OSCTUN register is available to the user for trimming the FRC oscillator frequency in applications.

The 4-bit tuning control signals are supplied by the OSCTUN or the OSCTUN2 registers depending on the TSEQEN bit in the OSCCON register.

The tuning range of the 14.55 MHz oscillator is ±0.45 MHz (±3%) nominal.

The base frequency can be tuned in the user's application. This frequency tuning capability allows the user to deviate from the factory calibrated frequency. The user can tune the frequency by writing to the OSCTUN register TUN<3:0> bits.

18.6.4 CLOCK DITHERING LOGIC

In power conversion applications, the primary electrical noise emission that the designers want to reduce is caused by the power transistors switching at the PWM frequency. By changing the system clock frequency of the SMPS dsPIC DSC, the resultant PWM frequency will change and the peak EMI will be reduced at the noise is spread over a wider frequency range.
Typically, the range of frequency variation is few percent. The dsPIC30F1010/202X can provide two ways to vary system clock frequency on a PWM cycle basis. These are Frequency Sequencing mode and Pseudo Random Clock Dithering mode. Table 18-8 shows the implementation details of both these methods.

18.6.5 FREQUENCY SEQUENCING MODE

The Frequency Sequencing mode enables the PWM module to select a sequence of eight different FRC TUN values to vary the system frequency with each rollover of the primary PWM time base. The OSCTUN and the OSCTUN2 registers allow the user to specify eight sequential tune values if the TSEQEN bit is set in the OSCCON register. If the TSEQEN bit is zero, then only the TUN bits affect the FRC frequency.

A 4-bit wide multiplexer with eight sets of inputs selects the tuning value from the TUN and the TSEQx bit fields. The multiplexer is controlled by the ROLL<5:3> counter in the PWM module. The ROLL<5:3> counter increments every time the primary time base rolls over after reaching the period value.

18.6.6 PSEUDO RANDOM CLOCK DITHERING MODE

The Pseudo Random Clock Dither (PRCD) logic is implemented with a 15-bit LFSR (Linear Feedback Shift Register), which is a shift register with a few exclusive OR gates. The lower four bits of the LFSR provides the FRC TUNE bits. The PRCD feature is enabled by setting the PRCDEN bit in the OSCCON register. The LSFR is “clocked” (enabled to clock) once every time the ROLL<3> bit changes state, which occurs once every 8 PWM cycles.

18.6.7 FAIL-SAFE CLOCK MONITOR

The Fail-Safe Clock Monitor (FSCM) allows the device to continue to operate even in the event of an oscillator failure. The FSCM function is enabled by appropriately programming the FCKSM Configuration bits (Clock Switch and Monitor Selection bits) in the FOSC Configuration register.

In the event of an oscillator failure, the FSCM will generate a clock failure trap event and will switch the system clock over to the FRC oscillator. The user will then have the option to either attempt to restart the oscillator or execute a controlled shutdown. The user may decide to treat the trap as a warm Reset by sim-

© 2006-2014 Microchip Technology Inc.

ply loading the Reset address into the oscillator fail trap vector. In this event, the CF (Clock Fail) status bit (OSCCON<3>) is also set whenever a clock failure is recognized.

In the event of a clock failure, the WDT is unaffected and continues to run on the LPRC clock.

If the oscillator has a very slow start-up time coming out of POR or Sleep, it is possible that the PWRT timer will expire before the oscillator has started. In such cases, the FSCM will be activated and the FSCM will initiate a clock failure trap, and the COSC<2:0> bits are loaded with FRC oscillator selection. This will effectively shut off the original oscillator that was trying to start.

The user may detect this situation and restart the oscillator in the clock fail trap, ISR.

Upon a clock failure detection, the FSCM module will initiate a clock switch to the FRC oscillator as follows:

1. The COSC bits (OSCCON<14:12>) are loaded with the FRC oscillator selection value
2. CF bit is set (OSCCON<3>)
3. OSWEN control bit (OSCCON<0>) is cleared

For the purpose of clock switching, the clock sources are sectioned into two groups:

1. Primary
2. Internal FRC

The user can switch between these functional groups, but cannot switch between options within a group. If the primary group is selected, then the choice within the group is always determined by the FNOSC<1:0> Configuration bits.

The OSCCON register holds the control and status bits related to clock switching. If Configuration bits FCKSM<1:0> = 1x, then the clock switching and Fail-Safe Clock Monitor functions are disabled. This is the default Configuration bit setting.

If clock switching is disabled, then the FNOSC<1:0> and POSCMD<1:0> bits directly control the oscillator selection and the COSC<2:0> bits do not control the clock selection. However, these bits will reflect the clock source selection.

Note:	The application should not attempt to switch to a clock frequency lower than 100 KHz when the Fail-Safe Clock Monitor is enabled. If clock switching is performed, the device may generate an oscillator fail trap and switch to the Fast RC oscillator.

18.7 Reset

The dsPIC30F1010/202X differentiates between various kinds of Reset:

a) Power-on Reset (POR)
b) $\overline{\text{MCLR}}$ Reset during normal operation
c) $\overline{\text{MCLR}}$ Reset during Sleep
d) Watchdog Timer (WDT) Reset (during normal operation)
e) RESET Instruction
f) Reset cause by trap lock-up (TRAPR)
g) Reset caused by illegal opcode, or by using an uninitialized W register as an Address Pointer (IOPUWR)

Different registers are affected in different ways by various Reset conditions. Most registers are not affected by a WDT wake-up, since this is viewed as the resumption of normal operation. Status bits from the RCON register are set or cleared differently in different Reset situations, as indicated in Table 18-3. These bits are used in software to determine the nature of the Reset.

A block diagram of the on-chip Reset circuit is shown in Figure 18-7.

A $\overline{\text{MCLR}}$ noise filter is provided in the $\overline{\text{MCLR}}$ Reset path. The filter detects and ignores small pulses.

Internally generated Resets do not drive $\overline{\text{MCLR}}$ pin low.

FIGURE 18-6: FRC TUNE DITHER LOGIC BLOCK DIAGRAM

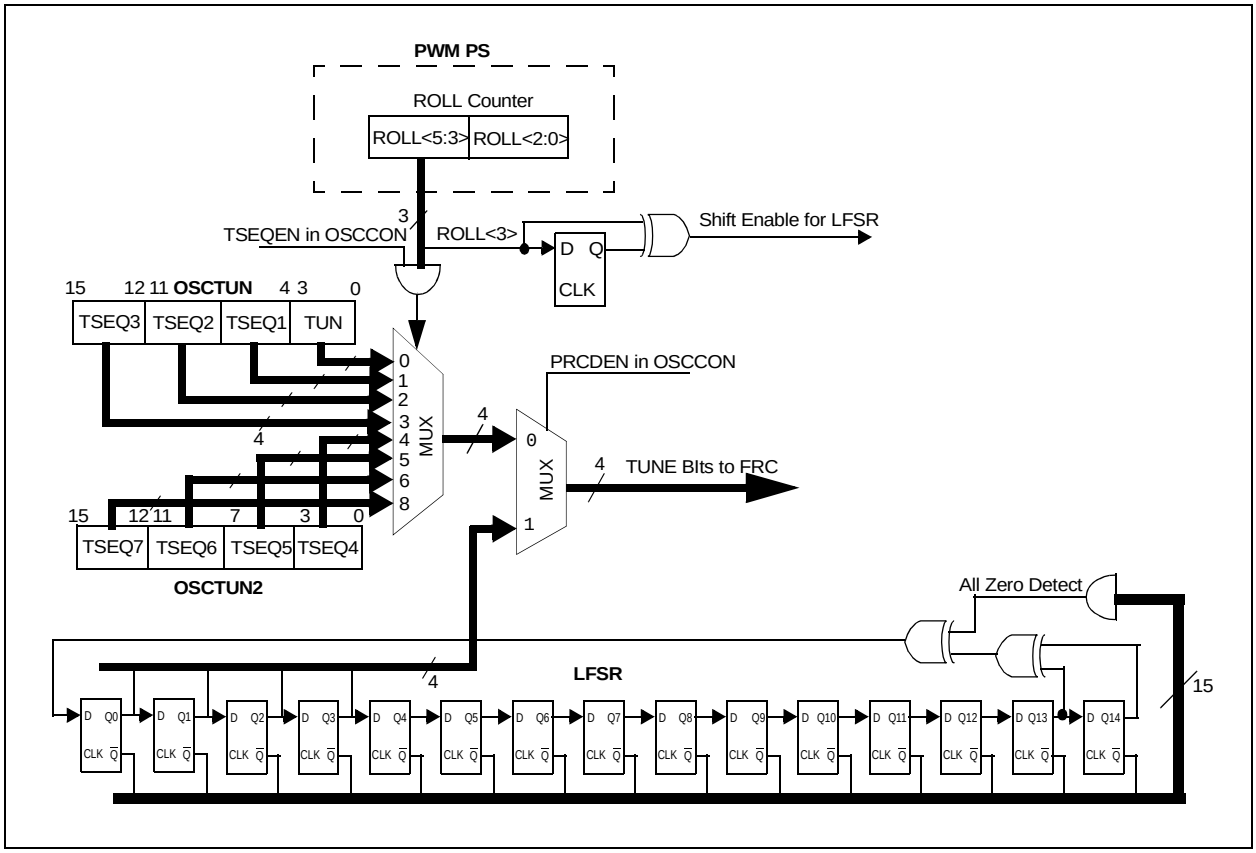

FIGURE 18-7: RESET SYSTEM BLOCK DIAGRAM

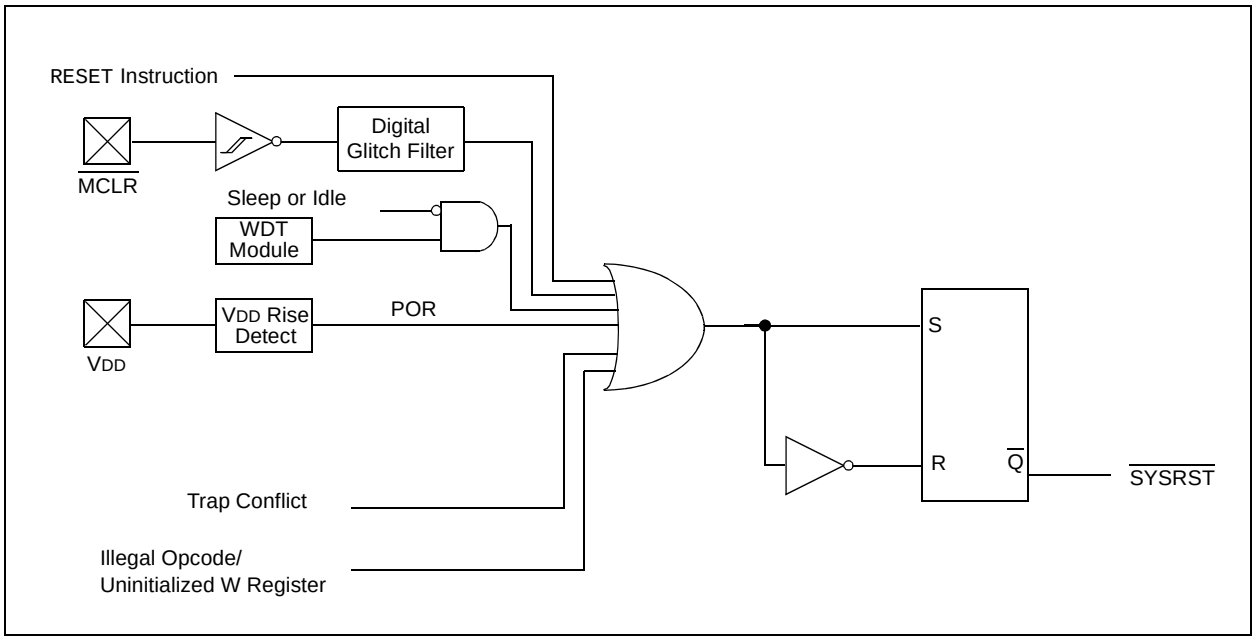

© 2006-2014 Microchip Technology Inc.

18.7.1 POR: POWER-ON RESET

A power-on event will generate an internal POR pulse when a VDD rise is detected. The Reset pulse will occur at the POR circuit threshold voltage (VPOR), which is nominally 1.85V. The device supply voltage characteristics must meet specified starting voltage and rise rate requirements. The POR pulse will reset a POR timer and place the device in the Reset state. The POR also selects the device clock source identified by the oscillator configuration fuses.

The POR circuit inserts a small delay, TPOR, which is nominally 10 μs and ensures that the device bias circuits are stable. Furthermore, a user selected power-up time-out (TPWRT) is applied. The TPWRT parameter is based on Configuration bits and can be 0 ms (no delay), 4 ms, 16 ms or 64 ms. The total delay is at device power-up TPOR + TPWRT. When these delays have expired, $\overline{\text{SYSRST}}$ will be negated on the next leading edge of the Q1 clock, and the PC will jump to the Reset vector.

The timing for the $\overline{\text{SYSRST}}$ signal is shown in Figure 18-8 through Figure 18-10.

FIGURE 18-8: TIME-OUT SEQUENCE ON POWER-UP ($\overline{\text{MCLR}}$ TIED TO VDD)

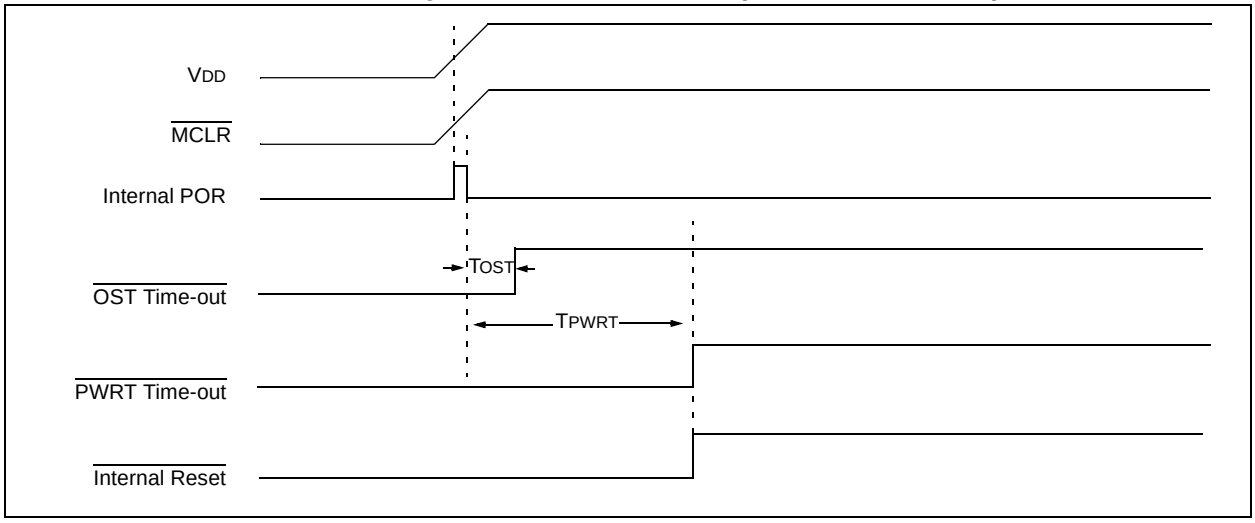

FIGURE 18-9: TIME-OUT SEQUENCE ON POWER-UP ($\overline{\text{MCLR}}$ NOT TIED TO VDD): CASE 1

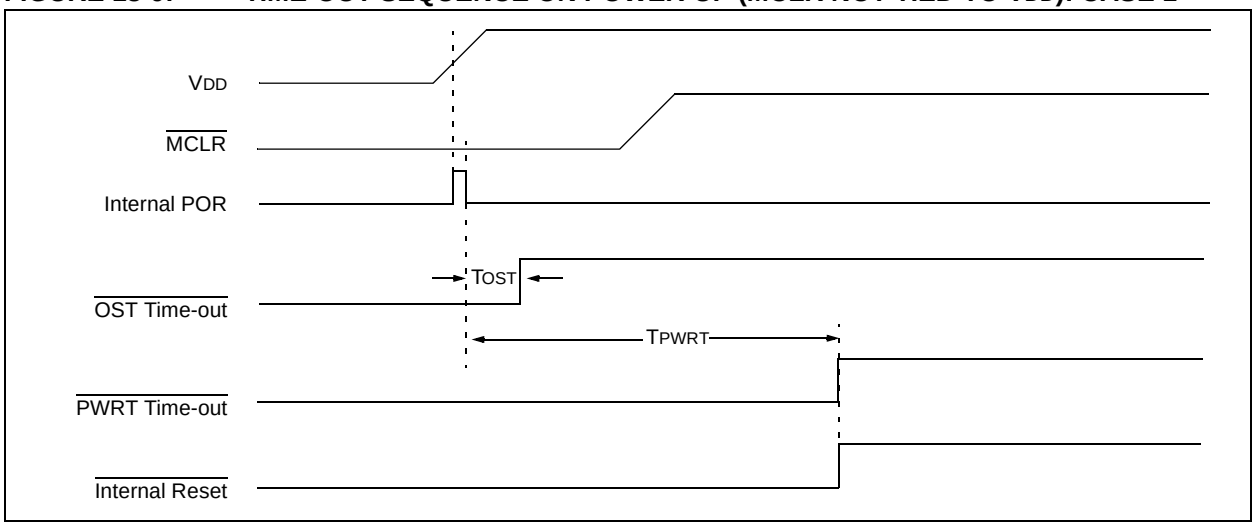

FIGURE 18-10: TIME-OUT SEQUENCE ON POWER-UP ($\overline{MCLR}$ NOT TIED TO V_{DD}): CASE 2

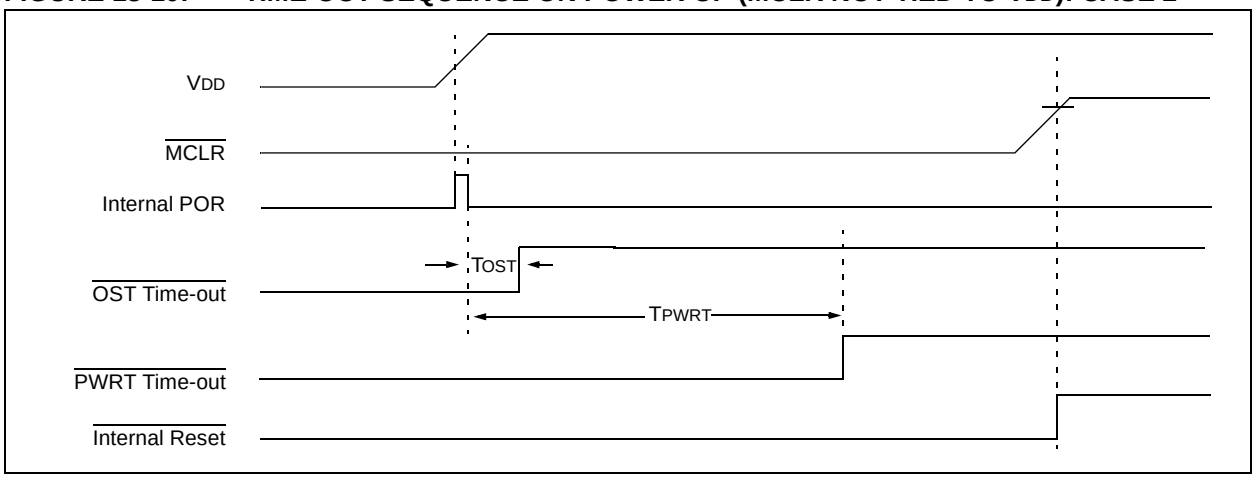

18.7.1.1 POR with Long Crystal Start-up Time (with FSCM Enabled)

The oscillator start-up circuitry is not linked to the POR circuitry. Some crystal circuits (especially low frequency crystals) will have a relatively long start-up time. Therefore, one or more of the following conditions is possible after the POR timer and the PWRT have expired:

- The oscillator circuit has not begun to oscillate.
- The Oscillator Start-up Timer has NOT expired (if a crystal oscillator is used).
- The PLL has not achieved a LOCK (if PLL is used).

If the FSCM is enabled and one of the above conditions is true, then a clock failure trap will occur. The device will automatically switch to the FRC oscillator and the user can switch to the desired crystal oscillator in the trap, ISR.

18.7.1.2 Operating without FSCM and PWRT

If the FSCM is disabled and the Power-up Timer (PWRT) is also disabled, then the device will exit rapidly from Reset on power-up. If the clock source is FRC or EC, it will be active immediately.

If the FSCM is disabled and the system clock has not started, the device will be in a frozen state at the Reset vector until the system clock starts. From the user's perspective, the device will appear to be in Reset until a system clock is available.

FIGURE 18-11: EXTERNAL POWER-ON RESET CIRCUIT (FOR SLOW V_{DD} POWER-UP)

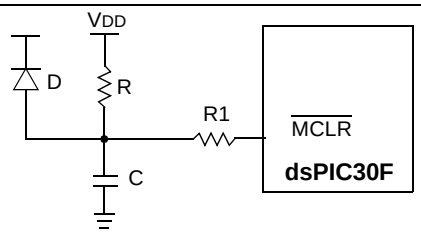

Note 1: External Power-on Reset circuit is required only if the V_{DD} power-up slope is too slow. The diode D helps discharge the capacitor quickly when V_{DD} powers down.

2: R should be suitably chosen so as to make sure that the voltage drop across R does not violate the device's electrical specification.

3: R1 should be suitably chosen so as to limit any current flowing into $\overline{MCLR}$ from external capacitor C, in the event of $\overline{MCLR}/V_{PP}$ pin breakdown due to Electrostatic Discharge (ESD) or Electrical Overstress (EOS).

Note: Dedicated supervisory devices, such as the MCP1XX and MCP8XX, may also be used as an external Power-on Reset circuit.

© 2006-2014 Microchip Technology Inc.

Table 18-3 shows the Reset conditions for the RCON register. Since the control bits within the RCON register are R/W, the information in the table implies that all the bits are negated prior to the action specified in the condition column.

TABLE 18-3: INITIALIZATION CONDITION FOR RCON REGISTER CASE 1

Condition	Program Counter	TRAPR	IOPUWR	EXTR	SWR	WDTO	IDLE	SLEEP	POR
Power-on Reset	0x000000	0	0	0	0	0	0	0	1
$\overline{\text{MCLR}}$ Reset during normal operation	0x000000	0	0	1	0	0	0	0	0
Software Reset during normal operation	0x000000	0	0	0	1	0	0	0	0
$\overline{\text{MCLR}}$ Reset during Sleep	0x000000	0	0	1	0	0	0	1	0
$\overline{\text{MCLR}}$ Reset during Idle	0x000000	0	0	1	0	0	1	0	0
WDT Time-out Reset	0x000000	0	0	0	0	1	0	0	0
WDT Wake-up	PC + 2	0	0	0	0	1	0	1	0
Interrupt Wake-up from Sleep	PC + 2(1)	0	0	0	0	0	0	1	0
Clock Failure Trap	0x000004	0	0	0	0	0	0	0	0
Trap Reset	0x000000	1	0	0	0	0	0	0	0
Illegal Operation Trap	0x000000	0	1	0	0	0	0	0	0

Note 1: When the wake-up is due to an enabled interrupt, the PC is loaded with the corresponding interrupt vector.

Table 18-4 shows a second example of the bit conditions for the RCON register. In this case, it is not assumed the user has set/cleared specific bits prior to action specified in the condition column.

TABLE 18-4: INITIALIZATION CONDITION FOR RCON REGISTER CASE 2

Condition	Program Counter	TRAPR	IOPUWR	EXTR	SWR	WDTO	IDLE	SLEEP	POR
Power-on Reset	0x000000	0	0	0	0	0	0	0	1
$\overline{\text{MCLR}}$ Reset during normal operation	0x000000	u	u	1	0	0	0	0	u
Software Reset during normal operation	0x000000	u	u	0	1	0	0	0	u
$\overline{\text{MCLR}}$ Reset during Sleep	0x000000	u	u	1	u	0	0	1	u
$\overline{\text{MCLR}}$ Reset during Idle	0x000000	u	u	1	u	0	1	0	u
WDT Time-out Reset	0x000000	u	u	0	0	1	0	0	u
WDT Wake-up	PC + 2	u	u	u	u	1	u	1	u
Interrupt Wake-up from Sleep	PC + 2(1)	u	u	u	u	u	u	1	u
Clock Failure Trap	0x000004	u	u	u	u	u	u	u	u
Trap Reset	0x000000	1	u	u	u	u	u	u	u
Illegal Operation Reset	0x000000	u	1	u	u	u	u	u	u

Legend: u = unchanged

Note 1: When the wake-up is due to an enabled interrupt, the PC is loaded with the corresponding interrupt vector.

18.8 Watchdog Timer (WDT)

18.8.1 WATCHDOG TIMER OPERATION

The primary function of the Watchdog Timer (WDT) is to reset the processor in the event of a software malfunction. The WDT is a free-running timer, which runs off an on-chip RC oscillator, requiring no external component. Therefore, the WDT timer will continue to operate even if the main processor clock (e.g., the crystal oscillator) fails.

18.8.2 ENABLING AND DISABLING THE WDT

The Watchdog Timer can be “enabled” or “disabled” only through a Configuration bit (FWDTEN) in the Configuration register FWDT.

Setting FWDTEN = `1` enables the Watchdog Timer. The enabling is done when programming the device. By default, after chip-erase, FWDTEN bit = `1`. Any device programmer capable of programming dsPIC30F devices allows programming of this and other Configuration bits.

If enabled, the WDT will increment until it overflows or “times out”. A WDT time-out will force a device Reset (except during Sleep). To prevent a WDT time-out, the user must clear the Watchdog Timer using a `CLRWDT` instruction.

If a WDT times out during Sleep, the device will wake-up. The WDTO bit in the RCON register will be cleared to indicate a wake-up resulting from a WDT time-out.

Setting FWDTEN = `0` allows user software to enable/disable the Watchdog Timer via the SWDTEN (RCON<5>) control bit.

18.9 Power-Saving Modes

There are two power-saving states that can be entered through the execution of a special instruction, `PWRSAV`.

These are: Sleep and Idle.

The format of the `PWRSAV` instruction is as follows:

`PWRSAV <parameter>`, where ‘`parameter`’ defines Idle or Sleep mode.

18.9.1 SLEEP MODE

In Sleep mode, the clock to the CPU and peripherals is shutdown. If an on-chip oscillator is being used, it is shutdown.

The Fail-Safe Clock Monitor is not functional during Sleep, since there is no clock to monitor. However, LPRC clock remains active if WDT is operational during Sleep.

The processor wakes up from Sleep if at least one of the following conditions has occurred:

- any interrupt that is individually enabled and meets the required priority level
- any Reset (POR and $\overline{\text{MCLR}}$)
- WDT time-out

On waking up from Sleep mode, the processor will restart the same clock that was active prior to entry into Sleep mode. When clock switching is enabled, bits COSC<2:0> will determine the oscillator source that will be used on wake-up. If clock switch is disabled, then there is only one system clock.

Note:	If a POR occurred, the selection of the oscillator is based on the FOSC<2:0> and FOSCSEL<1:0> Configuration bits.

If the clock source is an oscillator, the clock to the device is held off until OST times out (indicating a stable oscillator). If PLL is used, the system clock is held off until LOCK = `1` (indicating that the PLL is stable). Either way, T_{POR}, T_{LOCK} and T_{PWRT} delays are applied.

If EC, FRC, oscillators are used, then a delay of T_{POR} (~10 μs) is applied. This is the smallest delay possible on wake-up from Sleep.

Moreover, if LP oscillator was active during Sleep, and LP is the oscillator used on wake-up, then the start-up delay will be equal to T_{POR}. PWRT delay and OST timer delay are not applied. In order to have the smallest possible start-up delay when waking up from Sleep, one of these faster wake-up options should be selected before entering Sleep.

Any interrupt that is individually enabled (using the corresponding IE bit) and meets the prevailing priority level will be able to wake-up the processor. The processor will process the interrupt and branch to the ISR. The Sleep status bit in the RCON register is set upon wake-up.

Note:	In spite of various delays applied (T_{POR}, T_{LOCK} and T_{PWRT}), the crystal oscillator (and PLL) may not be active at the end of the time-out (e.g., for low frequency crystals). In such cases, if FSCM is enabled, the device will detect this as a clock failure and process the clock failure trap, the FRC oscillator will be enabled, and the user will have to re-enable the crystal oscillator. If FSCM is not enabled, then the device will simply suspend execution of code until the clock is stable, and will remain in Sleep until the oscillator clock has started.

All Resets will wake-up the processor from Sleep mode. Any Reset, other than POR, will set the Sleep status bit. In a POR, the Sleep bit is cleared.

If Watchdog Timer is enabled, then the processor will wake-up from Sleep mode upon WDT time-out. The Sleep and WDTO status bits are both set.

© 2006-2014 Microchip Technology Inc.

18.9.2 IDLE MODE

In Idle mode, the clock to the CPU is shutdown while peripherals keep running. Unlike Sleep mode, the clock source remains active.

Several peripherals have a control bit in each module that allows them to operate during Idle.

LPRC fail-safe clock remains active if clock failure detect is enabled.

The processor wakes up from Idle if at least one of the following conditions is true:

- on any interrupt that is individually enabled (IE bit is ‘1’) and meets the required priority level
- on any Reset (POR, $\overline{\text{MCLR}}$)
- on WDT time-out

Upon wake-up from Idle mode, the clock is reapplied to the CPU and instruction execution begins immediately, starting with the instruction following the `PWRSAV` instruction.

Any interrupt that is individually enabled (using IE bit) and meets the prevailing priority level will be able to wake-up the processor. The processor will process the interrupt and branch to the ISR. The Idle status bit in RCON register is set upon wake-up.

Any Reset, other than POR, will set the Idle status bit. On a POR, the Idle bit is cleared.

If Watchdog Timer is enabled, then the processor will wake-up from Idle mode upon WDT time-out. The Idle and WDTO status bits are both set.

Unlike wake-up from Sleep, there are no time delays involved in wake-up from Idle.

18.10 Device Configuration Registers

The Configuration bits in each device Configuration register specify some of the device modes and are programmed by a device programmer, or by using the In-Circuit Serial Programming (ICSP) feature of the device. Each device Configuration register is a 24-bit register, but only the lower 16 bits of each register are used to hold configuration data. There are six Configuration registers available to the user:

1. FBS (0xF80000): Boot Code Segment Configuration Register
2. FGS (0xF80004): General Code Segment Configuration Register
3. FOSCEL (0xF80006): Oscillator Selection Configuration Register
4. FOSC (0xF80008): Oscillator Configuration Register
5. FWDT (0xF8000A): Watchdog Timer Configuration Register
6. FPOR (0xF8000C): Power-On Reset Configuration Register

The placement of the Configuration bits is automatically handled when you select the device in your device programmer. The desired state of the Configuration bits may be specified in the source code (dependent on the language tool used), or through the programming interface. After the device has been programmed, the application software may read the Configuration bit values through the table read instructions. For additional information, please refer to the programming specifications of the device.

Note:	If the code protection configuration fuse bits (GSS<1:0> and GWRP in the FGS register) have been programmed, an erase of the entire code-protected device is only possible at voltages $V_{DD} \geq 4.5V$.

Table 18-5 shows the bit descriptions of the FGS and FBS registers for the dsPIC30F1010. Table 18-6 shows the bit descriptions of the FGS and FBS registers for dsPIC30F202x devices. Table 18-7 shows the bit descriptions of FWDT and the FPOR registers for dsPIC30F1010/202X devices.

TABLE 18-5: FGS AND FBS BIT DESCRIPTIONS FOR THE dsPIC30F1010

Bit Field	Register	Description
BWRP	FBS	Boot Segment Program Flash Write Protection 1 = Boot segment may be written 0 = Boot segment is write-protected
BSS<2:0>	FBS	Boot Segment Program Flash Code Protection Size x11 = No boot program Flash segment x00 = No boot program Flash segment x01 = No boot program Flash segment 110 = Standard security; small boot segment; boot program Flash segment starts at the end of the Interrupt Vector Segment and ends at 0003FFH 010 = High security; small boot segment; boot program Flash segment starts at the end of the Interrupt Vector Segment and ends at 0003FFH
GRWP	FGS	General Segment Program Flash Write Protection 1 = General segment may be written 0 = General segment is write-protected
GSS<1:0>	FGS	General Segment Program Flash Code Protection 11 = No Protection 10 = Standard security; general program Flash segment starts at the end of the boot segment and ends at the end of program Flash 0x = Reserved

TABLE 18-6: FGS AND FBS BIT DESCRIPTIONS FOR THE dsPIC30F202X

Bit Field	Register	Description
BWRP	FBS	Boot Segment Program Flash Write Protection 1 = Boot segment may be written 0 = Boot segment is write-protected
BSS<2:0>	FBS	Boot Segment Program Flash Code Protection Size x11 = No boot program Flash segment x00 = No boot program Flash segment 110 = Standard security; small boot segment; boot program Flash segment starts at the end of the Interrupt Vector Segment and ends at 0003FFH 010 = High security; small boot segment; boot program Flash segment starts at the end of the Interrupt Vector Segment and ends at 0003FFH 101 = Standard security; medium boot segment; boot program Flash segment starts at the end of the Interrupt Vector Segment and ends at 000FFFH 001 = High security; medium boot segment; boot program Flash segment starts at the end of the Interrupt Vector Segment and ends at 000FFFH
GWRP	FGS	General Segment Program Flash Write Protection 1 = General segment may be written 0 = General segment is write-protected
GSS<1:0>	FGS	General Segment Program Flash Code Protection 11 = No Protection 10 = Standard security; general program Flash segment starts at the end of the Boot Segment and ends at the end of program Flash 0x = Reserved

© 2006-2014 Microchip Technology Inc.

TABLE 18-7: FWDT AND FPOR BIT DESCRIPTIONS FOR dsPIC30F1010/202X

Bit Field	Register	Description
FWDTEN	FWDT	Watchdog Timer Enable bit 1 = Watchdog Timer always enabled. (LPRC oscillator cannot be disabled. Clearing the SWDTEN bit in the RCON register will have no effect.) 0 = Watchdog Timer enabled/disabled by user software (LPRC can be disabled by clearing the SWDTEN bit in the RCON register)
WWDTEN	FWDT	Watchdog Timer Window Enable bit 1 = Watchdog Timer in Non-Window mode 0 = Watchdog Timer in Window mode
WDTPRE	FWDT	Watchdog Timer Prescaler bit 1 = 1:128 0 = 1:32
WDTPOST<3:0>	FWDT	Watchdog Timer Postscaler bits 1111 = 1:32, 768 1110 = 1:16, 384 . . . 0001 = 1:2 0000 = 1:1
FPWRT<2:0>	FPOR	Power-on Reset Timer Value Select bits 111 = PWRT = 128 ms 110 = PWRT = 64 ms 101 = PWRT = 32 ms 100 = PWRT = 16 ms 011 = PWRT = 8 ms 010 = PWRT = 4 ms 001 = PWRT = 2 ms 000 = PWRT = Disabled

18.11 In-Circuit Debugger

When MPLAB® ICD 2 is selected as a debugger, the in-circuit debugging functionality is enabled. This function allows simple debugging functions when used with MPLAB IDE. When the device has this feature enabled, some of the resources are not available for general use. These resources include the first 80 bytes of data RAM and two I/O pins.

One of four pairs of Debug I/O pins may be selected by the user using configuration options in MPLAB IDE. These pin pairs are named EMUD/EMUC, EMUD1/EMUC1 and EMUD2/EMUC2.

In each case, the selected EMUD pin is the Emulation/Debug Data line, and the EMUC pin is the Emulation/Debug Clock line. These pins will interface to the MPLAB ICD 2 module available from Microchip. The selected pair of Debug I/O pins is used by MPLAB ICD 2 to send commands and receive responses, as well as to send and receive data. To use the in-circuit debugging function of the device, the design must implement ICSP connections to $\overline{\text{MCLR}}$, V_{DD}, V_{SS}, PGC, PGD and the selected EMUDx/EMUCx pin pair.

This gives rise to two possibilities:

1. If EMUD/EMUC is selected as the debug I/O pin pair, then only a 5-pin interface is required, as the EMUD and EMUC pin functions are multiplexed with the PGD and PGC pin functions in all dsPIC30F devices.
2. If EMUD1/EMUC1 or EMUD2/EMUC2 is selected as the debug I/O pin pair, then a 7-pin interface is required, as the EMUDx/EMUCx pin functions (x = 1 or 2) are not multiplexed with the PGD and PGC pin functions.

TABLE 18-8: SYSTEM INTEGRATION REGISTER MAP FOR dsPIC30F202X

SFR Name	Addr.	Bit 15	Bit 14	Bit 13	Bit 12	Bit 11	Bit 10	Bit 9	Bit 8	Bit 7	Bit 6	Bit 5	Bit 4	Bit 3	Bit 2	Bit 1	Bit 0	Reset State
RCON	0740	TRAPR	IOPUWR	—	—	—	—	—	—	EXTR	SWR	SWDTEN	WDTO	SLEEP	IDLE	—	POR	Depends on type of Reset.
OSCCON	0742	—	COSC<2:0>			—	NOSC<2:0>			CLKLOCK	—	LOCK	PRCDEN	CF	TSEQEN	—	OSWEN	Depends on Configuration bits.
OSCTUN	0748	TSEQ3<3:0>				TSEQ2<3:0>				TSEQ1<3:0>				TUN<3:0>				0000 0000 0000 0000
OSCTUN2	074A	TSEQ7<3:0>				TSEQ6<3:0>				TSEQ5<3:0>				TSEQ4<3:0>				0000 0000 0000 0000
LFSR	074C	—	LFSR<14:0>															0000 0000 0000 0000
PMD1	0770	—	—	T3MD	T2MD	T1MD	—	PWMMD	—	I2CMD	—	U1MD	—	SPI1MD	—	—	ADCMD	0000 0000 0000 0000
PMD2	0772	—	—	—	—	—	—	—	IC1MD	—	—	—	—	—	—	OC2MD	OC1MD	0000 0000 0000 0000
PMD3	0774	—	—	—	—	CMP_PSMD	—	—	—	—	—	—	—	—	—	—	—	0000 0000 0000 0000

Note: Refer to the "*dsPIC30F Family Reference Manual*" (DS70046) for descriptions of register bit fields.

TABLE 18-9: DEVICE CONFIGURATION REGISTER MAP

File Name	Addr.	Bits 23-16	Bit 15	Bit 14	Bit 13	Bit 12	Bit 11	Bit 10	Bit 9	Bit 8	Bit 7	Bit 6	Bit 5	Bit 4	Bit 3	Bit 2	Bit 1	Bit 0
FBS	F80000	—	—	—	—	—	—	—	—	—	—	—	—	—	BSS<2:0>			BWRP
FGS	F80004	—	—	—	—	—	—	—	—	—	—	—	—	—	—	GSS1	GSS0	GWRP
FOSCSEL	F80006	—	—	—	—	—	—	—	—	—	—	—	—	—	—	—	FNOSC<1:0>	
FOSC	F80008	—	—	—	—	—	—	—	—	—	FCKSM<1:0>		FRANGE	—	—	OSCIOFNC	POSCMD<1:0>	
FWDT	F8000A	—	—	—	—	—	—	—	—	—	FWDTEN	WWDTEN	—	WDTPRE	WDTPOST<3:0>			
FPOR	F8000C	—	—	—	—	—	—	—	—	—	—	—	—	—	—	FPWRT<2:0>		

Note: Refer to the "*dsPIC30F Family Reference Manual*" (DS70046) for descriptions of register bit fields.

© 2006-2014 Microchip Technology Inc.

19.0 INSTRUCTION SET SUMMARY

Note: This data sheet summarizes features of this group of dsPIC30F devices and is not intended to be a complete reference source. For more information on the CPU, peripherals, register descriptions and general device functionality, refer to the "*dsPIC30F Family Reference Manual*" (DS70046). For more information on the device instruction set and programming, refer to the "*dsPIC30F/33F Programmer's Reference Manual*" (DS70157).

The dsPIC30F instruction set adds many enhancements to the previous PIC® MCU instruction sets, while maintaining an easy migration from PIC MCU instruction sets.

Most instructions are a single program memory word (24 bits). Only three instructions require two program memory locations.

Each single-word instruction is a 24-bit word divided into an 8-bit opcode which specifies the instruction type, and one or more operands which further specify the operation of the instruction.

The instruction set is highly orthogonal and is grouped into five basic categories:

- Word or byte-oriented operations
- Bit-oriented operations
- Literal operations
- DSP operations
- Control operations

Table 19-1 shows the general symbols used in describing the instructions.

The dsPIC30F instruction set summary in Table 19-2 lists all the instructions along with the status flags affected by each instruction.

Most word or byte-oriented W register instructions (including barrel shift instructions) have three operands:

- The first source operand, which is typically a register 'Wb' without any address modifier
- The second source operand, which is typically a register 'Ws' with or without an address modifier
- The destination of the result, which is typically a register 'Wd' with or without an address modifier

However, word or byte-oriented file register instructions have two operands:

- The file register specified by the value 'f'
- The destination, which could either be the file register 'f' or the W0 register, which is denoted as 'WREG'

Most bit-oriented instructions (including simple rotate/shift instructions) have two operands:

- The W register (with or without an address modifier) or file register (specified by the value of 'Ws' or 'f')
- The bit in the W register or file register (specified by a literal value, or indirectly by the contents of register 'Wb')

The literal instructions that involve data movement may use some of the following operands:

- A literal value to be loaded into a W register or file register (specified by the value of 'k')
- The W register or file register where the literal value is to be loaded (specified by 'Wb' or 'f')

However, literal instructions that involve arithmetic or logical operations use some of the following operands:

- The first source operand, which is a register 'Wb' without any address modifier
- The second source operand, which is a literal value
- The destination of the result (only if not the same as the first source operand), which is typically a register 'Wd' with or without an address modifier

The `MAC` class of DSP instructions may use some of the following operands:

- The accumulator (A or B) to be used (required operand)
- The W registers to be used as the two operands
- The X and Y address space prefetch operations
- The X and Y address space prefetch destinations
- The accumulator write back destination

The other DSP instructions do not involve any multiplication, and may include:

- The accumulator to be used (required)
- The source or destination operand (designated as Wso or Wdo, respectively) with or without an address modifier
- The amount of shift, specified by a W register 'Wn' or a literal value

The control instructions may use some of the following operands:

- A program memory address
- The mode of the Table Read and Table Write instructions

All instructions are a single word, except for certain double word instructions, which were made double word instructions so that all the required information is available in these 48 bits. In the second word, the 8 MSbs are '`0`'s. If this second word is executed as an instruction (by itself), it will execute as a `NOP`.

Most single-word instructions are executed in a single instruction cycle, unless a conditional test is true or the Program Counter is changed as a result of the instruction. In these cases, the execution takes two instruction cycles with the additional instruction cycle(s) executed as a NOP. Notable exceptions are the BRA (unconditional/computed branch), indirect CALL/GOTO, all Table Reads and Writes and RETURN/RETFIE instructions, which are single-word instructions, but take two or three cycles. Certain instructions that involve skipping over the subsequent instruction, require either two or three cycles if the skip is performed, depending on whether the instruction being skipped is a single-word or two-word instruction. Moreover, double word moves require two cycles. The double word instructions execute in two instruction cycles.

Note: For more details on the instruction set, refer to the "*dsPIC30F/33F Programmer's Reference Manual*" (DS70157).

TABLE 19-1: SYMBOLS USED IN OPCODE DESCRIPTIONS

Field	Description
#text	Means literal defined by "text"
(text)	Means "content of text"
[text]	Means "the location addressed by text"
{ }	Optional field or operation
<n:m>	Register bit field
.b	Byte mode selection
.d	Double Word mode selection
.S	Shadow register select
.w	Word mode selection (default)
Acc	One of two accumulators {A, B}
AWB	Accumulator write back destination address register ∈ {W13, [W13] + = 2}
bit4	4-bit bit selection field (used in word addressed instructions) ∈ {0...15}
C, DC, N, OV, Z	MCU Status bits: Carry, Digit Carry, Negative, Overflow, Zero
Expr	Absolute address, label or expression (resolved by the linker)
f	File register address ∈ {0x0000...0x1FFF}
lit1	1-bit unsigned literal ∈ {0,1}
lit4	4-bit unsigned literal ∈ {0...15}
lit5	5-bit unsigned literal ∈ {0...31}
lit8	8-bit unsigned literal ∈ {0...255}
lit10	10-bit unsigned literal ∈ {0...255} for Byte mode, {0:1023} for Word mode
lit14	14-bit unsigned literal ∈ {0...16384}
lit16	16-bit unsigned literal ∈ {0...65535}
lit23	23-bit unsigned literal ∈ {0...8388608}; LSB must be '0'
None	Field does not require an entry, may be blank
OA, OB, SA, SB	DSP Status bits: ACCA Overflow, ACCB Overflow, ACCA Saturate, ACCB Saturate
PC	Program Counter
Slit10	10-bit signed literal ∈ {-512...511}
Slit16	16-bit signed literal ∈ {-32768...32767}
Slit6	6-bit signed literal ∈ {-16...16}

© 2006-2014 Microchip Technology Inc.

TABLE 19-1: SYMBOLS USED IN OPCODE DESCRIPTIONS (CONTINUED)

Field	Description
Wb	Base W register ∈ {W0..W15}
Wd	Destination W register ∈ { Wd, [Wd], [Wd++], [Wd--], [++Wd], [--Wd] }
Wdo	Destination W register ∈ { Wnd, [Wnd], [Wnd++], [Wnd--], [++Wnd], [--Wnd], [Wnd+Wb] }
Wm,Wn	Dividend, Divisor working register pair (direct addressing)
Wm*Wm	Multiplicand and Multiplier working register pair for Square instructions ∈ {W4 * W4,W5 * W5,W6 * W6,W7 * W7}
Wm*Wn	Multiplicand and Multiplier working register pair for DSP instructions ∈ {W4 * W5,W4 * W6,W4 * W7,W5 * W6,W5 * W7,W6 * W7}
Wn	One of 16 working registers ∈ {W0..W15}
Wnd	One of 16 destination working registers ∈ {W0..W15}
Wns	One of 16 source working registers ∈ {W0..W15}
WREG	W0 (working register used in file register instructions)
Ws	Source W register ∈ { Ws, [Ws], [Ws++], [Ws--], [++Ws], [--Ws] }
Wso	Source W register ∈ { Wns, [Wns], [Wns++], [Wns--], [++Wns], [--Wns], [Wns+Wb] }
Wx	X data space prefetch address register for DSP instructions ∈ {[W8] + = 6, [W8] + = 4, [W8] + = 2, [W8], [W8] – = 6, [W8] – = 4, [W8] – = 2, [W9] + = 6, [W9] + = 4, [W9] + = 2, [W9], [W9] – = 6, [W9] – = 4, [W9] – = 2, [W9 + W12],none}
Wxd	X data space prefetch destination register for DSP instructions ∈ {W4..W7}
Wy	Y data space prefetch address register for DSP instructions ∈ {[W10] + = 6, [W10] + = 4, [W10] + = 2, [W10], [W10] - = 6, [W10] - = 4, [W10] - = 2, [W11] + = 6, [W11] + = 4, [W11] + = 2, [W11], [W11] – = 6, [W11] – = 4, [W11] – = 2, [W11 + W12], none}
Wyd	Y data space prefetch destination register for DSP instructions ∈ {W4..W7}

TABLE 19-2: INSTRUCTION SET OVERVIEW

Base Instr #	Assembly Mnemonic	Assembly Syntax		Description	# of words	# of cycles	Status Flags Affected
1	ADD	ADD	Acc	Add Accumulators	1	1	OA,OB,SA,SB
		ADD	f	f = f + WREG	1	1	C,DC,N,OV,Z
		ADD	f,WREG	WREG = f + WREG	1	1	C,DC,N,OV,Z
		ADD	#lit10,Wn	Wd = lit10 + Wd	1	1	C,DC,N,OV,Z
		ADD	Wb,Ws,Wd	Wd = Wb + Ws	1	1	C,DC,N,OV,Z
		ADD	Wb,#lit5,Wd	Wd = Wb + lit5	1	1	C,DC,N,OV,Z
		ADD	Wso,#Slit4,Acc	16-bit Signed Add to Accumulator	1	1	OA,OB,SA,SB
2	ADDC	ADDC	f	f = f + WREG + (C)	1	1	C,DC,N,OV,Z
		ADDC	f,WREG	WREG = f + WREG + (C)	1	1	C,DC,N,OV,Z
		ADDC	#lit10,Wn	Wd = lit10 + Wd + (C)	1	1	C,DC,N,OV,Z
		ADDC	Wb,Ws,Wd	Wd = Wb + Ws + (C)	1	1	C,DC,N,OV,Z
		ADDC	Wb,#lit5,Wd	Wd = Wb + lit5 + (C)	1	1	C,DC,N,OV,Z
3	AND	AND	f	f = f .AND. WREG	1	1	N,Z
		AND	f,WREG	WREG = f .AND. WREG	1	1	N,Z
		AND	#lit10,Wn	Wd = lit10 .AND. Wd	1	1	N,Z
		AND	Wb,Ws,Wd	Wd = Wb .AND. Ws	1	1	N,Z
		AND	Wb,#lit5,Wd	Wd = Wb .AND. lit5	1	1	N,Z
4	ASR	ASR	f	f = Arithmetic Right Shift f	1	1	C,N,OV,Z
		ASR	f,WREG	WREG = Arithmetic Right Shift f	1	1	C,N,OV,Z
		ASR	Ws,Wd	Wd = Arithmetic Right Shift Ws	1	1	C,N,OV,Z
		ASR	Wb,Wns,Wnd	Wnd = Arithmetic Right Shift Wb by Wns	1	1	N,Z
		ASR	Wb,#lit5,Wnd	Wnd = Arithmetic Right Shift Wb by lit5	1	1	N,Z
5	BCLR	BCLR	f,#bit4	Bit Clear f	1	1	None
		BCLR	Ws,#bit4	Bit Clear Ws	1	1	None
6	BRA	BRA	C,Expr	Branch if Carry	1	1 (2)	None
		BRA	GE,Expr	Branch if greater than or equal	1	1 (2)	None
		BRA	GEU,Expr	Branch if unsigned greater than or equal	1	1 (2)	None
		BRA	GT,Expr	Branch if greater than	1	1 (2)	None
		BRA	GTU,Expr	Branch if unsigned greater than	1	1 (2)	None
		BRA	LE,Expr	Branch if less than or equal	1	1 (2)	None
		BRA	LEU,Expr	Branch if unsigned less than or equal	1	1 (2)	None
		BRA	LT,Expr	Branch if less than	1	1 (2)	None
		BRA	LTU,Expr	Branch if unsigned less than	1	1 (2)	None
		BRA	N,Expr	Branch if Negative	1	1 (2)	None
		BRA	NC,Expr	Branch if Not Carry	1	1 (2)	None
		BRA	NN,Expr	Branch if Not Negative	1	1 (2)	None
		BRA	NOV,Expr	Branch if Not Overflow	1	1 (2)	None
		BRA	NZ,Expr	Branch if Not Zero	1	1 (2)	None
		BRA	OA,Expr	Branch if accumulator A overflow	1	1 (2)	None
		BRA	OB,Expr	Branch if accumulator B overflow	1	1 (2)	None
		BRA	OV,Expr	Branch if Overflow	1	1 (2)	None
		BRA	SA,Expr	Branch if accumulator A saturated	1	1 (2)	None
		BRA	SB,Expr	Branch if accumulator B saturated	1	1 (2)	None
		BRA	Expr	Branch Unconditionally	1	2	None
		BRA	Z,Expr	Branch if Zero	1	1 (2)	None
		BRA	Wn	Computed Branch	1	2	None
7	BSET	BSET	f,#bit4	Bit Set f	1	1	None
		BSET	Ws,#bit4	Bit Set Ws	1	1	None
8	BSW	BSW.C	Ws,Wb	Write C bit to Ws<Wb>	1	1	None
		BSW.Z	Ws,Wb	Write Z bit to Ws<Wb>	1	1	None
9	BTG	BTG	f,#bit4	Bit Toggle f	1	1	None
		BTG	Ws,#bit4	Bit Toggle Ws	1	1	None
10	BTSC	BTSC	f,#bit4	Bit Test f, Skip if Clear	1	1 (2 or 3)	None
		BTSC	Ws,#bit4	Bit Test Ws, Skip if Clear	1	1 (2 or 3)	None

© 2006-2014 Microchip Technology Inc.

TABLE 19-2: INSTRUCTION SET OVERVIEW (CONTINUED)

Base Instr #	Assembly Mnemonic	Assembly Syntax		Description	# of words	# of cycles	Status Flags Affected
11	BTSS	BTSS	f,#bit4	Bit Test f, Skip if Set	1	1 (2 or 3)	None
		BTSS	Ws,#bit4	Bit Test Ws, Skip if Set	1	1 (2 or 3)	None
12	BTST	BTST	f,#bit4	Bit Test f	1	1	Z
		BTST.C	Ws,#bit4	Bit Test Ws to C	1	1	C
		BTST.Z	Ws,#bit4	Bit Test Ws to Z	1	1	Z
		BTST.C	Ws,Wb	Bit Test Ws<Wb> to C	1	1	C
		BTST.Z	Ws,Wb	Bit Test Ws<Wb> to Z	1	1	Z
13	BTSTS	BTSTS	f,#bit4	Bit Test then Set f	1	1	Z
		BTSTS.C	Ws,#bit4	Bit Test Ws to C, then Set	1	1	C
		BTSTS.Z	Ws,#bit4	Bit Test Ws to Z, then Set	1	1	Z
14	CALL	CALL	lit23	Call subroutine	2	2	None
		CALL	Wn	Call indirect subroutine	1	2	None
15	CLR	CLR	f	f = 0x0000	1	1	None
		CLR	WREG	WREG = 0x0000	1	1	None
		CLR	Ws	Ws = 0x0000	1	1	None
		CLR	Acc,Wx,Wxd,Wy,Wyd,AWB	Clear Accumulator	1	1	OA,OB,SA,SB
16	CLRWDT	CLRWDT		Clear Watchdog Timer	1	1	WDTO,Sleep
17	COM	COM	f	$f = \overline{f}$	1	1	N,Z
		COM	f,WREG	$WREG = \overline{f}$	1	1	N,Z
		COM	Ws,Wd	$Wd = \overline{Ws}$	1	1	N,Z
18	CP	CP	f	Compare f with WREG	1	1	C,DC,N,OV,Z
		CP	Wb,#lit5	Compare Wb with lit5	1	1	C,DC,N,OV,Z
		CP	Wb,Ws	Compare Wb with Ws (Wb – Ws)	1	1	C,DC,N,OV,Z
19	CP0	CP0	f	Compare f with 0x0000	1	1	C,DC,N,OV,Z
		CP0	Ws	Compare Ws with 0x0000	1	1	C,DC,N,OV,Z
20	CPB	CPB	f	Compare f with WREG, with Borrow	1	1	C,DC,N,OV,Z
		CPB	Wb,#lit5	Compare Wb with lit5, with Borrow	1	1	C,DC,N,OV,Z
		CPB	Wb,Ws	Compare Wb with Ws, with Borrow ($Wb – Ws – \overline{C}$)	1	1	C,DC,N,OV,Z
21	CPSEQ	CPSEQ	Wb, Wn	Compare Wb with Wn, skip if =	1	1 (2 or 3)	None
22	CPSGT	CPSGT	Wb, Wn	Compare Wb with Wn, skip if >	1	1 (2 or 3)	None
23	CPSLT	CPSLT	Wb, Wn	Compare Wb with Wn, skip if <	1	1 (2 or 3)	None
24	CPSNE	CPSNE	Wb, Wn	Compare Wb with Wn, skip if ≠	1	1 (2 or 3)	None
25	DAW	DAW	Wn	Wn = decimal adjust Wn	1	1	C
26	DEC	DEC	f	f = f –1	1	1	C,DC,N,OV,Z
		DEC	f,WREG	WREG = f –1	1	1	C,DC,N,OV,Z
		DEC	Ws,Wd	Wd = Ws – 1	1	1	C,DC,N,OV,Z
27	DEC2	DEC2	f	f = f –2	1	1	C,DC,N,OV,Z
		DEC2	f,WREG	WREG = f – 2	1	1	C,DC,N,OV,Z
		DEC2	Ws,Wd	Wd = Ws – 2	1	1	C,DC,N,OV,Z
28	DISI	DISI	#lit14	Disable Interrupts for k instruction cycles	1	1	None
29	DIV	DIV.S	Wm,Wn	Signed 16/16-bit Integer Divide	1	18	N,Z,C, OV
		DIV.SD	Wm,Wn	Signed 32/16-bit Integer Divide	1	18	N,Z,C, OV
		DIV.U	Wm,Wn	Unsigned 16/16-bit Integer Divide	1	18	N,Z,C, OV
		DIV.UD	Wm,Wn	Unsigned 32/16-bit Integer Divide	1	18	N,Z,C, OV
30	DIVF	DIVF	Wm,Wn	Signed 16/16-bit Fractional Divide	1	18	N,Z,C, OV
31	DO	DO	#lit14,Expr	Do code to PC + Expr, lit14 + 1 times	2	2	None
		DO	Wn,Expr	Do code to PC + Expr, (Wn) + 1 times	2	2	None
32	ED	ED	Wm * Wm,Acc,Wx,Wy,Wxd	Euclidean Distance (no accumulate)	1	1	OA,OB,OAB, SA,SB,SAB
33	EDAC	EDAC	Wm * Wm,Acc,Wx,Wy,Wxd	Euclidean Distance	1	1	OA,OB,OAB, SA,SB,SAB

TABLE 19-2: INSTRUCTION SET OVERVIEW (CONTINUED)

Base Instr #	Assembly Mnemonic	Assembly Syntax	Description	# of words	# of cycles	Status Flags Affected
34	EXCH	EXCH Wns,Wnd	Swap Wns with Wnd	1	1	None
35	FBCL	FBCL Ws,Wnd	Find Bit Change from Left (MSb) Side	1	1	C
36	FF1L	FF1L Ws,Wnd	Find First One from Left (MSb) Side	1	1	C
37	FF1R	FF1R Ws,Wnd	Find First One from Right (LSb) Side	1	1	C
38	GOTO	GOTO Expr	Go to address	2	2	None
		GOTO Wn	Go to indirect	1	2	None
39	INC	INC f	f = f + 1	1	1	C,DC,N,OV,Z
		INC f,WREG	WREG = f + 1	1	1	C,DC,N,OV,Z
		INC Ws,Wd	Wd = Ws + 1	1	1	C,DC,N,OV,Z
40	INC2	INC2 f	f = f + 2	1	1	C,DC,N,OV,Z
		INC2 f,WREG	WREG = f + 2	1	1	C,DC,N,OV,Z
		INC2 Ws,Wd	Wd = Ws + 2	1	1	C,DC,N,OV,Z
41	IOR	IOR f	f = f .IOR. WREG	1	1	N,Z
		IOR f,WREG	WREG = f .IOR. WREG	1	1	N,Z
		IOR #lit10,Wn	Wd = lit10 .IOR. Wd	1	1	N,Z
		IOR Wb,Ws,Wd	Wd = Wb .IOR. Ws	1	1	N,Z
		IOR Wb,#lit5,Wd	Wd = Wb .IOR. lit5	1	1	N,Z
42	LAC	LAC Wso,#Slit4,Acc	Load Accumulator	1	1	OA,OB,OAB, SA,SB,SAB
43	LNK	LNK #lit14	Link frame pointer	1	1	None
44	LSR	LSR f	f = Logical Right Shift f	1	1	C,N,OV,Z
		LSR f,WREG	WREG = Logical Right Shift f	1	1	C,N,OV,Z
		LSR Ws,Wd	Wd = Logical Right Shift Ws	1	1	C,N,OV,Z
		LSR Wb,Wns,Wnd	Wnd = Logical Right Shift Wb by Wns	1	1	N,Z
		LSR Wb,#lit5,Wnd	Wnd = Logical Right Shift Wb by lit5	1	1	N,Z
45	MAC	MAC Wm * Wn,Acc,Wx,Wxd,Wy,Wyd, AWB	Multiply and Accumulate	1	1	OA,OB,OAB, SA,SB,SAB
		MAC Wm * Wm,Acc,Wx,Wxd,Wy,Wyd	Square and Accumulate	1	1	OA,OB,OAB, SA,SB,SAB
46	MOV	MOV f,Wn	Move f to Wn	1	1	None
		MOV f	Move f to f	1	1	N,Z
		MOV f,WREG	Move f to WREG	1	1	N,Z
		MOV #lit16,Wn	Move 16-bit literal to Wn	1	1	None
		MOV.b #lit8,Wn	Move 8-bit literal to Wn	1	1	None
		MOV Wn,f	Move Wn to f	1	1	None
		MOV Wso,Wdo	Move Ws to Wd	1	1	None
		MOV WREG,f	Move WREG to f	1	1	N,Z
		MOV.D Wns,Wd	Move Double from W(ns):W(ns + 1) to Wd	1	2	None
		MOV.D Ws,Wnd	Move Double from Ws to W(nd + 1):W(nd)	1	2	None
47	MOVSAC	MOVSAC Acc,Wx,Wxd,Wy,Wyd,AWB	Prefetch and store accumulator	1	1	None
48	MPY	MPY Wm * Wn,Acc,Wx,Wxd,Wy,Wyd	Multiply Wm by Wn to Accumulator	1	1	OA,OB,OAB, SA,SB,SAB
		MPY Wm * Wm,Acc,Wx,Wxd,Wy,Wyd	Square Wm to Accumulator	1	1	OA,OB,OAB, SA,SB,SAB
49	MPY.N	MPY.N Wm * Wn,Acc,Wx,Wxd,Wy,Wyd	-(Multiply Wm by Wn) to Accumulator	1	1	None
50	MSC	MSC Wm * Wm,Acc,Wx,Wxd,Wy,Wyd, AWB	Multiply and Subtract from Accumulator	1	1	OA,OB,OAB, SA,SB,SAB
51	MUL	MUL.SS Wb,Ws,Wnd	{Wnd + 1, Wnd} = signed(Wb) * signed(Ws)	1	1	None
		MUL.SU Wb,Ws,Wnd	{Wnd + 1, Wnd} = signed(Wb) * unsigned(Ws)	1	1	None
		MUL.US Wb,Ws,Wnd	{Wnd + 1, Wnd} = unsigned(Wb) * signed(Ws)	1	1	None
		MUL.UU Wb,Ws,Wnd	{Wnd + 1, Wnd} = unsigned(Wb) * unsigned(Ws)	1	1	None
		MUL.SU Wb,#lit5,Wnd	{Wnd + 1, Wnd} = signed(Wb) * unsigned(lit5)	1	1	None
		MUL.UU Wb,#lit5,Wnd	{Wnd + 1, Wnd} = unsigned(Wb) * unsigned(lit5)	1	1	None
		MUL f	W3:W2 = f * WREG	1	1	None

© 2006-2014 Microchip Technology Inc.

TABLE 19-2: INSTRUCTION SET OVERVIEW (CONTINUED)

Base Instr #	Assembly Mnemonic	Assembly Syntax		Description	# of words	# of cycles	Status Flags Affected
52	NEG	NEG	Acc	Negate Accumulator	1	1	OA,OB,OAB, SA,SB,SAB
		NEG	f	f = $\overline{f}$ + 1	1	1	C,DC,N,OV,Z
		NEG	f,WREG	WREG = $\overline{f}$ + 1	1	1	C,DC,N,OV,Z
		NEG	Ws,Wd	Wd = $\overline{Ws}$ + 1	1	1	C,DC,N,OV,Z
53	NOP	NOP		No Operation	1	1	None
		NOPR		No Operation	1	1	None
54	POP	POP	f	Pop f from Top-of-Stack (TOS)	1	1	None
		POP	Wdo	Pop from Top-of-Stack (TOS) to Wdo	1	1	None
		POP.D	Wnd	Pop from Top-of-Stack (TOS) to W(nd):W(nd + 1)	1	2	None
		POP.S		Pop Shadow Registers	1	1	All
55	PUSH	PUSH	f	Push f to Top-of-Stack (TOS)	1	1	None
		PUSH	Wso	Push Wso to Top-of-Stack (TOS)	1	1	None
		PUSH.D	Wns	Push W(ns):W(ns + 1) to Top-of-Stack (TOS)	1	2	None
		PUSH.S		Push Shadow Registers	1	1	None
56	PWRSAV	PWRSAV	#lit1	Go into Sleep or Idle mode	1	1	WDTO,Sleep
57	RCALL	RCALL	Expr	Relative Call	1	2	None
		RCALL	Wn	Computed Call	1	2	None
58	REPEAT	REPEAT	#lit14	Repeat Next Instruction lit14 + 1 times	1	1	None
		REPEAT	Wn	Repeat Next Instruction (Wn) + 1 times	1	1	None
59	RESET	RESET		Software device Reset	1	1	None
60	RETFIE	RETFIE		Return from interrupt	1	3 (2)	None
61	RETLW	RETLW	#lit10,Wn	Return with literal in Wn	1	3 (2)	None
62	RETURN	RETURN		Return from Subroutine	1	3 (2)	None
63	RLC	RLC	f	f = Rotate Left through Carry f	1	1	C,N,Z
		RLC	f,WREG	WREG = Rotate Left through Carry f	1	1	C,N,Z
		RLC	Ws,Wd	Wd = Rotate Left through Carry Ws	1	1	C,N,Z
64	RLNC	RLNC	f	f = Rotate Left (No Carry) f	1	1	N,Z
		RLNC	f,WREG	WREG = Rotate Left (No Carry) f	1	1	N,Z
		RLNC	Ws,Wd	Wd = Rotate Left (No Carry) Ws	1	1	N,Z
65	RRC	RRC	f	f = Rotate Right through Carry f	1	1	C,N,Z
		RRC	f,WREG	WREG = Rotate Right through Carry f	1	1	C,N,Z
		RRC	Ws,Wd	Wd = Rotate Right through Carry Ws	1	1	C,N,Z
66	RRNC	RRNC	f	f = Rotate Right (No Carry) f	1	1	N,Z
		RRNC	f,WREG	WREG = Rotate Right (No Carry) f	1	1	N,Z
		RRNC	Ws,Wd	Wd = Rotate Right (No Carry) Ws	1	1	N,Z
67	SAC	SAC	Acc,#Slit4,Wdo	Store Accumulator	1	1	None
		SAC.R	Acc,#Slit4,Wdo	Store Rounded Accumulator	1	1	None
68	SE	SE	Ws,Wnd	Wnd = sign extended Ws	1	1	C,N,Z
69	SETM	SETM	f	f = 0xFFFF	1	1	None
		SETM	WREG	WREG = 0xFFFF	1	1	None
		SETM	Ws	Ws = 0xFFFF	1	1	None
70	SFTAC	SFTAC	Acc,Wn	Arithmetic Shift Accumulator by (Wn)	1	1	OA,OB,OAB, SA,SB,SAB
		SFTAC	Acc,#Slit6	Arithmetic Shift Accumulator by Slit6	1	1	OA,OB,OAB, SA,SB,SAB
71	SL	SL	f	f = Left Shift f	1	1	C,N,OV,Z
		SL	f,WREG	WREG = Left Shift f	1	1	C,N,OV,Z
		SL	Ws,Wd	Wd = Left Shift Ws	1	1	C,N,OV,Z
		SL	Wb,Wns,Wnd	Wnd = Left Shift Wb by Wns	1	1	N,Z
		SL	Wb,#lit5,Wnd	Wnd = Left Shift Wb by lit5	1	1	N,Z

TABLE 19-2: INSTRUCTION SET OVERVIEW (CONTINUED)

Base Instr #	Assembly Mnemonic	Assembly Syntax		Description	# of words	# of cycles	Status Flags Affected
72	SUB	SUB	Acc	Subtract Accumulators	1	1	OA,OB,OAB, SA,SB,SAB
		SUB	f	f = f – WREG	1	1	C,DC,N,OV,Z
		SUB	f,WREG	WREG = f – WREG	1	1	C,DC,N,OV,Z
		SUB	#lit10,Wn	Wn = Wn – lit10	1	1	C,DC,N,OV,Z
		SUB	Wb,Ws,Wd	Wd = Wb – Ws	1	1	C,DC,N,OV,Z
		SUB	Wb,#lit5,Wd	Wd = Wb – lit5	1	1	C,DC,N,OV,Z
73	SUBB	SUBB	f	f = f – WREG – ($\overline{C}$)	1	1	C,DC,N,OV,Z
		SUBB	f,WREG	WREG = f – WREG – ($\overline{C}$)	1	1	C,DC,N,OV,Z
		SUBB	#lit10,Wn	Wn = Wn – lit10 – ($\overline{C}$)	1	1	C,DC,N,OV,Z
		SUBB	Wb,Ws,Wd	Wd = Wb – Ws – ($\overline{C}$)	1	1	C,DC,N,OV,Z
		SUBB	Wb,#lit5,Wd	Wd = Wb – lit5 – ($\overline{C}$)	1	1	C,DC,N,OV,Z
74	SUBR	SUBR	f	f = WREG – f	1	1	C,DC,N,OV,Z
		SUBR	f,WREG	WREG = WREG – f	1	1	C,DC,N,OV,Z
		SUBR	Wb,Ws,Wd	Wd = Ws – Wb	1	1	C,DC,N,OV,Z
		SUBR	Wb,#lit5,Wd	Wd = lit5 – Wb	1	1	C,DC,N,OV,Z
75	SUBBR	SUBBR	f	f = WREG – f – ($\overline{C}$)	1	1	C,DC,N,OV,Z
		SUBBR	f,WREG	WREG = WREG – f – ($\overline{C}$)	1	1	C,DC,N,OV,Z
		SUBBR	Wb,Ws,Wd	Wd = Ws – Wb – ($\overline{C}$)	1	1	C,DC,N,OV,Z
		SUBBR	Wb,#lit5,Wd	Wd = lit5 – Wb – ($\overline{C}$)	1	1	C,DC,N,OV,Z
76	SWAP	SWAP.b	Wn	Wn = nibble swap Wn	1	1	None
		SWAP	Wn	Wn = byte swap Wn	1	1	None
77	TBLRDH	TBLRDH	Ws,Wd	Read Prog<23:16> to Wd<7:0>	1	2	None
78	TBLRDL	TBLRDL	Ws,Wd	Read Prog<15:0> to Wd	1	2	None
79	TBLWTH	TBLWTH	Ws,Wd	Write Ws<7:0> to Prog<23:16>	1	2	None
80	TBLWTL	TBLWTL	Ws,Wd	Write Ws to Prog<15:0>	1	2	None
81	ULNK	ULNK		Unlink frame pointer	1	1	None
82	XOR	XOR	f	f = f .XOR. WREG	1	1	N,Z
		XOR	f,WREG	WREG = f .XOR. WREG	1	1	N,Z
		XOR	#lit10,Wn	Wd = lit10 .XOR. Wd	1	1	N,Z
		XOR	Wb,Ws,Wd	Wd = Wb .XOR. Ws	1	1	N,Z
		XOR	Wb,#lit5,Wd	Wd = Wb .XOR. lit5	1	1	N,Z
83	ZE	ZE	Ws,Wnd	Wnd = Zero-Extend Ws	1	1	C,Z,N

© 2006-2014 Microchip Technology Inc.

20.0 DEVELOPMENT SUPPORT

The PIC® microcontrollers (MCU) and dsPIC® digital signal controllers (DSC) are supported with a full range of software and hardware development tools:

- Integrated Development Environment
  - MPLAB® X IDE Software
- Compilers/Assemblers/Linkers
  - MPLAB XC Compiler
  - MPASM™ Assembler
  - MPLINK™ Object Linker/ MPLIB™ Object Librarian
  - MPLAB Assembler/Linker/Librarian for Various Device Families
- Simulators
  - MPLAB X SIM Software Simulator
- Emulators
  - MPLAB REAL ICE™ In-Circuit Emulator
- In-Circuit Debuggers/Programmers
  - MPLAB ICD 3
  - PICkit™ 3
- Device Programmers
  - MPLAB PM3 Device Programmer
- Low-Cost Demonstration/Development Boards, Evaluation Kits and Starter Kits
- Third-party development tools

20.1 MPLAB X Integrated Development Environment Software

The MPLAB X IDE is a single, unified graphical user interface for Microchip and third-party software, and hardware development tool that runs on Windows®, Linux and Mac OS® X. Based on the NetBeans IDE, MPLAB X IDE is an entirely new IDE with a host of free software components and plug-ins for high-performance application development and debugging. Moving between tools and upgrading from software simulators to hardware debugging and programming tools is simple with the seamless user interface.

With complete project management, visual call graphs, a configurable watch window and a feature-rich editor that includes code completion and context menus, MPLAB X IDE is flexible and friendly enough for new users. With the ability to support multiple tools on multiple projects with simultaneous debugging, MPLAB X IDE is also suitable for the needs of experienced users.

Feature-Rich Editor:

- Color syntax highlighting
- Smart code completion makes suggestions and provides hints as you type
- Automatic code formatting based on user-defined rules
- Live parsing

User-Friendly, Customizable Interface:

- Fully customizable interface: toolbars, toolbar buttons, windows, window placement, etc.
- Call graph window

Project-Based Workspaces:

- Multiple projects
- Multiple tools
- Multiple configurations
- Simultaneous debugging sessions

File History and Bug Tracking:

- Local file history feature
- Built-in support for Bugzilla issue tracker

20.2 MPLAB XC Compilers

The MPLAB XC Compilers are complete ANSI C compilers for all of Microchip's 8, 16 and 32-bit MCU and DSC devices. These compilers provide powerful integration capabilities, superior code optimization and ease of use. MPLAB XC Compilers run on Windows, Linux or MAC OS X.

For easy source level debugging, the compilers provide debug information that is optimized to the MPLAB X IDE.

The free MPLAB XC Compiler editions support all devices and commands, with no time or memory restrictions, and offer sufficient code optimization for most applications.

MPLAB XC Compilers include an assembler, linker and utilities. The assembler generates relocatable object files that can then be archived or linked with other relocatable object files and archives to create an executable file. MPLAB XC Compiler uses the assembler to produce its object file. Notable features of the assembler include:

- Support for the entire device instruction set
- Support for fixed-point and floating-point data
- Command-line interface
- Rich directive set
- Flexible macro language
- MPLAB X IDE compatibility

20.3 MPASM Assembler

The MPASM Assembler is a full-featured, universal macro assembler for PIC10/12/16/18 MCUs.

The MPASM Assembler generates relocatable object files for the MPLINK Object Linker, Intel® standard HEX files, MAP files to detail memory usage and symbol reference, absolute LST files that contain source lines and generated machine code, and COFF files for debugging.

The MPASM Assembler features include:

- Integration into MPLAB X IDE projects
- User-defined macros to streamline assembly code
- Conditional assembly for multipurpose source files
- Directives that allow complete control over the assembly process

20.4 MPLINK Object Linker/ MPLIB Object Librarian

The MPLINK Object Linker combines relocatable objects created by the MPASM Assembler. It can link relocatable objects from precompiled libraries, using directives from a linker script.

The MPLIB Object Librarian manages the creation and modification of library files of precompiled code. When a routine from a library is called from a source file, only the modules that contain that routine will be linked in with the application. This allows large libraries to be used efficiently in many different applications.

The object linker/library features include:

- Efficient linking of single libraries instead of many smaller files
- Enhanced code maintainability by grouping related modules together
- Flexible creation of libraries with easy module listing, replacement, deletion and extraction

20.5 MPLAB Assembler, Linker and Librarian for Various Device Families

MPLAB Assembler produces relocatable machine code from symbolic assembly language for PIC24, PIC32 and dsPIC DSC devices. MPLAB XC Compiler uses the assembler to produce its object file. The assembler generates relocatable object files that can then be archived or linked with other relocatable object files and archives to create an executable file. Notable features of the assembler include:

- Support for the entire device instruction set
- Support for fixed-point and floating-point data
- Command-line interface
- Rich directive set
- Flexible macro language
- MPLAB X IDE compatibility

© 2006-2014 Microchip Technology Inc.

20.6 MPLAB X SIM Software Simulator

The MPLAB X SIM Software Simulator allows code development in a PC-hosted environment by simulating the PIC MCUs and dsPIC DSCs on an instruction level. On any given instruction, the data areas can be examined or modified and stimuli can be applied from a comprehensive stimulus controller. Registers can be logged to files for further run-time analysis. The trace buffer and logic analyzer display extend the power of the simulator to record and track program execution, actions on I/O, most peripherals and internal registers.

The MPLAB X SIM Software Simulator fully supports symbolic debugging using the MPLAB XC Compilers, and the MPASM and MPLAB Assemblers. The software simulator offers the flexibility to develop and debug code outside of the hardware laboratory environment, making it an excellent, economical software development tool.

20.7 MPLAB REAL ICE In-Circuit Emulator System

The MPLAB REAL ICE In-Circuit Emulator System is Microchip's next generation high-speed emulator for Microchip Flash DSC and MCU devices. It debugs and programs all 8, 16 and 32-bit MCU, and DSC devices with the easy-to-use, powerful graphical user interface of the MPLAB X IDE.

The emulator is connected to the design engineer's PC using a high-speed USB 2.0 interface and is connected to the target with either a connector compatible with in-circuit debugger systems (RJ-11) or with the new high-speed, noise tolerant, Low-Voltage Differential Signal (LVDS) interconnection (CAT5).

The emulator is field upgradable through future firmware downloads in MPLAB X IDE. MPLAB REAL ICE offers significant advantages over competitive emulators including full-speed emulation, run-time variable watches, trace analysis, complex breakpoints, logic probes, a ruggedized probe interface and long (up to three meters) interconnection cables.

20.8 MPLAB ICD 3 In-Circuit Debugger System

The MPLAB ICD 3 In-Circuit Debugger System is Microchip's most cost-effective, high-speed hardware debugger/programmer for Microchip Flash DSC and MCU devices. It debugs and programs PIC Flash microcontrollers and dsPIC DSCs with the powerful, yet easy-to-use graphical user interface of the MPLAB IDE.

The MPLAB ICD 3 In-Circuit Debugger probe is connected to the design engineer's PC using a high-speed USB 2.0 interface and is connected to the target with a connector compatible with the MPLAB ICD 2 or MPLAB REAL ICE systems (RJ-11). MPLAB ICD 3 supports all MPLAB ICD 2 headers.

20.9 PICkit 3 In-Circuit Debugger/ Programmer

The MPLAB PICkit 3 allows debugging and programming of PIC and dsPIC Flash microcontrollers at a most affordable price point using the powerful graphical user interface of the MPLAB IDE. The MPLAB PICkit 3 is connected to the design engineer's PC using a full-speed USB interface and can be connected to the target via a Microchip debug (RJ-11) connector (compatible with MPLAB ICD 3 and MPLAB REAL ICE). The connector uses two device I/O pins and the Reset line to implement in-circuit debugging and In-Circuit Serial Programming™ (ICSP™).

20.10 MPLAB PM3 Device Programmer

The MPLAB PM3 Device Programmer is a universal, CE compliant device programmer with programmable voltage verification at V_{DDMIN} and V_{DDMAX} for maximum reliability. It features a large LCD display (128 x 64) for menus and error messages, and a modular, detachable socket assembly to support various package types. The ICSP cable assembly is included as a standard item. In Stand-Alone mode, the MPLAB PM3 Device Programmer can read, verify and program PIC devices without a PC connection. It can also set code protection in this mode. The MPLAB PM3 connects to the host PC via an RS-232 or USB cable. The MPLAB PM3 has high-speed communications and optimized algorithms for quick programming of large memory devices, and incorporates an MMC card for file storage and data applications.

© 2006-2014 Microchip Technology Inc.

20.11 Demonstration/Development Boards, Evaluation Kits and Starter Kits

A wide variety of demonstration, development and evaluation boards for various PIC MCUs and dsPIC DSCs allows quick application development on fully functional systems. Most boards include prototyping areas for adding custom circuitry and provide application firmware and source code for examination and modification.

The boards support a variety of features, including LEDs, temperature sensors, switches, speakers, RS-232 interfaces, LCD displays, potentiometers and additional EEPROM memory.

The demonstration and development boards can be used in teaching environments, for prototyping custom circuits and for learning about various microcontroller applications.

In addition to the PICDEM™ and dsPICDEM™ demonstration/development board series of circuits, Microchip has a line of evaluation kits and demonstration software for analog filter design, KEELOQ® security ICs, CAN, IrDA®, PowerSmart battery management, SEEVAL® evaluation system, Sigma-Delta ADC, flow rate sensing, plus many more.

Also available are starter kits that contain everything needed to experience the specified device. This usually includes a single application and debug capability, all on one board.

Check the Microchip web page (www.microchip.com) for the complete list of demonstration, development and evaluation kits.

20.12 Third-Party Development Tools

Microchip also offers a great collection of tools from third-party vendors. These tools are carefully selected to offer good value and unique functionality.

- Device Programmers and Gang Programmers from companies, such as SoftLog and CCS
- Software Tools from companies, such as Gimpel and Trace Systems
- Protocol Analyzers from companies, such as Saleae and Total Phase
- Demonstration Boards from companies, such as MikroElektronika, Digilent® and Olimex
- Embedded Ethernet Solutions from companies, such as EZ Web Lynx, WIZnet and IPLogika®

© 2006-2014 Microchip Technology Inc.

21.0 ELECTRICAL CHARACTERISTICS

This section provides an overview of dsPIC30F electrical characteristics. Additional information will be provided in future revisions of this document as it becomes available.

For detailed information about the dsPIC30F architecture and core, refer to "*dsPIC30F Family Reference Manual*" (DS70046).

Absolute maximum ratings for the device family are listed below. Exposure to these maximum rating conditions for extended periods may affect device reliability. Functional operation of the device at these or any other conditions above the parameters indicated in the operation listings of this specification is not implied.

Absolute Maximum Ratings(†)

Ambient temperature under bias ..... -40°C to +125°C
Storage temperature ..... -65°C to +150°C
Voltage on any pin with respect to V_{SS} (except V_{DD} and $\overline{MCLR}$)(1) ..... -0.3V to (V_{DD} + 0.3V)
Voltage on V_{DD} with respect to V_{SS} ..... -0.3V to +5.5V
Voltage on $\overline{MCLR}$ with respect to V_{SS}(1) ..... -0.3V to (V_{DD} + 0.3V)
Maximum current out of V_{SS} pin ..... 300 mA
Maximum current into V_{DD} pin(2) ..... 300 mA
Input clamp current, I_{IK} (V_I < 0 or V_I > V_{DD}) ..... ±20 mA
Output clamp current, I_{OK} (V_O < 0 or V_O > V_{DD}) ..... ±20 mA
Maximum output current sunk by any I/O pin ..... 25 mA
Maximum output current sourced by any I/O pin ..... 25 mA
Maximum current sunk by all ports ..... 200 mA
Maximum current sourced by all ports(2) ..... 200 mA

Note 1: Voltage spikes below V_{SS} at the $\overline{MCLR}$/V_{PP} pin, inducing currents greater than 80 mA, may cause latch-up. Thus, a series resistor of 50-100Ω should be used when applying a "low" level to the $\overline{MCLR}$/V_{PP} pin, rather than pulling this pin directly to V_{SS}.

2: Maximum allowable current is a function of device maximum power dissipation. See Table 21-2.

†NOTICE: Stresses above those listed under "Absolute Maximum Ratings" may cause permanent damage to the device. This is a stress rating only and functional operation of the device at those or any other conditions above those indicated in the operation listings of this specification is not implied. Exposure to maximum rating conditions for extended periods may affect device reliability.

21.1 DC Characteristics

TABLE 21-1: OPERATING MIPS VS. VOLTAGE

V_{DD} Range	Temp Range	Max MIPS	
		dsPIC30FXXX-30I	dsPIC30FXXX-20E
4.5-5.5V	-40°C to +85°C	30	—
4.5-5.5V	-40°C to +125°C	—	20
3.0-3.6V	-40°C to +85°C	20	—
3.0-3.6V	-40°C to +125°C	—	15

TABLE 21-2: THERMAL OPERATING CONDITIONS

Rating	Symbol	Min	Typ	Max	Unit
dsPIC30F1010/202X-30I					
Operating Junction Temperature Range	T_J	-40	—	+125	°C
Operating Ambient Temperature Range	T_A	-40	—	+85	°C
dsPIC30F1010/202X-20E					
Operating Junction Temperature Range	T_J	-40	—	+150	°C
Operating Ambient Temperature Range	T_A	-40	—	+125	°C
Power Dissipation: Internal Chip Power Dissipation: $P_{INT} = V_{DD} \times (I_{DD} - \sum I_{OH})$ I/O Pin Power Dissipation: $P_{I/O} = \sum (\{V_{DD} - V_{OH}\} \times I_{OH}) + \sum (V_{OL} \times I_{OL})$	P_D	$P_{INT} + P_{I/O}$			W
Maximum Allowed Power Dissipation	P_{DMAX}	$(T_J - T_A)/\theta_{JA}$			W

TABLE 21-3: THERMAL PACKAGING CHARACTERISTICS

Characteristic	Symbol	Typ	Max	Unit	Notes
Package Thermal Resistance, 28-pin SOIC (SO)	θ_{JA}	48.3	—	°C/W	**1, 2**
Package Thermal Resistance, 28-pin QFN	θ_{JA}	33.7	—	°C/W	**1, 2**
Package Thermal Resistance, 28-pin SPDIP (SP)	θ_{JA}	42	—	°C/W	**1, 2**
Package Thermal Resistance, 44-pin QFN	θ_{JA}	28	—	°C/W	**1, 2**
Package Thermal Resistance, 44-pin TQFP	θ_{JA}	39.3	—	°C/W	**1, 2**

Note 1: Junction to ambient thermal resistance, Theta-ja (θ_{JA}) numbers are achieved by package simulations.

2: Depending on operating conditions, air flow may be required for improved thermal performance.

TABLE 21-4: DC TEMPERATURE AND VOLTAGE SPECIFICATIONS

DC CHARACTERISTICS			**Standard Operating Conditions: 3.3V and 5.0V (±10%) (unless otherwise stated)** Operating temperature -40°C ≤ T_A ≤ +85°C for Industrial -40°C ≤ T_A ≤ +125°C for Extended				
Param No.	**Symbol**	**Characteristic**	**Min**	**Typ(1)**	**Max**	**Units**	**Conditions**
Operating Voltage(2)							
DC10	V_{DD}	**Supply Voltage**	3.0	—	5.5	V	Industrial temperature
DC11	V_{DD}	**Supply Voltage**	3.0	—	5.5	V	Extended temperature
DC12	V_{DR}	**RAM Data Retention Voltage(3)**	—	1.5	—	V	
DC16	V_{POR}	**V_{DD} Start Voltage** to Ensure Internal Power-on Reset signal	—	V_{SS}	—	V	
DC17	S_{VDD}	**V_{DD} Rise Rate** to Ensure Internal Power-on Reset signal	0.05	—	—	V/ms	0-5V in 0.1 sec, 0-3.3V in 60 ms

Note 1: Data in “Typ” column is at 5V, +25°C unless otherwise stated. Parameters are for design guidance only and are not tested.

2: These parameters are characterized but not tested in manufacturing.

3: This is the limit to which V_{DD} can be lowered without losing RAM data.

© 2006-2014 Microchip Technology Inc.

TABLE 21-5: DC CHARACTERISTICS: OPERATING CURRENT (I_{DD})

DC CHARACTERISTICS			Standard Operating Conditions: 3.3V and 5.0V (±10%) (unless otherwise stated) Operating temperature -40°C ≤ TA ≤ +85°C for Industrial -40°C ≤ TA ≤ +125°C for Extended			
Parameter No.	**Typical(1)**	**Max**	**Units**	**Conditions**		
Operating Current (I_{DD})(2)						
DC20a	13	16	mA	+25°C	3.3V	FRC 3.2 MIPS, PLL disabled
DC20b	14	16	mA	+85°C		
DC20c	14	17	mA	+125°C		
DC20d	22	26	mA	+25°C	5V	
DC20e	22	26	mA	+85°C		
DC20f	22	27	mA	+125°C		
DC22a	19	22	mA	+25°C	3.3V	FRC, 4.9 MIPS, PLL disabled
DC22b	19	23	mA	+85°C		
DC22c	19	23	mA	+125°C		
DC22d	30	36	mA	+25°C	5V	
DC22e	30	37	mA	+85°C		
DC22f	31	37	mA	+125°C		
DC23a	27	33	mA	+25°C	3.3V	FRC, 7.3 MIPS, PLL disabled
DC23b	28	33	mA	+85°C		
DC23c	28	34	mA	+125°C		
DC23d	44	53	mA	+25°C	5V	
DC23e	45	53	mA	+85°C		
DC23f	45	54	mA	+125°C		
DC24a	66	79	mA	+25°C	3.3V	FRC 13 MIPS, PLL enabled
DC24b	67	80	mA	+85°C		
DC24c	68	81	mA	+125°C		
DC24d	108	129	mA	+25°C	5V	
DC24e	109	130	mA	+85°C		
DC24f	110	131	mA	+125°C		
DC26a	98	118	mA	+25°C	3.3V	FRC 20 MIPS, PLL enabled
DC26b	99	118	mA	+85°C		
DC26d	159	191	mA	+25°C	5V	
DC26e	160	192	mA	+85°C		
DC26f	161	193	mA	+125°C		
DC27d	222	267	mA	+25°C	5V	FRC, 30 MIPS, PLL enabled
DC27e	223	267	mA	+85°C		

Note 1: Data in “Typical” column is at 5V, +25°C unless otherwise stated. Parameters are for design guidance only and are not tested.

2: The supply current is mainly a function of the operating voltage and frequency. Other factors such as I/O pin loading and switching rate, oscillator type, internal code execution pattern and temperature also have an impact on the current consumption. The test conditions for all I_{DD} measurements are as follows:
- All I/O pins are configured as Outputs and pulled to V_{SS}.
- MCLR = V_{DD}, WDT and FSCM are disabled.
- CPU, SRAM, Program Memory and Data Memory are operational.
- No peripheral modules are operating.

TABLE 21-5: DC CHARACTERISTICS: OPERATING CURRENT (I_{DD}) (CONTINUED)

DC CHARACTERISTICS			Standard Operating Conditions: 3.3V and 5.0V (±10%) (unless otherwise stated) Operating temperature -40°C ≤ TA ≤ +85°C for Industrial -40°C ≤ TA ≤ +125°C for Extended			
Parameter No.	**Typical(1)**	**Max**	**Units**	**Conditions**		
Operating Current (I_{DD})(2)						
DC28a	96	116	mA	+25°C	3.3V	EC, 20 MIPS, PLL enabled
DC28b	97	116	mA	+85°C		
DC28d	157	188	mA	+25°C	5V	
DC28e	158	189	mA	+85°C		
DE28f	159	191	mA	+125°C		
DC29d	227	273	mA	+25°C	5V	EC, 30 MIPS, PLL enabled
DC29e	228	273	mA	+85°C		

Note 1: Data in “Typical” column is at 5V, +25°C unless otherwise stated. Parameters are for design guidance only and are not tested.

2: The supply current is mainly a function of the operating voltage and frequency. Other factors such as I/O pin loading and switching rate, oscillator type, internal code execution pattern and temperature also have an impact on the current consumption. The test conditions for all I_{DD} measurements are as follows:
- All I/O pins are configured as Outputs and pulled to V_{SS}.
- $\overline{MCLR}$ = V_{DD}, WDT and FSCM are disabled.
- CPU, SRAM, Program Memory and Data Memory are operational.
- No peripheral modules are operating.

© 2006-2014 Microchip Technology Inc.

TABLE 21-6: DC CHARACTERISTICS: IDLE CURRENT (I_{IDLE})

DC CHARACTERISTICS			Standard Operating Conditions: 3.3V and 5.0V (±10%) (unless otherwise stated) Operating temperature -40°C ≤ TA ≤ +85°C for Industrial -40°C ≤ TA ≤ +125°C for Extended			
Parameter No.	**Typical(1)**	**Max**	**Units**	**Conditions**		
Idle Current (I_{IDLE}): Core Off Clock On Base Current(2)						
DC40a	8	9	mA	+25°C	3.3V	FRC, 3.2 MIPS, PLL disabled
DC40b	8	9	mA	+85°C		
DC40c	8	10	mA	+125°C		
DC40d	12	15	mA	+25°C	5V	
DC40e	13	15	mA	+85°C		
DC40f	13	16	mA	+125°C		
DC42a	10	12	mA	+25°C	3.3V	FRC, 4.9 MIPS, PLL disabled
DC42b	11	13	mA	+85°C		
DC42c	11	13	mA	+125°C		
DC42d	17	20	mA	+25°C	5V	
DC42e	17	21	mA	+85°C		
DC42f	18	21	mA	+125°C		
DC43a	15	18	mA	+25°C	3.3V	FRC, 7.3 MIPS, PLL disabled
DC43b	15	18	mA	+85°C		
DC43c	15	18	mA	+125°C		
DC43d	24	29	mA	+25°C	5V	
DC43e	24	29	mA	+85°C		
DC43f	25	30	mA	+125°C		
DC44a	44	53	mA	+25°C	3.3V	FRC, 13 MIPS, PLL enabled
DC44b	45	54	mA	+85°C		
DC44c	46	55	mA	+125°C		
DC44d	72	87	mA	+25°C	5V	
DC44e	73	88	mA	+85°C		
DC44f	74	89	mA	+125°C		
DC46a	66	79	mA	+25°C	3.3V	FRC 20 MIPS, PLL enabled
DC46b	67	80	mA	+85°C		
DC46d	108	129	mA	+25°C	5V	
DC46e	109	131	mA	+85°C		
DC45f	110	132	mA	+125°C		
DC47d	152	182	mA	+25°C	5V	FRC, 30 MIPS, PLL enabled
DC47e	153	183	mA	+85°C		

Note 1: Data in “Typical” column is at 5V, +25°C unless otherwise stated. Parameters are for design guidance only and are not tested.

2: Base I_{IDLE} current is measured with core off, clock on and all modules turned off. All I/Os are configured as inputs and pulled high. WDT, etc. are all switched off.

TABLE 21-6: DC CHARACTERISTICS: IDLE CURRENT (I_{IDLE}) (CONTINUED)

DC CHARACTERISTICS			Standard Operating Conditions: 3.3V and 5.0V (±10%) (unless otherwise stated) Operating temperature -40°C ≤ TA ≤ +85°C for Industrial -40°C ≤ TA ≤ +125°C for Extended			
Parameter No.	**Typical(1)**	**Max**	**Units**	**Conditions**		
Idle Current (I_{IDLE}): Core Off Clock On Base Current(2)						
DC48a	65	78	mA	+25°C	3.3V	EC, 20 MIPS, PLL enabled
DC48b	66	79	mA	+85°C		
DC48d	105	127	mA	+25°C	5V	
DC48e	107	128	mA	+85°C		
DC48f	108	130	mA	+125°C		
DC49d	155	186	mA	+25°C	5V	EC, 30 MIPS, PLL enabled
DC49e	156	187	mA	+85°C		

Note 1: Data in “Typical” column is at 5V, +25°C unless otherwise stated. Parameters are for design guidance only and are not tested.

2: Base I_{IDLE} current is measured with core off, clock on and all modules turned off. All I/Os are configured as inputs and pulled high. WDT, etc. are all switched off.

© 2006-2014 Microchip Technology Inc.

TABLE 21-7: DC CHARACTERISTICS: POWER-DOWN CURRENT (I_{PD})

DC CHARACTERISTICS			Standard Operating Conditions: 3.3V and 5.0V (±10%) (unless otherwise stated) Operating temperature -40°C ≤ TA ≤ +85°C for Industrial -40°C ≤ TA ≤ +125°C for Extended			
Parameter No.	**Typical(1)**	**Max**	**Units**	**Conditions**		
Power-Down Current (I_{PD})						
DC60a	1.2	2.4	mA	+25°C	3.3V	Base Power-Down Current(2)
DC60b	1.2	2.4	mA	+85°C		
DC60c	1.3	2.6	mA	+125°C		
DC60e	2.1	4.2	mA	+25°C	5V	
DC60f	2.1	4.2	mA	+85°C		
DC60g	2.3	4.6	mA	+125°C		
DC61a	15	30	μA	+25°C	3.3V	Watchdog Timer Current: ΔI_{WDT}(3)
DC61b	14	30	μA	+85°C		
DC61c	14	30	μA	+125°C		
DC61e	30	60	μA	+25°C	5V	
DC61f	29	60	μA	+85°C		
DC61g	30	60	μA	+125°C		

Note 1: Data in the Typical column is at 5V, +25°C unless otherwise stated. Parameters are for design guidance only and are not tested.

2: Base I_{PD} is measured with all peripherals and clocks shutdown. All I/Os are configured as inputs and pulled high. WDT, etc., are all switched off.

3: The Δ current is the additional current consumed when the module is enabled. This current should be added to the base I_{PD} current.

TABLE 21-8: DC CHARACTERISTICS: I/O PIN INPUT SPECIFICATIONS

DC CHARACTERISTICS			Standard Operating Conditions: 3.3V and 5.0V (±10%) (unless otherwise stated) Operating temperature -40°C ≤ TA ≤ +85°C for Industrial -40°C ≤ TA ≤ +125°C for Extended				
Param No.	**Symbol**	**Characteristic**	**Min**	**Typ(1)**	**Max**	**Units**	**Conditions**
	VIL	**Input Low Voltage(2)**					
DI10		I/O Pins: with Schmitt Trigger Buffer	VSS	—	0.2 VDD	V	
DI15		$\overline{\text{MCLR}}$	VSS	—	0.2 VDD	V	
DI16		OSC1 (in HS mode)	VSS	—	0.2 VDD	V	
DI18		SDA, SCL	VSS	—	0.3 VDD	V	SMbus disabled
DI19		SDA, SCL	VSS	—	0.2 VDD	V	SMbus enabled
	VIH	**Input High Voltage(2)**					
DI20		I/O Pins: with Schmitt Trigger Buffer	0.8 VDD	—	VDD	V	
DI25		$\overline{\text{MCLR}}$	0.8 VDD	—	VDD	V	
DI26		OSC1 (in HS mode)	0.7 VDD	—	VDD	V	
DI28		SDA, SCL	0.7 VDD	—	VDD	V	SMbus disabled
DI29		SDA, SCL	0.8 VDD	—	VDD	V	SMbus enabled
	IIL	**Input Leakage Current(2,3,4)**					
DI50		I/O Ports	—	0.01	±1	μA	VSS ≤ VPIN ≤ VDD, Pin at high-impedance
DI51		Analog Input Pins	—	0.50	—	μA	VSS ≤ VPIN ≤ VDD, Pin at high-impedance
DI55		$\overline{\text{MCLR}}$	—	0.05	±5	μA	VSS ≤ VPIN ≤ VDD
DI56		OSC1	—	0.05	±5	μA	VSS ≤ VPIN ≤ VDD, HS Oscillator mode

Note 1: Data in “Typ” column is at 5V, +25°C unless otherwise stated. Parameters are for design guidance only and are not tested.

2: These parameters are characterized but not tested in manufacturing.

3: The leakage current on the $\overline{\text{MCLR}}$ pin is strongly dependent on the applied voltage level. The specified levels represent normal operating conditions. Higher leakage current may be measured at different input voltages.

4: Negative current is defined as current sourced by the pin.

© 2006-2014 Microchip Technology Inc.

TABLE 21-9: DC CHARACTERISTICS: I/O PIN OUTPUT SPECIFICATIONS

DC CHARACTERISTICS			Standard Operating Conditions: 3.3V and 5.0V (±10%) (unless otherwise stated) Operating temperature -40°C ≤ TA ≤ +85°C for Industrial -40°C ≤ TA ≤ +125°C for Extended				
Param No.	**Symbol**	**Characteristic**	**Min**	**Typ(1)**	**Max**	**Units**	**Conditions**
	VOL	**Output Low Voltage(2)**					
DO10		I/O Ports	—	—	0.6	V	IOL = 8.5 mA, VDD = 5V
			—	—	TBD	V	IOL = 2.0 mA, VDD = 3.3V
DO16		OSC2/CLKO	—	—	0.6	V	IOL = 1.6 mA, VDD = 5V
		(RC or EC Oscillator mode)	—	—	TBD	V	IOL = 2.0 mA, VDD = 3.3V
	VOH	**Output High Voltage(2)**					
DO20		I/O Ports	VDD – 0.7	—	—	V	IOH = -3.0 mA, VDD = 5V
			TBD	—	—	V	IOH = -2.0 mA, VDD = 3.3V
DO26		OSC2/CLKO	VDD – 0.7	—	—	V	IOH = -1.3 mA, VDD = 5V
		(RC or EC Oscillator mode)	TBD	—	—	V	IOH = -2.0 mA, VDD = 3.3V
		Capacitive Loading Specs on Output Pins(2)					
DO50	COSC2	OSC2 Pin	—	—	15	pF	In HS mode when external clock is used to drive OSC1
DO56	CIO	All I/O Pins and OSC2	—	—	50	pF	RC or EC Oscillator mode
DO58	CB	SCL, SDA	—	—	400	pF	In I^2C mode

Legend: TBD = To Be Determined

Note 1: Data in “Typ” column is at 5V, +25°C unless otherwise stated. Parameters are for design guidance only and are not tested.

2: These parameters are characterized but not tested in manufacturing.

TABLE 21-10: DC CHARACTERISTICS: PROGRAM AND EEPROM

DC CHARACTERISTICS			Standard Operating Conditions: 3.3V and 5.0V (±10%) (unless otherwise stated) Operating temperature -40°C ≤ TA ≤ +85°C for Industrial -40°C ≤ TA ≤ +125°C for Extended				
Param No.	**Symbol**	**Characteristic**	**Min**	**Typ(1)**	**Max**	**Units**	**Conditions**
		Program Flash Memory(2)					
D130	EP	Cell Endurance	10K	100K	—	E/W	
D131	VPR	VDD for Read	VMIN	—	5.5	V	VMIN = Minimum operating voltage
D132	VEB	VDD for Bulk Erase	4.5	—	5.5	V	
D133	VPEW	VDD for Erase/Write	3.0	—	5.5	V	
D134	TPEW	Erase/Write Cycle Time	—	2	—	ms	
D135	TRETD	Characteristic Retention	40	100	—	Year	Provided no other specifications are violated
D136	TEB	ICSP Block Erase Time	—	4	—	ms	
D137	IPEW	IDD During Programming	—	10	30	mA	Row erase
D138	IEB	IDD During Programming	—	10	30	mA	Bulk erase

Note 1: Data in “Typ” column is at 5V, +25°C unless otherwise stated.

2: These parameters are characterized but not tested in manufacturing.

21.2 AC Characteristics and Timing Parameters

The information contained in this section defines dsPIC30F AC characteristics and timing parameters.

TABLE 21-11: TEMPERATURE AND VOLTAGE SPECIFICATIONS – AC

AC CHARACTERISTICS	**Standard Operating Conditions: 3.3V and 5.0V (±10%) (unless otherwise stated)** Operating temperature -40°C ≤ TA ≤ +85°C for Industrial -40°C ≤ TA ≤ +125°C for Extended Operating voltage VDD range as described in DC Spec Section 21.0.

FIGURE 21-1: LOAD CONDITIONS FOR DEVICE TIMING SPECIFICATIONS

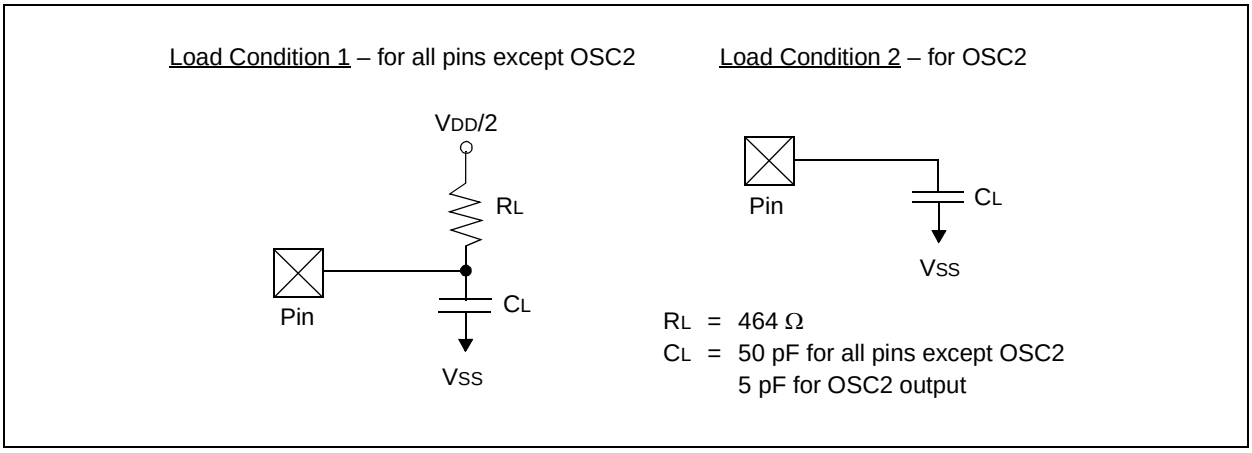

FIGURE 21-2: EXTERNAL CLOCK TIMING

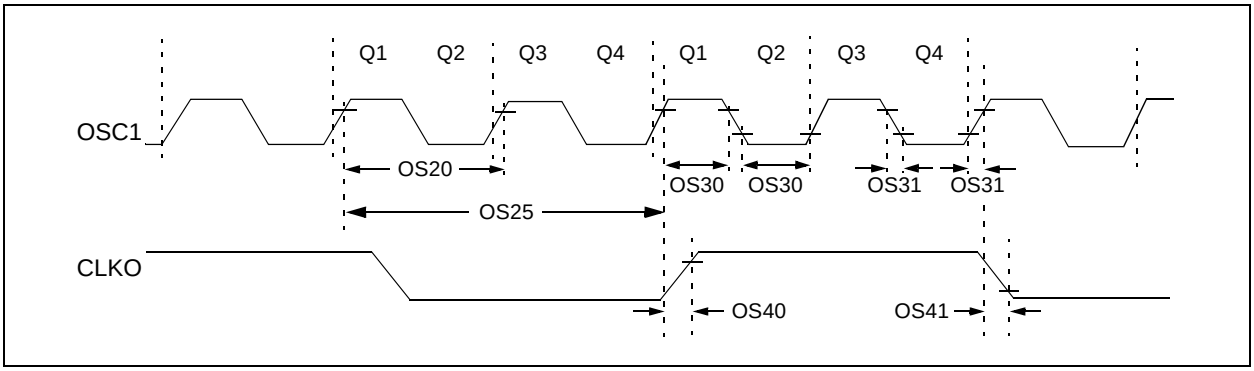

© 2006-2014 Microchip Technology Inc.

TABLE 21-12: EXTERNAL CLOCK TIMING REQUIREMENTS

AC CHARACTERISTICS			Standard Operating Conditions: 3.3V and 5.0V (±10%) (unless otherwise stated) Operating temperature -40°C ≤ TA ≤ +85°C for Industrial -40°C ≤ TA ≤ +125°C for Extended				
Param No.	**Symbol**	**Characteristic**	**Min**	**Typ(1)**	**Max**	**Units**	**Conditions**
OS10	FIN	External CLKI Frequency(2) (External clocks allowed only in EC mode)	6 6	— —	15.00 15.00	MHz MHz	EC EC with 32x PLL
		Oscillator Frequency(2)	6 6	— —	15.00 15.00	MHz MHz	HS FRC internal
OS20	TOSC	TOSC = 1/FOSC(3)	16.5	—	DC	ns	
OS25	TCY	Instruction Cycle Time(2,4)	33	—	DC	ns	
OS30	TosL, TosH	External Clock in (OSC1) High or Low Time(2)	.45 x TOSC	—	—	ns	EC
OS31	TosR, TosF	External Clock in (OSC1) Rise or Fall Time(2)	—	—	20	ns	EC
OS40	TckR	CLKO Rise Time(2,5)	—	6	10	ns	
OS41	TckF	CLKO Fall Time(2,5)	—	6	10	ns	

Note 1: Data in “Typ” column is at 5V, +25°C unless otherwise stated. Parameters are for design guidance only and are not tested.

2: These parameters are characterized but not tested in manufacturing.

3: The oscillator frequency (FOSC) is equal to FIN when the PLL is disabled. FOSC is equal to 4 x FIN when the PLL is enabled.

4: Instruction cycle period (TCY) equals two times the input oscillator time base period. All specified values are based on characterization data for that particular oscillator type under standard operating conditions with the device executing code. Exceeding these specified limits may result in an unstable oscillator operation and/or higher than expected current consumption. All devices are tested to operate at “Min.” values with an external clock applied to the OSC1/CLK1 pin. When an external clock input is used, the “Max.” cycle time limit is “DC” (no clock) for all devices.

5: Measurements are taken in EC mode. The CLKO signal is measured on the OSC2 pin.

TABLE 21-13: PLL CLOCK TIMING SPECIFICATIONS (V_{DD} = 3.0 AND 5.0V)

AC CHARACTERISTICS			Standard Operating Conditions: 3.3V and 5.0V (±10%) (unless otherwise stated) Operating temperature -40°C ≤ TA ≤ +85°C for Industrial -40°C ≤ TA ≤ +125°C for Extended				
Param No.	**Symbol**	**Characteristic(1)**	**Min**	**Typ(2)**	**Max**	**Units**	**Conditions**
OS50	FPLLI	PLL Input Frequency Range(2)	6	—	15	MHz	EC, HS modes with PLL x32
OS51	FSYS	On-Chip PLL Output(2)	192	—	480	MHz	EC, HS modes with PLL x32
OS52	TLOCK	PLL Start-up Time (Lock Time)	—	20	50	μs	
OS53	DCLK	CLKO Stability (Jitter)	—	—	1	%	Measured over 100 ms period

Note 1: These parameters are characterized but not tested in manufacturing.

2: Data in “Typ” column is at 5V, +25°C unless otherwise stated. Parameters are for design guidance only and are not tested.

TABLE 21-14: INTERNAL CLOCK TIMING EXAMPLES

Clock Oscillator Mode	FIN (MHz)(1)	TCY (μsec)(2)	MIPS(3) w/o PLL	MIPS(4) w/PLL x32
EC	10	0.2	5.0	20
	15	0.133	7.5	30
HS	10	0.2	5.0	20
	15	0.133	7.5	30

Note 1: Assumption: Oscillator Postscaler is divide-by-1.

2: Instruction Execution Cycle Time: TCY = 1/MIPS.

3: Instruction Execution Frequency without PLL: MIPS = FIN/2 (since there are 2 Q clocks per instruction cycle).

4: Instruction Execution Frequency with PLL: MIPS = (FIN * 2).

© 2006-2014 Microchip Technology Inc.

TABLE 21-15: AC CHARACTERISTICS: INTERNAL RC ACCURACY

AC CHARACTERISTICS		Standard Operating Conditions: 3.3V and 5.0V (± 10%) (unless otherwise stated) Operating temperature -40°C ≤ TA ≤ +85°C for industrial -40°C ≤ TA ≤ +125°C for Extended					
Param No.	**Characteristic**	**Min**	**Typ**	**Max**	**Units**	**Conditions**	
	Internal FRC Accuracy @ FRC Freq = 6.4 MHz(1)						
	FRC	-0.06	—	+0.06	%	+25°C	VDD = 3.0-3.6V
		-0.06	—	+0.06	%	+25°C	VDD = 4.5-5.5V
		-1	—	+1	%	-40°C ≤ TA ≤ +85°C	VDD = 3.0-3.6V
		-1	—	+1	%	-40°C ≤ TA ≤ +85°C	VDD = 4.5-5.5V
		-1	—	+1	%	-40°C ≤ TA ≤ +125°C	VDD = 4.5-5.5V
	Internal FRC Accuracy @ FRC Freq = 9.7 MHz(1)						
	FRC	-0.06	—	+0.06	%	+25°C	VDD = 3.0-3.6V
		-0.06	—	+0.06	%	+25°C	VDD = 4.5-5.5V
		-1	—	+1	%	-40°C ≤ TA ≤ +85°C	VDD = 3.0-3.6V
		-1	—	+1	%	-40°C ≤ TA ≤ +85°C	VDD = 4.5-5.5V
		-1	—	+1	%	-40°C ≤ TA ≤ +125°C	VDD = 4.5-5.5V
	Internal FRC Accuracy @ FRC Freq = 14.55 MHz(1)						
	FRC	-0.06	—	+0.06	%	+25°C	VDD = 3.0-3.6V
		-0.06	—	+0.06	%	+25°C	VDD = 4.5-5.5V
		-1	—	+1	%	-40°C ≤ TA ≤ +85°C	VDD = 3.0-3.6V
		-1	—	+1	%	-40°C ≤ TA ≤ +85°C	VDD = 4.5-5.5V
		-1	—	+1	%	-40°C ≤ TA ≤ +125°C	VDD = 4.5-5.5V

Note 1: Frequency calibrated at +25°C and 5V. TUN bits can be used to compensate for temperature drift.

TABLE 21-16: AC CHARACTERISTICS: INTERNAL RC JITTER

AC CHARACTERISTICS		Standard Operating Conditions: 3.3V and 5.0V (±10%) (unless otherwise stated) Operating temperature -40°C ≤ TA ≤ +85°C for industrial -40°C ≤ TA ≤ +125°C for Extended					
Param No.	**Characteristic**	**Min**	**Typ**	**Max**	**Units**	**Conditions**	
	Internal FRC Jitter @ FRC Freq = 6.4 MHz(1)						
	FRC	-1	—	+1	%	+25°C	VDD = 3.0-3.6V
		-1	—	+1	%	+25°C	VDD = 4.5-5.5V
		-1	—	+1	%	-40°C ≤ TA ≤ +85°C	VDD = 3.0-3.6V
		-1	—	+1	%	-40°C ≤ TA ≤ +85°C	VDD = 4.5-5.5V
		-1	—	+1	%	-40°C ≤ TA ≤ +125°C	VDD = 4.5-5.5V
	Internal FRC Jitter @ FRC Freq = 9.7 MHz(1)						
	FRC	-1	—	+1	%	+25°C	VDD = 3.0-3.6V
		-1	—	+1	%	+25°C	VDD = 4.5-5.5V
		-1	—	+1	%	-40°C ≤ TA ≤ +85°C	VDD = 3.0-3.6V
		-1	—	+1	%	-40°C ≤ TA ≤ +85°C	VDD = 4.5-5.5V
		-1	—	+1	%	-40°C ≤ TA ≤ +125°C	VDD = 4.5-5.5V
	Internal FRC Jitter @ FRC Freq = 14.55 MHz(1)						
	FRC	-1	—	+1	%	+25°C	VDD = 3.0-3.6V
		-1	—	+1	%	+25°C	VDD = 4.5-5.5V
		-1	—	+1	%	-40°C ≤ TA ≤ +85°C	VDD = 3.0-3.6V
		-1	—	+1	%	-40°C ≤ TA ≤ +85°C	VDD = 4.5-5.5V
		-1	—	+1	%	-40°C ≤ TA ≤ +125°C	VDD = 4.5-5.5V

Note 1: Frequency calibrated at +25°C and 5V. TUN bits can be used to compensate for temperature drift.

© 2006-2014 Microchip Technology Inc.

FIGURE 21-3: CLKO AND I/O TIMING CHARACTERISTICS

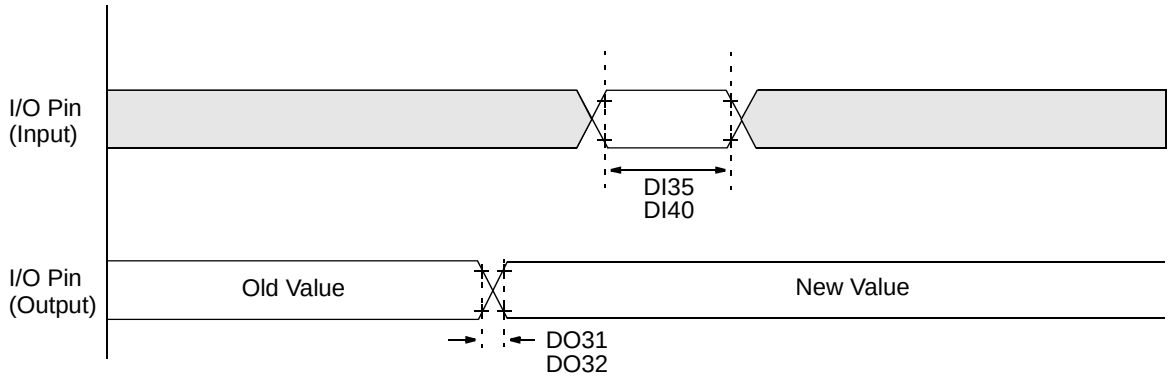

Note: Refer to Figure 21-1 for load conditions.

TABLE 21-17: CLKO AND I/O TIMING REQUIREMENTS

AC CHARACTERISTICS			Standard Operating Conditions: 3.3V and 5.0V (±10%) (unless otherwise stated) Operating temperature -40°C ≤ TA ≤ +85°C for Industrial -40°C ≤ TA ≤ +125°C for Extended				
Param No.	**Symbol**	**Characteristic(1,2)**	**Min**	**Typ(3)**	**Max**	**Units**	**Conditions**
DO31	TIOR	Port Output Rise Time	—	10	25	ns	
DO32	TIOF	Port Output Fall Time	—	10	25	ns	
DI35	TINP	INTx Pin High or Low Time (output)	20	—	—	ns	
DI40	TRBP	CNx High or Low Time (input)	2 TCY	—	—	ns	

Note 1: These parameters are asynchronous events not related to any internal clock edges.
2: These parameters are characterized but not tested in manufacturing.
3: Data in “Typ” column is at 5V, +25°C unless otherwise stated.

FIGURE 21-4: RESET, WATCHDOG TIMER, OSCILLATOR START-UP TIMER AND POWER-UP TIMER TIMING CHARACTERISTICS

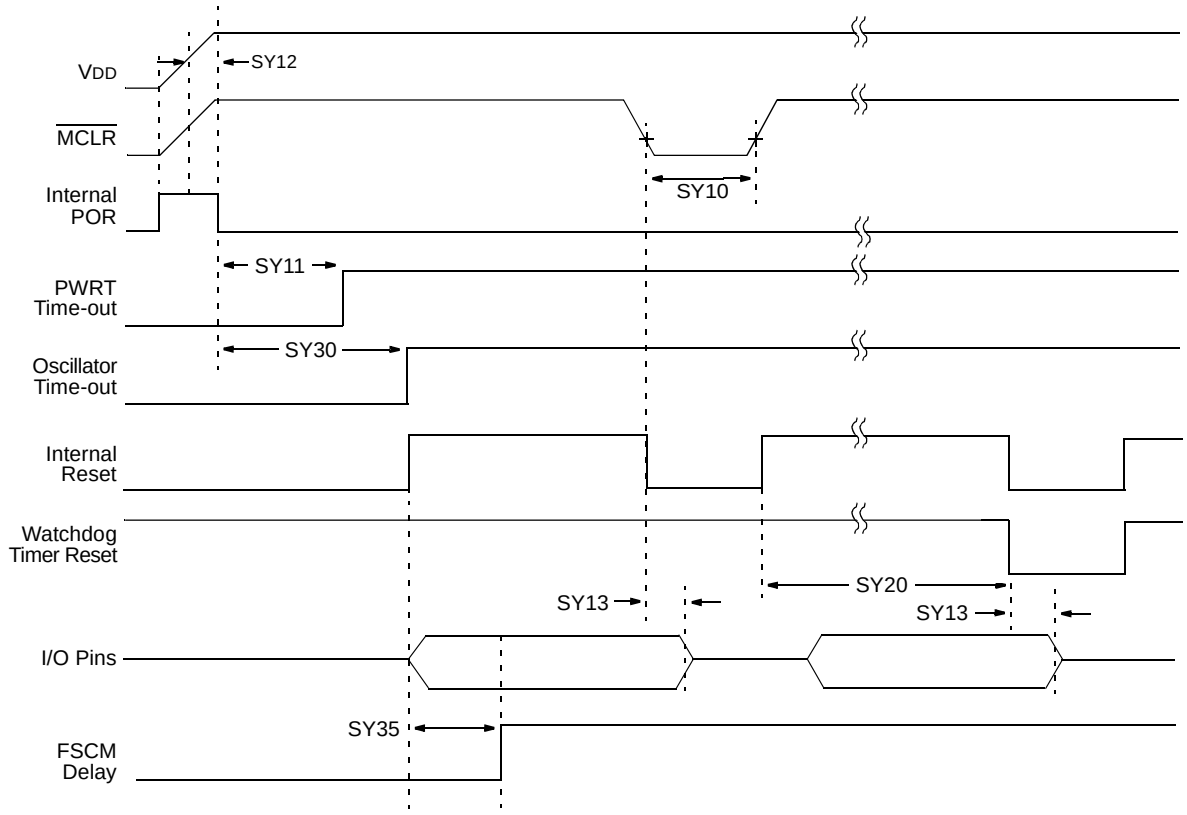

Note: Refer to Figure 21-1 for load conditions.

© 2006-2014 Microchip Technology Inc.

TABLE 21-18: RESET, WATCHDOG TIMER, OSCILLATOR START-UP TIMER, POWER-UP TIMER AND TIMING REQUIREMENTS

AC CHARACTERISTICS			Standard Operating Conditions: 3.3V and 5.0V (±10%) (unless otherwise stated) Operating temperature -40°C ≤ TA ≤ +85°C for Industrial -40°C ≤ TA ≤ +125°C for Extended				
Param No.	**Symbol**	**Characteristic(1)**	**Min**	**Typ(2)**	**Max**	**Units**	**Conditions**
SY10	TMCL	$\overline{\text{MCLR}}$ Pulse Width (low)	2	—	—	μs	-40°C to +125°C
SY11	TPWRT	Power-up Timer Period	0.75 1.5 3 6 12 24 48 96	1 2 4 8 16 32 64 128	1.25 2.5 5 10 20 40 80 160	ms	-40°C to +125°C, user programmable
SY12	TPOR	Power-on Reset Delay	3	10	30	μs	-40°C to +125°C
SY13	TIOZ	I/O High-impedance from $\overline{\text{MCLR}}$ Low or Watchdog Timer Reset	—	0.8	1.0	μs	
SY20	TWDT1 TWDT2	Watchdog Timer Time-out Period (No Prescaler)	1.4 1.4	2.1 2.1	2.8 2.8	ms ms	VDD = 5V, -40°C to +125°C VDD = 3.3V, -40°C to +125°C
SY30	TOST	Oscillation Start-up Timer Period	—	1024 TOSC	—	—	TOSC = OSC1 period
SY35	TFSCM	Fail-Safe Clock Monitor Delay	—	500	—	μs	-40°C to +125°C

Note 1: These parameters are characterized but not tested in manufacturing.

2: Data in “Typ” column is at 5V, +25°C unless otherwise stated.

FIGURE 21-5: BAND GAP START-UP TIME CHARACTERISTICS

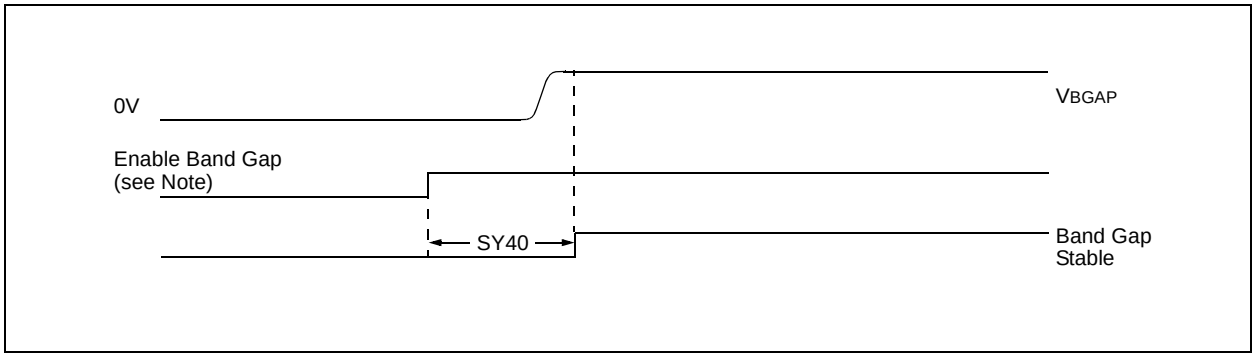

TABLE 21-19: BAND GAP START-UP TIME REQUIREMENTS

AC CHARACTERISTICS			Standard Operating Conditions: 3.3V and 5.0V (±10%) (unless otherwise stated) Operating temperature -40°C ≤ TA ≤ +85°C for Industrial -40°C ≤ TA ≤ +125°C for Extended				
Param No.	**Symbol**	**Characteristic(1)**	**Min**	**Typ(2)**	**Max**	**Units**	**Conditions**
SY40	TBGAP	Band Gap Start-up Time	—	40	65	µs	Defined as the time between the instant that the band gap is enabled and the moment that the band gap reference voltage is stable. RCON<13> status bit.

Note 1: These parameters are characterized but not tested in manufacturing.

2: Data in “Typ” column is at 5V, +25°C unless otherwise stated.

© 2006-2014 Microchip Technology Inc.

FIGURE 21-6: TIMERx EXTERNAL CLOCK TIMING CHARACTERISTICS

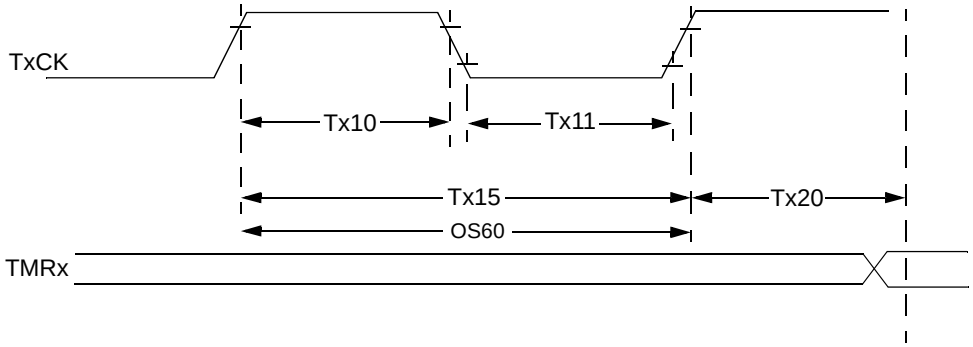

Note: "x" refers to Timer Type A or Timer Type B.
Refer to Figure 21-1 for load conditions.

TABLE 21-20: TIMER1 EXTERNAL CLOCK TIMING REQUIREMENTS

AC CHARACTERISTICS				Standard Operating Conditions: 3.3V and 5.0V (±10%) (unless otherwise stated) Operating temperature -40°C ≤ TA ≤ +85°C for Industrial -40°C ≤ TA ≤ +125°C for Extended				
Param No.	**Symbol**	**Characteristic**		**Min**	**Typ**	**Max**	**Units**	**Conditions**
TA10	TTXH	T1CK High Time	Synchronous, no prescaler	0.5 TCY + 20	—	—	ns	Must also meet Parameter TA15
			Synchronous, with prescaler	10	—	—	ns	
			Asynchronous	10	—	—	ns	
TA11	TTXL	T1CK Low Time	Synchronous, no prescaler	0.5 TCY + 20	—	—	ns	Must also meet Parameter TA15
			Synchronous, with prescaler	10	—	—	ns	
			Asynchronous	10	—	—	ns	
TA15	TTXP	T1CK Input Period	Synchronous, no prescaler	TCY + 10	—	—	ns	
			Synchronous, with prescaler	Greater of: 20 ns or (TCY + 40)/N	—	—	—	N = Prescale value (1, 8, 64, 256)
			Asynchronous	20	—	—	ns	
OS60	Ft1	SOSC1/T1CK Oscillator Input Frequency Range (oscillator enabled by setting bit, TCS (T1CON<1>))		DC	—	50	kHz	
TA20	TCKEXTMRL	Delay from External T1CK Clock Edge to Timer Increment		0.5 TCY	—	1.5 TCY	—	

TABLE 21-21: TIMER2 EXTERNAL CLOCK TIMING REQUIREMENTS

AC CHARACTERISTICS				Standard Operating Conditions: 3.3V and 5.0V (±10%) (unless otherwise stated) Operating temperature -40°C ≤ TA ≤ +85°C for Industrial -40°C ≤ TA ≤ +125°C for Extended				
Param No.	**Symbol**	**Characteristic**		**Min**	**Typ**	**Max**	**Units**	**Conditions**
TB10	TTXH	T2CK High Time	Synchronous, no prescaler	0.5 TCY + 20	—	—	ns	Must also meet Parameter TB15
			Synchronous, with prescaler	10	—	—	ns	
TB11	TTXL	T2CK Low Time	Synchronous, no prescaler	0.5 TCY + 20	—	—	ns	Must also meet Parameter TB15
			Synchronous, with prescaler	10	—	—	ns	
TB15	TTXP	T2CK Input Period	Synchronous, no prescaler	TCY + 10	—	—	ns	N = Prescale value (1, 8, 64, 256)
			Synchronous, with prescaler	Greater of: 20 ns or (TCY + 40)/N	—	—	—	
TB20	TCKEXTMRL	Delay from External T2CK Clock Edge to Timer Increment		0.5 TCY	—	1.5 TCY	—	

TABLE 21-22: TIMER3 EXTERNAL CLOCK TIMING REQUIREMENTS

AC CHARACTERISTICS				Standard Operating Conditions: 3.3V and 5.0V (±10%) (unless otherwise stated) Operating temperature -40°C ≤ TA ≤ +85°C for Industrial -40°C ≤ TA ≤ +125°C for Extended				
Param No.	**Symbol**	**Characteristic**		**Min**	**Typ**	**Max**	**Units**	**Conditions**
TC10	TTXH	T3CK High Time	Synchronous	0.5 TCY + 20	—	—	ns	Must also meet Parameter TC15
TC11	TTXL	T3CK Low Time	Synchronous	0.5 TCY + 20	—	—	ns	Must also meet Parameter TC15
TC15	TTXP	T3CK Input Period	Synchronous, no prescaler	TCY + 10	—	—	ns	N = Prescale value (1, 8, 64, 256)
			Synchronous, with prescaler	Greater of: 20 ns or (TCY + 40)/N	—	—	—	
TC20	TCKEXTMRL	Delay from External T3CK Clock Edge to Timer Increment		0.5 TCY	—	1.5 TCY	—	

© 2006-2014 Microchip Technology Inc.

FIGURE 21-7: INPUT CAPTURE x (ICx) TIMING CHARACTERISTICS

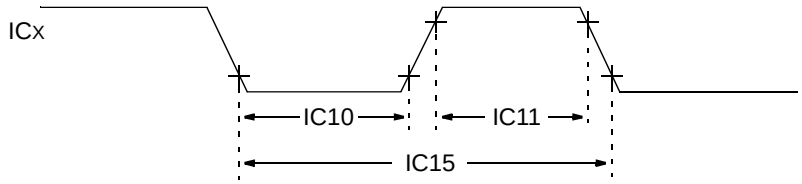

Note: Refer to Figure 21-1 for load conditions.

TABLE 21-23: INPUT CAPTURE x TIMING REQUIREMENTS

AC CHARACTERISTICS				Standard Operating Conditions: 3.3V and 5.0V (±10%) (unless otherwise stated) Operating temperature -40°C ≤ TA ≤ +85°C for Industrial -40°C ≤ TA ≤ +125°C for Extended			
Param No.	**Symbol**	**Characteristic(1)**		**Min**	**Max**	**Units**	**Conditions**
IC10	TccL	ICx Input Low Time	No Prescaler	0.5 TCY + 20	—	ns	
			With Prescaler	10	—	ns	
IC11	TccH	ICx Input High Time	No Prescaler	0.5 TCY + 20	—	ns	
			With Prescaler	10	—	ns	
IC15	TccP	ICx Input Period		(2 TCY + 40)/N	—	ns	N = Prescale value (1, 4, 16)

Note 1: These parameters are characterized but not tested in manufacturing.

FIGURE 21-8: OUTPUT COMPARE x (OCx) MODULE TIMING CHARACTERISTICS

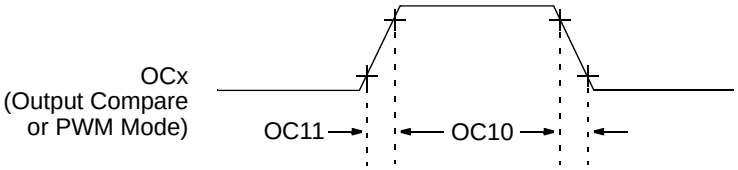

Note: Refer to Figure 21-1 for load conditions.

TABLE 21-24: OUTPUT COMPARE x MODULE TIMING REQUIREMENTS

AC CHARACTERISTICS			Standard Operating Conditions: 3.3V and 5.0V (±10%) (unless otherwise stated) Operating temperature -40°C ≤ TA ≤ +85°C for Industrial -40°C ≤ TA ≤ +125°C for Extended				
Param No.	**Symbol**	**Characteristic(1)**	**Min**	**Typ(2)**	**Max**	**Units**	**Conditions**
OC10	TccF	OCx Output Fall Time	—	—	—	ns	See Parameter D032
OC11	TccR	OCx Output Rise Time	—	—	—	ns	See Parameter D031

Note 1: These parameters are characterized but not tested in manufacturing.

2: Data in “Typ” column is at 5V, +25°C unless otherwise stated. Parameters are for design guidance only and are not tested.

FIGURE 21-9: OCx/PWM MODULE TIMING CHARACTERISTICS

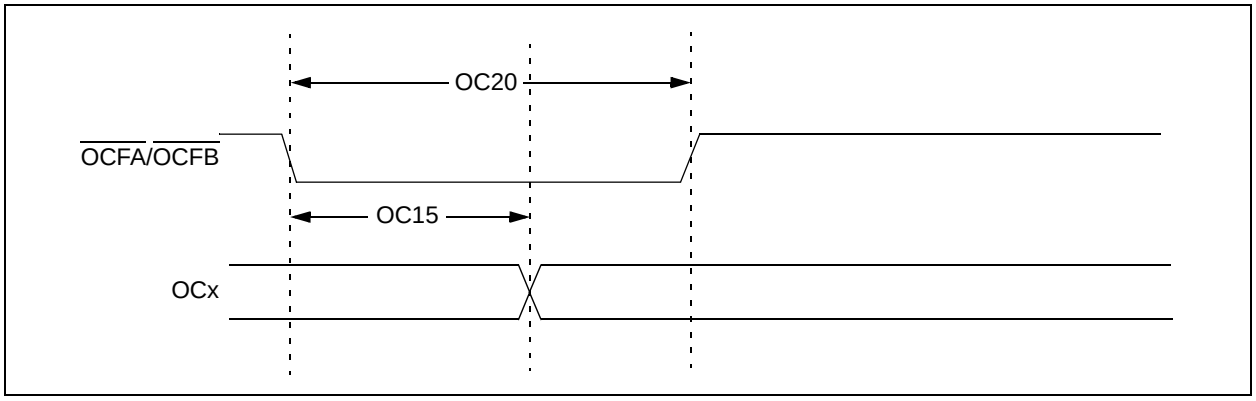

TABLE 21-25: SIMPLE OCx/PWM MODE TIMING REQUIREMENTS

AC CHARACTERISTICS				Standard Operating Conditions: 3.3V and 5.0V (±10%) (unless otherwise stated) Operating temperature -40°C ≤ TA ≤ +85°C for Industrial -40°C ≤ TA ≤ +125°C for Extended				
Param No.	**Symbol**	**Characteristic(1)**	**Min**	**Typ(2)**	**Max**	**Units**	**Conditions**	
OC15	TFD	Fault Input to PWM I/O Change	—	—	25	ns	VDD = 3.3V	-40°C to +85°C
					TBD	ns	VDD = 5V	
OC20	TFLT	Fault Input Pulse Width	—	—	50	ns	VDD = 3.3V	-40°C to +85°C
					TBD	ns	VDD = 5V	

Legend: TBD = To Be Determined

Note 1: These parameters are characterized but not tested in manufacturing.

2: Data in “Typ” column is at 5V, +25°C unless otherwise stated. Parameters are for design guidance only and are not tested.

© 2006-2014 Microchip Technology Inc.

FIGURE 21-10: POWER SUPPLY PWM MODULE FAULT TIMING CHARACTERISTICS

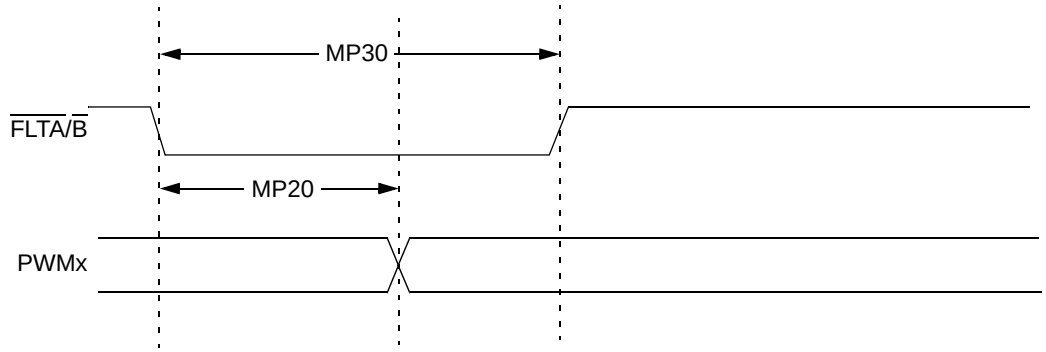

FIGURE 21-11: POWER SUPPLY PWM MODULE TIMING CHARACTERISTICS

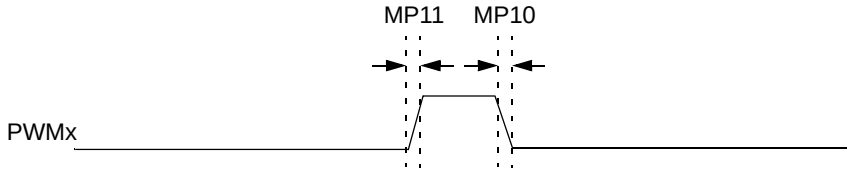

Note: Refer to Figure 21-1 for load conditions.

TABLE 21-26: POWER SUPPLY PWM MODULE TIMING REQUIREMENTS

AC CHARACTERISTICS			Standard Operating Conditions: 3.3V and 5.0V (±10%) (unless otherwise stated) Operating temperature -40°C ≤ TA ≤ +85°C for Industrial -40°C ≤ TA ≤ +125°C for Extended				
Param No.	**Symbol**	**Characteristic(1)**	**Min**	**Typ(2)**	**Max**	**Units**	**Conditions**
MP10	TFPWM	PWM Output Fall Time	—	10	25	ns	VDD = 5V
MP11	TRPWM	PWM Output Rise Time	—	10	25	ns	VDD = 5V
MP12	TFPWM	PWM Output Fall Time	—	TBD	TBD	ns	VDD = 3.3V
MP13	TRPWM	PWM Output Rise Time	—	TBD	TBD	ns	VDD = 3.3V
MP20	TFD	Fault Input ↓ to PWM I/O Change	—	—	TBD	ns	VDD = 3.3V
					25	ns	VDD = 5V
MP30	TFH	Minimum Pulse Width	—	—	TBD	ns	VDD = 3.3V
					50	ns	VDD = 5V

Legend: TBD = To Be Determined

Note 1: These parameters are characterized but not tested in manufacturing.

2: Data in “Typ” column is at 5V, +25°C unless otherwise stated. Parameters are for design guidance only and are not tested.

FIGURE 21-12: SPIx MODULE MASTER MODE (CKE = 0) TIMING CHARACTERISTICS

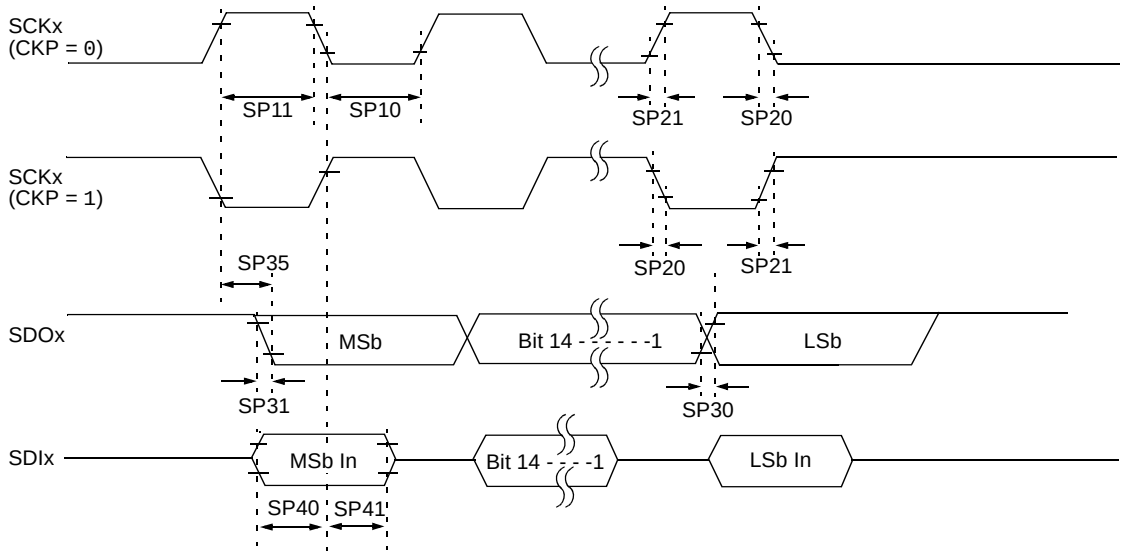

Note: Refer to Figure 21-1 for load conditions.

TABLE 21-27: SPIx MASTER MODE (CKE = 0) TIMING REQUIREMENTS

AC CHARACTERISTICS			Standard Operating Conditions: 3.3V and 5.0V (±10%) (unless otherwise stated) Operating temperature -40°C ≤ TA ≤ +85°C for Industrial -40°C ≤ TA ≤ +125°C for Extended				
Param No.	**Symbol**	**Characteristic(1)**	**Min**	**Typ(2)**	**Max**	**Units**	**Conditions**
SP10	TscL	SCKx Output Low Time(3)	TCY/2	—	—	ns	
SP11	TscH	SCKx Output High Time(3)	TCY/2	—	—	ns	
SP20	TscF	SCKx Output Fall Time(4)	—	—	—	ns	See Parameter D032
SP21	TscR	SCKx Output Rise Time(4)	—	—	—	ns	See Parameter D031
SP30	TdoF	SDOx Data Output Fall Time(4)	—	—	—	ns	See Parameter D032
SP31	TdoR	SDOx Data Output Rise Time(4)	—	—	—	ns	See Parameter D031
SP35	TscH2doV, TscL2doV	SDOx Data Output Valid after SCKx Edge	—	—	30	ns	
SP40	TdiV2scH, TdiV2scL	Setup Time of SDIx Data Input to SCKx Edge	20	—	—	ns	
SP41	TscH2diL, TscL2diL	Hold Time of SDIx Data Input to SCKx Edge	20	—	—	ns	

Note 1: These parameters are characterized but not tested in manufacturing.

2: Data in “Typ” column is at 5V, +25°C unless otherwise stated. Parameters are for design guidance only and are not tested.

3: The minimum clock period for SCKx is 100 ns. Therefore, the clock generated in Master mode must not violate this specification.

4: Assumes 50 pF load on all SPIx pins.

© 2006-2014 Microchip Technology Inc.

FIGURE 21-13: SPIx MODULE MASTER MODE (CKE = 1) TIMING CHARACTERISTICS

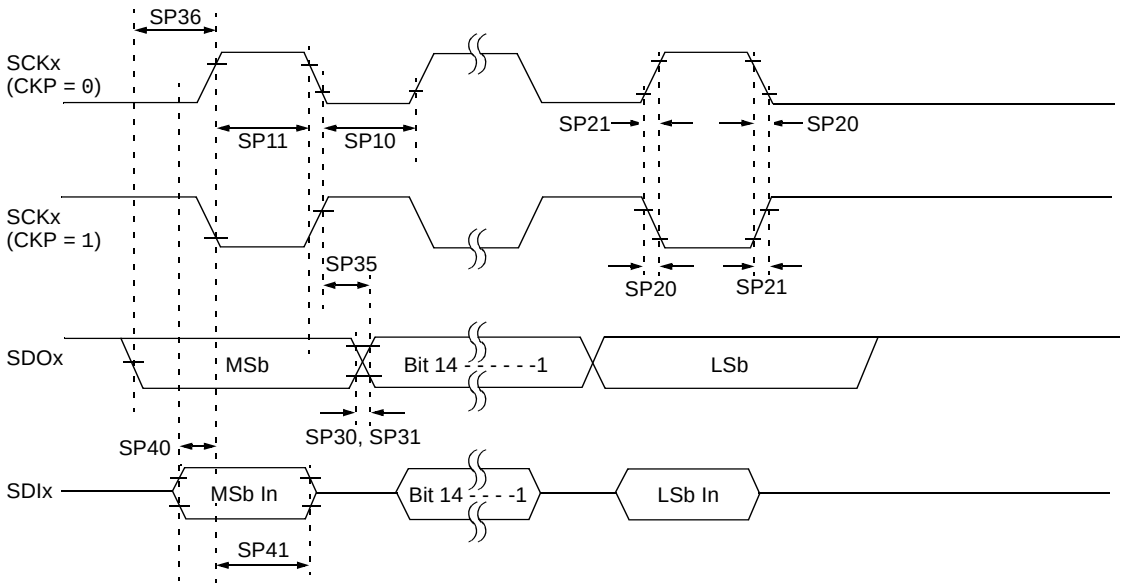

Note: Refer to Figure 21-1 for load conditions.

TABLE 21-28: SPIx MODULE MASTER MODE (CKE = 1) TIMING REQUIREMENTS

AC CHARACTERISTICS			Standard Operating Conditions: 3.3V and 5.0V (±10%) (unless otherwise stated) Operating temperature -40°C ≤ TA ≤ +85°C for Industrial -40°C ≤ TA ≤ +125°C for Extended				
Param No.	**Symbol**	**Characteristic(1)**	**Min**	**Typ(2)**	**Max**	**Units**	**Conditions**
SP10	TscL	SCKx Output Low Time(3)	TCY/2	—	—	ns	
SP11	TscH	SCKx Output High Time(3)	TCY/2	—	—	ns	
SP20	TscF	SCKx Output Fall Time(4)	—	—	—	ns	See Parameter D032
SP21	TscR	SCKx Output Rise Time(4)	—	—	—	ns	See Parameter D031
SP30	TdoF	SDOx Data Output Fall Time(4)	—	—	—	ns	See Parameter D032
SP31	TdoR	SDOx Data Output Rise Time(4)	—	—	—	ns	See Parameter D031
SP35	TscH2doV, TscL2doV	SDOx Data Output Valid after SCKx Edge	—	—	30	ns	
SP36	TdoV2sc, TdoV2scL	SDOx Data Output Setup to First SCKx Edge	30	—	—	ns	
SP40	TdiV2scH, TdiV2scL	Setup Time of SDIx Data Input to SCKx Edge	20	—	—	ns	
SP41	TscH2diL, TscL2diL	Hold Time of SDIx Data Input to SCKx Edge	20	—	—	ns	

Note 1: These parameters are characterized but not tested in manufacturing.

2: Data in “Typ” column is at 5V, +25°C unless otherwise stated. Parameters are for design guidance only and are not tested.

3: The minimum clock period for SCKx is 100 ns. Therefore, the clock generated in Master mode must not violate this specification.

4: Assumes 50 pF load on all SPIx pins.

FIGURE 21-14: SPIx MODULE SLAVE MODE (CKE = 0) TIMING CHARACTERISTICS

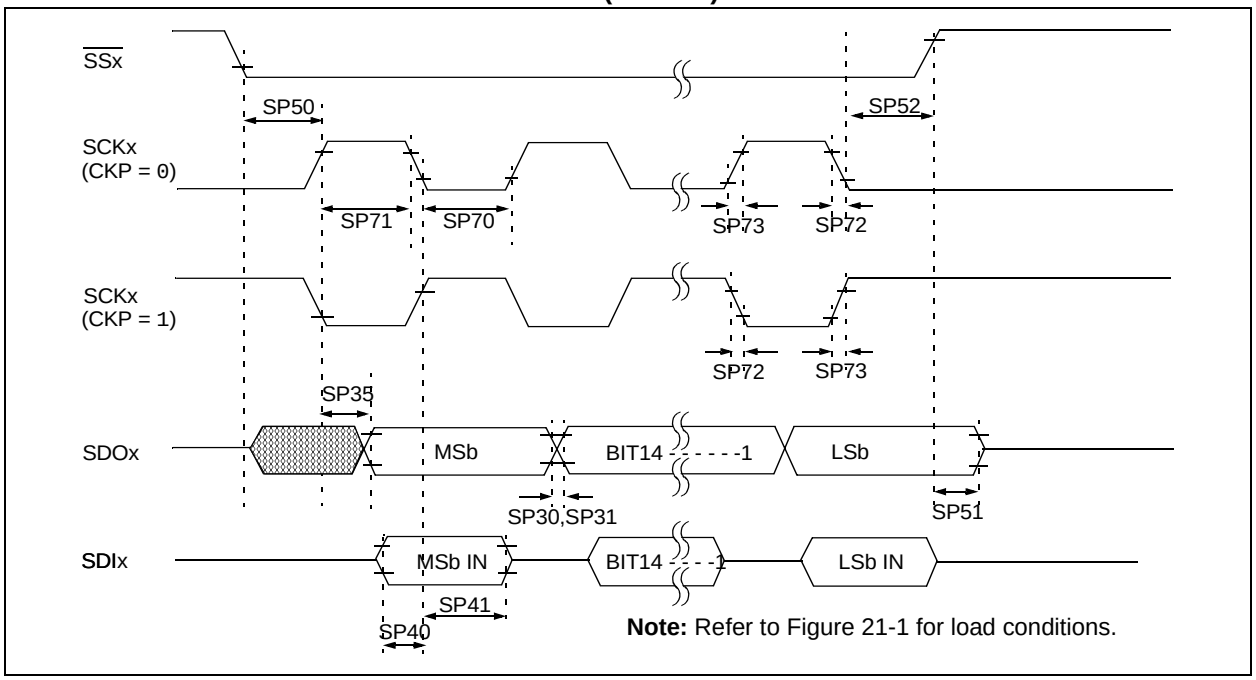

TABLE 21-29: SPIx MODULE SLAVE MODE (CKE = 0) TIMING REQUIREMENTS

AC CHARACTERISTICS			Standard Operating Conditions: 3.3V and 5.0V (±10%) (unless otherwise stated) Operating temperature -40°C ≤ TA ≤ +85°C for Industrial -40°C ≤ TA ≤ +125°C for Extended				
Param No.	**Symbol**	**Characteristic(1)**	**Min**	**Typ(2)**	**Max**	**Units**	**Conditions**
SP70	TscL	SCKx Input Low Time	30	—	—	ns	
SP71	TscH	SCKx Input High Time	30	—	—	ns	
SP72	TscF	SCKx Input Fall Time(3)	—	10	25	ns	
SP73	TscR	SCKx Input Rise Time(3)	—	10	25	ns	
SP30	TdoF	SDOx Data Output Fall Time(3)	—	—	—	ns	See Parameter D032
SP31	TdoR	SDOx Data Output Rise Time(3)	—	—	—	ns	See Parameter D031
SP35	TscH2doV TscL2doV	SDOx Data Output Valid after SCKx Edge	—	—	30	ns	
SP40	TdiV2scH, TdiV2scL	Setup Time of SDIx Data Input to SCKx Edge	20	—	—	ns	
SP41	TscH2diL, TscL2diL	Hold Time of SDIx Data Input to SCKx Edge	20	—	—	ns	
SP50	TssL2scH, TssL2scL	$\overline{SSx}$↓ to SCKx↑ or SCKx Input	120	—	—	ns	
SP51	TssH2doZ	$\overline{SSx}$↑ to SDOx Output High-Impedance(3)	10	—	50	ns	
SP52	TscH2ssH TscL2ssH	$\overline{SSx}$ after SCKx Edge	1.5 TCY + 40	—	—	ns	

Note 1: These parameters are characterized but not tested in manufacturing.

2: Data in “Typ” column is at 5V, +25°C unless otherwise stated. Parameters are for design guidance only and are not tested.

3: Assumes 50 pF load on all SPIx pins.

© 2006-2014 Microchip Technology Inc.

FIGURE 21-15: SPIx MODULE SLAVE MODE (CKE = 1) TIMING CHARACTERISTICS

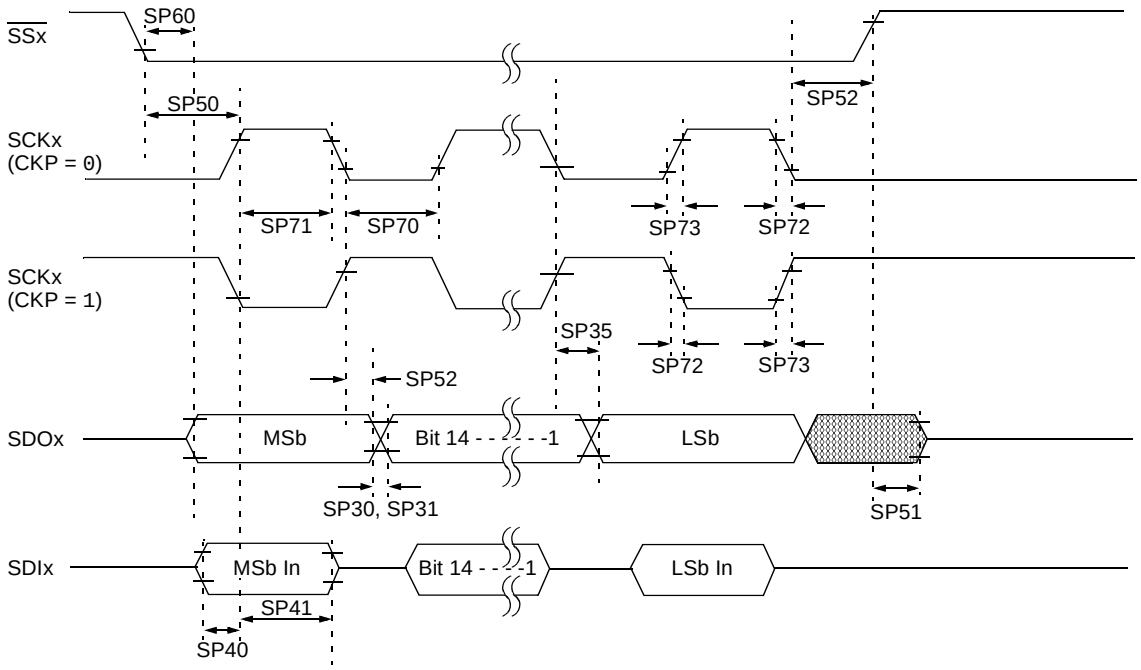

Note: Refer to Figure 21-1 for load conditions.

TABLE 21-30: SPIx MODULE SLAVE MODE (CKE = 1) TIMING REQUIREMENTS

AC CHARACTERISTICS			Standard Operating Conditions: 3.3V and 5.0V (±10%) (unless otherwise stated) Operating temperature -40°C ≤ TA ≤ +85°C for Industrial -40°C ≤ TA ≤ +125°C for Extended				
Param No.	**Symbol**	**Characteristic(1)**	**Min**	**Typ(2)**	**Max**	**Units**	**Conditions**
SP70	TscL	SCKx Input Low Time	30	—	—	ns	
SP71	TscH	SCKx Input High Time	30	—	—	ns	
SP72	TscF	SCKx Input Fall Time(3)	—	10	25	ns	
SP73	TscR	SCKx Input Rise Time(3)	—	10	25	ns	
SP30	TdoF	SDOx Data Output Fall Time(3)	—	—	—	ns	See Parameter D032
SP31	TdoR	SDOx Data Output Rise Time(3)	—	—	—	ns	See Parameter D031
SP35	TscH2doV, TscL2doV	SDOx Data Output Valid after SCKx Edge	—	—	30	ns	
SP40	TdiV2scH, TdiV2scL	Setup Time of SDIx Data Input to SCKx Edge	20	—	—	ns	
SP41	TscH2diL, TscL2diL	Hold Time of SDIx Data Input to SCKx Edge	20	—	—	ns	
SP50	TssL2scH, TssL2scL	$\overline{SSx}$↓ to SCKx↓ or SCKx↑ Input	120	—	—	ns	
SP51	TssH2doZ	$\overline{SSx}$↑ to SDOx Output High-Impedance(4)	10	—	50	ns	
SP52	TscH2ssH TscL2ssH	$\overline{SSx}$↑ after SCKx Edge	1.5 TCY + 40	—	—	ns	
SP60	TssL2doV	SDOx Data Output Valid after $\overline{SSx}$ Edge	—	—	50	ns	

Note 1: These parameters are characterized but not tested in manufacturing.

2: Data in “Typ” column is at 5V, +25°C unless otherwise stated. Parameters are for design guidance only and are not tested.

3: The minimum clock period for SCKx is 100 ns. Therefore, the clock generated in Master mode must not violate this specification.

4: Assumes 50 pF load on all SPIx pins.

© 2006-2014 Microchip Technology Inc.

FIGURE 21-16: I²C™ BUS START/STOP BITS TIMING CHARACTERISTICS (MASTER MODE)

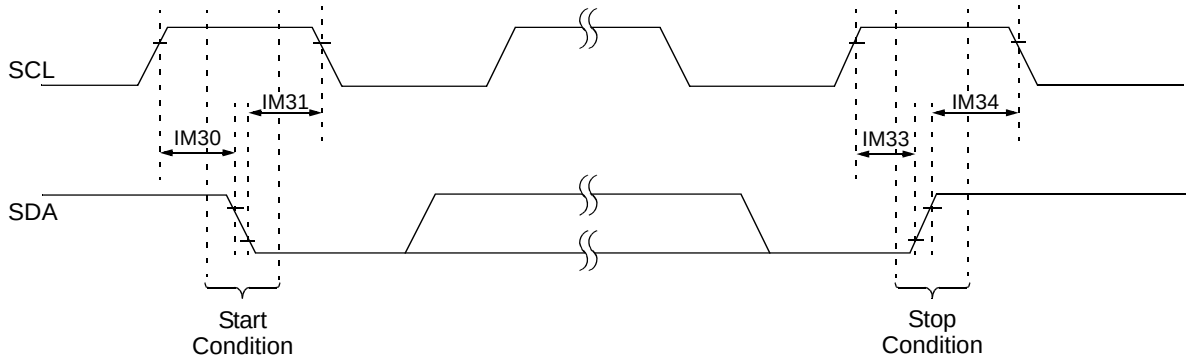

Note: Refer to Figure 21-1 for load conditions.

FIGURE 21-17: I²C™ BUS DATA TIMING CHARACTERISTICS (MASTER MODE)

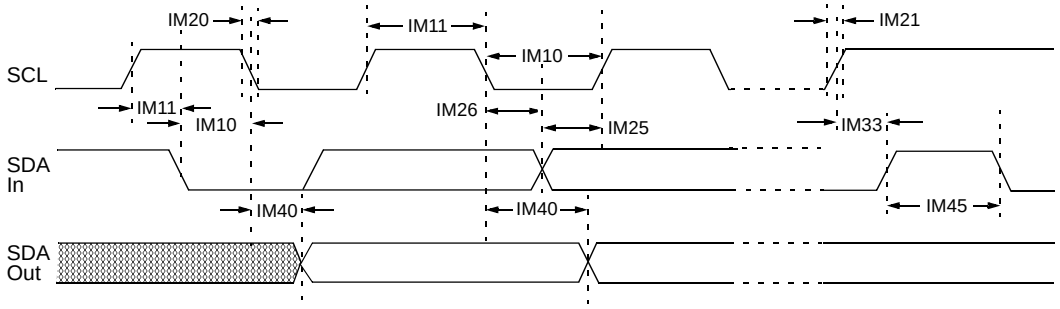

Note: Refer to Figure 21-1 for load conditions.

TABLE 21-31: I²C™ BUS DATA TIMING REQUIREMENTS (MASTER MODE)

AC CHARACTERISTICS				Standard Operating Conditions: 3.3V and 5.0V (±10%) (unless otherwise stated) Operating temperature -40°C ≤ TA ≤ +85°C for Industrial -40°C ≤ TA ≤ +125°C for Extended			
Param No.	**Symbol**	**Characteristic**		**Min(1)**	**Max**	**Units**	**Conditions**
IM10	TLO:SCL	Clock Low Time	100 kHz mode	TCY/2 (BRG + 1)	—	μs	
			400 kHz mode	TCY/2 (BRG + 1)	—	μs	
			1 MHz mode(2)	TCY/2 (BRG + 1)	—	μs	
IM11	THI:SCL	Clock High Time	100 kHz mode	TCY/2 (BRG + 1)	—	μs	
			400 kHz mode	TCY/2 (BRG + 1)	—	μs	
			1 MHz mode(2)	TCY/2 (BRG + 1)	—	μs	
IM20	TF:SCL	SDA and SCL Fall Time	100 kHz mode	—	300	ns	CB is specified to be from 10 to 400 pF
			400 kHz mode	20 + 0.1 CB	300	ns	
			1 MHz mode(2)	—	100	ns	
IM21	TR:SCL	SDA and SCL Rise Time	100 kHz mode	—	1000	ns	CB is specified to be from 10 to 400 pF
			400 kHz mode	20 + 0.1 CB	300	ns	
			1 MHz mode(2)	—	300	ns	
IM25	TSU:DAT	Data Input Setup Time	100 kHz mode	250	—	ns	
			400 kHz mode	100	—	ns	
			1 MHz mode(2)	TBD	—	ns	
IM26	THD:DAT	Data Input Hold Time	100 kHz mode	0	—	ns	
			400 kHz mode	0	0.9	μs	
			1 MHz mode(2)	TBD	—	ns	
IM30	TSU:STA	Start Condition Setup Time	100 kHz mode	TCY/2 (BRG + 1)	—	μs	Only relevant for Repeated Start condition
			400 kHz mode	TCY/2 (BRG + 1)	—	μs	
			1 MHz mode(2)	TCY/2 (BRG + 1)	—	μs	
IM31	THD:STA	Start Condition Hold Time	100 kHz mode	TCY/2 (BRG + 1)	—	μs	After this period, the first clock pulse is generated
			400 kHz mode	TCY/2 (BRG + 1)	—	μs	
			1 MHz mode(2)	TCY/2 (BRG + 1)	—	μs	
IM33	TSU:STO	Stop Condition Setup Time	100 kHz mode	TCY/2 (BRG + 1)	—	μs	
			400 kHz mode	TCY/2 (BRG + 1)	—	μs	
			1 MHz mode(2)	TCY/2 (BRG + 1)	—	μs	
IM34	THD:STO	Stop Condition Hold Time	100 kHz mode	TCY/2 (BRG + 1)	—	ns	
			400 kHz mode	TCY/2 (BRG + 1)	—	ns	
			1 MHz mode(2)	TCY/2 (BRG + 1)	—	ns	
IM40	TAA:SCL	Output Valid from Clock	100 kHz mode	—	3500	ns	
			400 kHz mode	—	1000	ns	
			1 MHz mode(2)	—	—	ns	
IM45	TBF:SDA	Bus Free Time	100 kHz mode	4.7	—	μs	Time the bus must be free before a new transmission can start
			400 kHz mode	1.3	—	μs	
			1 MHz mode(2)	TBD	—	μs	
IM50	CB	Bus Capacitive Loading		—	400	pF	

Legend: TBD = To Be Determined

Note 1: BRG is the value of the I²C™ Baud Rate Generator. Refer to the **"Inter-Integrated Circuit™ (I²C)"** section in the *"dsPIC30F Family Reference Manual"* (DS70046).

2: Maximum pin capacitance = 10 pF for all I²C pins (for 1 MHz mode only).

© 2006-2014 Microchip Technology Inc.

FIGURE 21-18: I²C™ BUS START/STOP BITS TIMING CHARACTERISTICS (SLAVE MODE)

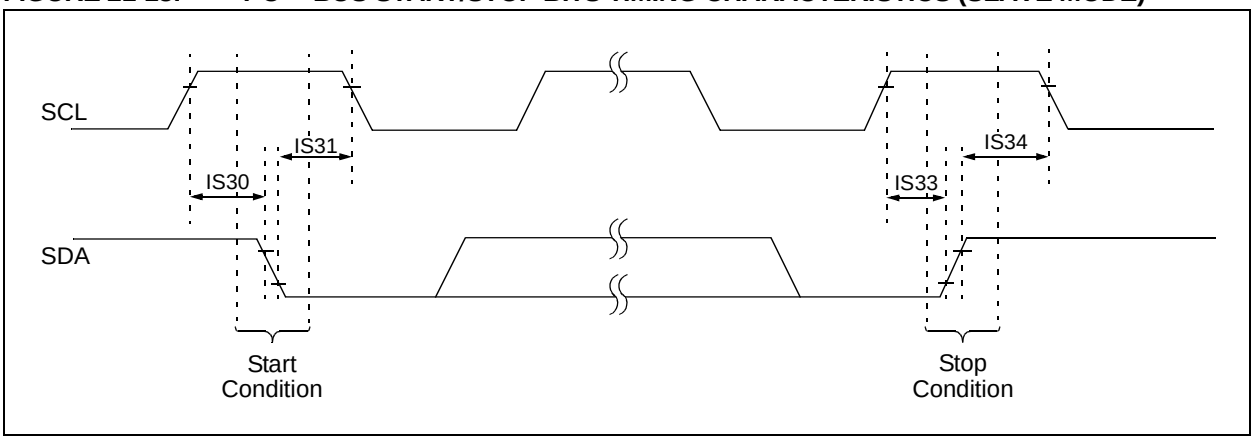

FIGURE 21-19: I²C™ BUS DATA TIMING CHARACTERISTICS (SLAVE MODE)

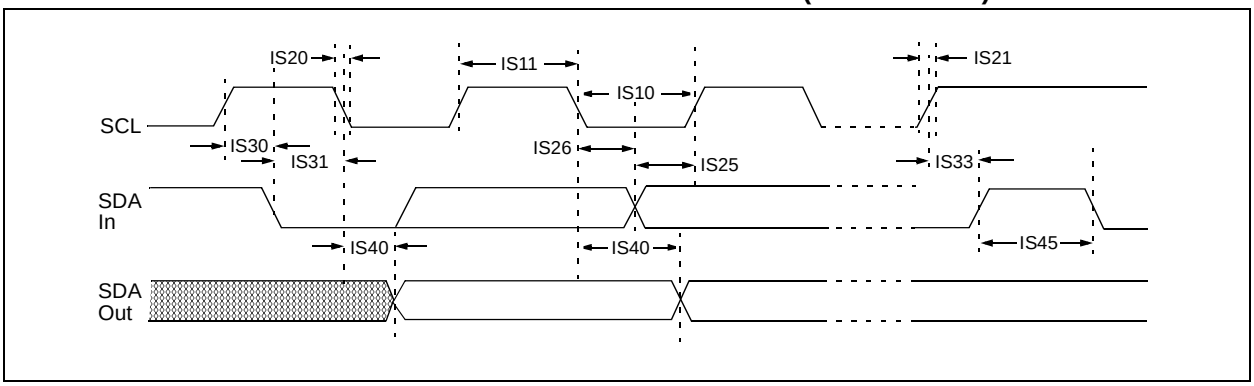

TABLE 21-32: I²C™ BUS DATA TIMING REQUIREMENTS (SLAVE MODE)

AC CHARACTERISTICS			Standard Operating Conditions: 3.3V and 5.0V (±10%) (unless otherwise stated) Operating temperature -40°C ≤ TA ≤ +85°C for Industrial -40°C ≤ TA ≤ +125°C for Extended				
Param No.	**Symbol**	**Characteristic**		**Min**	**Max**	**Units**	**Conditions**
IS10	TLO:SCL	Clock Low Time	100 kHz mode	4.7	—	μs	Device must operate at a minimum of 1.5 MHz
			400 kHz mode	1.3	—	μs	Device must operate at a minimum of 10 MHz
			1 MHz mode(1)	0.5	—	μs	
IS11	THI:SCL	Clock High Time	100 kHz mode	4.0	—	μs	Device must operate at a minimum of 1.5 MHz
			400 kHz mode	0.6	—	μs	Device must operate at a minimum of 10 MHz
			1 MHz mode(1)	0.5	—	μs	
IS20	TF:SCL	SDA and SCL Fall Time	100 kHz mode	—	300	ns	CB is specified to be from 10 to 400 pF
			400 kHz mode	20 + 0.1 CB	300	ns	
			1 MHz mode(1)	—	100	ns	
IS21	TR:SCL	SDA and SCL Rise Time	100 kHz mode	—	1000	ns	CB is specified to be from 10 to 400 pF
			400 kHz mode	20 + 0.1 CB	300	ns	
			1 MHz mode(1)	—	300	ns	
IS25	TSU:DAT	Data Input Setup Time	100 kHz mode	250	—	ns	
			400 kHz mode	100	—	ns	
			1 MHz mode(1)	100	—	ns	
IS26	THD:DAT	Data Input Hold Time	100 kHz mode	0	—	ns	
			400 kHz mode	0	0.9	μs	
			1 MHz mode(1)	0	0.3	μs	
IS30	TSU:STA	Start Condition Setup Time	100 kHz mode	4.7	—	μs	Only relevant for Repeated Start condition
			400 kHz mode	0.6	—	μs	
			1 MHz mode(1)	0.25	—	μs	
IS31	THD:STA	Start Condition Hold Time	100 kHz mode	4.0	—	μs	After this period, the first clock pulse is generated
			400 kHz mode	0.6	—	μs	
			1 MHz mode(1)	0.25	—	μs	
IS33	TSU:STO	Stop Condition Setup Time	100 kHz mode	4.7	—	μs	
			400 kHz mode	0.6	—	μs	
			1 MHz mode(1)	0.6	—	μs	
IS34	THD:STO	Stop Condition Hold Time	100 kHz mode	4000	—	ns	
			400 kHz mode	600	—	ns	
			1 MHz mode(1)	250		ns	
IS40	TAA:SCL	Output Valid from Clock	100 kHz mode	0	3500	ns	
			400 kHz mode	0	1000	ns	
			1 MHz mode(1)	0	350	ns	
IS45	TBF:SDA	Bus Free Time	100 kHz mode	4.7	—	μs	Time the bus must be free before a new transmission can start
			400 kHz mode	1.3	—	μs	
			1 MHz mode(1)	0.5	—	μs	
IS50	CB	Bus Capacitive Loading		—	400	pF	

Note 1: Maximum pin capacitance = 10 pF for all I²C™ pins (for 1 MHz mode only).

© 2006-2014 Microchip Technology Inc.

TABLE 21-33: 10-BIT HIGH-SPEED A/D MODULE SPECIFICATIONS

AC CHARACTERISTICS			Standard Operating Conditions: 3.3V and 5.0V (±10%) (unless otherwise stated) Operating temperature -40°C ≤ TA ≤ +85°C for Industrial -40°C ≤ TA ≤ +125°C for Extended				
Param No.	**Symbol**	**Characteristic**	**Min.**	**Typ**	**Max.**	**Units**	**Conditions**
Device Supply							
AD01	AVDD	Module VDD Supply	Greater of: VDD – 0.3 or 2.7		Lesser of: VDD + 0.3 or 5.5	V	
AD02	AVSS	Module VSS Supply	VSS – 0.3		VSS + 0.3	V	
Analog Input							
AD10	VINH-VINL	Full-Scale Input Span	VSS		VDD	V	
AD11	VIN	Absolute Input Voltage	AVSS – 0.3		AVDD + 0.3	V	
AD12	—	Leakage Current	—	±0.001	±0.244	μA	VINL = AVSS = 0V, AVDD = 5V, Source Impedance = 1 kΩ
AD13	—	Leakage Current	—	±0.001	±0.244	μA	VINL = AVSS = 0V, AVDD = 3.3V, Source Impedance = 1 kΩ
AD17	RIN	Recommended Impedance of Analog Voltage Source	—		1K	Ω	
DC Accuracy							
AD20	Nr	Resolution	10 data bits			bits	
AD21	INL	Integral Nonlinearity	—	±0.5	< ±1	LSb	VINL = AVSS = 0V, AVDD = 5V
AD21A	INL	Integral Nonlinearity	—	±0.5	< ±1	LSb	VINL = AVSS = 0V, AVDD = 3.3V
AD22	DNL	Differential Nonlinearity	—	±0.5	< ±1	LSb	VINL = AVSS = 0V, AVDD = 5V
AD22A	DNL	Differential Nonlinearity	—	±0.5	< ±1	LSb	VINL = AVSS = 0V, AVDD = 3.3V
AD23	GERR	Gain Error	—	±0.75	<±4.0	LSb	VINL = AVSS = 0V, AVDD = 5V
AD23A	GERR	Gain Error	—	±0.75	<±3.0	LSb	VINL = AVSS = 0V, AVDD = 3.3V

Note 1: Because the sample caps will eventually lose charge, clock rates below 10 kHz can affect linearity performance, especially at elevated temperatures.

2: The A/D conversion result never decreases with an increase in the input voltage, and has no missing codes.

TABLE 21-33: 10-BIT HIGH-SPEED A/D MODULE SPECIFICATIONS (CONTINUED)

AC CHARACTERISTICS			Standard Operating Conditions: 3.3V and 5.0V (±10%) (unless otherwise stated) Operating temperature -40°C ≤ TA ≤ +85°C for Industrial -40°C ≤ TA ≤ +125°C for Extended				
Param No.	**Symbol**	**Characteristic**	**Min.**	**Typ**	**Max.**	**Units**	**Conditions**
AD24	EOFF	Offset Error	—	±0.75	<±2.0	LSb	VINL = AVSS = VSS = 0V, AVDD = VDD = 5V
AD24A	EOFF	Offset Error	—	±0.75	<±2.0	LSb	VINL = AVSS = VSS = 0V, AVDD = VDD = 3.3V
AD25	—	Monotonicity(2)	—	—	—	—	Guaranteed
Dynamic Performance							
AD30	THD	Total Harmonic Distortion	-77	-73	-68	dB	
AD31	SINAD	Signal to Noise and Distortion	—	58	—	dB	
AD32	SFDR	Spurious Free Dynamic Range	—	-73	—	dB	
AD33	FNYQ	Input Signal Bandwidth	—	—	0.5	MHz	
AD34	ENOB	Effective Number of Bits	—	9.4	—	bits	

Note 1: Because the sample caps will eventually lose charge, clock rates below 10 kHz can affect linearity performance, especially at elevated temperatures.

2: The A/D conversion result never decreases with an increase in the input voltage, and has no missing codes.

FIGURE 21-20: A/D CONVERSION TIMING PER INPUT

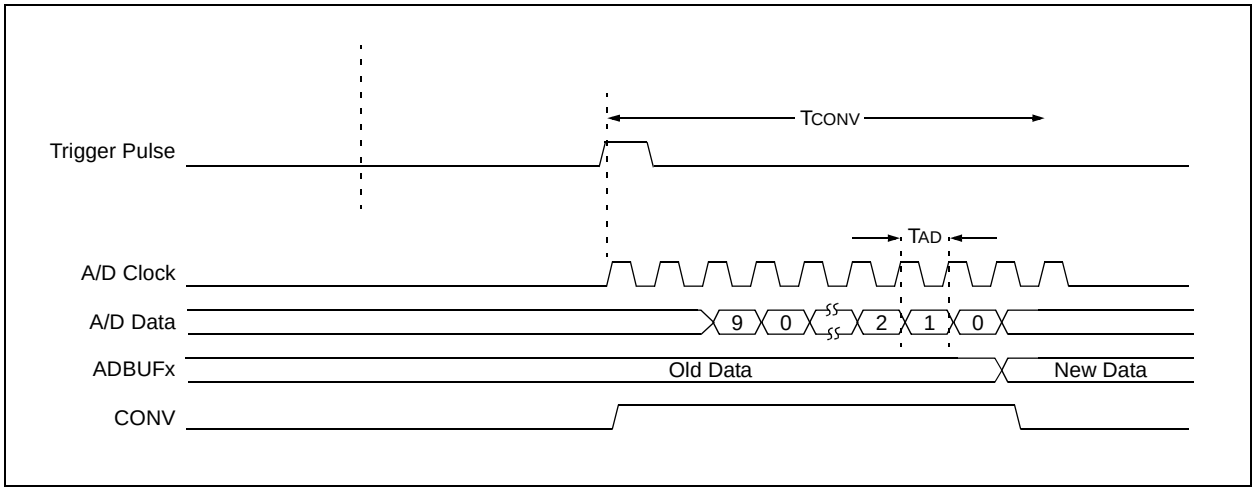

© 2006-2014 Microchip Technology Inc.

TABLE 21-34: COMPARATOR OPERATING CONDITIONS

Symbol	Characteristic	Min	Typ	Max	Units	Comments
VDD	Voltage Range	3.0	—	3.6	V	Operating range of 3.0 V-3.6V
VDD	Voltage Range	4.5	—	5.5	V	Operating range of 4.5 V-5.5 V
TEMP	Temperature Range	-40	—	105	°C	Note that junction temperature can exceed +125°C under these ambient conditions

TABLE 21-35: COMPARATOR AC AND DC SPECIFICATIONS

		Standard Operating Conditions (unless otherwise stated) Operating temperature: -40°C ≤ TA ≤ +105°C				
Symbol	**Characteristic**	**Min**	**Typ**	**Max**	**Units**	**Comments**
VIOFF	Input offset voltage	—	±5	±15	mV	
VICM	Input Common-Mode Voltage Range	0	—	VDD – 1.5	V	
VGAIN	Open Loop Gain	90	—	—	db	
CMRR	Common-Mode Rejection Ratio	70	—	—	db	
TRESP	Large Signal Response	—	20	30	ns	V+ input step of 100 mv, while V- input held at AVDD/2. Delay measured from analog input pin to PWM output pin.

TABLE 21-36: DAC DC SPECIFICATIONS

		Standard Operating Conditions (unless otherwise stated) Operating temperature: -40°C ≤ TA ≤ +105°C				
Symbol	**Characteristic**	**Min**	**Typ**	**Max**	**Units**	**Comments**
CVRSRC	Input Reference Voltage	0	—	AVDD – 1.6	V	
CVRES	Resolution	—	10	—	Bits	
	Transfer Function Accuracy					AVDD = 5 V, DACREF = (AVDD/2)V
INL	Integral Nonlinearity Error	—	—	±1	LSB	
DNL	Differential Nonlinearity Error	—	—	±0.8	LSB	
	Offset Error	—	—	±2	LSB	
	Gain Error	—	—	±2.0	LSB	

TABLE 21-37: DAC AC SPECIFICATIONS

		Standard Operating Conditions (unless otherwise stated) Operating temperature: -40°C ≤ TA ≤ +125°C				
Symbol	**Characteristic**	**Min**	**Typ**	**Max**	**Units**	**Comments**
TSET	Settling Time	—	—	2.0	µs	Measured when range = 1 (High Range) and CMREF<9:0> transitions from 0x1FF to 0x300

NOTES:

© 2006-2014 Microchip Technology Inc.

22.0 PACKAGE MARKING INFORMATION

28-Lead QFN-S

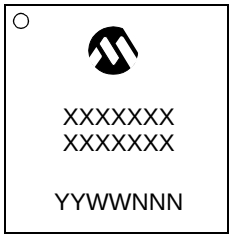

Example

28-Lead PDIP (Skinny DIP)

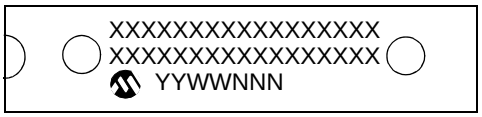

Example

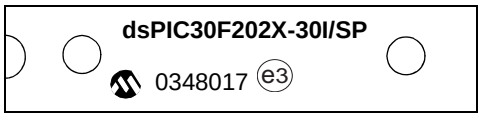

28-Lead SOIC

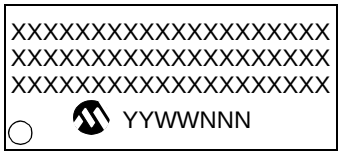

Example

44-Lead TQFP

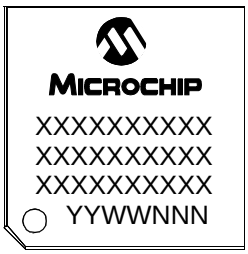

Example

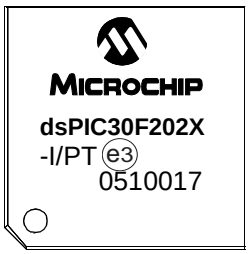

44-Lead QFN

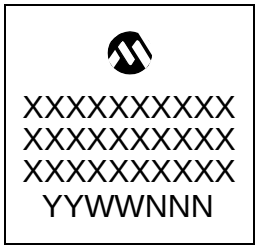

Example

Legend:	XX...X	Customer-specific information
	e3	Year code (last digit of calendar year)
	YY	Year code (last 2 digits of calendar year)
	WW	Week code (week of January 1 is week ‘01’)
	NNN	Alphanumeric traceability code
		Pb-free JEDEC designator for Matte Tin (Sn)
	*	This package is Pb-free. The Pb-free JEDEC designator (e3) can be found on the outer packaging for this package.

28-Lead Plastic Quad Flat, No Lead Package (MM) - 6x6x0.9 mm Body (QFN-S) With 0.40 mm Contact Length

Note: For the most current package drawings, please see the Microchip Packaging Specification located at http://www.microchip.com/packaging

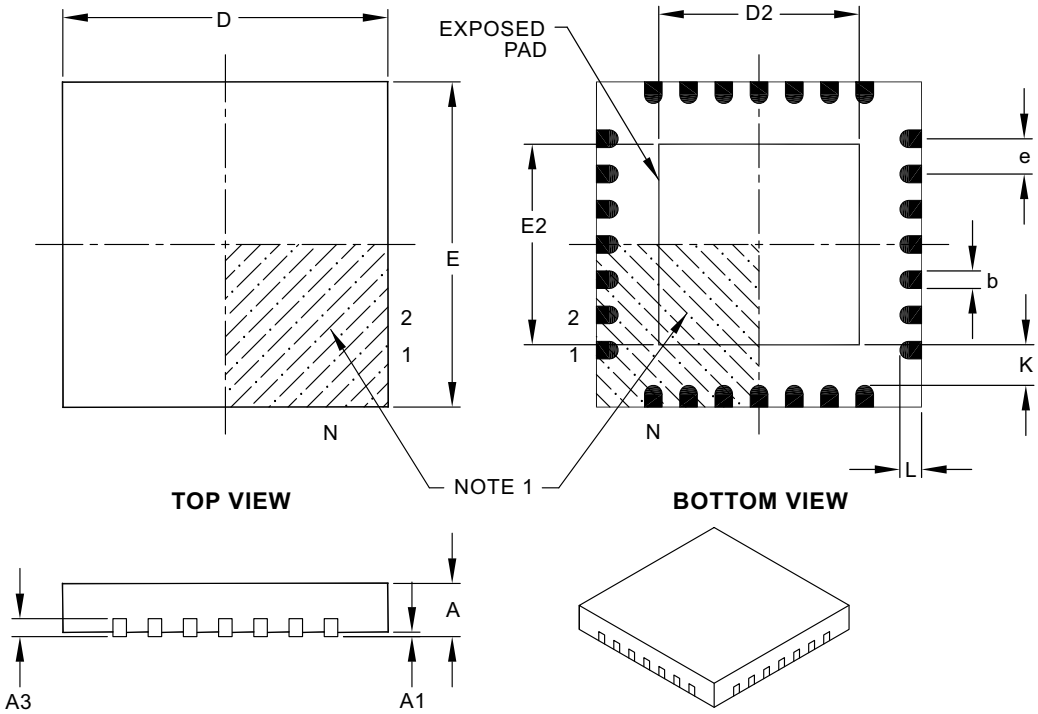

Units		MILLIMETERS		
Dimension Limits		MIN	NOM	MAX
Number of Pins	N		28	
Pitch	e		0.65 BSC	
Overall Height	A	0.80	0.90	1.00
Standoff	A1	0.00	0.02	0.05
Contact Thickness	A3		0.20 REF	
Overall Width	E		6.00 BSC	
Exposed Pad Width	E2	3.65	3.70	4.70
Overall Length	D		6.00 BSC	
Exposed Pad Length	D2	3.65	3.70	4.70
Contact Width	b	0.23	0.38	0.43
Contact Length §	L	0.30	0.40	0.50
Contact-to-Exposed Pad §	K	0.20	—	—

Notes:
1. Pin 1 visual index feature may vary, but must be located within the hatched area.
2. § Significant Characteristic
3. Package is saw singulated
4. Dimensioning and tolerancing per ASME Y14.5M
   BSC: Basic Dimension. Theoretically exact value shown without tolerances.
   REF: Reference Dimension, usually without tolerance, for information purposes only.

□ □ □ □ □ Microchip Technology Drawing No. C04–124, Sept. 8, 2006

© 2006-2014 Microchip Technology Inc.

28-Lead Skinny Plastic Dual In-line (SP) – 300 mil Body (PDIP)

Note: For the most current package drawings, please see the Microchip Packaging Specification located at http://www.microchip.com/packaging

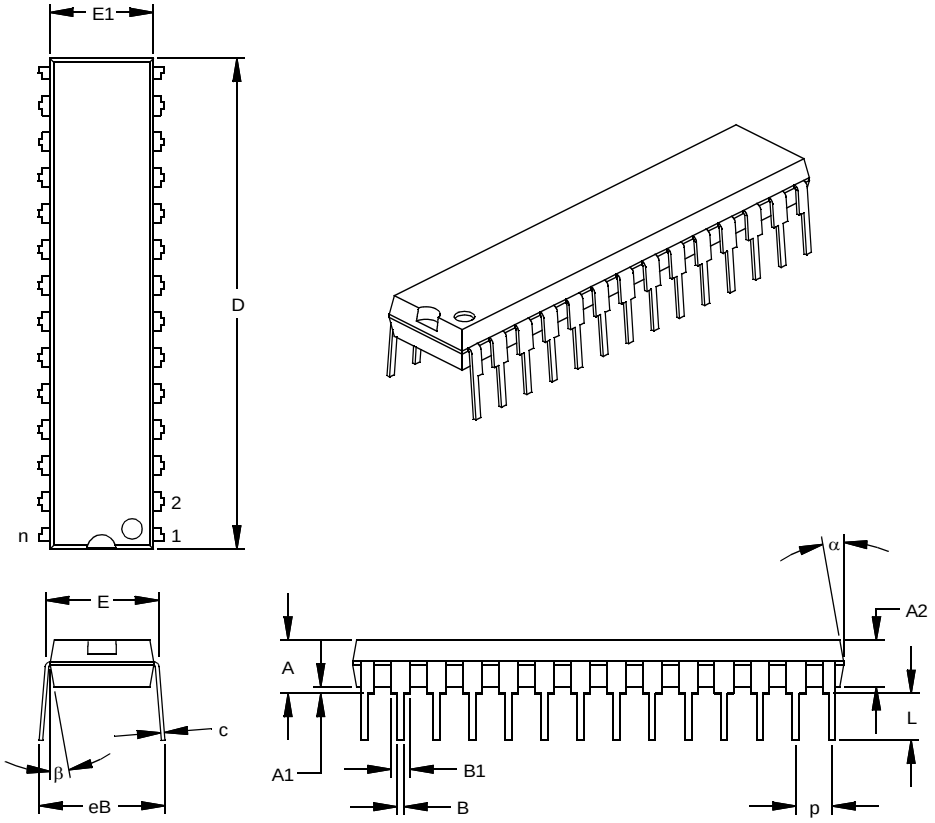

Units		INCHES*			MILLIMETERS		
Dimension Limits		MIN	NOM	MAX	MIN	NOM	MAX
Number of Pins	n	28			28		
Pitch	p		.100			2.54	
Top to Seating Plane	A	.140	.150	.160	3.56	3.81	4.06
Molded Package Thickness	A2	.125	.130	.135	3.18	3.30	3.43
Base to Seating Plane	A1	.015			0.38		
Shoulder to Shoulder Width	E	.300	.310	.325	7.62	7.87	8.26
Molded Package Width	E1	.275	.285	.295	6.99	7.24	7.49
Overall Length	D	1.345	1.365	1.385	34.16	34.67	35.18
Tip to Seating Plane	L	.125	.130	.135	3.18	3.30	3.43
Lead Thickness	c	.008	.012	.015	0.20	0.29	0.38
Upper Lead Width	B1	.040	.053	.065	1.02	1.33	1.65
Lower Lead Width	B	.016	.019	.022	0.41	0.48	0.56
Overall Row Spacing §	eB	.320	.350	.430	8.13	8.89	10.92
Mold Draft Angle Top	α	5	10	15	5	10	15
Mold Draft Angle Bottom	β	5	10	15	5	10	15

***** Controlling Parameter
§ Significant Characteristic
Notes:
Dimension D and E1 do not include mold flash or protrusions. Mold flash or protrusions shall not exceed .010” (0.254mm) per side.
JEDEC Equivalent: MO-095
Drawing No. C04-070

28-Lead Plastic Small Outline (SO) – Wide, 300 mil Body (SOIC)

Note: For the most current package drawings, please see the Microchip Packaging Specification located at http://www.microchip.com/packaging

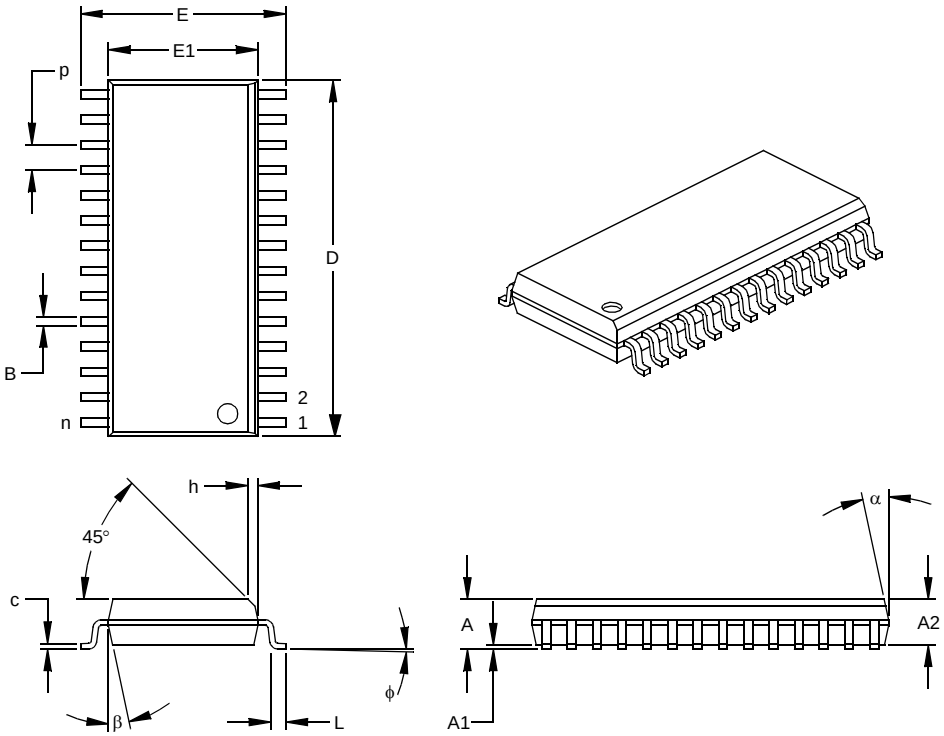

Units		INCHES*			MILLIMETERS		
Dimension Limits		MIN	NOM	MAX	MIN	NOM	MAX
Number of Pins	n		28			28	
Pitch	p		.050			1.27	
Overall Height	A	.093	.099	.104	2.36	2.50	2.64
Molded Package Thickness	A2	.088	.091	.094	2.24	2.31	2.39
Standoff §	A1	.004	.008	.012	0.10	0.20	0.30
Overall Width	E	.394	.407	.420	10.01	10.34	10.67
Molded Package Width	E1	.288	.295	.299	7.32	7.49	7.59
Overall Length	D	.695	.704	.712	17.65	17.87	18.08
Chamfer Distance	h	.010	.020	.029	0.25	0.50	0.74
Foot Length	L	.016	.033	.050	0.41	0.84	1.27
Foot Angle Top	ϕ	0	4	8	0	4	8
Lead Thickness	c	.009	.011	.013	0.23	0.28	0.33
Lead Width	B	.014	.017	.020	0.36	0.42	0.51
Mold Draft Angle Top	α	0	12	15	0	12	15
Mold Draft Angle Bottom	β	0	12	15	0	12	15

***** Controlling Parameter
§ Significant Characteristic
Notes:
Dimensions D and E1 do not include mold flash or protrusions. Mold flash or protrusions shall not exceed .010” (0.254mm) per side.
JEDEC Equivalent: MS-013
Drawing No. C04-052

© 2006-2014 Microchip Technology Inc.

44-Lead Plastic Thin Quad Flatpack (PT) 10x10x1 mm Body, 1.0/0.10 mm Lead Form (TQFP)

Note: For the most current package drawings, please see the Microchip Packaging Specification located at http://www.microchip.com/packaging

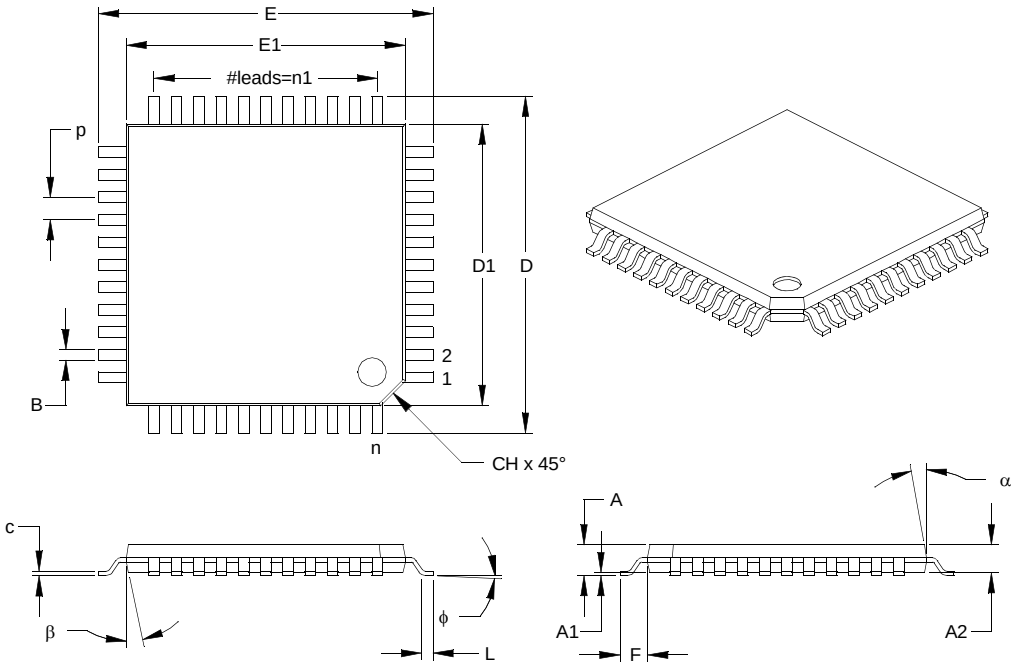

Units		INCHES			MILLIMETERS*		
Dimension Limits		MIN	NOM	MAX	MIN	NOM	MAX
Number of Pins	n	44				44	
Pitch	p	.031				0.80	
Pins per Side	n1	11				11	
Overall Height	A	.039	.043	.047	1.00	1.10	1.20
Molded Package Thickness	A2	.037	.039	.041	0.95	1.00	1.05
Standoff	A1	.002	.004	.006	0.05	0.10	0.15
Foot Length	L	.018	.024	.030	0.45	0.60	0.75
Footprint (Reference)	F	.039 REF.			1.00 REF.		
Foot Angle	ϕ	0	3.5	7	0	3.5	7
Overall Width	E	.463	.472	.482	11.75	12.00	12.25
Overall Length	D	.463	.472	.482	11.75	12.00	12.25
Molded Package Width	E1	.390	.394	.398	9.90	10.00	10.10
Molded Package Length	D1	.390	.394	.398	9.90	10.00	10.10
Lead Thickness	c	.004	.006	.008	0.09	0.15	0.20
Lead Width	B	.012	.015	.017	0.30	0.38	0.44
Pin 1 Corner Chamfer	CH	.025	.035	.045	0.64	0.89	1.14
Mold Draft Angle Top	α	5	10	15	5	10	15
Mold Draft Angle Bottom	β	5	10	15	5	10	15

***** Controlling Parameter

Notes:

Dimensions D and E1 do not include mold flash or protrusions. Mold flash or protrusions shall not exceed .010" (0.254mm) per side.

REF: Reference Dimension, usually without tolerance, for information purposes only.
See ASME Y14.5M

JEDEC Equivalent: MS-026

Drawing No. C04-076

Revised 07-22-05

44-Lead Plastic Quad Flat, No Lead Package (ML) - 8x8 mm Body (QFN)

Note: For the most current package drawings, please see the Microchip Packaging Specification located at http://www.microchip.com/packaging

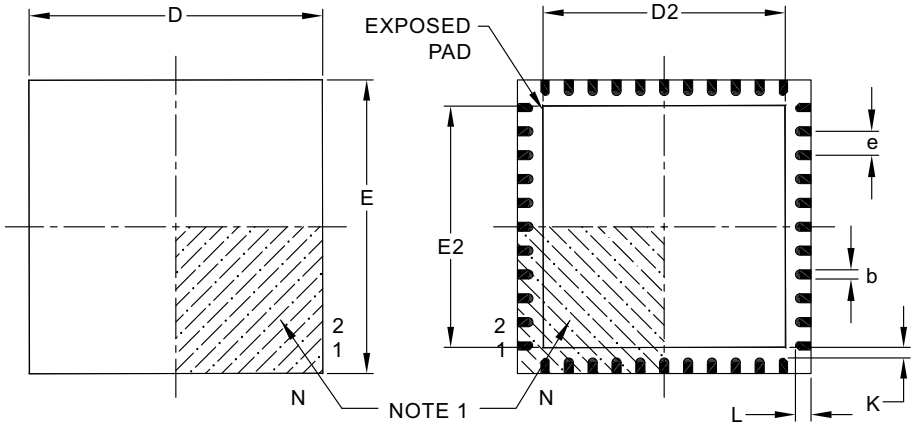

TOP VIEW **BOTTOM VIEW**

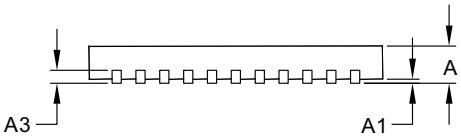

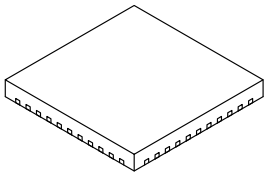

Units		MILLIMETERS		
Dimension Limits		MIN	NOM	MAX
Number of Pins	N		44	
Pitch	e		0.65 BSC	
Overall Height	A	0.80	0.90	1.00
Standoff	A1	0.00	0.02	0.05
Contact Thickness	A3		0.20 REF	
Overall Width	E		8.00 BSC	
Exposed Pad Width	E2	6.30	6.45	6.80
Overall Length	D		8.00 BSC	
Exposed Pad Length	D2	6.30	6.45	6.80
Contact Width	b	0.25	0.30	0.38
Contact Length §	L	0.30	0.40	0.50
Contact-to-Exposed Pad §	K	0.20	—	—

Notes:
1. Pin 1 visual index feature may vary, but must be located within the hatched area.
2. § Significant Characteristic
3. Package is saw singulated
4. Dimensioning and tolerancing per ASME Y14.5M
   BSC: Basic Dimension. Theoretically exact value shown without tolerances.
   REF: Reference Dimension, usually without tolerance, for information purposes only.

Microchip Technology Drawing No. C04–103, Sept. 8, 2006

© 2006-2014 Microchip Technology Inc.

THE MICROCHIP WEB SITE

Microchip provides online support via our WWW site at www.microchip.com. This web site is used as a means to make files and information easily available to customers. Accessible by using your favorite Internet browser, the web site contains the following information:

- **Product Support** – Data sheets and errata, application notes and sample programs, design resources, user's guides and hardware support documents, latest software releases and archived software
- **General Technical Support** – Frequently Asked Questions (FAQ), technical support requests, online discussion groups, Microchip consultant program member listing
- **Business of Microchip** – Product selector and ordering guides, latest Microchip press releases, listing of seminars and events, listings of Microchip sales offices, distributors and factory representatives

CUSTOMER CHANGE NOTIFICATION SERVICE

Microchip's customer notification service helps keep customers current on Microchip products. Subscribers will receive e-mail notification whenever there are changes, updates, revisions or errata related to a specified product family or development tool of interest.

To register, access the Microchip web site at www.microchip.com. Under "Support", click on "Customer Change Notification" and follow the registration instructions.

CUSTOMER SUPPORT

Users of Microchip products can receive assistance through several channels:

- Distributor or Representative
- Local Sales Office
- Field Application Engineer (FAE)
- Technical Support

Customers should contact their distributor, representative or Field Application Engineer (FAE) for support. Local sales offices are also available to help customers. A listing of sales offices and locations is included in the back of this document.

Technical support is available through the web site at: http://microchip.com/support

NOTES:

© 2006-2014 Microchip Technology Inc.

APPENDIX A: REVISION HISTORY

Revision A (June 2006)

- Initial release of this document.

Revision B (August 2006)

This revision includes:

Updated **Section 5.0 "Interrupts"** to include INTTREG register.

Updated device configuration registers to include FBS Boot Code Segment and FOSCEL Oscillator Selection configuration registers (see **Section 18.10 "Device Configuration Registers"**).

Updated Electrical Characteristics:

- I_{IDLE} Parameter DC43f Max Value revised to 87 ma (see Table 21-6)

Typographical corrections:

- dsPIC30F1010/2020 Port Registers (see Table 6-1)
  - TRISA SFR bit 9 corrected to "TRISA9"
  - TRISD SFR Reset State corrected to "`0000 0000 0000 0011`"
- dsPIC30F2023 Port Registers (see Table 6-2)
  - TRISA SFR bit 0 corrected to "unused"
  - PORTA SFR bit 0 corrected to "unused"
  - LATA SFR bit 0 corrected to "unused"
  - TRISD SFR bit 0 corrected to "TRISD0"
  - PORTD SFR bit 0 corrected to "RD0"
  - LATD SFR bit 0 corrected to "LATD0"
  - TRISD SFR reset state corrected to "`0000 0000 0000 0011`"
- dsPIC30F1010/202X CNEN1 SFR reset state corrected to "`0000 0000 0000 0000`" (see Table 6-3)
- PWMCONx (see Register 12-5)
  - Bit 13 description corrected to "TRGSTAT"
  - Bit 10 description corrected to "TRGIEN"
- ALTDTRx (see Register 12-9)
  - Bits 15-14 corrected to "unused"
- ADCPC1 (see Register 16-6)
  - TRGSRC2<4:0> corrected to include bit 4

Revision C (November 2006)

This revision includes:

Updated RC, EC and HS Crystal operating frequencies for Industrial and Extended Temperatures.

Revised SPI section to reflect updated operating frequencies (see **Section 13.0 "Serial Peripheral Interface (SPI)"**).

Revised oscillator configurations (see **Section 18.3 "Oscillator Configurations"**).

Updated Electrial Characteristics:

- Supply voltage parameter DC11 minimum value changed to 3.0V (see Table 21-4)
- Operating current (I_{DD}) (see Table 21-5)
- Idle current (I_{IDLE}) (see Table 21-6)
- I/O Pin Input specifications (see Table 21-8)
- I/O Pin Output specifications (see Table 21-9)
- External Clock Timing (see Figure 21-2 and Table 21-12)
- PLL Clock Timing (see Table 21-13)
- Internal RC Accuracy (see Table 21-15)
- Power-up Timer Period (see Table 21-18)

Revision D (March 2014)

Removed the 'Preliminary' status from the data sheet.

NOTES:

© 2006-2014 Microchip Technology Inc.

INDEX

A

A/D 169
    Configuring Analog Port 188
A/D Control Register (ADCON) 171
A/D Convert Pair Control Register #0 (ADCPC0) 175
A/D Convert Pair Control Register #1 (ADCPC1) 177
A/D Convert Pair Control Register #2 (ADCPC2) 179
A/D Port Configuration Register (ADPCFG) 174
A/D Status Register (ADSTAT) 173
AC Characteristics 240
    Load Conditions 240
AC Temperature and Voltage Specifications 240
ADC Register Map 190
Address Generator Units 41
Alternate Vector Table 51
Analog Comparator Control Register Map 195
Assembler
    MPASM Assembler 228
Automatic Clock Stretch 156
    During 10-bit Addressing (STREN = 1) 156
    During 7-bit Addressing (STREN = 1) 156
    Receive Mode 156
    Transmit Mode 156

B

Band Gap Start-up Time
    Requirements 248
    Timing Characteristics 248
Barrel Shifter 27
Baud Rate Error Calculation (BRGH = 0) 162
Bit-Reversed Addressing 45
    Example 45
    Implementation 45
    Modifier Values (table) 46
    Sequence Table (16-Entry) 46
Block Diagrams
    16-bit Timer1 Module 88
    DSP Engine 24
    dsPIC30F1010 10
    dsPIC30F2020 13
    dsPIC30F2023 16
    External Power-on Reset Circuit 212
    I^2C 154
    Input Capture Mode 97
    Oscillator System 198
    Output Compare Mode 101
    Reset System 210
    Shared Port Structure 77
    SPI 146
    UART 161

C

C Compilers
    MPLAB XC Compilers 228
CLKO and I/O Timing
    Characteristics 245
    Requirements 245
Code Examples
    Erasing a Row of Program Memory 83
    Initiating a Programming Sequence 84
    Loading Write Latches 84
Code Protection 197
Comparator Control x Register (CMPCONx) 193
Comparator DAC Control x Register (CMPDACx) 194
Configuring Analog Port Pins 78
Control Registers 82
    NVMADR 82
    NVMADRU 82
    NVMCON 82
    NVMKEY 82
Core Architecture
    Overview 19
Core Register Map 37, 38
Customer Change Notification Service 273
Customer Notification Service 273
Customer Support 273

D

Data Access from Program Memory Using
    Program Space Visibility 32
Data Accumulators and Adder/Subtracter 25
    Data Space Write Saturation 27
    Overflow and Saturation 25
    Round Logic 26
    Write Back 26
Data Address Space 33
    Alignment 36
    Alignment (Figure) 36
    MCU and DSP (MAC Class) Instructions 35
    Memory Map 33, 34
    Near Data Space 37
    Software Stack 37
    Spaces 36
    Width 36
DC Characteristics
    I/O Pin Input Specifications 238
    I/O Pin Output Specifications 239
    Idle Current (I_{IDLE}) 235
    Operating Current (I_{DD}) 233
    Power-Down Current (I_{PD}) 237
    Program and EEPROM 239
Demo/Development Boards, Evaluation and
    Starter Kits 230
Development Support 227
    Third-Party Tools 230
Device Configuration Register Map 218
Device Configuration Registers 215
Device Overview 9
Divide Support 22
DSP Engine 23
    Multiplier 25
dsPIC30F2020 Block Diagram 13
Dual Output Compare Match Mode 102
    Continuous Pulse Mode 102
    Single Pulse Mode 102

E

Electrical Characteristics 231
    AC 240
Equations
    I^2C 158
    Relationship Between Device and
        SPI Clock Speed 148
    UART Baud Rate with BRGH = 0 162
    UART Baud Rate with BRGH = 1 162
Errata 8

External Clock Input 207
External Clock Timing Characteristics
Type A, B and C Timer 249
External Clock Timing Requirements 241
Type A Timer 249
Type B Timer 250
Type C Timer 250
External Interrupt Requests 51

F

Fast Context Saving 51
Firmware Instructions 219
Flash Program Memory 81
In-Circuit Serial Programming (ICSP) 81
Run-Time Self-Programming (RTSP) 81
Table Instruction Operation Summary 81

I

I/O Pin Specifications
Input 239
Output 239
I/O Ports 77
Parallel I/O (PIO) 77
I^2C 153
I^2C 10-bit Slave Mode Operation 155
Reception 155
Transmission 155
I^2C 7-bit Slave Mode Operation 155
Reception 155
Transmission 155
I^2C Master Mode
Baud Rate Generator 158
Clock Arbitration 158
Multi-Master Communication, Bus Collision and Bus Arbitration 158
Reception 157
Transmission 157
I^2C Module
Addresses 155
Bus Data Timing Characteristics
Master Mode 259
Slave Mode 261
Bus Data Timing Requirements
Master Mode 260
Slave Mode 262
Bus Start/Stop Bits Timing Characteristics
Master Mode 259
Slave Mode 261
General Call Address Support 157
Interrupts 156
IPMI Support 157
Master Operation 157
Master Support 157
Operating Function Description 153
Operation During CPU Sleep and Idle Modes 158
Pin Configuration 153
Programmer's Model 153
Registers 153
Slope Control 157
Software Controlled Clock Stretching (STREN = 1) 156
Various Modes 153
I^2C Register Map 159
Idle Current (IIDLE) 235
In-Circuit Debugger 217
In-Circuit Serial Programming (ICSP) 197
Initialization Condition for RCON Register Case 1 213
Initialization Condition for RCON Register Case 2 213
Input Capture (CAPX) Timing Characteristics 251
Input Capture Interrupts 99
Input Capture Module 97
Simple Capture Event Mode 98
Sleep and Idle Modes 99
Input Capture Register Map 100
Input Capture Timing Requirements 251
Input Change Notification 78
Input Change Notification Register Map 80
Instruction Addressing Modes 41
File Register Instructions 41
Fundamental Modes Supported 41
MAC Instructions 42
MCU Instructions 42
Move and Accumulator Instructions 42
Other Instructions 42
Instruction Set 219
Instruction Set Overview 222
Inter-Integrated Circuit. *See* I^2C.
Internal Clock Timing Examples 242
Internet Address 273
Interrupt Control and Status Register (INTTREG) 74
Interrupt Control Register 1 (INTCON1) 52
Interrupt Control Register 2 (INTCON2) 54
Interrupt Controller Register Map 75
Interrupt Enable Control Register 1 (IEC1) 61
Interrupt Enable Control Register 2 (IEC2) 62
Interrupt Flag Status Register 0 (IFS0) 55
Interrupt Flag Status Register 1 (IFS1) 57
Interrupt Flag Status Register 2 (IFS2) 58
Interrupt Priority 48
Interrupt Priority Control Register 0 (IPC0) 63
Interrupt Priority Control Register 1 (IPC1) 64
Interrupt Priority Control Register 10 (IPC10) 73
Interrupt Priority Control Register 2 (IPC2) 65
Interrupt Priority Control Register 3 (IPC3) 66
Interrupt Priority Control Register 4 (IPC4) 67
Interrupt Priority Control Register 5 (IPC5) 68
Interrupt Priority Control Register 6 (IPC6) 69
Interrupt Priority Control Register 7 (IPC7) 70
Interrupt Priority Control Register 8 (IPC8) 71
Interrupt Priority Control Register 9 (IPC9) 72
Interrupt Sequence 51
Interrupt Stack Frame 51
Interrupts 47
Traps 49

L

Leading Edge Blanking Control Register (LEBCONx) 120
Linear Feedback Register (LFSR) 202
Load Conditions 240

M

Memory Organization 29
Microchip Internet Web Site 273
Modulo Addressing 43
Applicability 45
Operation Example 44
Start and End Address 43
W Address Register Selection 43
MPLAB Assembler, Linker, Librarian 228
MPLAB ICD 3 In-Circuit Debugger 229
MPLAB PM3 Device Programmer 229
MPLAB REAL ICE In-Circuit Emulator System 229

© 2006-2014 Microchip Technology Inc.

MPLAB X Integrated Development
Environment Software 227
MPLAB X SIM Software Simulator 229
MPLIB Object Librarian 228
MPLINK Object Linker 228

N

NVM Register Map 85

O

OC/PWM Module Timing Characteristics 252
Operating Current (IDD) 233
Oscillator
System Overview 197
Oscillator Configurations 205
Fail-Safe Clock Monitor 208
Initial Clock Source Selection 206
Phase Locked Loop (PLL) 206
Start-up Timer (OST) 206
Oscillator Control Register (OSCCON) 199
Oscillator Selection 197
Oscillator Selection Configuration Bits (FOSC) 204
Oscillator Selection Configuration Bits (FOSCSEL) 203
Oscillator Start-up Timer
Timing Characteristics 246
Timing Requirements 247
Oscillator Tuning Register (OSCTUN) 201
Oscillator Tuning Register 2 (OSCTUN2) 202
Output Compare Interrupts 104
Output Compare Module 101
Timing Characteristics 251
Timing Requirements 251
Output Compare Operation During CPU Idle Mode 103
Output Compare Register Map 105
Output Compare Sleep Mode Operation 103

P

Packaging Information
Marking 267
PICkit 3 In-Circuit Debugger/Programmer 229
Pinout Descriptions 11, 14, 17
PLL Clock Timing Specifications 242
POR. *See* Power-on Reset.
Port Register Map (dsPIC30F1010/2020) 79
Port Register Map (dsPIC30F2023) 80
Port Write/Read Example 78
Power Supply PWM 107
Power Supply PWM Module
Timing Requirements 253
Power Supply PWM Register Map 142
Power-Down Current (IPD) 237
Power-on Reset (POR) 197
Oscillator Start-up Timer (OST) 197
Power-up Timer (PWRT) 197
Power-Saving Modes 214
Idle 215
Sleep 214
Power-Saving Modes (Sleep and Idle) 197
Power-up Timer
Timing Characteristics 246
Timing Requirements 247
Primary Time Base Register (PTPER) 111
Product Identification System 282
Program Address Space 29
Construction 30
Data Access from Program Memory Using
Table Instructions 31
Data Access from, Address Generation 30
Memory Map 29
Table Instructions
TBLRDH 31
TBLRDL 31
TBLWTH 31
TBLWTL 31
Program and EEPROM Characteristics 239
Program Counter 20
Program Data Table Access 32
Program Space Visibility
Window into Program Space Operation 33
Programmer's Model 20
Diagram 21
Programming Operations 83
Algorithm for Program Flash 83
Erasing a Row of Program Memory 83
Initiating the Programming Sequence 84
Loading Write Latches 84
Programming, Device Instructions 219
PWM Alternate Dead-Time Register (ALTDTRx) 115
PWM Control Register (PWMCONx) 112
PWM Dead-Time Register (DTRx) 114
PWM Fault Current-Limit Control
Register (FCLCONx) 117
PWM I/O Control Register (IOCONx) 116
PWM Master Duty Cycle Register (MDC) 112
PWM Phase-Shift Register (PHASEx) 114
PWM Time Base Control Register (PTCON) 110
PWM Trigger Compare Value Register (TRIGx) 119
PWM Trigger Control Register (TRGCONx) 115

R

Register Map
ADC Register 190
Analog Comparator Control Register 195
Core Registers 38
Device Configuration Register 218
I^2C Register 159
Input Capture Registers 100
Input Change Notification Registers 80
Interrupt Controller Registers 75
NVM Registers 85
Output Compare Registers 105
Port Registers (dsPIC30F1010/2020) 79
Port Registers (dsPIC30F2023) 80
Power Supply PWM Registers 142
SPI1 Register 152
System Integration Register (dsPIC30F202X) 218
Timer 1 Registers 89
Timer2/3 Registers 95
UART1 Register 168

Registers
ADCON ... 171
ADCPC0 ... 175
ADCPC1 ... 177
ADCPC2 ... 179
ADPCFG ... 174
ADSTAT ... 173
ALTDTRx ... 115
CMPCONx ... 193
CMPDACx ... 194
DTRx ... 114
FCLCONx ... 117
FOSC ... 204
FOSCSEL ... 203
IEC1 ... 61
IEC2 ... 62
IFS1 ... 57
IFS2 ... 58
IFSO ... 55
INTCON1 ... 52
INTCON2 ... 54
INTTREG ... 74
IOCONx ... 116
IPC0 ... 63
IPC1 ... 64
IPC10 ... 73
IPC2 ... 65
IPC3 ... 66
IPC4 ... 67
IPC5 ... 68
IPC6 ... 69
IPC7 ... 70
IPC8 ... 71
IPC9 ... 72
LEBCONx ... 120
LFSR ... 202
MDC ... 112
OSCCON ... 199
OSCTUN ... 201
OSCTUN2 ... 202
PHASEx ... 114
PTCON ... 110
PTPER ... 111
PWMCONx ... 112
SEVTCMP ... 111
SPIxCON1 (SPIx Control 1) ... 150
SPIxCON2 (SPIx Control 2) ... 151
SPIxSTAT (SPIx Status and Control) ... 149
TRGCONx ... 115
TRIGx ... 119
U1MODE ... 164
U1STA ... 166
Reset ... 197, 209
Reset Sequence ... 49
Reset Sources ... 49
Reset Timing Characteristics ... 246
Reset Timing Requirements ... 247
Resets
POR ... 211
POR with Long Crystal Start-up Time ... 212
POR, Operating without FSCM and PWRT ... 212
RTSP Operation ... 82

S

Sales and Support ... 283
Serial Peripheral Interface (SPI) ... 145
Simple Capture Event Mode
Capture Buffer Operation ... 98
Capture Prescaler ... 98
Hall Sensor Mode ... 98
Input Capture in CPU Idle Mode ... 99
Timer2 and Timer3 Selection Mode ... 98
Simple OC/PWM Mode Timing Requirements ... 252
Simple Output Compare Match Mode ... 102
Simple PWM Mode ... 102
Period ... 103
Software Stack Pointer, Frame Pointer ... 20
CALL Stack Frame ... 37
Special Event Compare Register (SEVTCMP) ... 111
SPI
Master, Frame Master Connection ... 147
Master/Slave Connection ... 147
Slave, Frame Master Connection ... 148
Slave, Frame Slave Connection ... 148
SPI Mode
SPI1 Register Map ... 152
SPI Module
Timing Characteristics
Master Mode (CKE = 0) ... 254
Master Mode (CKE = 1) ... 255
Slave Mode (CKE = 1) ... 256, 257
Timing Requirements
Master Mode (CKE = 0) ... 254
Master Mode (CKE = 1) ... 255
Slave Mode (CKE = 0) ... 256
Slave Mode (CKE = 1) ... 258
SPI1 Register Map ... 152
STATUS Register ... 20
Symbols used in Opcode Descriptions ... 220
System Integration ... 197
System Integration Register Map (dsPIC30F202X) ... 218

T

Temperature and Voltage Specifications
AC ... 240
Timer1 Module ... 87
16-bit Asynchronous Counter Mode ... 87
16-bit Synchronous Counter Mode ... 87
16-bit Timer Mode ... 87
Gate Operation ... 88
Interrupt ... 88
Operation During Sleep Mode ... 88
Prescaler ... 88
Timer1 Register Map ... 89
Timer2 and Timer3 Selection Mode ... 102
Timer2/3 Module ... 91
16-bit Timer Mode ... 91
32-bit Synchronous Counter Mode ... 91
32-bit Timer Mode ... 91
ADC Event Trigger ... 94
Gate Operation ... 94
Interrupt ... 94
Operation During Sleep Mode ... 94
Timer Prescaler ... 94
Timer2/3 Register Map ... 95

© 2006-2014 Microchip Technology Inc.

Timing Characteristics
A/D Conversion
10-Bit High-speed (CHPS = 01, SIMSAM = 0, ASAM = 0, SSRC = 000) 264
Band Gap Start-up Time 248
CLKO and I/O 245
External Clock 240
I^2C Bus Data
Master Mode 259
Slave Mode 261
I^2C Bus Start/Stop Bits
Master Mode 259
Slave Mode 261
Input Capture (CAPX) 251
Motor Control PWM Module 253
Motor Control PWM Module Fault 253
OC/PWM Module 252
Oscillator Start-up Timer 246
Output Compare Module 251
Power-up Timer 246
Reset 246
SPI Module
Master Mode (CKE = 0) 254
Master Mode (CKE = 1) 255
Slave Mode (CKE = 0) 256
Slave Mode (CKE = 1) 257
Type A, B and C Timer External Clock 249
Watchdog Timer 246
Timing Diagrams
PWM Output 104
Time-out Sequence on Power-up ($\overline{MCLR}$ Not Tied to VDD), Case 1 211
Time-out Sequence on Power-up ($\overline{MCLR}$ Not Tied to VDD), Case 2 212
Time-out Sequence on Power-up ($\overline{MCLR}$ Tied to VDD) 211
Timing Diagrams and Specifications
DC Characteristics - Internal RC Accuracy 242
Timing Diagrams.See Timing Characteristics.
Timing Requirements
Band Gap Start-up Time 248
Brown-out Reset 247
CLKO and I/O 245
External Clock 241
I^2C Bus Data (Master Mode) 260
I^2C Bus Data (Slave Mode) 262
Input Capture 251
Motor Control PWM Module 253
Oscillator Start-up Timer 247
Output Compare Module 251
Power-up Timer 247
Reset 247
Simple OC/PWM Mode 252
SPI Module
Master Mode (CKE = 0) 254
Master Mode (CKE = 1) 255
Slave Mode (CKE = 0) 256
Slave Mode (CKE = 1) 258
Type A Timer External Clock 249
Type B Timer External Clock 250
Type C Timer External Clock 250
Watchdog Timer 247
Timing Specifications
PLL Clock 242
Traps
Trap Sources 49

U

UART
Baud Rate Generator (BRG) 162
Enabling and Setting Up UART 162
IrDA
Built-in Encoder and Decoder 163
Receiving
8-bit or 9-bit Data Mode 163
Transmitting
8-bit Data Mode 163
9-bit Data Mode 163
Break and Sync Sequence 163
UART1 Mode Register (U1MODE) 164
UART1 Register Map 168
UART1 Status and Control Register (U1STA) 166
Unit ID Locations 197
Universal Asynchronous Receiver Transmitter. *See* UART.

W

Wake-up from Sleep 197
Wake-up from Sleep and Idle 51
Watchdog Timer
Timing Characteristics 246
Timing Requirements 247
Watchdog Timer (WDT) 197, 214
Enabling and Disabling 214
Operation 214
WWW Address 273
WWW, On-Line Support 8

NOTES:

© 2006-2014 Microchip Technology Inc.

PRODUCT IDENTIFICATION SYSTEM

To order or obtain information, e.g., on pricing or delivery, refer to the factory or the listed sales office.

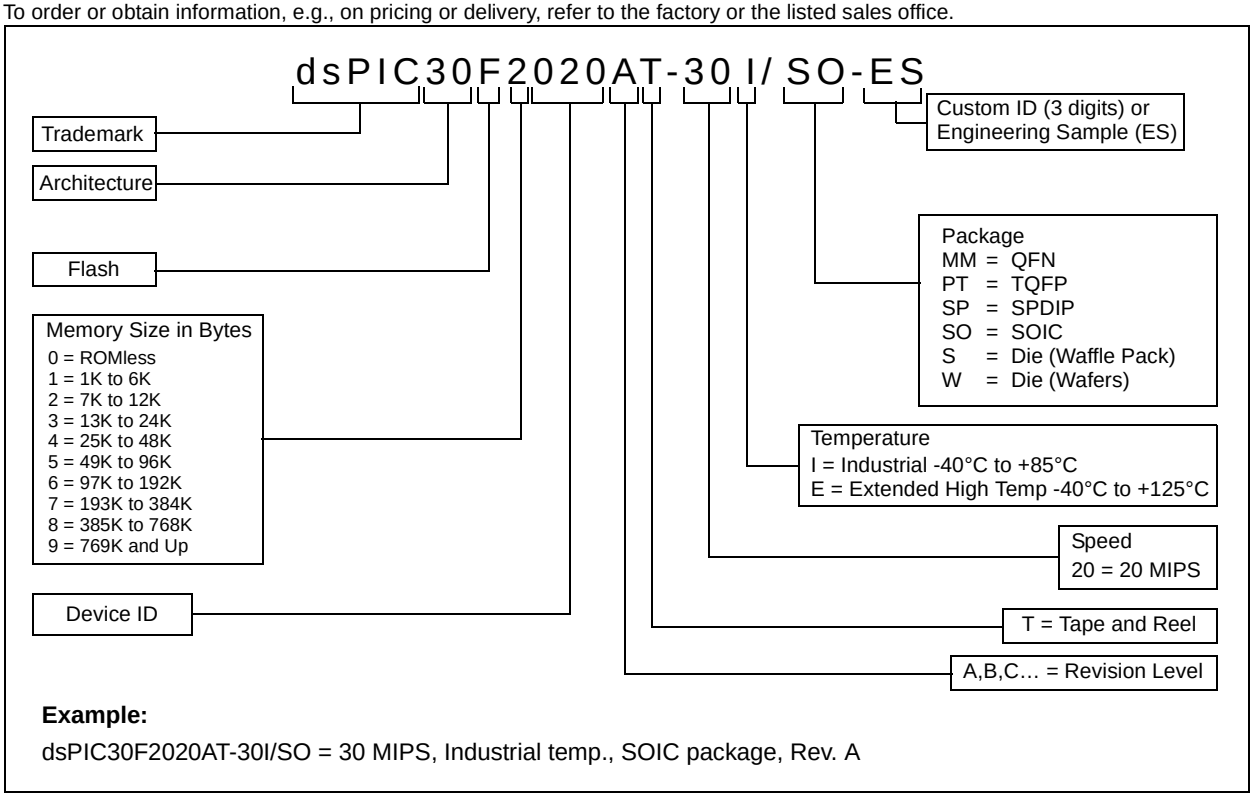

Example:

dsPIC30F2020AT-30I/SO = 30 MIPS, Industrial temp., SOIC package, Rev. A

NOTES:

© 2006-2014 Microchip Technology Inc.

Note the following details of the code protection feature on Microchip devices:

- Microchip products meet the specification contained in their particular Microchip Data Sheet.
- Microchip believes that its family of products is one of the most secure families of its kind on the market today, when used in the intended manner and under normal conditions.
- There are dishonest and possibly illegal methods used to breach the code protection feature. All of these methods, to our knowledge, require using the Microchip products in a manner outside the operating specifications contained in Microchip's Data Sheets. Most likely, the person doing so is engaged in theft of intellectual property.
- Microchip is willing to work with the customer who is concerned about the integrity of their code.
- Neither Microchip nor any other semiconductor manufacturer can guarantee the security of their code. Code protection does not mean that we are guaranteeing the product as "unbreakable."

Code protection is constantly evolving. We at Microchip are committed to continuously improving the code protection features of our products. Attempts to break Microchip's code protection feature may be a violation of the Digital Millennium Copyright Act. If such acts allow unauthorized access to your software or other copyrighted work, you may have a right to sue for relief under that Act.

Information contained in this publication regarding device applications and the like is provided only for your convenience and may be superseded by updates. It is your responsibility to ensure that your application meets with your specifications. MICROCHIP MAKES NO REPRESENTATIONS OR WARRANTIES OF ANY KIND WHETHER EXPRESS OR IMPLIED, WRITTEN OR ORAL, STATUTORY OR OTHERWISE, RELATED TO THE INFORMATION, INCLUDING BUT NOT LIMITED TO ITS CONDITION, QUALITY, PERFORMANCE, MERCHANTABILITY OR FITNESS FOR PURPOSE**.** Microchip disclaims all liability arising from this information and its use. Use of Microchip devices in life support and/or safety applications is entirely at the buyer's risk, and the buyer agrees to defend, indemnify and hold harmless Microchip from any and all damages, claims, suits, or expenses resulting from such use. No licenses are conveyed, implicitly or otherwise, under any Microchip intellectual property rights.

QUALITY MANAGEMENT SYSTEM
CERTIFIED BY DNV
═ ISO/TS 16949 ═

Trademarks

The Microchip name and logo, the Microchip logo, dsPIC, FlashFlex, KEELOQ, KEELOQ logo, MPLAB, PIC, PICmicro, PICSTART, PIC^{32} logo, rfPIC, SST, SST Logo, SuperFlash and UNI/O are registered trademarks of Microchip Technology Incorporated in the U.S.A. and other countries.

FilterLab, Hampshire, HI-TECH C, Linear Active Thermistor, MTP, SEEVAL and The Embedded Control Solutions Company are registered trademarks of Microchip Technology Incorporated in the U.S.A.

Silicon Storage Technology is a registered trademark of Microchip Technology Inc. in other countries.

Analog-for-the-Digital Age, Application Maestro, BodyCom, chipKIT, chipKIT logo, CodeGuard, dsPICDEM, dsPICDEM.net, dsPICworks, dsSPEAK, ECAN, ECONOMONITOR, FanSense, HI-TIDE, In-Circuit Serial Programming, ICSP, Mindi, MiWi, MPASM, MPF, MPLAB Certified logo, MPLIB, MPLINK, mTouch, Omniscient Code Generation, PICC, PICC-18, PICDEM, PICDEM.net, PICkit, PICtail, REAL ICE, rfLAB, Select Mode, SQI, Serial Quad I/O, Total Endurance, TSHARC, UniWinDriver, WiperLock, ZENA and Z-Scale are trademarks of Microchip Technology Incorporated in the U.S.A. and other countries.

SQTP is a service mark of Microchip Technology Incorporated in the U.S.A.

GestIC and ULPP are registered trademarks of Microchip Technology Germany II GmbH & Co. KG, a subsidiary of Microchip Technology Inc., in other countries.

All other trademarks mentioned herein are property of their respective companies.

© 2006-2014, Microchip Technology Incorporated, Printed in the U.S.A., All Rights Reserved.

Printed on recycled paper.

ISBN: 978-1-62077-998-9

Microchip received ISO/TS-16949:2009 certification for its worldwide headquarters, design and wafer fabrication facilities in Chandler and Tempe, Arizona; Gresham, Oregon and design centers in California and India. The Company's quality system processes and procedures are for its PIC® MCUs and dsPIC® DSCs, KEELOQ® code hopping devices, Serial EEPROMs, microperipherals, nonvolatile memory and analog products. In addition, Microchip's quality system for the design and manufacture of development systems is ISO 9001:2000 certified.

Worldwide Sales and Service

AMERICAS

Corporate Office
2355 West Chandler Blvd.
Chandler, AZ 85224-6199
Tel: 480-792-7200
Fax: 480-792-7277
Technical Support:
http://www.microchip.com/support
Web Address:
www.microchip.com

Atlanta
Duluth, GA
Tel: 678-957-9614
Fax: 678-957-1455

Austin, TX
Tel: 512-257-3370

Boston
Westborough, MA
Tel: 774-760-0087
Fax: 774-760-0088

Chicago
Itasca, IL
Tel: 630-285-0071
Fax: 630-285-0075

Cleveland
Independence, OH
Tel: 216-447-0464
Fax: 216-447-0643

Dallas
Addison, TX
Tel: 972-818-7423
Fax: 972-818-2924

Detroit
Novi, MI
Tel: 248-848-4000

Houston, TX
Tel: 281-894-5983

Indianapolis
Noblesville, IN
Tel: 317-773-8323
Fax: 317-773-5453

Los Angeles
Mission Viejo, CA
Tel: 949-462-9523
Fax: 949-462-9608

New York, NY
Tel: 631-435-6000

San Jose, CA
Tel: 408-735-9110

Canada - Toronto
Tel: 905-673-0699
Fax: 905-673-6509

ASIA/PACIFIC

Asia Pacific Office
Suites 3707-14, 37th Floor
Tower 6, The Gateway
Harbour City, Kowloon
Hong Kong
Tel: 852-2401-1200
Fax: 852-2401-3431

Australia - Sydney
Tel: 61-2-9868-6733
Fax: 61-2-9868-6755

China - Beijing
Tel: 86-10-8569-7000
Fax: 86-10-8528-2104

China - Chengdu
Tel: 86-28-8665-5511
Fax: 86-28-8665-7889

China - Chongqing
Tel: 86-23-8980-9588
Fax: 86-23-8980-9500

China - Hangzhou
Tel: 86-571-8792-8115
Fax: 86-571-8792-8116

China - Hong Kong SAR
Tel: 852-2943-5100
Fax: 852-2401-3431

China - Nanjing
Tel: 86-25-8473-2460
Fax: 86-25-8473-2470

China - Qingdao
Tel: 86-532-8502-7355
Fax: 86-532-8502-7205

China - Shanghai
Tel: 86-21-5407-5533
Fax: 86-21-5407-5066

China - Shenyang
Tel: 86-24-2334-2829
Fax: 86-24-2334-2393

China - Shenzhen
Tel: 86-755-8864-2200
Fax: 86-755-8203-1760

China - Wuhan
Tel: 86-27-5980-5300
Fax: 86-27-5980-5118

China - Xian
Tel: 86-29-8833-7252
Fax: 86-29-8833-7256

China - Xiamen
Tel: 86-592-2388138
Fax: 86-592-2388130

China - Zhuhai
Tel: 86-756-3210040
Fax: 86-756-3210049

ASIA/PACIFIC

India - Bangalore
Tel: 91-80-3090-4444
Fax: 91-80-3090-4123

India - New Delhi
Tel: 91-11-4160-8631
Fax: 91-11-4160-8632

India - Pune
Tel: 91-20-3019-1500

Japan - Osaka
Tel: 81-6-6152-7160
Fax: 81-6-6152-9310

Japan - Tokyo
Tel: 81-3-6880- 3770
Fax: 81-3-6880-3771

Korea - Daegu
Tel: 82-53-744-4301
Fax: 82-53-744-4302

Korea - Seoul
Tel: 82-2-554-7200
Fax: 82-2-558-5932 or
82-2-558-5934

Malaysia - Kuala Lumpur
Tel: 60-3-6201-9857
Fax: 60-3-6201-9859

Malaysia - Penang
Tel: 60-4-227-8870
Fax: 60-4-227-4068

Philippines - Manila
Tel: 63-2-634-9065
Fax: 63-2-634-9069

Singapore
Tel: 65-6334-8870
Fax: 65-6334-8850

Taiwan - Hsin Chu
Tel: 886-3-5778-366
Fax: 886-3-5770-955

Taiwan - Kaohsiung
Tel: 886-7-213-7830

Taiwan - Taipei
Tel: 886-2-2508-8600
Fax: 886-2-2508-0102

Thailand - Bangkok
Tel: 66-2-694-1351
Fax: 66-2-694-1350

EUROPE

Austria - Wels
Tel: 43-7242-2244-39
Fax: 43-7242-2244-393

Denmark - Copenhagen
Tel: 45-4450-2828
Fax: 45-4485-2829

France - Paris
Tel: 33-1-69-53-63-20
Fax: 33-1-69-30-90-79

Germany - Dusseldorf
Tel: 49-2129-3766400

Germany - Munich
Tel: 49-89-627-144-0
Fax: 49-89-627-144-44

Germany - Pforzheim
Tel: 49-7231-424750

Italy - Milan
Tel: 39-0331-742611
Fax: 39-0331-466781

Italy - Venice
Tel: 39-049-7625286

Netherlands - Drunen
Tel: 31-416-690399
Fax: 31-416-690340

Poland - Warsaw
Tel: 48-22-3325737

Spain - Madrid
Tel: 34-91-708-08-90
Fax: 34-91-708-08-91

Sweden - Stockholm
Tel: 46-8-5090-4654

UK - Wokingham
Tel: 44-118-921-5800
Fax: 44-118-921-5820

03/13/14

© 2006-2014 Microchip Technology Inc.

Mouser Electronics

Authorized Distributor

Click to View Pricing, Inventory, Delivery & Lifecycle Information:

Microchip:
DSPIC30F1010-20E/MM DSPIC30F1010-20E/SO DSPIC30F1010-20E/SP DSPIC30F1010-30I/MM DSPIC30F1010-30I/SO DSPIC30F1010-30I/SP DSPIC30F1010T-30I/MM DSPIC30F1010T-30I/SO DSPIC30F2020-20E/MM DSPIC30F2020-20E/SO DSPIC30F2020-20E/SP DSPIC30F2020-30I/MM DSPIC30F2020-30I/SO DSPIC30F2020-30I/SP DSPIC30F2020T-30I/MM DSPIC30F2020T-30I/SO DSPIC30F2023-20E/ML DSPIC30F2023-20E/PT DSPIC30F2023-30I/ML DSPIC30F2023-30I/PT DSPIC30F2023T-30I/ML DSPIC30F2023T-30I/PT

OCEAN CHIPS
Океан Электроники
Поставка электронных компонентов

Компания «Океан Электроники» предлагает заключение долгосрочных отношений при поставках импортных электронных компонентов на взаимовыгодных условиях!

Наши преимущества:

- Поставка оригинальных импортных электронных компонентов напрямую с производств Америки, Европы и Азии, а так же с крупнейших складов мира;
- Широкая линейка поставок активных и пассивных импортных электронных компонентов (более 30 млн. наименований);
- Поставка сложных, дефицитных, либо снятых с производства позиций;
- Оперативные сроки поставки под заказ (от 5 рабочих дней);
- Экспресс доставка в любую точку России;
- Помощь Конструкторского Отдела и консультации квалифицированных инженеров;
- Техническая поддержка проекта, помощь в подборе аналогов, поставка прототипов;
- Поставка электронных компонентов под контролем ВП;
- Система менеджмента качества сертифицирована по Международному стандарту ISO 9001;
- При необходимости вся продукция военного и аэрокосмического назначения проходит испытания и сертификацию в лаборатории (по согласованию с заказчиком);
- Поставка специализированных компонентов военного и аэрокосмического уровня качества (Xilinx, Altera, Analog Devices, Intersil, Interpoint, Microsemi, Actel, Aeroflex, Peregrine, VPT, Syfer, Eurofarad, Texas Instruments, MS Kennedy, Miteq, Cobham, E2V, MA-COM, Hittite, Mini-Circuits, General Dynamics и др.);

Компания «Океан Электроники» является официальным дистрибьютором и эксклюзивным представителем в России одного из крупнейших производителей разъемов военного и аэрокосмического назначения **«JONHON»**, а так же официальным дистрибьютором и эксклюзивным представителем в России производителя высокотехнологичных и надежных решений для передачи СВЧ сигналов **«FORSTAR»**.

AVIC JONHON

«JONHON» (основан в 1970 г.)

Разъемы специального, военного и аэрокосмического назначения:

(Применяются в военной, авиационной, аэрокосмической, морской, железнодорожной, горно- и нефтедобывающей отраслях промышленности)

«FORSTAR» (основан в 1998 г.)

ВЧ соединители, коаксиальные кабели, кабельные сборки и микроволновые компоненты:

(Применяются в телекоммуникациях гражданского и специального назначения, в средствах связи, РЛС, а так же военной, авиационной и аэрокосмической отраслях промышленности).

FORSTAR®

Телефон: 8 (812) 309-75-97 (многоканальный)
Факс: 8 (812) 320-03-32
Электронная почта: ocean@oceanchips.ru
Web: http://oceanchips.ru/
Адрес: 198099, г. Санкт-Петербург, ул. Калинина, д. 2, корп. 4, лит. А