OMRON

Inverter

MX2/RX Series

DeviceNet Communications Unit

User's Manual

3G3AX-MX2-DRT-E
3G3AX-RX-DRT-E

I581-E1-03

© **OMRON, 2012**

All rights reserved. No part of this publication may be reproduced, stored in a retrieval system, or transmitted, in any form, or by any means, mechanical, electronic, photocopying, recording, or otherwise, without the prior written permission of OMRON.

No patent liability is assumed with respect to the use of the information contained herein. Moreover, because OMRON is constantly striving to improve its high-quality products, the information contained in this manual is subject to change without notice. Every precaution has been taken in the preparation of this manual. Nevertheless, OMRON assumes no responsibility for errors or omissions. Neither is any liability assumed for damages resulting from the use of the information contained in this publication.

Introduction

Thank you for purchasing a DeviceNet Communications Unit (Model: 3G3AX-MX2-DRT-E/ 3G3AX-RX-DRT-E).
This User's Manual describes the installation and wiring of the 3G3AX-MX2-DRT-E/3G3AX-RX-DRT-E and parameter setting method which is required for the operation, as well as troubleshooting and inspection methods.

Intended Audience

This manual is intended for the following personnel, who must also have knowledge of electrical systems (an electrical engineer or the equivalent).

- Personnel in charge of introducing the control equipment
- Personnel in charge of designing the control systems
- Personnel in charge of installing and maintaining the control equipment
- Personnel in charge of managing the control systems and facilities

Notice

This manual contains information you need to know to correctly use the DeviceNet Communications Unit (Model: 3G3AX-MX2-DRT-E/3G3AX-RX-DRT-E).
Before using the DeviceNet Communications Unit, read this manual and gain a full understanding of the information provided herein.
After you finished reading this manual, keep it in a convenient place so that it can be referenced at any time.
Make sure this manual is delivered to the end user.

Manual Configuration

This User's Manual is compiled section by section for user's convenience as follows.

		Outline
Section 1	Outline	This section provides an outline, features, and specifications of the DeviceNet Communications Unit.
Section 2	DeviceNet Communications Unit Mounting and Wiring	This section provides the part names of the DeviceNet Communications Unit and mounting/wiring methods.
Section 3	Network Startup	This section describes inverter parameter settings and DeviceNet settings/startup.
Section 4	Remote I/O	This section describes the configuration method and function of Remote I/O (DeviceNet assembly I/O).
Section 5	Message Communications	This section describes how to read/write inverter parameters by the Message communications function (DeviceNet Explicit Message).
Section 6	Troubleshooting	This section describes the troubleshooting for various problems which may occur in DeviceNet, the inverter, and the DeviceNet Communications Unit.
Appendices		This section contains the general object specifications and AC drive object specifications.

Manual Structure

Page Structure and Symbol Icons

The following page structure and symbol icons are used in this manual.

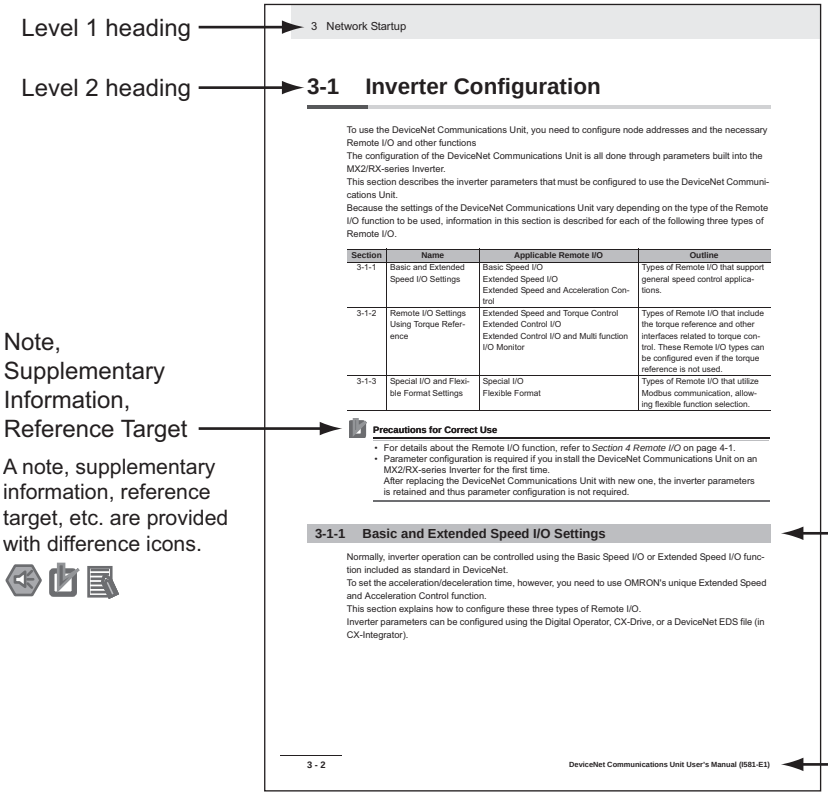

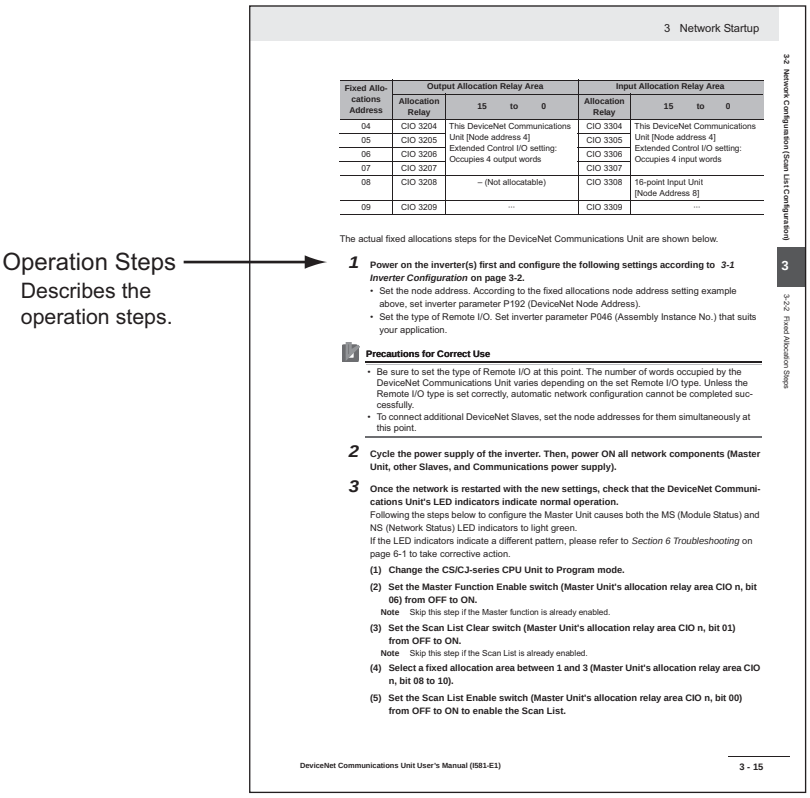

Note The above page is only a sample for illustrative purposes. It is not the actual content of the manual.

Special Information

Special information in this manual is classified as follows:

Precautions for Safe Use

Precautions on what to do and what not to do to ensure safe usage of the product.

Precautions for Correct Use

Precautions on what to do and what not to do to ensure proper operation and performance.

Additional Information

Additional information to read as required.
This information is provided to increase understanding or make operation easier.

Sections in this Manual

1 Outline
2 DeviceNet Communications Unit Mounting and Wiring
3 Network Startup
4 Remote I/O
5 Message Communications
6 Troubleshooting
A Appendices
I Index

CONTENTS

Introduction 1
Manual Configuration 2
Manual Structure 3
Sections in this Manual 5
CONTENTS 6
Read and Understand this Manual 9
Safety Precautions 12
Precautions for Safe Use 14
Precautions for Correct Use 16
Regulations and Standards 18
Trademarks 19
Items to Check After Unpacking 20
Related Manuals 22
Revision History 23

Section 1 Outline

1-1 Outline of DeviceNet Communications Unit 1-2
1-2 Outline of DeviceNet Communications 1-5
1-2-1 Functions 1-5
1-2-2 Features 1-5
1-2-3 Configuration 1-7
1-2-4 Maximum Number of Inverter Connections 1-8
1-3 Specifications 1-10
1-4 Restrictions on Use 1-14
1-4-1 Supported Inverters 1-14
1-4-2 Inverter Safety (ISO13849-1) 1-14
1-4-3 Restrictions 1-15
1-5 Comparison with Conventional Models 1-16

Section 2 DeviceNet Communications Unit Mounting and Wiring

2-1 Name and Setting of Each Component 2-2
2-1-1 Name and Setting of Each Component 2-2
2-1-2 LED Indicators 2-4
2-1-3 Node Address Setting 2-4
2-2 Installation 2-5
2-2-1 Mounting Procedure of DeviceNet Communications Unit on MX2-series Inverter 2-6

2-2-2 Mounting Procedure of DeviceNet Communications Unit on RX-series Inverter 2-9
2-2-3 Operating Environment 2-14
2-2-4 Connector Wiring 2-14

Section 3 Network Startup

3-1 Inverter Configuration 3-2
3-1-1 Basic and Extended Speed I/O Settings 3-2
3-1-2 Remote I/O Settings Using Torque Reference 3-6
3-1-3 Special I/O and Flexible Format Settings 3-9
3-1-4 Utilizing Multi-function Inputs/Outputs for Host 3-12

3-2 Network Configuration (Scan List Configuration) 3-14
3-2-1 EDS File Installation 3-14
3-2-2 Fixed Allocation Steps 3-14
3-2-3 User Allocation Steps (Scan List Configuration) 3-16

3-3 Device Parameters with EDS File 3-21
3-3-1 How to Edit Device Parameters with EDS File 3-21
3-3-2 Restrictions of Edit Device Parameters Function with EDS File 3-22

3-4 Editing Parameters with CX-Drive 3-25
3-4-1 Connecting CX-Drive (via DeviceNet) 3-25
3-4-2 Outline of CX-Drive 3-30

Section 4 Remote I/O

4-1 Remote I/O Configuration 4-2
4-1-1 Remote I/O Types 4-2
4-1-2 Remote I/O Selection 4-3

4-2 Basic and Extended Speed I/O 4-4
4-2-1 Basic Speed I/O (20/70) 4-4
4-2-2 Extended Speed I/O (21/71) 4-5
4-2-3 Extended Speed and Acceleration Control (110/111) 4-7

4-3 Remote I/O with Torque Reference Support 4-10
4-3-1 Torque Control Configuration 4-10
4-3-2 Extended Speed and Torque Control (123/173) 4-11
4-3-3 Extended Control I/O (101/151/153) 4-13
4-3-4 Extended Control I/O and Multi function I/O Monitor (101/153) 4-15

4-4 Special I/O and Flexible Format 4-17
4-4-1 Frequency Reference/RUN Command Selection 4-17
4-4-2 Special I/O (100/150) 4-17
4-4-3 Flexible Format (139/159) 4-20

4-5 When to Input the RUN Command after Establishment of Communications 4-22

Section 5 Message Communications

5-1 Outline of Explicit Message 5-2

5-2 Sending Messages from CS/CJ-series 5-3
5-2-1 How to Issue Explicit Messages by CMND Instruction 5-3
5-2-2 When to Issue/Read an Explicit Message 5-6

5-3 Outline of Message Function and Response 5-8

5-4 Parameter Read/Write (Class 64 hex) 5-11
5-4-1 Supported Service Codes 5-11
5-4-2 Parameter Data Size 5-11
5-4-3 Parameter Read/Write Data 5-12
5-4-4 Saving Changes to Holding Registers (ENTER Command) 5-13

5-4-5 Parameter Class/Instance/Attribute 5-13
5-4-6 Ladder Programming Example 5-14

5-5 Parameter Read/Write (Class 65 hex) 5-15
5-5-1 Supported Service Codes 5-15
5-5-2 Supported Instance and Attribute Codes 5-15

Section 6 Troubleshooting

6-1 Outline of Error Indication 6-2

6-2 Errors on a Communications Line 6-3

6-3 Errors on Inverter or DeviceNet Communications Unit 6-5
6-3-1 Error Codes Related to DeviceNet Communications Error 6-5
6-3-2 Error Codes Related to DeviceNet Communications Unit 6-7
6-3-3 Parameter Setting Error in DeviceNet Communications Unit 6-8

6-4 Errors Related to Message Communications 6-9
6-4-1 FINS Message Errors (CS/CJ-series) 6-9
6-4-2 Explicit Message Errors 6-10

6-5 Special I/O Errors 6-11

6-6 Removing DeviceNet Communications Unit 6-12
6-6-1 How to Remove DeviceNet Communications Unit - MX2-series 6-13
6-6-2 How to Remove DeviceNet Communications Unit - RX-series 6-14

Appendices

A-1 General Object Specifications A-2
A-1-1 Identity Object (Class 01 hex) A-2
A-1-2 Message Router Object (Class 02 hex) A-5
A-1-3 DeviceNet Object (Class 03 hex) A-5
A-1-4 Assembly Object (Class 04 hex) A-6
A-1-5 Connection Object (Class 05 hex) A-7
A-1-6 Discrete Input Point Object (Class 08 hex) A-12
A-1-7 Discrete Output Point Object (Class 09 hex) A-12
A-1-8 Unit Parameter Object (Class 94 hex) A-13

A-2 AC Drive Object Specifications A-14
A-2-1 Motor Data Object (Class 28 hex) A-14
A-2-2 Control Supervisor Object (Class 29 hex) A-15
A-2-3 AC/DC Drive Object (Class 2A hex) A-19

Index

Read and Understand this Manual

Warranty and Limitations of Liability

WARRANTY
OMRON's exclusive warranty is that the products are free from defects in materials and workmanship for a period of one year (or other period if specified) from date of sale by OMRON. OMRON MAKES NO WARRANTY OR REPRESENTATION, EXPRESS OR IMPLIED, REGARDING NONINFRINGEMENT, MERCHANTABILITY, OR FITNESS FOR PARTICULAR PURPOSE OF THE PRODUCTS. ANY BUYER OR USER ACKNOWLEDGES THAT THE BUYER OR USER ALONE HAS DETERMINED THAT THE PRODUCTS WILL SUITABLY MEET THE REQUIREMENTS OF THEIR INTENDED USE. OMRON DISCLAIMS ALL OTHER WARRANTIES, EXPRESS OR IMPLIED.

LIMITATIONS OF LIABILITY
OMRON SHALL NOT BE RESPONSIBLE FOR SPECIAL, INDIRECT, OR CONSEQUENTIAL DAMAGES, LOSS OF PROFITS OR COMMERCIAL LOSS IN ANY WAY CONNECTED WITH THE PRODUCTS, WHETHER SUCH CLAIM IS BASED ON CONTRACT, WARRANTY, NEGLIGENCE, OR STRICT LIABILITY. In no event shall the responsibility of OMRON for any act exceed the individual price of the product on which liability is asserted. IN NO EVENT SHALL OMRON BE RESPONSIBLE FOR WARRANTY, REPAIR, OR OTHER CLAIMS REGARDING THE PRODUCTS UNLESS OMRON'S ANALYSIS CONFIRMS THAT THE PRODUCTS WERE PROPERLY HANDLED, STORED, INSTALLED, AND MAINTAINED AND NOT SUBJECT TO CONTAMINATION, ABUSE, MISUSE, OR INAPPROPRIATE MODIFICATION OR REPAIR.

Application Considerations

SUITABILITY FOR USE
OMRON shall not be responsible for conformity with any standards, codes, or regulations that apply to the combination of products in the customer's application or use of the products. At the customer's request, OMRON will provide applicable third party certification documents identifying ratings and limitations of use that apply to the products. This information by itself is not sufficient for a complete determination of the suitability of the products in combination with the end product, machine, system, or other application or use. The following are some examples of applications for which particular attention must be given. This is not intended to be an exhaustive list of all possible uses of the products, nor is it intended to imply that the uses listed may be suitable for the products: • Outdoor use, uses involving potential chemical contamination or electrical interference, or conditions or uses not described in this manual. • Nuclear energy control systems, combustion systems, railroad systems, aviation systems, medical equipment, amusement machines, vehicles, safety equipment, and installations subject to separate industry or government regulations. • Systems, machines, and equipment that could present a risk to life or property. Please know and observe all prohibitions of use applicable to the products. NEVER USE THE PRODUCTS FOR AN APPLICATION INVOLVING SERIOUS RISK TO LIFE OR PROPERTY WITHOUT ENSURING THAT THE SYSTEM AS A WHOLE HAS BEEN DESIGNED TO ADDRESS THE RISKS, AND THAT THE OMRON PRODUCTS ARE PROPERLY RATED AND INSTALLED FOR THE INTENDED USE WITHIN THE OVERALL EQUIPMENT OR SYSTEM.

PROGRAMMABLE PRODUCTS
OMRON shall not be responsible for the user's programming of a programmable product, or any consequence thereof.

Disclaimers

CHANGE IN SPECIFICATIONS

Product specifications and accessories may be changed at any time based on improvements and other reasons. It is our practice to change model numbers when published ratings or features are changed, or when significant construction changes are made. However, some specifications of the products may be changed without any notice. When in doubt, special model numbers may be assigned to fix or establish key specifications for your application on your request. Please consult with your OMRON representative at any time to confirm actual specifications of purchased products.

DIMENSIONS AND WEIGHTS

Dimensions and weights are nominal and are not to be used for manufacturing purposes, even when tolerances are shown.

PERFORMANCE DATA

Performance data given in this manual is provided as a guide for the user in determining suitability and does not constitute a warranty. It may represent the result of OMRON's test conditions, and the users must correlate it to actual application requirements. Actual performance is subject to the OMRON Warranty and Limitations of Liability.

ERRORS AND OMISSIONS

The information in this manual has been carefully checked and is believed to be accurate; however, no responsibility is assumed for clerical, typographical, or proofreading errors, or omissions.

Safety Precautions

To ensure that the DeviceNet Communications Unit (Model: 3G3AX-MX2-DRT-E/3G3AX-RX-DRT-E) is used safely and correctly, be sure to read this Safety Precautions section and the main text before using the product.
Learn all items you should know before use, regarding the equipment as well as required safety information and precautions.
Make an arrangement so that this manual also gets to the end user of this product.
After reading this manual, keep it in a convenient place so that it can be referenced at any time.

Definition of Precautionary Information

The following notation is used in this manual to provide precautions required to ensure safe usage of a DeviceNet Communications Unit (Model: 3G3AX-MX2-DRT-E/3G3AX-RX-DRT-E). The safety precautions that are provided are extremely important to safety. Always read and heed the information provided in all safety precautions.
The following notation is used.

Meaning of Warning Indication

⚠ DANGER	Indicates a potentially hazardous situation which, if not avoided, could result in death or serious injury. Additionally, there may be severe property damage.
⚠ Caution	Indicates a potentially hazardous situation which, if not avoided, may result in minor or moderate injury, or property damage.

Explanation of Symbols

	⃠ This symbol indicates a prohibited item (an item you must not do). The specific instruction is indicated using an illustration or text inside or near ⃠ . The symbol shown to the left indicates "disassembly prohibited."
	△ This symbol indicates danger and caution. The specific instruction is indicated using an illustration or text inside or near △ . The symbol shown to the left indicates "beware of electric shock."
	● This symbol indicates a compulsory item (an item that must be done). The specific instruction is indicated using an illustration or text inside or near ● . The symbol shown to the left indicates a "general mandatory item."

⚠ DANGER	
	Do not attempt to remove the terminal block cover or disconnect and reconnect the DeviceNet Communications Unit during power on or within 10 minutes after power off. Doing so may result in severe injury due to electric shock.

⚠ Caution	
	Inverters contain high voltage parts and short-circuits may sometimes cause product damage or property damage. Measures must be taken to prevent chips, lead-wire pieces, or other metal waste from entering the product, for example, by installing a cover.
	Do not attempt to disassemble, repair, or modify the DeviceNet Communications Unit. Doing so may result in injury.

Precautions for Safe Use

Installation and Storage

Do not store or use the DeviceNet Communications Unit in the following environment:

- Locations subject to direct sunlight
- Locations subject to ambient temperatures outside the range specified in the specifications
- Locations subject to relative humidity outside the range specified in the specifications
- Locations subject to condensation as the result of severe temperature fluctuations
- Locations subject to corrosive or flammable gases
- Locations near flammable materials
- Locations subject to dust, salt spray, or iron powder
- Locations subject to water, oil, or chemical splashes
- Locations subject to direct shock or vibration

Transportation, Installation, and Wiring

- Do not drop or apply strong impact on the product. Doing so may result in damaged parts or malfunction.
- When transporting the inverter with a mounted DeviceNet Communications Unit, do not hold the DeviceNet Communications Unit.
- Do not remove the cover of the DeviceNet Communications Unit. Tighten an Unit fixation screw to the specified torque.
- Install an appropriate stopping device to ensure safety. In particular, if configured to operate continuously even in the event of a communications error, the inverter may not stop, resulting in equipment damage.
- If the DeviceNet Communications Unit is used in the following locations, provide sufficient shielding measures. Using the DeviceNet Communications Unit in any of these locations may result in equipment damage.
  Locations subject to static electricity or other forms of noise
  Locations subject to strong electromagnetic fields
  Locations close to power lines
- During installation, wiring, and network setting on the DeviceNet Communications Unit, please refer to applicable sections of this manual to ensure the correct connection and configuration procedures.
- When removing the DeviceNet Communications Unit, do not pull the flat cable.
- When mounting the DeviceNet Communications Unit, be sure that the flat cable is not pinched.
- When mounting the DeviceNet Communications Unit, be careful about burrs of the break-outs on the inverter.

Operation and Adjustment

- Be sure to confirm the permissible range of motors and machines before operation because the speed can be set from low to high.
- Before starting the CPU Unit and inverter programs, check the program contents as well as the interactions between these programs.

Maintenance and Inspection

- Be sure to confirm safety before conducting maintenance, inspection or parts replacement.
- Invalid parameter configuration may result in a communications error, interrupting the communications function of other units. Before participating in the network, make sure that the communications configuration parameters are set properly.
- Using a support tool to write all inverter parameters causes the DeviceNet configuration parameters to be overwritten. Before reconnecting to DeviceNet, make sure that the address and I/O allocations are correct.

Precautions for Correct Use

Installation

Be sure to meet the constraints on the mounting direction of the inverter.

Modbus-RTU Communication

Mounting the DeviceNet Communications Unit disables the inverter's Modbus-RTU communication capability.

Product Disposal

Comply with the local ordinance and regulations when disposing of the product.

Warning Labels

- The product's warning label is located in the following position when the DeviceNet Communications Unit is mounted on the inverter.
- For the model 3G3AX-RX-DRT-E, the warning label is attached to the inverter.
- Be sure to follow the instructions.

Note The appearance differs depending on the capacity of the inverter.

MX2

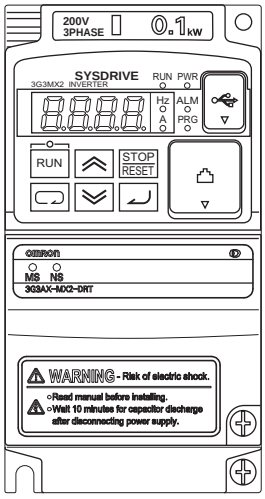

RX

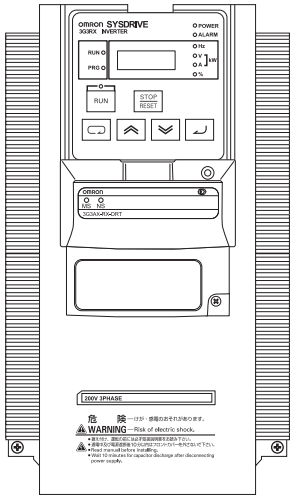

Warning Description

The model 3G3AX-MX2-DRT-E (for the MX2-series) has an English warning label attached when shipped from the factory.

Affix an appropriate language label included with the product on it if necessary.

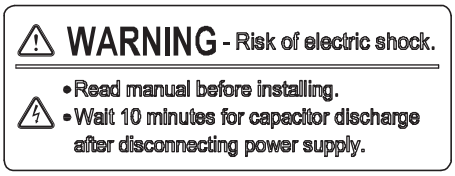

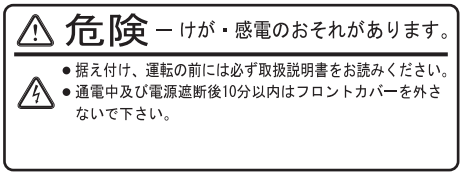

Supported Inverter Versions

There is a restriction on the unit version of the inverter that can be used with the DeviceNet Communications Unit.

MX2 Make sure that your inverter's unit version is 1.1 or later.

RX Make sure that your inverter is 3G3RX-V1 series (unit version 2.0 or later).

Note The inverter unit version is indicated on the nameplate attached to the inverter.

Regulations and Standards

To export (or provide to nonresident aliens) any part of this product that falls under the category of goods (or technologies) for which an export certificate or license is mandatory according to the Foreign Exchange and Foreign Trade Control Law of Japan, an export certificate or license (or service transaction approval) according to this law is required.
Therefore, for the DeviceNet Communications Unit which is an EC-compliant product, it is the user's responsibility to check and ensure the compliance of the equipment and the entire system with the applicable EC Directives.

EC Directives

EC Directives	Applicable Standard
EMC Directive	EN61800-3
Low Voltage Directive	EN61800-5-1

UL and cUL Standards

Standard	Applicable standards
UL/cUL	UL508

Machinery Directive

Mounting the DeviceNet Communications Unit to an inverter will void the certification of the inverter under Machinery Directive.

Trademarks

- DeviceNet is a registered trademark of the Open DeviceNet Vendor Association (ODVA).
- Windows is a registered trademark of Microsoft Corporation in the United States and other countries.
- Other company names and product names in this document are the trademarks or registered trademarks of their respective companies.

Items to Check After Unpacking

On delivery, be sure to check that the delivered product is what you ordered. In case that you find any problems with the product, immediately contact your nearest local sales representative or OMRON sales office.

Checking the Nameplate

The product has a nameplate on its rear face.

Checking the Model

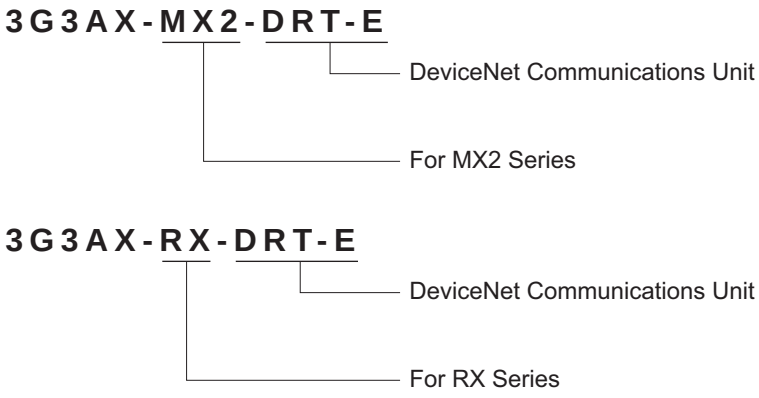

Checking the Accessories

The DeviceNet Communications Unit (Model: 3G3AX-MX2-DRT-E and 3G3AX-RX-DRT-E) comes with the following accessories.

MX2

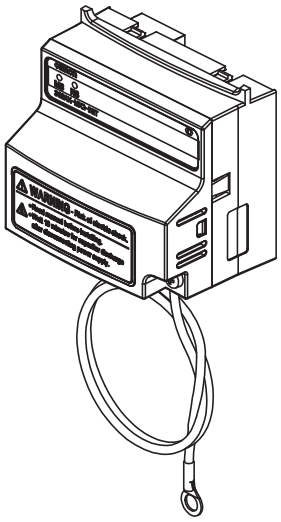

DeviceNet Communications Unit (supplied with a DeviceNet connector)

OMRON

DeviceNet Communications Unit
3G3AX-MX2-DRT-E
(For MX2 Series)

Manual

Thank you for purchasing an OMRON product.
Please check that this is the one you intended and read this manual carefully before use.
Always keep this manual in a safe and handy place.

Catalog Type	Catalog Number
3G3AX-MX2-DRT-E/3G3AX-MX2-DRT-E User's Manual	I581

OMRON Corporation
©OMRON Corporation 2011 All Right Reserved.

Instruction Sheet

Warning Labels

RX

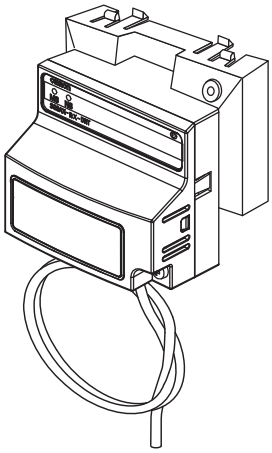

DeviceNet Communications Unit (supplied with a DeviceNet connector)

OMRON

DeviceNet Communications Unit
3G3AX-RX-DRT-E
(For RX Series)

Manual

Thank you for purchasing an OMRON product.
Please check that this is the one you intended and read this manual carefully before use.
Always keep this manual in a safe and handy place.

Catalog Type	Catalog Number
3G3AX-MS2-DRT-E/3G3AX-RX-DRT-E User's Manual	I581

OMRON Corporation
©OMRON Corporation 2011 All Right Reserved.

Instruction Sheet

DeviceNet Communications Unit fixation screw (M3x40)

Related Manuals

To operate this DeviceNet Communications Unit, you must be familiar with the equipment connected to it. Please refer to the following manuals for information on the related products.

Inverter Manuals

Model and Name	Catalog No.
Multi-function Compact Inverter MX2 User's Manual	I570
High-function General-purpose Inverter 3G3RX-□-V1 User's Manual	I578

Note For inverter operation, please refer to the manual for the inverter.

DeviceNet Communications Unit Manuals

Model and Name	Catalog No.
CS/CJ-series DeviceNet Units Operation Manual	W380
DeviceNet Operation Manual	W267

Revision History

The manual revision code is a number appended to the end of the catalog number found in the bottom right-hand corner of the front and back covers.

Example

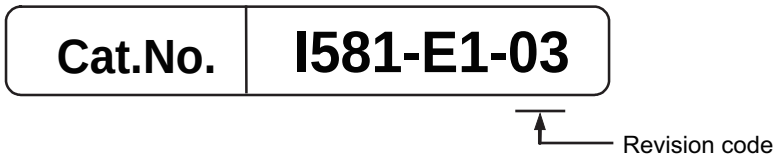

Revision Code	Revision Date	Revised Content
01	January 2012	Original production
02	April 2012	Corrected mistakes.
03	October 2012	Descriptions about 3G3AX-RX-DRT-E were added. The revised parts are marked with **RX**.

1

Outline

This section provides an outline, features, and specifications of the DeviceNet Communications Unit.

1-1 Outline of DeviceNet Communications Unit 1-2

1-2 Outline of DeviceNet Communications 1-5
1-2-1 Functions 1-5
1-2-2 Features 1-5
1-2-3 Configuration 1-7
1-2-4 Maximum Number of Inverter Connections 1-8

1-3 Specifications 1-10

1-4 Restrictions on Use 1-14
1-4-1 Supported Inverters 1-14
1-4-2 Inverter Safety (ISO13849-1) 1-14
1-4-3 Restrictions 1-15

1-5 Comparison with Conventional Models 1-16

1-1 Outline of DeviceNet Communications Unit

The DeviceNet Communications Unit (Model: 3G3AX-MX2-DRT-E) is used in conjunction with a multi-function compact inverter, the MX2-series. On the other hand, the DeviceNet Communications Unit (Model: 3G3A-RX-DRT-E) is intended for high-function general-purpose inverter, the RX-series.

The DeviceNet Communications Unit is an interface unit that realizes data communications between an inverter and a CS/CJ-series Programmable Controller.
By connecting the DeviceNet Communications Unit to your inverter, you can start and stop the inverter, monitor its operation status, and change various settings from a CS/CJ-series to support a wide range of applications.

Precautions for Correct Use

Connecting the DeviceNet Communications Unit disables the RS-422/485 communications function of the inverter.

Communications Functions as if using I/O Function

In DeviceNet Communications with a CS/CJ-series and Inverters, the following two communications functions can be used concurrently.

- **Remote I/O**

  Remote I/O is a function that enables a Slave (Inverter) to exchange I/O data with the CPU Unit that has no program running. For example, you can send inverter control inputs such as run/stop automatically from the CS/CJ-series to your inverter and return the operation status, output frequency monitor, or other data from the inverter to the CS/CJ-series.

- **Messaging**

  Messaging is a function that enables you to use specific instructions such as CMND and IOWR in a program to exchange data between a CPU Unit with the Master Unit and Slaves (Inverters). These specific instructions vary depending on the CS/CJ-series model.
  Unless you configure certain parameters, monitor the output frequency, output voltage, output current, or other parameter data of the inverter, or use Remote I/O communications, you can also use the Messaging function to send inverter control inputs such as run/stop.

The Remote I/O function of the DeviceNet Communications Unit communicates via the I/O area word address 4 to 20 of the CS/CJ-series. Because the Remote I/O function offers the basic control input and output, frequency setting, and output frequency monitor functions, you can control your inverter as if you were handling ordinary I/O control data.

Communications with CS/CJ-series

A DeviceNet communications system can be used in conjunction with a CS/CJ-series programmable controller. You can connect up to 63 Inverters to a DeviceNet communications system and control them.

Precautions for Correct Use

- The maximum number of inverter connections depends on the operating conditions. Refer to *1-2-4 Maximum Number of Inverter Connections* on page 1-8.
- Specifically, "CS/CJ-series" represents the following models of programmable controllers. CS1G/H-CPU□H, CS1G/H-CPU□(-V1), CJ1G/H-CPU□□H, CJ1M-CPU□□, CJ1G-CPU□□, CJ2H-CPU6□(-EIP), CJ2H-CPU□□

Multi-vendor Network

This DeviceNet Communications Unit conforms to the DeviceNet specifications and can be connected to a third party device (Master or Slave).
It also supports the AC/DC drive object defined in the DeviceNet specifications.

Options for Communications Functions

The DeviceNet Communications Unit offers a wide range of communications options that address your inverter application.

● Support for the Master's Communication Method

The DeviceNet Communications Unit supports Poll which is one of the DeviceNet I/O connection methods.

● Remote I/O

The Remote I/O function is available in one of the following eight types. Configure the function that suits your application.

Function Name	Description
Basic Speed I/O	Remote I/O function included as standard in DeviceNet.
Extended Speed I/O	Remote I/O function included as standard in DeviceNet. This is the default of this DeviceNet Communications Unit.
Extended Speed and Acceleration Control	Extended Speed I/O function with an additional acceleration/deceleration time configuration function.
Extended Speed and Torque Control	Extended Speed I/O function with an additional torque control function.
Extended Control I/O	Remote I/O optimized for the actual input/output functions of the inverter. It includes a torque control function.
Extended Control I/O and Multi function I/O Monitor	Extended Control I/O function with an additional Multi-function Input Monitor function. It enables you to use the inverter inputs as general-purpose PLC inputs by configuring an appropriate parameter.
Special I/O	Remote I/O function that provides functions similar to those available in Modbus communication.
Flexible Format	Remote I/O function that allows you to select and allocate up to 10 words of parameter data for input and output.

- **Messaging**

  You can use the Explicit Message function of DeviceNet to control and monitor your inverter. It supports messages that conform to the AC/DC drive object defined in the DeviceNet specifications. In addition, you can use the Parameter Read/Write message object (Class 64), a unique enhancement by OMRON, to read/write the parameter settings and monitor values stored in the inverter. Using the Explicit Message function in conjunction with Remote I/O enables the use of data not allocated to Remote I/O because these function can be used independent of each other.

Support for a Wide Range of System Configurations

The DeviceNet Communications Unit provides two communications functions, Remote I/O and Messaging. You can use the Remote I/O function for control inputs normally and the Messaging function as required to monitor each inverter. These communications functions also allow you to control whether to enable the control inputs from the communications line or the local control inputs.

Precautions for Correct Use

For each inverter's DeviceNet Communications Unit, use a T-branch tap and fine wire communications cables (Model: DCA1-5C10) to provide T-branching.

Automatic Baud Rate Recognition

The DeviceNet Communications Unit automatically detects the Master Unit's communication baud rate, so no user configuration is required.

Precautions for Correct Use

To change the DeviceNet Master Unit's baud rate, be sure to reset the Master Unit first. Then, turn power supply OFF and ON the inverter (DeviceNet Communications Unit) to have the new bard rate detected.

Parameter Edit Using CX-Drive via DeviceNet

Connecting the Inverter/Servo parameter support tool CX-Drive via DeviceNet communications enables editing of inverter parameters. You can change parameters for all Slaves without switching the connection of the software.

Precautions for Correct Use

This DeviceNet Communications Unit is supported in CX-Drive Ver.2.6 or higher.

1-2 Outline of DeviceNet Communications

1-2-1 Functions

DeviceNet is a multi-vendor network optimized for multi-bit communications systems such as machine- and line-control systems, where control data and other information are mixed. DeviceNet is one of the network families that implements the Common Industrial Protocol (CIP) at its upper layer.
DeviceNet communications are broadly divided into the following two types.

Communications Function	Description
Remote I/O communications	Enable automatic data exchange between a PLC (Master Unit/CPU Unit) and Slave Units in a cyclic manner.
Explicit Message communications	Enable low-priority communications where messages are sent from a PLC to Slave Units. It enables you to read/write parameters, read the operation status, or perform other operations.

1-2-2 Features

Multi-vendor Network

This DeviceNet Communications Unit conforms to the DeviceNet specifications and can be connected to a third party device (Master or Slave). When used in conjunction with DeviceNet-compliant products including valves and various sensors, it can support a wide range of field-level applications.

Concurrent Execution of Remote I/O and Messaging Services

The DeviceNet Communications Unit supports concurrent execution of the Remote I/O function that enables constant data exchange between a CS/CJ-series unit and Slaves and the Message communications function that enables sending/receiving of data from a CS/CJ-series unit as needed. Therefore, by using a DeviceNet network, you can flexibly support applications that require sending/receiving of bit information and data (a message). Note that, Message communications provide the function of issuing DeviceNet Explicit Messages, in addition to OMRON FINS commands.

Connection of Multiple CS/CJ-series Units on a Single Network

With the network configuration tool CX-Integrator (sold separately), you can connect two or more Master Units on a single network to establish Messaging communications between CS/CJ-series units and Remote I/O communications between a CS/CJ-series unit and Slaves in two or more groups. This enables integration of various control devices with reduced wire connections using DeviceNet as a kind of a common bus.

Multi-layer Network to Support Multi-point Control and Line Expansion

With the network configuration tool CX-Integrator (sold separately), you can mount two or more Master Units on a single CS/CJ-series unit to provide multi-point Remote I/O control. Furthermore, you can easily address line expansion or other needs.

Flexible Remote I/O Allocation

With the network configuration tool CX-Integrator (sold separately), you can configure Remote I/O allocations flexibly in any areas in any order of node addresses. This enables area allocation depending on your application to facilitate programming, resulting in efficient area utilization in the CS/CJ-series unit.

Support of Slaves with Various Response Speeds

With the network configuration tool CX-Integrator (sold separately), you can configure the communications cycle time to support Slaves with slow response speeds.

Wide Variety of Connection Options for Flexible Line Expansion/Changes

In addition to multi-drop connections, the DeviceNet Communications Unit supports multi-branching of up to three branches and branching lines. These connection options can be combined according to your floor configuration, enabling the construction of a highly flexible system.

Precautions for Correct Use

For each Inverter's DeviceNet Communications Unit, use a T-branch tap and fine wire communications cables (Model: DCA1-5C10) to provide T-branching.

1-2-3 Configuration

Configuration (Example)

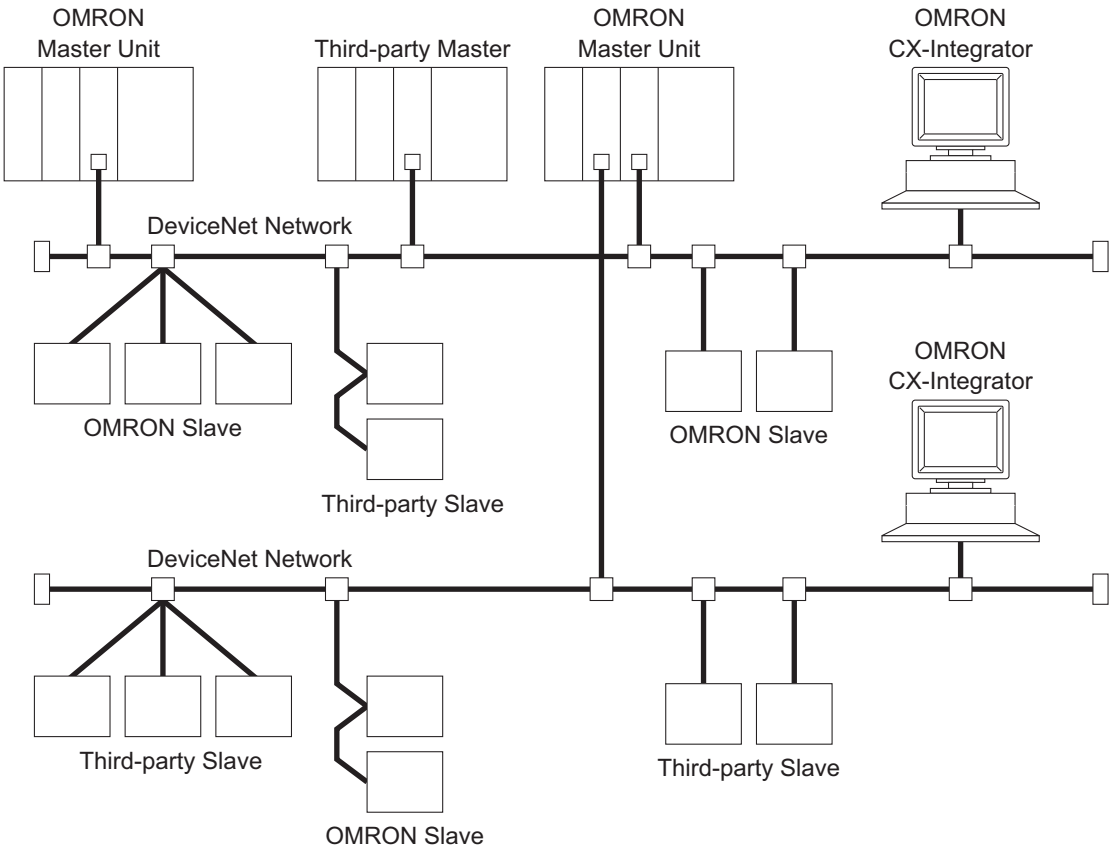

DeviceNet Slave

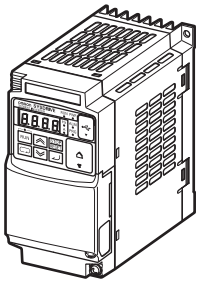

MX2 Series

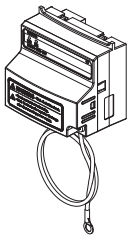

DeviceNet Communications Unit
(Model: 3G3AX-MX2-DRT-E)

DeviceNet Slave

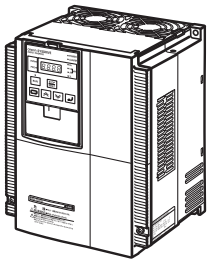

RX-V1 Series

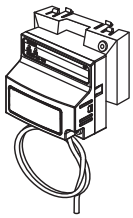

DeviceNet Communications Unit
(Model: 3G3AX-RX-DRT-E)

1-2-4 Maximum Number of Inverter Connections

The maximum number of inverters you can connect depends on the following factors.

- Type of the CS/CJ-series Master Unit connected
- Type of the inverter's Remote I/O function
- Type of Remote I/O allocations

Refer to the following tables for details.

When the Master Unit is CS1W-DRM21 (-V1) or CJ1W-DRM21

● Not Using CX-Integrator (Remote I/O fixed allocation)

Item	CS-series	CJ-series
Master Unit model	CS1W-DRM21 (-V1)	CJ1W-DRM21
Supported communications	Remote I/O, Messaging	
Maximum number of slaves per Master	63 nodes	
Maximum number of control points per Master	2048 points	
Allocation areas	Select one of the following ranges of areas.*1 1: OUT: CIO 3200 to CIO 3263/IN: CIO 3300 to CIO 3363 (Default) 2: OUT: CIO 3400 to CIO 3463/IN: CIO 3500 to CIO 3563 3: OUT: CIO 3600 to CIO 3663/IN: CIO 3700 to CIO 3763	
Allocation type	Slaves are allocated to the above areas in a fixed order of node addresses. • 8-point slaves: Occupies 1 word (1 node address) • 16-point slaves: Occupies 1 word (1 node address) • Slaves with more than 16 points: Occupies more than 1 word (more than 1 node address)	
Maximum number of inverter connections	32 (when Remote I/O occupies 4 words) 21 (when Remote I/O occupies 6 words) 16 (when Remote I/O occupies 8 words) ... 6 (when Remote I/O occupies 20 words)	

*1 Select with the soft switch (fixed area setting 1/2/3 switch) in the Master Unit allocation relay area.

● Using allocation DM areas or CX-Integrator (User allocations)

Item	CS-series	CJ-series
Master Unit model	CS1W-DRM21 (-V1)	CJ1W-DRM21
Supported communications	Remote I/O, Messaging	
Maximum number of slaves per Master	63 nodes	
Maximum number of control points per Master	Using allocation DM areas: 16000 points (IN 500 words x 1 block, OUT 500 words x 1 block) Using CX-Integrator: 32000 points (IN 500 words x 2 block, OUT 500 words x 2 block)	
Allocation areas	CIO: CIO 0000 to CIO 6143 WR: W000 to W511 HR: HR000 to HR511 DM: D00000 to D32767 EM: E00000 to E32767	
Allocation type	Slaves can be allocated freely node by node to the above areas using CX-Integrator. However, the following restrictions apply. ■ **Using allocation DM areas** If you use the allocation DM areas of the Master Unit to perform user allocations, the following restrictions apply. • An allocation area must consist of two contiguous blocks of words, OUT1 and IN1. • In an allocated area, words of each slave must be allocated in order of node addresses. However, unused node addresses need not be allocated. • 8-point slaves cannot be allocated to the high byte. ■ **Using CX-Integrator** If you use CX-Integrator, more flexible allocation than using allocation DM areas is possible, with less restrictions as follows. • An allocation area must consist of four contiguous blocks of words, OUT1, OUT2, IN1, and IN2. • In an allocated area, words of each slave can be allocated flexibly in any order, regardless of node addresses. ■ **Restrictions commonly applied to both allocation types** The following restrictions apply commonly to both types of allocation, using allocation DM areas and using CX-Integrator. • A block must consist of 500 words or less. • For slaves with more than 8 points, the starting byte cannot be set to the high byte (7 to 15). • The same Slave cannot be shared by more than 1 Master Unit. Each type of Slave occupies words as follows. • 8-point slaves: Occupies the high or low byte of 1 word. • 16-point slaves: Occupies 1 word. • Slaves with more than 16 points: Occupies more than 1 word. For Slaves with an odd number of contacts, the last Slave occupies only the low byte.	
Maximum number of inverter connections for a single Master Unit	63	
Maximum number of inverter connections for multiple Master Units	Calculate based on the number of words in the above allocation area and the number of words occupied by the Inverters (4 to 8 words).*1	

*1 Bit operation cannot be performed in the DM (Data Memory) area. In other words, this area is not appropriate for the Remote I/O allocation area for an inverter because it cannot be used as a contact.

1-3 Specifications

● DeviceNet Communications Unit

Item		Specification
Installation	Unit type	MX2-series DeviceNet Communications Unit
MX2	Model	3G3AX-MX2-DRT-E
	Dimensions (W x H x D)	68 x 60 x 45 mm
	Weight	100 g or less (Shipping weight: Approx. 170 g)
Installation	Unit type	RX-series DeviceNet Communications Unit
RX	Model	3G3AX-RX-DRT-E
	Dimensions (W x H x D)	80 x 67 x 49 mm
	Weight	100 g or less (Shipping weight: Approx. 170 g)
Environment	Ambient operating temperature	-10 to 50°C
	Ambient operating humidity	20 to 90%RH (no condensation)
	Ambient storage temperature	-20 to 65°C
	Vibration resistance	5.9 m/s^2 (0.6G) at 10 to 55 Hz
	Dielectric strength	500 VAC (between isolated circuits)
	Location of use	1,000 m above sea level, indoor (No corrosive gas or dust)
	EC Directives	EN61800-3: 2004 (2004/108/EC) Second environment, Category C3
		EN61800-5-1: 2007 (2006/95/EC) SELV
	UL/cUL standards	UL508
	Enclosure rating	IP 20
DeviceNet Interface	Communications protocol	DeviceNet
	Certification	DeviceNet Conformance Test
	DeviceNet profile	AC Drive (0x02)
	Supported connections	Remote I/O: Master-Slave connection Poll Bitstrobe Change of state Cyclic Expricit Message Conform to the DeviceNet specifications
	Communications power supply	11 to 25 VDC (max. 50 mA, typ. 20 mA)
	Unit device address range	Node address MAC ID 0 to 63, set with inverter parameter P192
	Supported baud rates	125, 250, or 500 kbps Automatically detects baud rate of Master Unit.
DeviceNet Configuration	Default connection path	Supported, set with inverter parameter P046
	Supported assemblies	Basic Speed I/O (Output assembly 20, Input assembly 70) Extended Speed I/O (21, 71) Extended Speed and Torque Control (123, 173) Special I/O (100, 150) Extended Control I/O (101, 151) Extended Control I/O and Multi-function Input Monitor (101, 153) Flexible Format (139, 159) Extended Speed and Acceleration Control (110, 111) In case the DeviceNet Master Unit is configured using user allocation, only the input/output pairs can be configured.
	EDS file	Depends on the inverter model. (See the next page.)

The required EDS file for the DeviceNet Communications Unit depends on the model of the MX2/RX-series Inverter.

● MX2-series Device List

Inverter Model	Product Name	ID Code	Name of EDS File
3G3MX2-AB001 3G3MX2-A2001	3G3AX-MX2-DRT-AB001_A2001	1920	3G3AX-MX2-DRT-AB001_A2001.eds
3G3MX2-AB002 3G3MX2-A2002	3G3AX-MX2-DRT-AB002_A2002	1921	3G3AX-MX2-DRT-AB002_A2002.eds
3G3MX2-AB004 3G3MX2-A2004	3G3AX-MX2-DRT-AB004_A2004	1922	3G3AX-MX2-DRT-AB004_A2004.eds
3G3MX2-AB007 3G3MX2-A2007	3G3AX-MX2-DRT-AB007_A2007	1924	3G3AX-MX2-DRT-AB007_A2007.eds
3G3MX2-AB015 3G3MX2-A2015	3G3AX-MX2-DRT-AB015_A2015	1926	3G3AX-MX2-DRT-AB015_A2015.eds
3G3MX2-AB022 3G3MX2-A2022	3G3AX-MX2-DRT-AB022_A2022	1927	3G3AX-MX2-DRT-AB022_A2022.eds
3G3MX2-A2037	3G3AX-MX2-DRT-A2037	1929	3G3AX-MX2-DRT-A2037.eds
3G3MX2-A2055	3G3AX-MX2-DRT-A2055	1931	3G3AX-MX2-DRT-A2055.eds
3G3MX2-A2075	3G3AX-MX2-DRT-A2075	1932	3G3AX-MX2-DRT-A2075.eds
3G3MX2-A2110	3G3AX-MX2-DRT-A2110	1933	3G3AX-MX2-DRT-A2110.eds
3G3MX2-A2150	3G3AX-MX2-DRT-A2150	1934	3G3AX-MX2-DRT-A2150.eds
3G3MX2-A4004	3G3AX-MX2-DRT-A4004	1942	3G3AX-MX2-DRT-A4004.eds
3G3MX2-A4007	3G3AX-MX2-DRT-A4007	1944	3G3AX-MX2-DRT-A4007.eds
3G3MX2-A4015	3G3AX-MX2-DRT-A4015	1946	3G3AX-MX2-DRT-A4015.eds
3G3MX2-A4022	3G3AX-MX2-DRT-A4022	1947	3G3AX-MX2-DRT-A4022.eds
3G3MX2-A4030	3G3AX-MX2-DRT-A4030	1948	3G3AX-MX2-DRT-A4030.eds
3G3MX2-A4040	3G3AX-MX2-DRT-A4040	1950	3G3AX-MX2-DRT-A4040.eds
3G3MX2-A4055	3G3AX-MX2-DRT-A4055	1951	3G3AX-MX2-DRT-A4055.eds
3G3MX2-A4075	3G3AX-MX2-DRT-A4075	1952	3G3AX-MX2-DRT-A4075.eds
3G3MX2-A4110	3G3AX-MX2-DRT-A4110	1953	3G3AX-MX2-DRT-A4110.eds
3G3MX2-A4150	3G3AX-MX2-DRT-A4150	1954	3G3AX-MX2-DRT-A4150.eds

● RX-series Device List

Inverter Model	Product Name	ID Code	Name of EDS File
3G3RX-A2004	3G3AX-RX-DRT-A2004-V1	2203	3G3AX-RX-DRT-A2004-V1.eds
3G3RX-A2007	3G3AX-RX-DRT-A2007-V1	2204	3G3AX-RX-DRT-A2007-V1.eds
3G3RX-A2015	3G3AX-RX-DRT-A2015-V1	2205	3G3AX-RX-DRT-A2015-V1.eds
3G3RX-A2022	3G3AX-RX-DRT-A2022-V1	2206	3G3AX-RX-DRT-A2022-V1.eds
3G3RX-A2037	3G3AX-RX-DRT-A2037-V1	2207	3G3AX-RX-DRT-A2037-V1.eds
3G3RX-A2055	3G3AX-RX-DRT-A2055-V1	2208	3G3AX-RX-DRT-A2055-V1.eds
3G3RX-A2075	3G3AX-RX-DRT-A2075-V1	2209	3G3AX-RX-DRT-A2075-V1.eds
3G3RX-A2110	3G3AX-RX-DRT-A2110-V1	2210	3G3AX-RX-DRT-A2110-V1.eds
3G3RX-A2150	3G3AX-RX-DRT-A2150-V1	2211	3G3AX-RX-DRT-A2150-V1.eds
3G3RX-A2185	3G3AX-RX-DRT-A2185-V1	2212	3G3AX-RX-DRT-A2185-V1.eds
3G3RX-A2220	3G3AX-RX-DRT-A2220-V1	2213	3G3AX-RX-DRT-A2220-V1.eds
3G3RX-A2300	3G3AX-RX-DRT-A2300-V1	2214	3G3AX-RX-DRT-A2300-V1.eds
3G3RX-A2370	3G3AX-RX-DRT-A2370-V1	2215	3G3AX-RX-DRT-A2370-V1.eds
3G3RX-A2450	3G3AX-RX-DRT-A2450-V1	2216	3G3AX-RX-DRT-A2450-V1.eds
3G3RX-A2550	3G3AX-RX-DRT-A2550-V1	2217	3G3AX-RX-DRT-A2550-V1.eds

Inverter Model	Product Name	ID Code	Name of EDS File
3G3RX-A4004	3G3AX-RX-DRT-A4004-V1	2230	3G3AX-RX-DRT-A4004-V1.eds
3G3RX-A4007	3G3AX-RX-DRT-A4007-V1	2231	3G3AX-RX-DRT-A4007-V1.eds
3G3RX-A4015	3G3AX-RX-DRT-A4015-V1	2232	3G3AX-RX-DRT-A4015-V1.eds
3G3RX-A4022	3G3AX-RX-DRT-A4022-V1	2233	3G3AX-RX-DRT-A4022-V1.eds
3G3RX-A4037	3G3AX-RX-DRT-A4037-V1	2234	3G3AX-RX-DRT-A4037-V1.eds
3G3RX-A4055	3G3AX-RX-DRT-A4055-V1	2235	3G3AX-RX-DRT-A4055-V1.eds
3G3RX-A4075	3G3AX-RX-DRT-A4075-V1	2236	3G3AX-RX-DRT-A4075-V1.eds
3G3RX-A4110	3G3AX-RX-DRT-A4110-V1	2237	3G3AX-RX-DRT-A4110-V1.eds
3G3RX-A4150	3G3AX-RX-DRT-A4150-V1	2238	3G3AX-RX-DRT-A4150-V1.eds
3G3RX-A4185	3G3AX-RX-DRT-A4185-V1	2239	3G3AX-RX-DRT-A4185-V1.eds
3G3RX-A4220	3G3AX-RX-DRT-A4220-V1	2240	3G3AX-RX-DRT-A4220-V1.eds
3G3RX-A4300	3G3AX-RX-DRT-A4300-V1	2241	3G3AX-RX-DRT-A4300-V1.eds
3G3RX-A4370	3G3AX-RX-DRT-A4370-V1	2242	3G3AX-RX-DRT-A4370-V1.eds
3G3RX-A4450	3G3AX-RX-DRT-A4450-V1	2243	3G3AX-RX-DRT-A4450-V1.eds
3G3RX-A4550	3G3AX-RX-DRT-A4550-V1	2244	3G3AX-RX-DRT-A4550-V1.eds
3G3RX-B4750	3G3AX-RX-DRT-B4750-V1	2245	3G3AX-RX-DRT-B4750-V1.eds
3G3RX-B4900	3G3AX-RX-DRT-B4900-V1	2246	3G3AX-RX-DRT-B4900-V1.eds
3G3RX-B411K	3G3AX-RX-DRT-B411K-V1	2247	3G3AX-RX-DRT-B411K-V1.eds
3G3RX-B413K	3G3AX-RX-DRT-B413K-V1	2248	3G3AX-RX-DRT-B413K-V1.eds

Dimensions of the DeviceNet Communications Unit

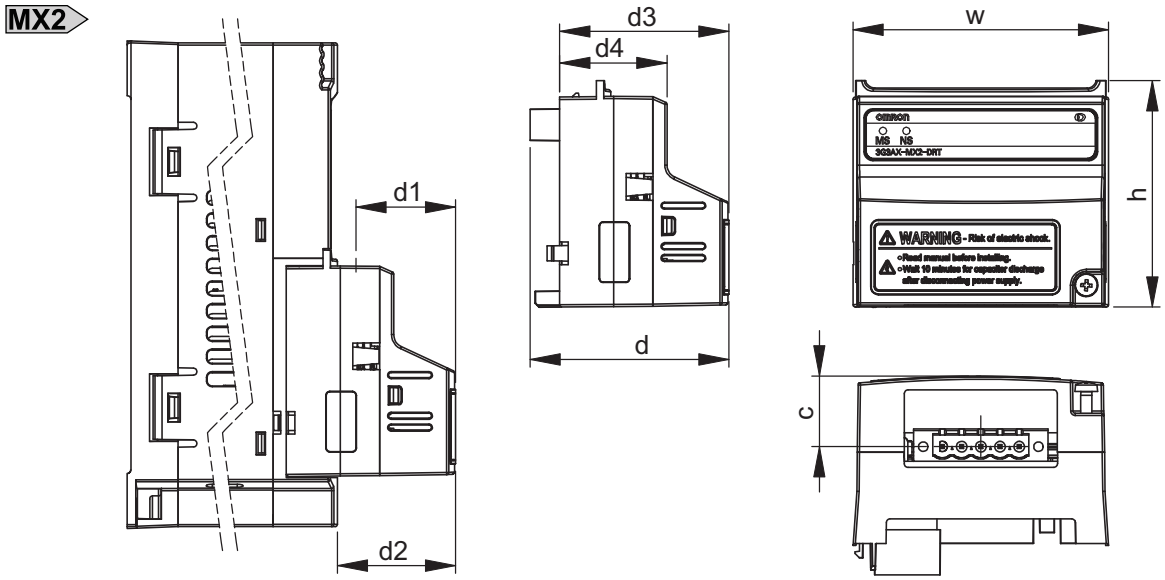

● Dimensions of DeviceNet Communications Unit (when Mounted on MX2-series Inverter)

Item	Dimension
h	60.0 mm
w	67.6 mm

Item	Dimension
c	18.7 mm
d	52.6 mm
d1*1	26.4 mm

Item	Dimension
d2	31.3 mm
d3	44.8 mm
d4	28.4 mm

*1 Dimension d1 gives the increase in the depth of the MX2-series Inverter when the DeviceNet Communications Unit is mounted.

RX

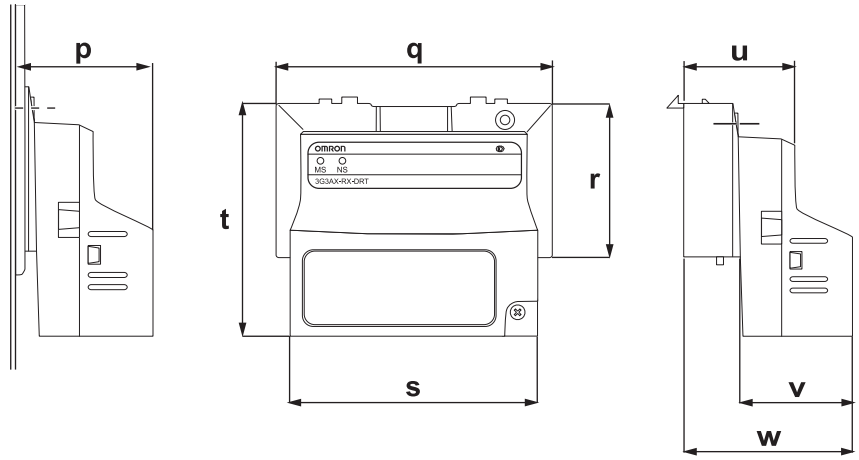

● Dimensions of DeviceNet Communications Unit (when Mounted on RX-series Inverter)

Item	Dimension
p*1	35.1 mm
q	79.8 mm

Item	Dimension
r	43.9 mm
s	66.5 mm
t	66.1 mm

Item	Dimension
u	31.7 mm
v	32.7 mm
w	48.1 mm

*1 Dimension p gives the increase in the depth of the RX-series Inverter when the DeviceNet Communications Unit is mounted.

1-4 Restrictions on Use

1-4-1 Supported Inverters

MX2 The DeviceNet Communications Unit (Model: 3G3AX-MX2-DRT-E) supports the MX2-series Inverters with Ver. 1.1 or later. The MX2-series inverter version can be identified by the inverter type label. Please check that your inverter type label indicates Ver.1.1 or later in the position displayed in this illustration.

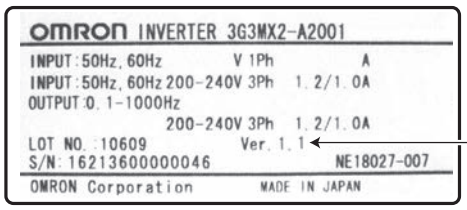

RX The DeviceNet Communications Unit (Model: 3G3AX-RX-DRT-E) supports the RX-series Inverters with Ver.2.0 or later. The RX-series Inverter version can be identified by the inverter type label. Please check that your inverter type label indicates Ver.2.0 or later version number in the position displayed in this illustration.

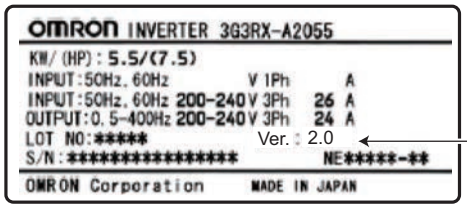

1-4-2 Inverter Safety (ISO13849-1)

The MX2-series Inverters provide a safety function to perform a safe stop according to EN60204, stop category 0. Note that the Inverters are not covered by this safety standard when connected to a DeviceNet Communications Unit.

Precautions for Safe Use

The built-in safety function of the MX2-series inverter does not meet (accurately, is not certified by any third-party body regarding) the safety standard ISO13849-1 when combined with this option unit.

Precautions for Correct Use

The 3G3AX-MX2-DRT-E is not a safety device and does not implement any safety protocols.

1-4-3 Restrictions

Restriction on Inverter Control Mode

The following modes are disabled when the DeviceNet Communications Unit is used with an inverter.

- PM Motor mode
- High Frequency mode

Restrictions on RS485 Communications and MX2-series Unit's RJ45 Connector

When the DeviceNet Communications Unit is used, MX2/RX-series RS485 communications (Modbus) port is disabled.
In addition, when the MX2-series is used with an inverter, the external Digital Operator is disabled with RJ45 connector function.

Restrictions on Inverter Light Load Mode

The MX2/RX-series Inverter can be set to the Heavy Load or Light Load mode.
Switching from the default Heavy Load mode to the Light Load mode disables the vector control, torque control, and other functions.
As a result, in the Light Load mode, the following restrictions arise.

- The Light Load mode disallows writing of the torque reference, configuring a Remote I/O allocation that includes torque reference data results in an error.
- In CX-Integrator, download of parameters using the EDS file fails. Because the Light Load mode disallows writing of some parameter data, you cannot use the EDS file to download parameters. If you execute a download, an error will occur when a write-prohibit parameter is encountered, causing the process to be terminated.

Precautions for Correct Use

To edit parameters via network, use the Inverter/Servo support software CX-Drive to establish connection via an OMRON PLC and DeviceNet.

Restrictions on Editing Device Parameters

If you use CX-Integrator to edit device parameters with an EDS file, you cannot edit the second and third control parameters of the inverter.

Precautions for Correct Use

To edit parameters via network, use the Inverter/Servo support software CX-Drive to establish connection via an OMRON PLC and DeviceNet.

1-5 Comparison with Conventional Models

Category	Function		This Unit 3G3AX-MX2-DRT-E	This Unit 3G3AX-RX-DRT-E	Conventional Units	
					□-PDRT2	□-PDRT1-SIN
Remote I/O	Basic Speed I/O		√	√	√	√
	Extended Speed I/O		√	√	√	√
	Extended Speed and Acceleration Control		√	√	–	–
	Extended Speed and Torque Control		√	√	–	–
	Advanced Remote I/O		–	–	–	√
	Special I/O		√	√	–	–
	Extended Control I/O		√	√	√	√
	Unit Status		–	–	√	–
	Extended Control I/O and Multi function I/O Monitor		√	√	√	–
	Flexible Format		√	√	–	–
DeviceNet Master Support	Connection Support	Poll	√	√	√	√
	Switching of Connection Path (Selection of I/O allocation with inverter parameter)		√*1	√*1	√	√
	Switching to Default Connection Path (Selection of I/O allocation immediately after power-on on Slave)		√	√	√	√
	Automatic Baud Rate (Communications Speed) Recognition		√	√	√	–
Inverter	Parameter Configuration		√	√	√	√
Smart Slave Function	Average Power Monitor		–	–	√	–
	Warning Torque Detection		–	–	√	–
	Current Tracing		–	–	√	–
	Operation Time Monitoring		–	–	√	–
	Accumulated Operating Time Monitoring		–	–	√	–
	Contact Operation Count Monitoring		–	–	√	–
	Power-ON Time Monitoring		–	–	√	–
	Network Power Supply Voltage Monitoring		–	–	√	–
	Unit Comment		–	–	√	–
	Connection Device Comment		–	–	√	–
	Communications Error Log Monitoring		–	–	√	–
	Last Maintenance Date (Maintenance function)		–	–	√	–

*1 Switch using inverter parameter P046 for Remote I/O devices. After changes, cycle the power supply.

2

DeviceNet Communications Unit Mounting and Wiring

This section provides the part names of the DeviceNet Communications Unit and mounting/wiring methods.

2-1 Name and Setting of Each Component 2-2
2-1-1 Name and Setting of Each Component 2-2
2-1-2 LED Indicators 2-4
2-1-3 Node Address Setting 2-4

2-2 Installation 2-5
2-2-1 Mounting Procedure of DeviceNet Communications Unit on MX2-series Inverter 2-6
2-2-2 Mounting Procedure of DeviceNet Communications Unit on RX-series Inverter 2-9
2-2-3 Operating Environment 2-14
2-2-4 Connector Wiring 2-14

2-1 Name and Setting of Each Component

2-1-1 Name and Setting of Each Component

MX2

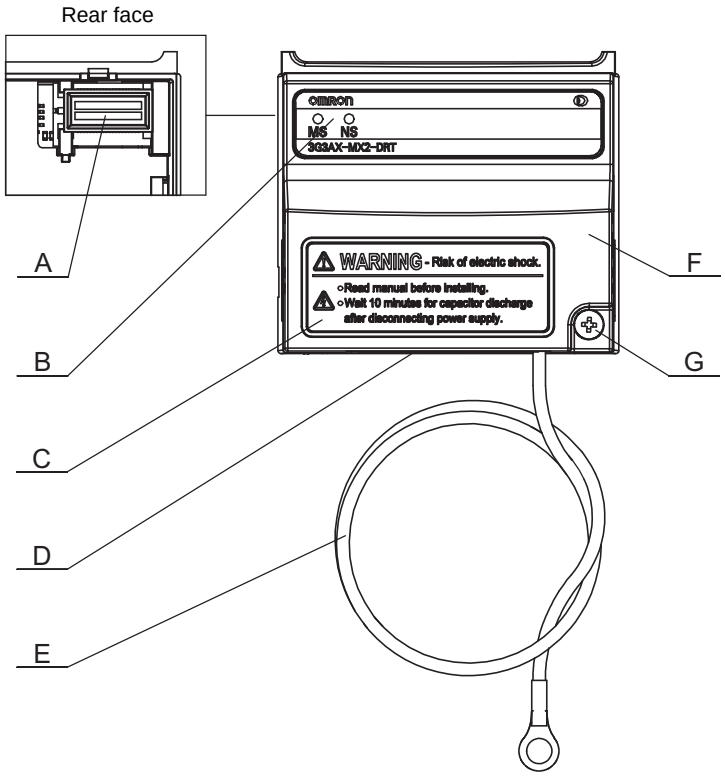

A - Inverter connector
B - LED indicators (MS, NS)
C - Warning label
D - DeviceNet connector
E - Grounding cable
F - Housing
G - Mounting screw

- The LED indicators (B) allow easy diagnosis.
- An attached grounding cable (E) is sized to reach the ground terminals on all MX2-series models.
- The DeviceNet connector is located on the bottom of the DeviceNet Communications Unit.
- The inverter connector (A) must be properly connected with the inverter's connector.

RX

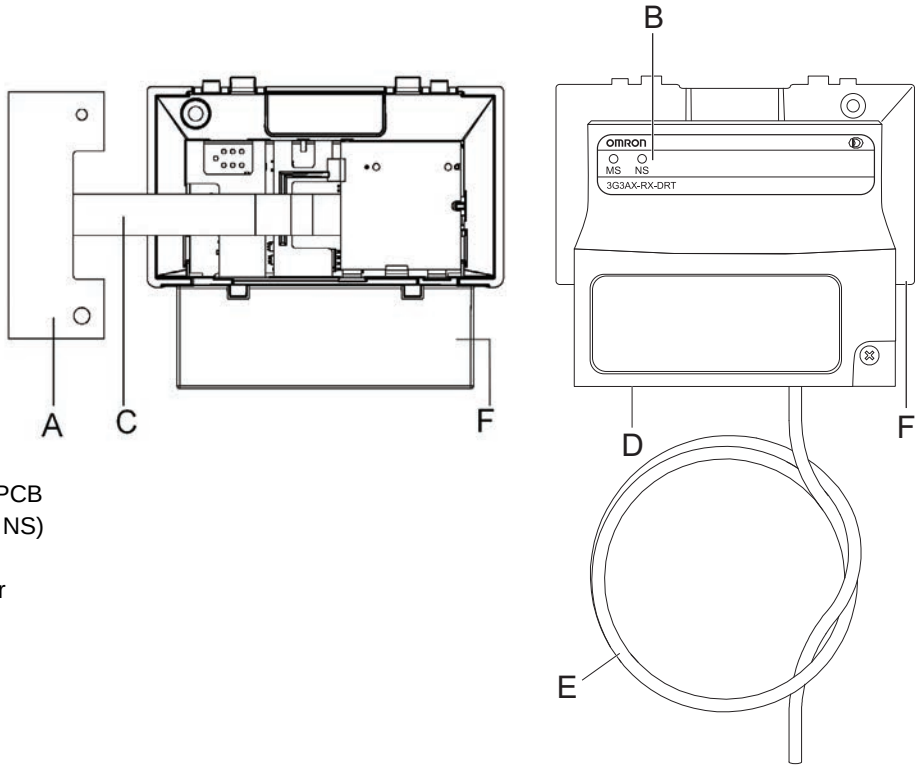

A - Inverter connection PCB
B - LED indicators (MS, NS)
C - Flat cable
D - DeviceNet connector
E - Grounding cable
F - Housing

- Before use, cut the FG cable into an appropriate length for the distance to the Inverter's ground terminal and the size of terminal block, and crimp the crimp terminal.
- For the position of ground terminal and the size of terminal block, refer to Arrangement of Main Circuit Terminal Block and External Dimensions in the user's manual for MX2 or RX-V1 Inverters.

2-1-2 LED Indicators

The LED indicators on the front face indicate the operational mode and status of the DeviceNet Communications Unit and the network.

● LED Indicators

Indicator	Color	Status	Meaning
MS (Module status)	Green	Lit	Normal operation
	Red	Lit	Unrecoverable fault • DeviceNet Communications Unit hardware error • Unsupported inverter version
		Flashing	Recoverable fault • Network power supply is OFF. • Node address was changed. • Illegal Flexible Format configuration • DeviceNet Communications Unit parameters are out of range or cannot be read. • DeviceNet Communications Unit detected consecutive communication errors.
	–	Not lit	• Power is not supplied to DeviceNet Communications Unit. • DeviceNet Communications Unit is not properly connected with inverter. • DeviceNet Communications Unit is reset.
NS (Network status)	Green	Lit	Network is operating normally (communications established).
		Flashing	Network is operating normally, but communications have not been established.
	Red	Lit	DeviceNet Communications Unit detects that network communications are disabled due to some communications error: • Node address duplication • Bus–off error
		Flashing	DeviceNet Communications Unit detected a communications timeout error.
	–	Not lit	• Power is not supplied to DeviceNet Communications Unit. (Check Module Status LED.) • Network power supply is OFF or DeviceNet connector is unplugged. • Checking for node address duplication (intermediate state)

Additional Information

Refer to *Section 6 Troubleshooting* on page 6-1 for troubleshooting using LED indicators.

2-1-3 Node Address Setting

The DeviceNet node address can be set using the following DeviceNet Communications Unit parameter, instead of the conventional method of using rotary switches.
Set the DeviceNet node address using inverter parameter P192.

Parameter	Description	Setting
P192	DeviceNet Node Address	0 to 63 (Default: 63)

2-2 Installation

⚠ DANGER

Do not attempt to remove the terminal block cover or disconnect and reconnect the DeviceNet Communications Unit during power on or within 10 minutes after power off.
Doing so may result in severe injury due to electric shock.

⚠ Caution

Inverters contain high voltage parts and short-circuits may sometimes cause product damage or property damage. Measures must be taken to prevent chips, lead-wire pieces, or other metal waste from entering the product, for example, by installing a cover.

Do not attempt to disassemble, repair, or modify the DeviceNet Communications Unit.
Doing so may result in injury.

Installation and Storage

Do not store or use the DeviceNet Communications Unit in the following environment:

- Locations subject to direct sunlight
- Locations subject to ambient temperatures outside the range specified in the specifications
- Locations subject to relative humidity outside the range specified in the specifications
- Locations subject to condensation as the result of severe temperature fluctuations
- Locations subject to corrosive or flammable gases
- Locations near flammable materials
- Locations subject to dust, salt spray, or iron powder
- Locations subject to water, oil, or chemical splashes
- Locations subject to direct shock or vibration

Transportation, Installation, and Wiring

- Do not drop or apply strong impact on the product. Doing so may result in damaged parts or malfunction.
- When transporting the inverter with a mounted DeviceNet Communications Unit, do not hold the DeviceNet Communications Unit.
- Do not remove the cover of the DeviceNet Communications Unit. Tighten all unit fixation screws to the specified torque.
- Install an appropriate stopping device to ensure safety. In particular, if configured to operate continuously even in the event of a communications error, the inverter may not stop, resulting in equipment damage.

- If the DeviceNet Communications Unit is used in the following locations, sufficient isolation measures must be provided to prevent equipment damage.
  Locations subject to static electricity or other forms of noise
  Locations subject to strong electromagnetic fields
  Locations close to power lines
- During installation, wiring, and network setting on the DeviceNet Communications Unit, please refer to applicable sections of this manual to ensure the correct connection and configuration procedures.
- When removing the DeviceNet Communications Unit, do not pull the flat cable.
- When mounting the DeviceNet Communications Unit, be sure that the flat cable is not pinched.
- When mounting the DeviceNet Communications Unit, be careful about burrs of the break-outs on the inverter.

2-2-1 Mounting Procedure of DeviceNet Communications Unit on MX2-series Inverter

1 **Loosen the screw of the option cover.**
Remove the cover.

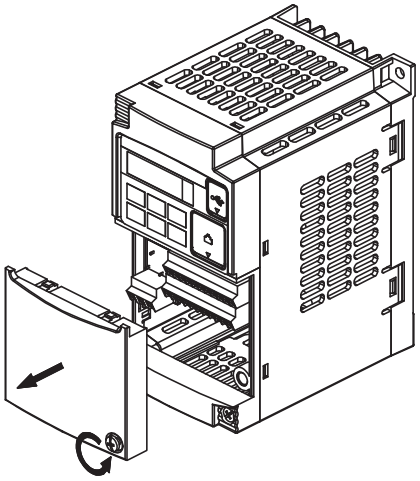

2 **For Inverters up to 4.0 kW only: Loosen the screws of the terminal block cover.**
This is for the ground terminal wiring.

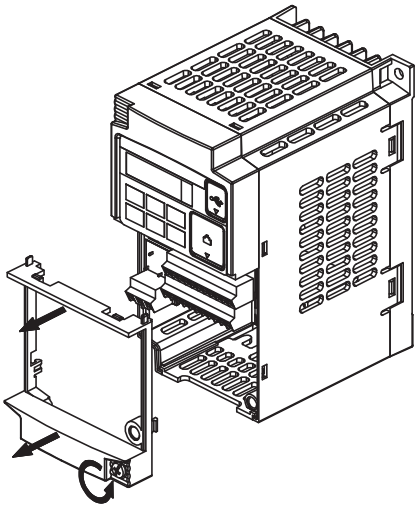

3 **Connect the DeviceNet Communications Unit's grounding cable to inverter with a mounting screw.**

1-phase 200 V 0.1 to 2.2 kW
3-phase 200 V 0.1 to 3.7 kW
3-phase 400 V 0.4 to 4.0 kW

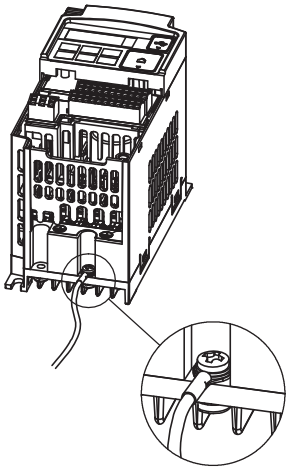

3-phase 200 V 5.5 to 15 kW
3-phase 400 V 5.5 to 15 kW

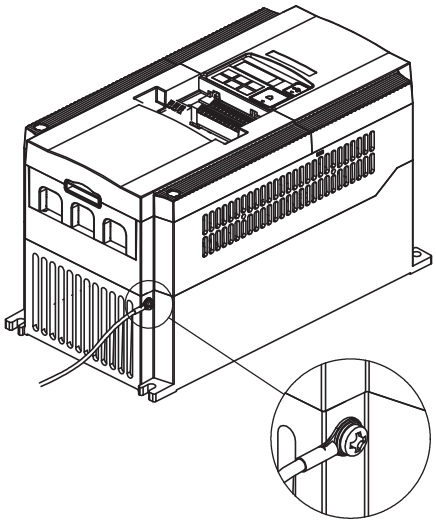

4 **If removed in Step 2, reinstall the terminal cover and tighten the screw.**

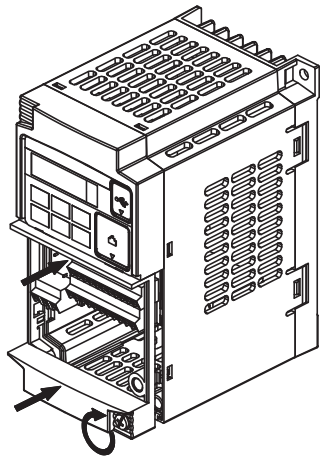

5 **Push the DeviceNet Communications Unit into the previous location of the DeviceNet Communications Unit cover until it clicks into place.**

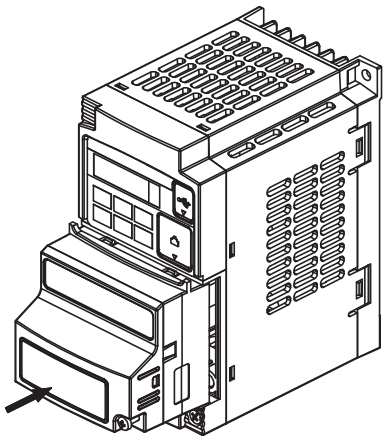

6 **Press down on the indicated corner of the DeviceNet Communications Unit housing to ensure proper connection of the DeviceNet Communications Unit connector.**

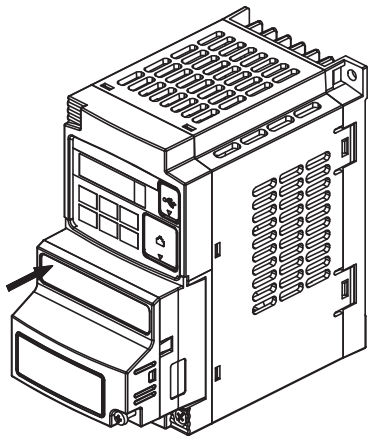

7 **Check that there is no gap between the top edges of the DeviceNet Communications Unit and the inverter casing.**

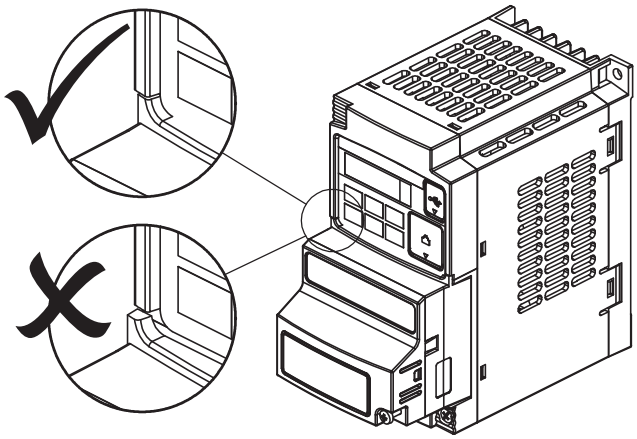

8 **Secure the DeviceNet Communications Unit in place to the inverter with the mounting screw.**

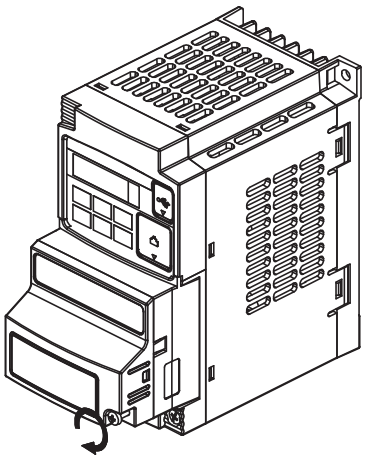

9 **Select an appropriate language from the warning label sheet and affix it on the English warning if necessary.**

Precautions for Correct Use

Some inverter models do not include a screw for the grounding cable. Please supply the recommended screw, lock-washer, and washer to attach the grounding cable.

Ground cable screw selection - MX2-series

Inverter Model	Grounding Cable Attachment Screw
3-phase 200V 5.5to 7.5 kW	M4 x 6
3-phase 400V 5.5to 7.5 kW	
3-phase 200V 11 to 15 kW	M5 x 6
3-phase 400V 11 to 15 kW	

Additional Information

For how to remove the DeviceNet Communications Unit, refer to *6-6 Removing DeviceNet Communications Unit* on page 6-12.

2-2-2 Mounting Procedure of DeviceNet Communications Unit on RX-series Inverter

[Preparation]

- Before use, cut the FG cable into an appropriate length for the distance to the Inverter's ground terminal and the size of terminal block, and crimp the crimp terminal.
- For the position of ground terminal and the size of terminal block, refer to Arrangement of Main Circuit Terminal Block and External Dimensions in the user's manual for MX2 or RX-V1 Inverters.

1 **Remove the following parts from the RX-series Inverter:**

A. Digital Operator
B. Spacer cover
C. Terminal cover
D. Front cover
E. Operator connector

Remove the operator connector (E) only if you connect the LED operator via a cable.

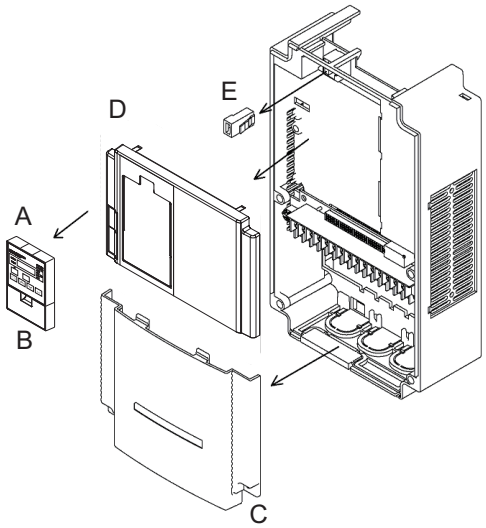

2 **Cut out the two plastic break-outs from the front cover.**
Make sure no sharp edges remain.

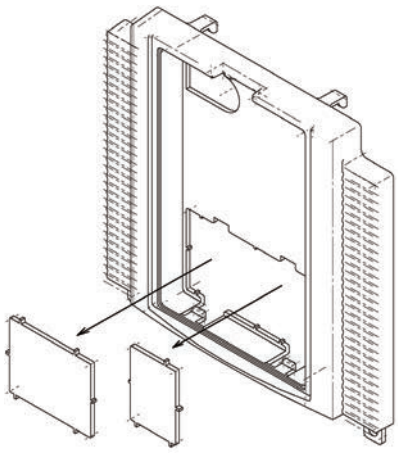

3 **Reinstall the front cover and tighten the screws.**

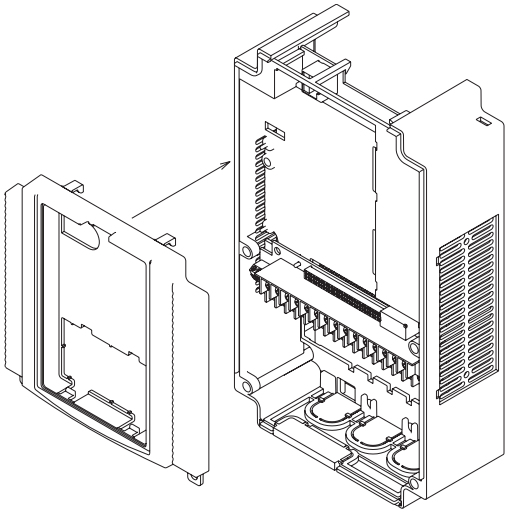

4 **Connect the connector of inverter connection PCB of DeviceNet Communications Unit to the connector of inverter.**

Method:
First align the small hole (B) on the Inverter connection PCB with the guide-post (D) in the Inverter.

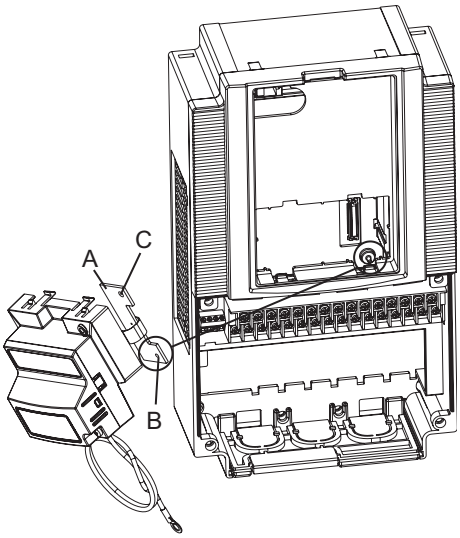

Then, align the larger hole on the Inverter connection PCB (C) with the threaded hole (F) in the Inverter.
Push the Inverter connector into place.

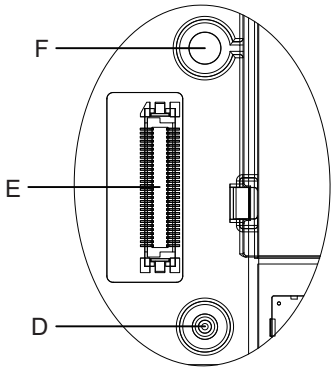

Precautions for Correct Use

The Inverter connector is fixed with a sufficient binding force against vibration. It is not necessary to secure the Inverter connection PCB with screws.

5 **Fold the flat cable (B) into the middle of the Unit so that the flat cable will not be pinched between the DeviceNet Communications Unit and the front cover of inverter. (As shown with A)**

Precautions for Correct Use

- When mounting the DeviceNet Communications Unit, be sure that the flat cable is not pinched.
- When mounting the DeviceNet Communications Unit, be careful about burrs of the break-outs on the inverter.
- When removing the DeviceNet Communications Unit, do not pull the flat cable.

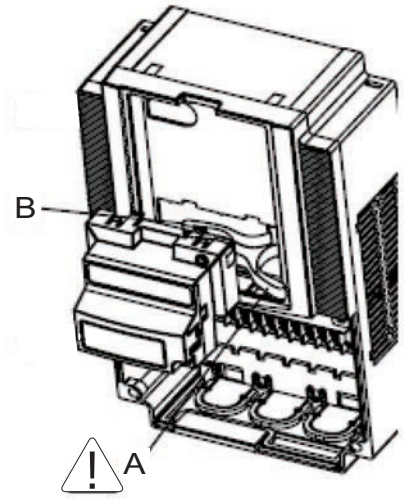

6 **Install DeviceNet Communications Unit on the Inverter.**

(a) Insert two locking pins of the upper DeviceNet Communications Unit in the break-outs and push it up.

(b) Insert the bottom part of the DeviceNet Communications Unit while pushing it up.

(c) Push the DeviceNet Communications Unit down and fix it.

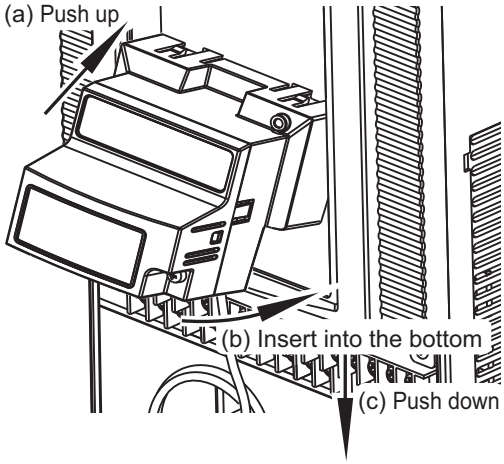

7 **Insert the DeviceNet Communications Unit fixation screw into the hole shown in the right figure, and tighten it to fix the Unit.**

Be careful not to overtighten the screw.

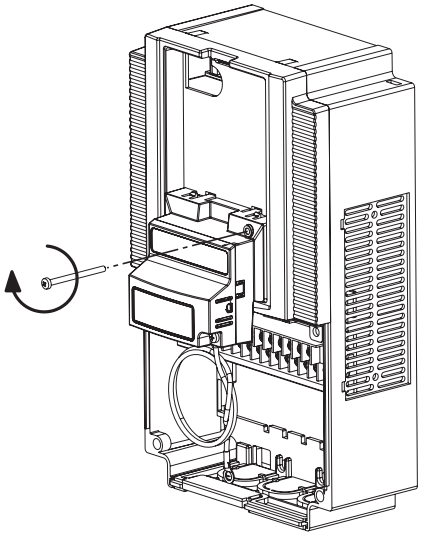

8 **Connect the grounding cable of the DeviceNet Communications Unit to the ground terminal of the inverter.**

Make sure that the ground terminal is marked with grounding symbol.

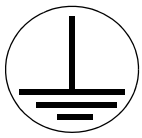

The position of grounding symbol differs depending on the capacity of inverter. The figure is just an example.

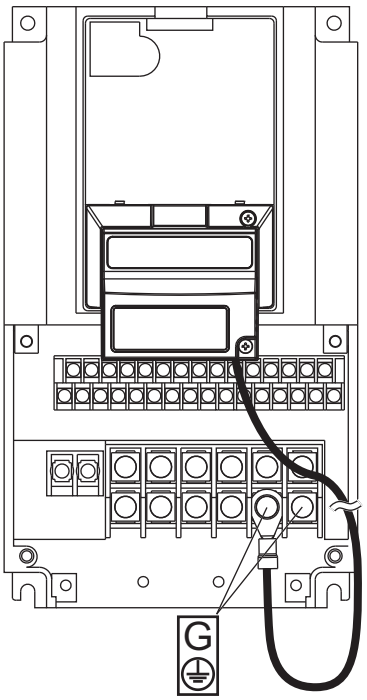

9 **Reinstall the terminal cover and tighten the two screws to fix it in position.**

Reinstall the terminal cover under the DeviceNet Communications Unit onto the Inverter (B).

Tighten the two screws (A).

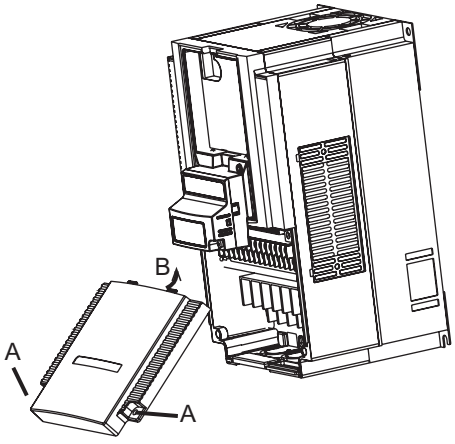

10 **Install the Digital Operator above the DeviceNet Communications Unit.**

Keep the spacer cover you removed in a safe place.

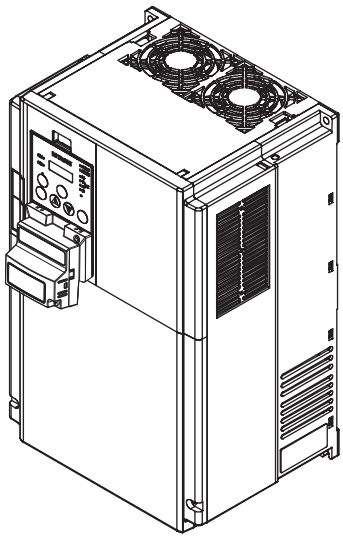

If You Use the LCD Digital Operator

11 **Connect the Digital Operator via a straight Ethernet cable to the RJ45 connector in the Inverter.**

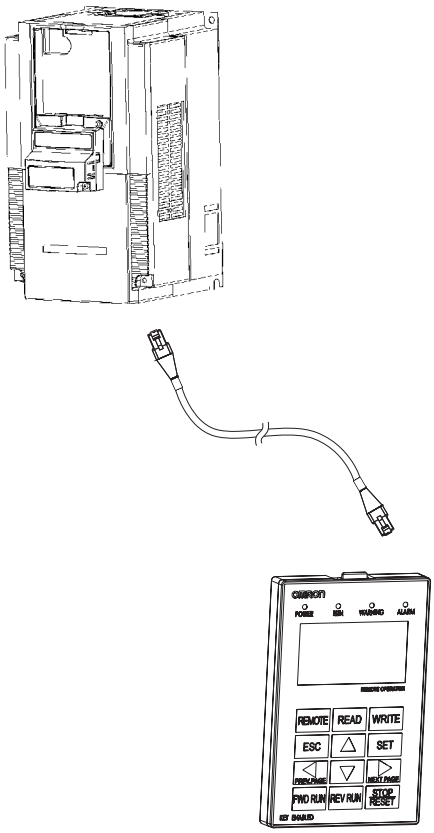

12 **Set the required Inverter parameters.**

Additional Information

Please refer to *Section 3 Network Startup* on page 3-1 and *Section 4 Remote I/O* on page 4-1.

13 **When the required inverter parameters are set properly, remove the straight Ethernet cable from the Inverter.**

Additional Information

For how to remove the DeviceNet Communications Unit, refer to *6-6 Removing DeviceNet Communications Unit* on page 6-12.

2-2-3 Operating Environment

For information on the installation environment, refer to Section 2 Design of the MX2 User's Manual (Cat. No. I570) or RX User's Manual (Cat. No. I578). In addition to this, provide sufficient clearance to allow connection and removal of the DeviceNet connector. When connecting a cable, provide a sufficient allowance to prevent it from being pulled or bent.

2-2-4 Connector Wiring

The DeviceNet Communications Unit is supplied with a connector with seals (color chips) corresponding to the wire colors. Connect each wire of the cable to the connector terminal according to the seal colors. No termination is provided inside the DeviceNet Communications Unit.

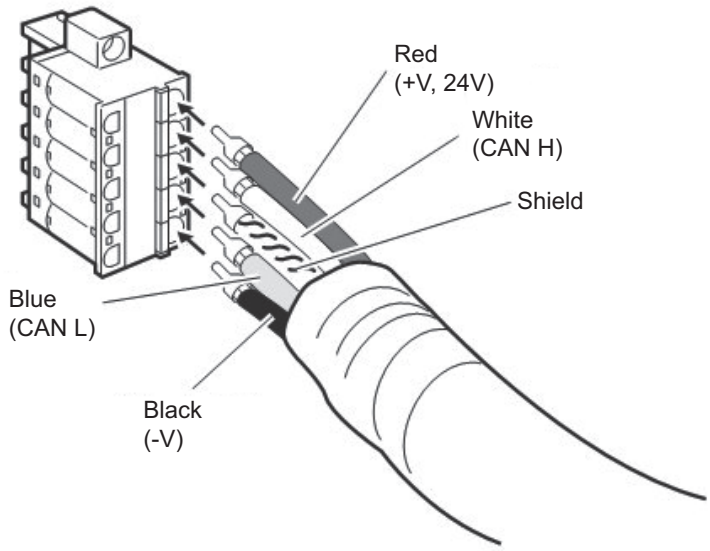

● DeviceNet connector signals

Color	Signal	Description
Red	+V	Communications power supply (+24 VDC)
White	CAN H	Communications data line (High)
–	Shield	Cable shielding
Blue	CAN L	Communications data line (Low)
Black	-V	Communications power supply GND

Precautions for Correct Use

- For DeviceNet systems, use DeviceNet cables that conform to the DeviceNet specifications.
- Connect a termination resistance at each end of the trunk line. Be sure to use 121Ω termination resistances.
- Connect cable shielding to the connector at each end of the cable.
- For details about cables and connectors, refer to 2-3 Cables, Connectors, and Related Devices of DeviceNet Operation Manual (Cat. No. W267).

Connection of Thin Cables with the Multi-drop Connector

To connect thin cables by using the multi-drop connector, use a crimp terminal as shown below to insert two wires with the same color into the same connector hole.

Example. When using a non-screw type connector

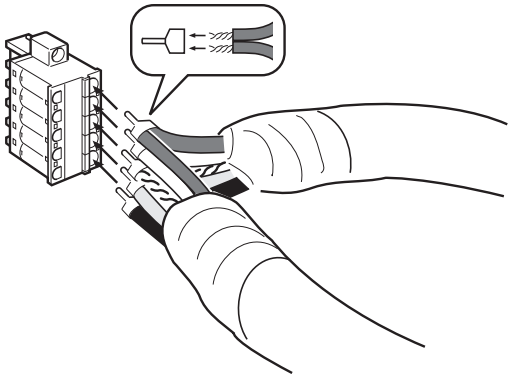

Use a dedicated crimp terminal to crimp the two wires inserted into the same hole, as shown below.

2-wire crimping

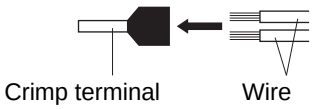

OMRON recommends the following crimp terminal and crimping tool. Both products are manufactured by PHOENIX CONTACT.

Crimp terminal	Crimping tool
Model: AI-TWIN2x0.5-8WH (Product number 3200933)	Model: UD06 (Product number 1204436)

3

Network Startup

This section describes inverter parameter settings and DeviceNet settings/startup.

3-1 Inverter Configuration 3-2
3-1-1 Basic and Extended Speed I/O Settings 3-2
3-1-2 Remote I/O Settings Using Torque Reference 3-6
3-1-3 Special I/O and Flexible Format Settings 3-9
3-1-4 Utilizing Multi-function Inputs/Outputs for Host 3-12

3-2 Network Configuration (Scan List Configuration) 3-14
3-2-1 EDS File Installation 3-14
3-2-2 Fixed Allocation Steps 3-14
3-2-3 User Allocation Steps (Scan List Configuration) 3-16

3-3 Device Parameters with EDS File 3-21
3-3-1 How to Edit Device Parameters with EDS File 3-21
3-3-2 Restrictions of Edit Device Parameters Function with EDS File 3-22

3-4 Editing Parameters with CX-Drive 3-25
3-4-1 Connecting CX-Drive (via DeviceNet) 3-25
3-4-2 Outline of CX-Drive 3-30

3-1 Inverter Configuration

To use the DeviceNet Communications Unit, you need to configure node addresses and the necessary Remote I/O and other functions
The configuration of the DeviceNet Communications Unit is all done through parameters built into the MX2/RX-series Inverter.
This section describes the inverter parameters that must be configured to use the DeviceNet Communications Unit.
Because the settings of the DeviceNet Communications Unit vary depending on the type of the Remote I/O function to be used, information in this section is described for each of the following three types of Remote I/O.

Section	Name	Applicable Remote I/O	Outline
3-1-1	Basic and Extended Speed I/O Settings	Basic Speed I/O Extended Speed I/O Extended Speed and Acceleration Control	Types of Remote I/O that support general speed control applications.
3-1-2	Remote I/O Settings Using Torque Reference	Extended Speed and Torque Control Extended Control I/O Extended Control I/O and Multi function I/O Monitor	Types of Remote I/O that include the torque reference and other interfaces related to torque control. These Remote I/O types can be configured even if the torque reference is not used.
3-1-3	Special I/O and Flexible Format Settings	Special I/O Flexible Format	Types of Remote I/O that utilize Modbus communication, allowing flexible function selection.

Precautions for Correct Use

- For details about the Remote I/O function, refer to *Section 4 Remote I/O* on page 4-1.
- Parameter configuration is required if you install the DeviceNet Communications Unit on an MX2/RX-series Inverter for the first time.
  After replacing the DeviceNet Communications Unit with new one, the inverter parameters is retained and thus parameter configuration is not required.

3-1-1 Basic and Extended Speed I/O Settings

Normally, inverter operation can be controlled using the Basic Speed I/O or Extended Speed I/O function included as standard in DeviceNet.
To set the acceleration/deceleration time, however, you need to use OMRON's unique Extended Speed and Acceleration Control function.
This section explains how to configure these three types of Remote I/O.
Inverter parameters can be configured using the Digital Operator, CX-Drive, or a DeviceNet EDS file (in CX-Integrator).

Complete Parameter Display

By default, you cannot view all parameters. To display all parameters, set Display Selection (b037) to 00: Complete display.

Parameter No.	Function Name	Monitor or Data Range
b037	Display Selection	00: Complete display 01: Individual display of functions 02: User setting + b037 03: Data comparison display 04: Basic display 05: Monitor display only

DeviceNet Node Address Setting

Inverter parameter P192 sets the DeviceNet node address MAC ID.

Parameter	Description	Setting
P192	DeviceNet Node Address	0 to 63 (Default: 63)

Remote I/O Setting

Inverter parameter P046 (Assembly Instance No.) sets the type of Remote I/O.
Select the combination of output and input that fits your application requirements.
The settings for Basic Speed I/O, Extended Speed I/O, and Extended Speed and Acceleration Control are shown below.

- Basic Speed I/O: P046 = 00
- Extended Speed I/O: P046 = 01
- Extended Speed and Acceleration Control: P046 = 07

Parameter	Description	Setting	Assembly No. (hex)		No. of occupied bytes (No. of words)	
			Output	Input	Output	Input
P046	Assembly Instance No.	00: Basic Speed I/O	20	70	4 (2)	4 (2)
		01: Extended Speed I/O	21	71	4 (2)	4 (2)
		07: Extended Speed and Acceleration Control	110	111	8 (4)	8 (4)

Reset Mode Setting

For the MX2/RX-series, by default, the Reset mode is set to Always enabled. This means that resetting the inverter also resets the DeviceNet Communications Unit, which in turn causes the communication connection to be reset.
To prevent the communication connection from being reset when the inverter is reset, OMRON recommends the following setting.
For the details of this parameter, refer to the MX2 User's Manual (Cat. No. I570) or RX User's Manual (Cat. No. I578).

Parameter	Description	Setting
C102	Reset Selection	03: Trip reset only (recommended setting)

Detailed DeviceNet Communications Unit Settings

The DeviceNet Communications Unit can be configured in more detail using inverter parameters P044, P045, P048, and P049.
Set these parameters according to the following explanation.

● Detailed DeviceNet Communications Unit Settings

Parameter	Description	Setting
P044	Communications Error Detection Timer Setting	Monitors data exchange between the inverter and the DeviceNet Communications Unit. Normally, this parameter is not required. 0 to 9999 in units of 0.01 s . (Default: 1.00) 0: Disabled
P045	Operation at Host Communications Error Selection	Sets the inverter operation if a network error such as Busoff occurs. 00: Trip (Default) 01: Trip after deceleration stop 02: Ignore 03: Free-run stop 04: Deceleration stop
P048	Operation at Idle Mode Detection Setting	Sets the inverter operation in Network Idle mode. OMRON's DeviceNet Master Units do not support transition to the Network Idle mode and therefore this parameter is not required. 00: Trip (Default) 01: Trip after deceleration stop 02: Ignore 03: Free-run stop 04: Deceleration stop
P049	Number of Poles for Rotation Speed Setting (For conversion to the rpm unit used in DeviceNet communications)	Sets the number of poles on the motor. Use this parameter to execute inverter commands on DeviceNet in rpm. 0/2/4/6/8/10/12/14/16/18/20/22/24/26/28/30/34/36/38/40/42/44/46/48 0 (Default): Frequency setting (in units of 0.01 Hz) Not 0: rpm (in units of rpm) Conversion equation: rpm = 120 x Frequency (Hz) / P049

Frequency Reference/RUN Command Settings

Inverter parameters A001 and A002 set Frequency reference selection and RUN command selection. When P046 = 0 (Basic Speed I/O), 1 (Extended Speed I/O), or 7 (Extended Speed and Acceleration Control), set these parameters according to the following table.

MX2

● Destination Selection Parameter Settings

Parameter	Description	Setting
A001	1st Frequency Reference Selection	04: Option
A002	1st RUN Command Selection	

RX

● Destination Selection Parameter Settings

Parameter	Description	Setting
A001	1st Frequency Reference Selection	05: Option 2
A002	1st RUN Command Selection	

Precautions for Correct Use

To switch the Control Method using the REF (Net.Ref.) or CTR (Net.Ctrl.) bit signal, set as follows.

Bit	Name	Description
CTR	Net.Ctrl.	0: Follow the setting of parameter A002. 1: Follow the reference from network.
REF	Net.Ref.	0: Follow the setting of parameter A001. 1: Follow the reference from network.

Set the Control Method to which you want to switch in parameter A001/A002.

Restarting the Inverter

Be sure to cycle the power supply of the MX2/RX-series inverter to enable the changes.

Precautions for Correct Use

- Be sure that the POWER LED indicator is not lit before cycling the power supply when restarting the MX2/RX-series Inverter. The time until the light turns off varies with the inverter model.
- Some DeviceNet Master Units in market may send Idle messages during specific events (start-up, PLC program mode, etc). In this case, consider to set Operation at Idle Mode Detection Setting (P048) to 2 (Ignore).

3-1-2 Remote I/O Settings Using Torque Reference

The MX2/RX-series Inverter provides the torque control function.
To enable torque control, use OMRON's unique Extended Speed and Torque Control, Extended Control I/O, or Extended Control I/O and Multi function I/O Monitor.
This section explains how to configure the Remote I/O settings using the torque reference.
Inverter parameters can be configured using the Digital Operator, CX-Drive, or a DeviceNet EDS file (in CX-Integrator).

DeviceNet Node Address Setting

Inverter parameter P192 sets the DeviceNet node address MAC ID.

Parameter	Description	Setting
P192	DeviceNet Node Address	0 to 63 (Default: 63)

Remote I/O Setting

Inverter parameter P046 (Assembly Instance No.) sets the type of Remote I/O.
Select the combination of output and input that fits your application requirements.
Here, you configure the settings of Extended Speed and Torque Control, Extended Control I/O, or Extended Control I/O and Multi function I/O Monitor.

- Extended Speed and Torque Control: P046 = 02
- Extended Control I/O: P046 = 04
- Extended Control I/O and Multi function I/O Monitor: P046 = 05

Parameter	Description	Setting	Assembly No. (hex)		No. of occupied bytes (No. of words)	
			Output	Input	Output	Input
P046	Assembly Instance No.	02: Extended Speed and Torque Control	123	173	6 (3)	6 (3)
		04: Extended Control I/O	101	151	8 (4)	8 (4)
		05: Extended Control I/O and Multi function I/O Monit	101	153	8 (4)	9 (4.5)

Reset Mode Setting

For the MX2/RX-series, by default, the Reset mode is set to Always enabled. This means that resetting the inverter also resets the DeviceNet Communications Unit, which in turn causes the communication connection to be reset.
To prevent the communication connection from being reset when the inverter is reset, OMRON recommends the following setting.
For the details of this parameter, refer to the MX2 User's Manual (Cat. No. I570) or RX User's Manual (Cat. No. I578).

Parameter	Description	Setting
C102	Reset Selection	03: Trip reset only (recommended setting)

Detailed DeviceNet Communications Unit Settings

The DeviceNet Communications Unit can be configured in more detail using inverter parameters P044, P045, P048, and P049.
Set these parameters according to the following explanation.

● Detailed DeviceNet Communications Unit Settings

Parameter	Description	Setting
P044	Communications Error Detection Timer Setting	Monitors data exchange between the inverter and the DeviceNet Communications Unit. Normally, this parameter is not required. 0 to 9999 in units of 0.01 s . (Default: 1.00) 0: Disabled
P045	Operation at Host Communications Error Selection	Sets the inverter operation if a network error such as bus-off occurs. 00: Trip (Default) 01: Trip after deceleration stop 02: Ignore 03: Free-run stop 04: Deceleration stop
P048	Operation at Idle Mode Detection Setting	Sets the inverter operation in Network Idle mode. OMRON's DeviceNet Master Units do not support transition to the Network Idle mode and therefore this parameter is not required. 00: Trip (Default) 01: Trip after deceleration stop 02: Ignore 03: Free-run stop 04: Deceleration stop
P049	Number of Poles for Rotation Speed Setting (For conversion to the rpm unit used in DeviceNet communications)	Sets the number of poles on the motor. Use this parameter to execute inverter commands on DeviceNet in rpm. 0/2/4/6/8/10/12/14/16/18/20/22/24/26/28/30/34/36/38/40/42/44/46/48 0 (Default): Frequency setting (in units of 0.01 Hz) Not 0: rpm (in units of rpm) Conversion equation: rpm = 120 x Frequency (Hz) / P049

Frequency Reference/RUN Command Settings

Inverter parameters A001 and A002 set Frequency reference selection and RUN command selection. When P046 = 2 (Extended Speed and Torque Control), 4 (Extended Control I/O), or 5 (Extended Control I/O and Multi function I/O Monitor), set the these parameters according to the following table.

MX2 ● Destination Selection Parameter Settings

Parameter	Description	Setting
A001	1st Frequency Reference Selection	04: Option
A002	1st RUN Command Selection	

RX ● Destination Selection Parameter Settings

Parameter	Description	Setting
A001	1st Frequency Reference Selection	05: Option 2
A002	1st RUN Command Selection	

Precautions for Correct Use

To switch the Control Method using the REF (Net.Ref.) or CTR (Net.Ctrl.) bit signal, set as follows.

Bit	Name	Description
CTR	Net.Ctrl.	0: Follow the setting of parameter A002. 1: Follow the reference from network.
REF	Net.Ref.	0: Follow the setting of parameter A001. 1: Follow the reference from network.

Set the Control Method to which you want to switch in parameter A001/A002.

Torque Control Settings

To use torque control, configure the parameters related to torque control according to the MX2/RX-series User's Manual.
Configure the torque control parameters as follows if you want to use the Torque Reference or Torque Bias Mode on DeviceNet Remote I/O.

MX2 ● Torque Control Parameter Settings

Parameter	Description	Setting
P033	Torque Reference Input Selection	06: Option
P036	Torque Bias Mode	05: Option

RX ● Torque Control Parameter Settings

Parameter	Description	Setting
P033	Torque Reference Input Selection	07: Option 2
P036	Torque Bias Mode	06: Option 2

Restarting the Inverter

Be sure to cycle the power supply of the MX2/RX-series Inverter to enable the changes.

Precautions for Correct Use

- Be sure that the POWER LED indicator is not lit before cycling the power supply when restarting the MX2/RX-series Inverter. The time until the light turns off varies with the inverter model.
- Some DeviceNet Master Units in market may send Idle messages during specific events (start-up, PLC program mode, etc). In this case, consider to set Operation at Idle Mode Detection Setting (P048) to 2 (Ignore).

3-1-3 Special I/O and Flexible Format Settings

Special I/O and Flexible Format that utilize the Modbus communication method enable you to control various inverter functions and parameters through the Remote I/O function.
This section describes how to configure these types of Remote I/O.
Inverter parameters can be configured using the Digital Operator, CX-Drive, or a DeviceNet EDS file (in CX-Integrator).

DeviceNet Node Address Setting

Inverter parameter P192 sets the DeviceNet node address MAC ID.

Parameter	Description	Setting
P192	DeviceNet Node Address	0 to 63 (Default: 63)

Remote I/O Setting

Inverter parameter P046 (Assembly Instance No.) sets the type of Remote I/O.
Select the combination of output and input that fits your application requirements.

- Special I/O: P046 = 03
- Flexible Format: P046 = 06

Parameter	Description	Setting	Assembly No. (hex)		No. of occupied bytes (No. of words)	
			Output	Input	Output	Input
P046	Assembly Instance No.	03: Special I/O*1	100	150	8 (4)	8 (4)
		06: Flexible Format	139	159	20 (10)*2	20 (10)*2

*1 The format of Special I/O is different from that of the conventional Advanced Remote I/O.
*2 If you select Flexible Format, the number of occupied bytes (words) will change depending on the number of Modbus registers set in parameters P160 to 179.

Additional Information

The DeviceNet Communications Unit supports read/write of double-word data. Refer to *4-4-2 Special I/O (100/150)* on page 4-17.

Reset Mode Setting

For the MX2/RX-series, by default, the Reset mode is set to Always enabled. This means that resetting the inverter also resets the DeviceNet Communications Unit, which in turn causes the communication connection to be reset.
To prevent the communication connection from being reset when the inverter is reset, OMRON recommends the following setting.
For the details of this parameter, refer to the MX2 User's Manual (Cat. No. I570) or RX User's Manual (Cat. No. I578).

Parameter	Description	Setting
C102	Reset Selection	03: Trip reset only (recommended setting)

Detailed DeviceNet Communications Unit Settings

The DeviceNet Communications Unit can be configured in more detail using inverter parameters P044, P045, P048, and P049.
Set these parameters according to the following explanation.

● Detailed DeviceNet Communications Unit Settings

Parameter	Description	Setting
P044	Communications Error Detection Timer Setting	Monitors data exchange between the Inverter and the DeviceNet Communications Unit. Normally, this parameter is not required. 0 to 9999 in units of 0.01 s . (Default: 1.00) 0: Disabled
P045	Operation at Host Communications Error Selection	Sets the inverter operation if a network error such as bus-off occurs. 00: Trip (Default) 01: Trip after deceleration stop 02: Ignore 03: Free-run stop 04: Deceleration stop
P048	Operation at Idle Mode Detection Setting	Sets the inverter operation in Network Idle mode. OMRON's DeviceNet Master Units do not support transition to the Network Idle mode and therefore this parameter is not required. 00: Trip (Default) 01: Trip after deceleration stop 02: Ignore 03: Free-run stop 04: Deceleration stop
P049	Number of Poles for Rotation Speed Setting (For conversion to the rpm unit used in DeviceNet communications)	For other types of Remote I/O that use DeviceNet communications, the number of poles on the motor is set for the Rotation Speed Reference. However, this setting is disabled for Remote I/O types that utilizes Modbus communication. This parameter is fixed to the frequency value (0.01 Hz) regardless of the value you set.

Frequency Reference/RUN Command Settings

Inverter parameters A001 and A002 set Frequency reference selection and RUN command selection. When P046 is set to 3: Special I/O or 6: Flexible Format, Modbus communication is used. Set these parameters according to the following table.

MX2

● Destination Selection Parameter Settings

Parameter	Description	Setting
A001	1st Frequency Reference Selection	03: Modbus communication (Modbus-RTU)
A002	1st RUN Command Selection	

RX

● Destination Selection Parameter Settings

Parameter	Description	Setting
A001	1st Frequency Reference Selection	03: Modbus communication (Modbus-RTU)
A002	1st RUN Command Selection	

Torque Control Settings

To use torque control, configure parameters according to the MX2/RX User's Manual.
To configure the Torque reference and Torque bias settings through the Remote I/O function, set torque control parameters as follows.

MX2

● Torque Control Parameter Settings

Parameter	Description	Setting
P033	Torque Reference Input Selection	03: Operator To input the torque reference through Special I/O or Flexible Format, allocate P034 to the torque reference.
P036	Torque Bias Mode	01: Operator To input the Torque Bias mode through Special I/O or Flexible Format, allocate 037 to the torque bias.

RX

● Torque Control Parameter Settings

Parameter	Description	Setting
P033	Torque Reference Input Selection	03: Operator To input the torque reference through Special I/O or Flexible Format, allocate P034 to the torque reference.
P036	Torque Bias Mode	01: Operator To input the Torque Bias mode through Special I/O or Flexible Format, allocate 037 to the torque bias.

Flexible Format Settings

The Flexible Format (Assembly 139/159) gives you the freedom to allocate inverter Modbus registers to Remote I/O devices. A maximum of 10 words can be allocated for input and output.
Please refer to *4-4 Special I/O and Flexible Format* on page 4-17 for details.

Parameter	Description	Setting
P160	Output Register 1 Contents	Modbus register allocated to general-purpose output word 1
P161	Output Register 2 Contents	Modbus register allocated to general-purpose output word 2
P162	Output Register 3 Contents	Modbus register allocated to general-purpose output word 3
P163	Output Register 4 Contents	Modbus register allocated to general-purpose output word 4
P164	Output Register 5 Contents	Modbus register allocated to general-purpose output word 5
P165	Output Register 6 Contents	Modbus register allocated to general-purpose output word 6
P166	Output Register 7 Contents	Modbus register allocated to general-purpose output word 7
P167	Output Register 8 Contents	Modbus register allocated to general-purpose output word 8
P168	Output Register 9 Contents	Modbus register allocated to general-purpose output word 9
P169	Output Register 10 Contents	Modbus register allocated to general-purpose output word 10
P170	Input Register 1 Contents	Modbus register allocated to general-purpose input word 1
P171	Input Register 2 Contents	Modbus register allocated to general-purpose input word 2
P172	Input Register 3 Contents	Modbus register allocated to general-purpose input word 3
P173	Input Register 4 Contents	Modbus register allocated to general-purpose input word 4
P174	Input Register 5 Contents	Modbus register allocated to general-purpose input word 5
P175	Input Register 6 Contents	Modbus register allocated to general-purpose input word 6
P176	Input Register 7 Contents	Modbus register allocated to general-purpose input word 7
P177	Input Register 8 Contents	Modbus register allocated to general-purpose input word 8
P178	Input Register 9 Contents	Modbus register allocated to general-purpose input word 9
P179	Input Register 10 Contents	Modbus register allocated to general-purpose input word 10

Restarting the Inverter

Be sure to cycle the power supply of the MX2/RX-series Inverter to enable the changes.

Precautions for Correct Use

- Be sure that the POWER LED indicator is not lit before cycling the power supply when restarting the MX2/RX-series Inverter. The time until the light turns off varies with the inverter model.
- Some DeviceNet Master Units in market may send Idle messages during specific events (start-up, PLC program mode, etc). In this case, consider to set Operation at Idle Mode Detection Setting (P048) to 2 (Ignore).

3-1-4 Utilizing Multi-function Inputs/Outputs for Host

The multi-function inputs and multi-function outputs built into the inverter can be used as general-purpose inputs and outputs for the host.
Configure a type of Remote I/O that includes the multi-function input monitor and multi-function output commands (Extended Control I/O, Extended Control I/O and Multi function I/O Monitor, Special I/O, or Flexible Format) and set parameters as follows.

Multi-function Input Settings

MX2

● Multi-function Input Monitor Settings

Parameter	Description	Setting
C001	Multi-function Input 1 Selection	No (255): No allocation Set these parameters to use the inverter inputs as the PLC's inputs.
C002	Multi-function Input 2 Selection	
C003	Multi-function Input 3 Selection	
C004	Multi-function Input 4 Selection	
C005	Multi-function Input 5 Selection	
C006	Multi-function Input 6 Selection	
C007	Multi-function Input 7 Selection	

RX

● Multi-function Input Monitor Settings

Parameter	Description	Setting
C001	Multi-function Input 1 Selection	No (255): No allocation Set these parameters to use the inverter inputs as the PLC's inputs.
C002	Multi-function Input 2 Selection	
C003	Multi-function Input 3 Selection	
C004	Multi-function Input 4 Selection	
C005	Multi-function Input 5 Selection	
C006	Multi-function Input 6 Selection	
C007	Multi-function Input 7 Selection	
C008	Multi-function Input 8 Selection	

Multi-function Output Settings

MX2

● Multi-function Output Terminal Parameter Settings

Parameter	Description	Setting
C021	Multi-function Output Terminal P1/EDM Selection	63: OPO (Option) Set these parameters to use the inverter outputs as the PLC's outputs.
C022	Multi-function Output Terminal P2 Selection	
C026	Multi-function Relay Output Selection	

RX

● Multi-function Output Terminal Parameter Settings

Parameter	Description	Setting
C021	Multi-function Output Terminal P1/EDM Selection	63: OPO (Option) Set these parameters to use the inverter outputs as the PLC's outputs.
C022	Multi-function Output Terminal P2 Selection	
C023	Multi-function Output Terminal P3 Selection	
C024	Multi-function Output Terminal P4 Selection	
C025	Multi-function Output Terminal P5 Selection	
C026	Multi-function Relay Output Selection	

3-2 Network Configuration (Scan List Configuration)

Network configuration is the process to set the DeviceNet Master Unit using CX-Integrator. Basically, you allocate each slave's Remote I/O functionality to the I/O Memory of the PLC or CPU Unit. There are two ways to do this, as follows.

- Fixed allocations (Automatic allocation)
- User allocations (Arbitrary, individual allocation)

For details about configuring the Master Unit (Model: CS1W-DRM21 (-V1)/CJ1W-DRM21) using the network configuration software CX-Integrator, refer to the CX-Integrator Operation Manual (Cat. No.W464).

3-2-1 EDS File Installation

For each combination of the MX2/RX-series Inverter model and the DeviceNet Communications Unit, a dedicated EDS file is required. EDS files provide the parameter data (defaults and ranges) for each inverter that CX-Integrator utilizes.

EDS files for DeviceNet Communications Units are installed on a CX-Integrator with the following version or higher.

Note that EDS files are not installed on a CX-Integrator with a version lower than the following version. Please update CX-ONE or CX-Integrator.

- CX-ONE Ver. 4.26
- CX-Integrator Ver. 2.55

3-2-2 Fixed Allocation Steps

Fixed allocation is the method of allocating each Slave to the allocation relay area based on the idea that "a single Slave node address occupies a single input word and a single output word." In this allocation method, each Slave's node address must be set according to the following rules.

- Node addresses must be set in a sequence starting with "0".
- If the maximum number of occupied input or output words is greater than 1 word, the Slave occupies more than one node address.
- If the maximum number of occupied input or output words is less than 1 word, the Slave occupies a single word (node address).

An example of fixed allocation is shown below. For each slave, set the node address enclosed in brackets [ ].

<table>
<tr><th rowspan="2">Fixed Allocations Address</th><th colspan="2">Output Allocation Relay Area</th><th colspan="3">Input Allocation Relay Area</th></tr>
<tr><th>Allocation Relay</th><th>15 to 0</th><th>Allocation Relay</th><th colspan="2">15 to 0</th></tr>
<tr><td>00</td><td>CIO 3200</td><td>16-point Output Unit
[Node Address 0]</td><td>CIO 3300</td><td colspan="2">– (Not allocatable)</td></tr>
<tr><td>01</td><td>CIO 3201</td><td>– (Not allocatable)</td><td>CIO 3301</td><td>– (Not allocatable)</td><td>8-point Input Unit
[Node Address 1]</td></tr>
<tr><td>02</td><td>CIO 3202</td><td rowspan="2">This DeviceNet Communications Unit [Node address 2]
Extended Speed I/O setting:
Occupies 2 output words</td><td>CIO 3302</td><td colspan="2" rowspan="2">This DeviceNet Communications Unit [Node address 2]
Extended Speed I/O setting:
Occupies 2 input words</td></tr>
<tr><td>03</td><td>CIO 3203</td><td>CIO 3303</td></tr>
</table>

Fixed Allocations Address	Output Allocation Relay Area		Input Allocation Relay Area	
	Allocation Relay	15 to 0	Allocation Relay	15 to 0
04	CIO 3204	This DeviceNet Communications Unit [Node address 4] Extended Control I/O setting: Occupies 4 output words	CIO 3304	This DeviceNet Communications Unit [Node address 4] Extended Control I/O setting: Occupies 4 input words
05	CIO 3205		CIO 3305	
06	CIO 3206		CIO 3306	
07	CIO 3207		CIO 3307	
08	CIO 3208	– (Not allocatable)	CIO 3308	16-point Input Unit [Node Address 8]
09	CIO 3209	...	CIO 3309	...

The actual fixed allocations steps for the DeviceNet Communications Unit are shown below.

1 **Power on the inverter(s) first and configure the following settings according to *3-1 Inverter Configuration* on page 3-2.**

- Set the node address. According to the fixed allocations node address setting example above, set inverter parameter P192 (DeviceNet Node Address).
- Set the type of Remote I/O. Set inverter parameter P046 (Assembly Instance No.) that suits your application.

Precautions for Correct Use

- Be sure to set the type of Remote I/O at this point. The number of words occupied by the DeviceNet Communications Unit varies depending on the set Remote I/O type. Unless the Remote I/O type is set correctly, automatic network configuration cannot be completed successfully.
- To connect additional DeviceNet Slaves, set the node addresses for them simultaneously at this point.

2 **Cycle the power supply of the inverter. Then, power ON all network components (Master Unit, other Slaves, and Communications power supply).**

3 **Once the network is restarted with the new settings, check that the DeviceNet Communications Unit's LED indicators indicate normal operation.**

Following the steps below to configure the Master Unit causes both the MS (Module Status) and NS (Network Status) LED indicators to light green.

If the LED indicators indicate a different pattern, please refer to *Section 6 Troubleshooting* on page 6-1 to take corrective action.

(1) Change the CS/CJ-series CPU Unit to Program mode.

(2) Set the Master Function Enable switch (Master Unit's allocation relay area CIO n, bit 06) from OFF to ON.

Note Skip this step if the Master function is already enabled.

(3) Set the Scan List Clear switch (Master Unit's allocation relay area CIO n, bit 01) from OFF to ON.

Note Skip this step if the Scan List is already enabled.

(4) Select a fixed allocation area between 1 and 3 (Master Unit's allocation relay area CIO n, bit 08 to 10).

(5) Set the Scan List Enable switch (Master Unit's allocation relay area CIO n, bit 00) from OFF to ON to enable the Scan List.

4 **Once the Scan List is completed, check each Slave's MS and NS LED indicator pattern to verify that the network has been established successfully.**
If all the Slaves are correctly configured, the MS and NS LED indicators light green. If the LED indicators indicate a different pattern, please refer to *Section 6 Troubleshooting* on page 6-1 to take corrective action.

Additional Information

The fixed allocation method requires no DeviceNet configuration tool. The Master Unit checks the connection information on each slave and automatically allocates the output and input data of the Slaves to the data areas of the OMRON CS/CJ-series.

3-2-3 User Allocation Steps (Scan List Configuration)

User allocation is the method of allocating each Slave to the allocation relay area using CX-Integrator. This allocation method allows a maximum of 63 node addresses to be used, thus ensuring efficient allocation of the allocation relay areas.
In addition, it allows up to two blocks of allocation relay areas to be set for input and output, in which you can allocate the Slaves flexibly in any order as follows:

- If the maximum number of occupied input or output words is greater than 1 word, the Slave occupies more than one node address.
- If the maximum number of occupied input or output words is less than 1 word, the Slave occupies only the low byte of that single word.

An example of user allocation is shown below. For each slave, you can set the node address enclosed in brackets [ ], regardless of the allocation relay area.

<table>
<tr><th rowspan="2">Fixed Allocation Address</th><th colspan="2">Output Allocation Relay Area</th><th colspan="2">Input Allocation Relay Area</th></tr>
<tr><th>Allocation Relay</th><th>15 to 0</th><th>Allocation Relay</th><th>15 to 0</th></tr>
<tr><td>00</td><td>CIO 3200</td><td>16-point Output Unit
[Node Address 0]</td><td>CIO 3300</td><td>16-point Input Unit
[Node Address 10]</td></tr>
<tr><td>01</td><td>CIO 3201</td><td>16-point Output Unit
[Node Address 1]</td><td>CIO 3301</td><td>8-point Input Unit [Node Address 12] | 8-point Input Unit [Node Address 11]</td></tr>
<tr><td>02</td><td>CIO 3202</td><td rowspan="2">This DeviceNet Communications Unit [Node address 21]
Extended Speed I/O setting:
Occupies 2 output words</td><td>CIO 3302</td><td rowspan="2">This DeviceNet Communications Unit [Node address 21]
Extended Speed I/O setting:
Occupies 2 input words</td></tr>
<tr><td>03</td><td>CIO 3203</td><td>CIO 3303</td></tr>
<tr><td>04</td><td>CIO 3204</td><td rowspan="4">This DeviceNet Communications Unit [Node address 22]
Extended Control I/O setting:
Occupies 4 output words</td><td>CIO 3304</td><td rowspan="4">This DeviceNet Communications Unit [Node address 22]
Extended Control I/O setting:
Occupies 4 input words</td></tr>
<tr><td>05</td><td>CIO 3205</td><td>CIO 3305</td></tr>
<tr><td>06</td><td>CIO 3206</td><td>CIO 3306</td></tr>
<tr><td>07</td><td>CIO 3207</td><td>CIO 3307</td></tr>
<tr><td>08</td><td>CIO 3208</td><td>16-point Output Unit
[Node Address 2]</td><td>CIO 3308</td><td>16-point Input Unit
[Node Address 13]</td></tr>
<tr><td>09</td><td>CIO 3209</td><td>···</td><td>CIO 3309</td><td>···</td></tr>
</table>

The actual user allocation steps for the DeviceNet Communications Unit using CX-Integrator are shown below.

1 **Power on the inverter(s) first and configure the following settings according to *3-1 Inverter Configuration* on page 3-2.**

- Set the node address. According to the user allocations node address setting example above, set inverter parameter P192 (DeviceNet Node Address).
- Set the type of Remote I/O. Set inverter parameter P046 (Assembly Instance No.) that suits your application.

Precautions for Correct Use

- Be sure to set the type of Remote I/O at this point. The number of words occupied by the DeviceNet Communications Unit varies depending on the set Remote I/O type. Unless the Remote I/O type is set correctly, automatic network configuration cannot be completed successfully.
- To connect additional DeviceNet Slaves, set the node addresses for them simultaneously at this point.

2 **Cycle the power supply of the inverter. Then, power ON all network components (Master Unit, other Slaves, and Communications power supply).**
Then, to configure the network, start the network configuration tool CX-Integrator.

3 **In CX-Integrator, right-click New Project, select Insert Network and register the DeviceNet network.**
If more than one Master Unit is mounted on a single CPU Unit, in CX-Integrator, select [Tools] - [Start Routing table] to set their network addresses.
However, if there is only a single Master Unit, select No network address.

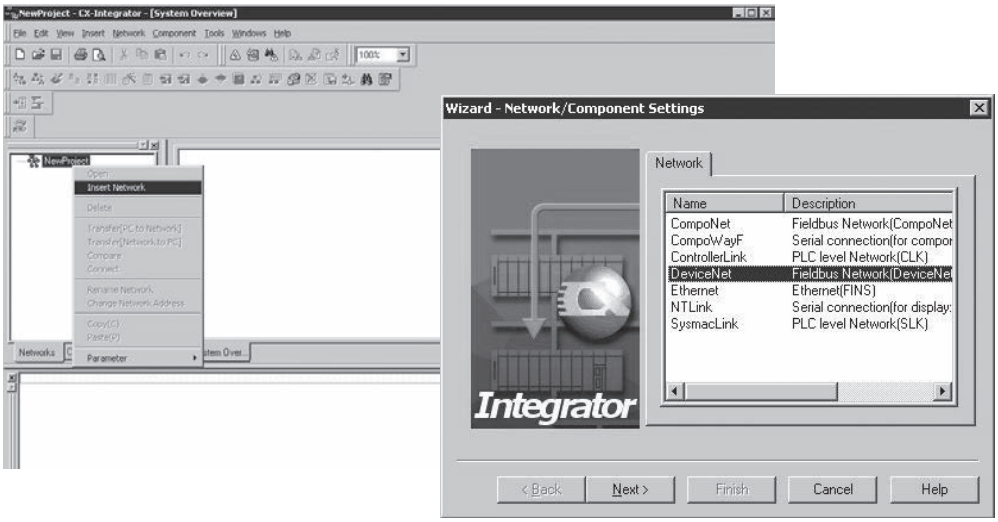

4 **Right-click in the network configuration window of CX-Integrator and select the required Master and Slave from the Components list to display all the network components.**

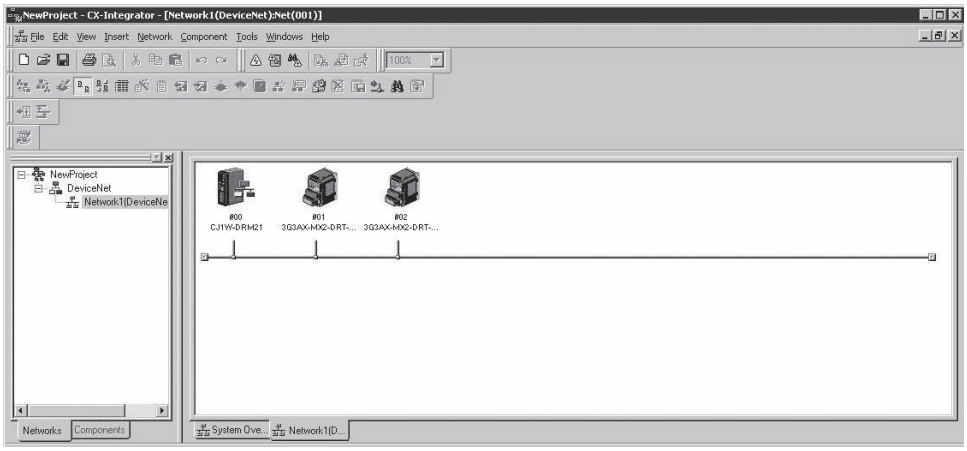

5 **Double-click the Master Unit displayed in the window. The [Edit Device Parameters] screen opens.**

In the [General] tab, select each Slave listed under Unregistered Device List and click the Registration ( ) button. The Slave is now registered and listed under Registered Device List.

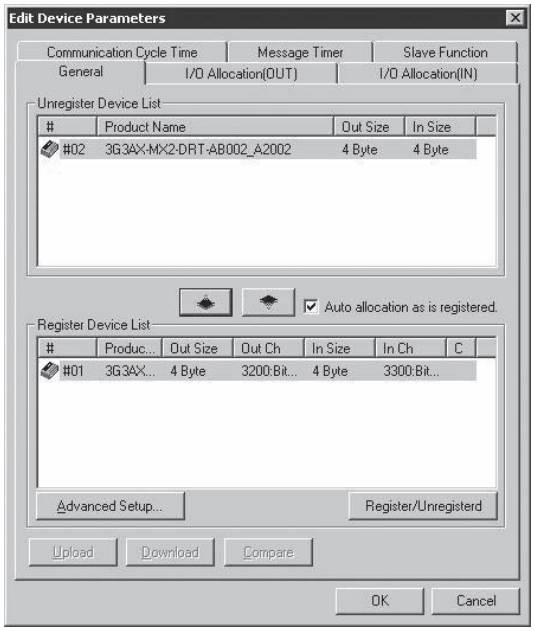

6 **In the [I/O Allocation (OUT)] tab, click the [Edit] button and enter the number of output words occupied by the inverter's Remote I/O function and its allocation relay area.**

If you change the Remote I/O function by editing the inverter's Assembly Instance No. (parameter P046), also change the number of occupied bytes according to the number of output words occupied by that changed Remote I/O.

In the box "Allocated", enter the start word of the allocation relay area to which the Slave's output is allocated.

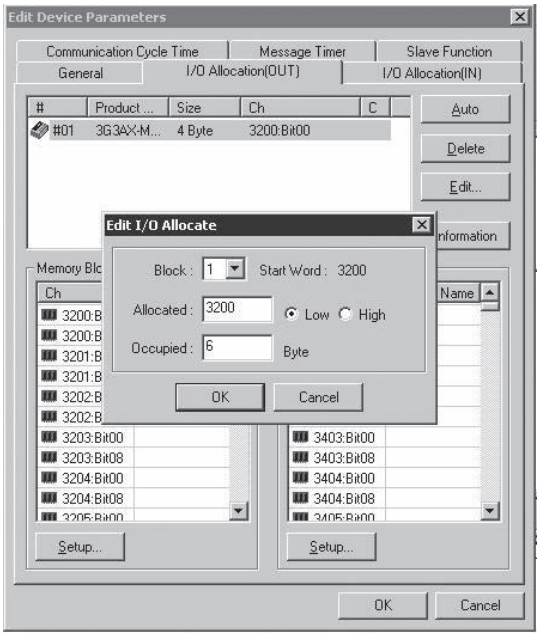

7 **In the [I/O Allocation (IN)] tab, click the [Edit] button and enter the number of input words occupied by the inverter's Remote I/O function and its allocation relay area.**

If you have changed the Remote I/O selection by editing the inverter's Assembly Instance No. (parameter P046), also change the number of occupied bytes according to the number of input words occupied by that changed Remote I/O.

In the box "Allocated", enter the start word of the allocation relay area to which the Slave's input is allocated.

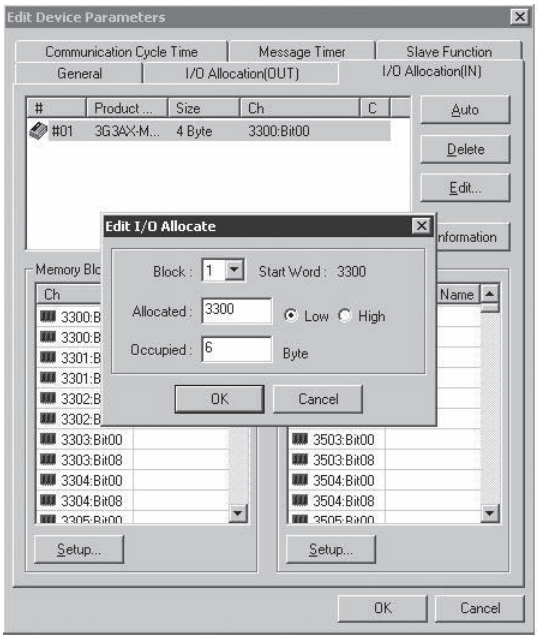

8 **Register all unregistered Slaves by repeating steps 5 to 7 and click the [OK] button in the lower right of the [Edit Device Parameters] screen to close it.**

9 **Following the above steps to edit the network configuration (Scan List) of the Master Unit results in a conflict with the Slave information and an yellow exclamation point symbol [ ] appears under each Slave.**

To solve this conflict, select each Slave in CX-Integrator's Network Configuration window. Then, right-click each Slave and select [Property] - [Slave Property]. In the screen displayed, select the [I/O Information] tab and click the [Get I/O Size from the Scanlist.] button and solve the conflict. When this process is done for all the Slaves, save the project.

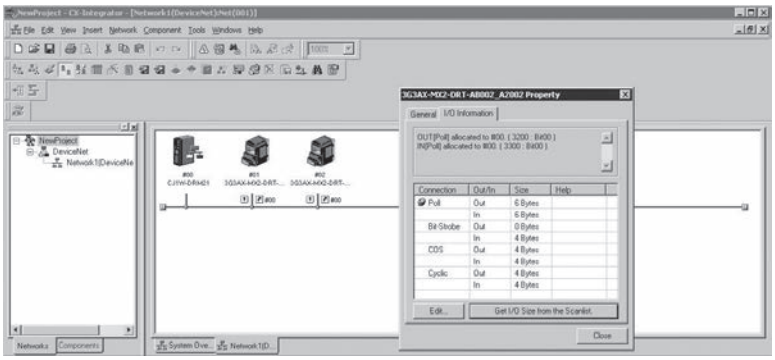

Precautions for Correct Use

- Be sure to get the Scan List in the I/O Information tab for each slave. If there is a conflict between the Scan List and I/O information of any Slave, you may not be able to configure the network successfully.
- Each EDS file of the DeviceNet Communications Unit contains a specific Assembly Instance No. (parameter P046) for selecting the Remote I/O function.
  This means that downloading a wrong EDS file causes the Assembly Instance No. (parameter P046) to be overwritten, resulting in an error in the network configuration process.
  Therefore, OMRON recommends that you edit and save parameter P046 of the EDS file according to the actual parameter setting of your inverter.

10 **Make CX-Integrator online and right-click the [DeviceNet] icon under the project to select the connection.**

To download the Scan List into the Master Unit, double-click the Master Unit in the network configuration window, and click the [Download] button in the [Edit Device Parameters] screen.

11 **Restart the network (cycle the power supply) and check the MS and NS LED indicators on the Master Unit and on each Slave Unit to verify that the network has been established successfully.**

If all the Slaves are correctly configured, the MS and NS LED indicators light green.
If the LED indicators indicate a different pattern, please refer to *Section 6 Troubleshooting* on page 6-1 to take corrective action.

Precautions for Correct Use

- If you have changed any setting of the Master Unit, be sure to cycle the power supply of the inverter to enable the new setting.
- For a third-party Master, change inverter parameter P046 according to the Master Unit's setting.

3-3 Device Parameters with EDS File

In DeviceNet communications, EDS files are used to establish communication connection.
EDS files for DeviceNet Communications Units are installed with CX-Integrator (Ver. 2.55 or higher).
Using a correct EDS file, you can edit inverter parameters in the [Edit Device Parameters] screen.
This section describes how to use an EDS file for editing device parameters and the functional restrictions applied when using it.

3-3-1 How to Edit Device Parameters with EDS File

In CX-Integrator, double-click the DeviceNet Communications Unit displayed in the Network Configuration window. Then, the [Edit Device Parameters] screen opens. The [Edit Device Parameters] screen provides the following functions.

Function	Detailed Description
Parameter group selection	Inverter parameters are divided into groups A to P. You can select the parameter group that is displayed in the Parameter Edit window.
Parameter Edit window	The window where you can edit the set inverter parameter values. To edit a currently set parameter value, double-click the Value area for that parameter. However, you cannot edit the value of any read-only parameter.
Upload inverter parameters	When CX-Integrator is connected online, clicking the [Upload] button causes all the inverter parameter settings to be uploaded. Remember that the uploaded settings will overwrite the parameter values displayed in the Parameter Edit window. Before uploading, be sure to save the edited data.*1
Download inverter parameters	When CX-Integrator is connected online, clicking the [Download] button causes all the inverter parameter settings to be downloaded via DeviceNet communications. *2
Compare inverter parameters	When CX-Integrator is connected online, clicking the [Compare] button causes all the current inverter parameter settings to be compared with the set values displayed in the Parameter Edit window. Any mismatch parameters detected in the comparison process will be displayed in a pop-up window.*3
Reset DeviceNet Communications Unit	When CX-Integrator is connected online, clicking the [Reset] button causes the DeviceNet communications to be hard reset. Note that this also causes the DeviceNet Communications Unit to be once disconnected from the network.
Reset edited data to default settings	Clicking the [Default Setup] button causes the edited parameter data in the Parameter Edit window to revert to the initial values. However, this operation does not affect the parameters stored in Inverters connected via DeviceNet.
Save edited data	When you finished editing data in the [Edit Device Parameters] screen, click [OK] and then save the project. This saves not only the project settings, but also the edited data.

*1 When the data was uploaded, the value of the parameter 0410 (Write to EEPROM) is 0.
When you download the parameter data next time, change this value to 2.
Otherwise, your changes will not be saved in the inverter EEPROM.

*2 The download process may be stopped if a problem occurs when downloading inverter parameters.
To be able to save the downloaded data into the inverter EEPROM, make sure that parameter 0410 (Write to EEPROM) is set to 2.

*3 Parameters with dXXX indicate monitor functions. These parameters cause no problem even if detected in the comparison process.

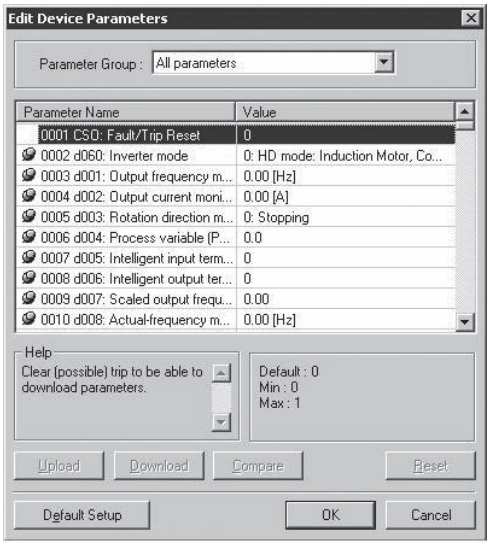

3-3-2 Restrictions of Edit Device Parameters Function with EDS File

[Edit Device Parameters] is a function accomplished by using the EDS file and Explicit Message functions defined in the DeviceNet Communications.
This means that, if an error occurs in sending/receiving an Explicit Message, [Edit Device Parameters] cannot function.
In particular, the upload/download function sends Explicit Messages in order of the parameters list in EDS files. An error affects significantly these functions to read and write inverter parameters.
If an error occurs in sending/receiving an Explicit Message, the upload/download process will be interrupted.
An error occurs due to environmental factors such as noise in the transmission path as well as due to the restrictions on inverter parameters as shown below.
If the upload/download process is interrupted, try to avoid the following causes.
If these are hardly unavoidable, change to editing parameters from CX-Drive according to the next section, *3-4 Editing Parameters with CX-Drive* on page 3-25.

Error Contents	Detailed Description
Error due to restrictions between parameters	Some inverter parameters put restrictions on other inverter parameters. These restrictions are shown in the next table (P.3-24). Change the parameter settings to avoid the restrictions. If this is not possible, edit the parameter settings from CX-Drive.
Parameter setting range error	The download process will be interrupted if the data contains a set value that exceeds the upper or lower limit of the parameter setting range. This occurs, for example, if the parameter setting range is set by another parameter. Check the restriction in the next table (P.3-24) and change the parameter setting accordingly. *1
Writing to a write-prohibit parameter.	The download process will be interrupted if you write a set value to a write-prohibit parameter.*1 Check if the following conditions exist and take corrective action. • Downloading while the inverter operates. • Soft Lock Selection (b031) is set to write-prohibit parameter.
Reading from a read-prohibit parameter.	When using the Light Load mode, some parameters are write-prohibited or read-only. Therefore, in the Light Load mode, you cannot use the [Edit Device Parameters] function. Always use CX-Drive to edit the inverter parameters.

Error Contents	Detailed Description
Set values are not stored in EEPROM.	In order to download parameters on the [Edit Device Parameters] screen, you need to set the last parameter Write to EEPROM to a correct value.*2 0: Recalculate motor parameters (Data not saved to EEPROM). 1: Store set values (Data saved to EEPROM). 2: Recalculate motor parameters and stores set values (Data saved to EEPROM).

*1 When using the Light Load mode, always edit the inverter parameters from CX-Drive.
The DeviceNet Communications Unit cannot be used in the High Frequency mode and the PM Motor mode.

*2 When the data was uploaded from an inverter, the value of the parameter Write to EEPROM is read as 0.
When downloading the parameter data next time, be sure to set the parameter value again.

Precautions for Correct Use

- To write the parameter data downloaded from the [Edit Device Parameters] screen (in CX-Integrator) to the inverter's EEPROM, make sure that the parameter Write to EEPROM is set to 1 or 2.
- When uploading parameters from an inverter on the [Edit Device Parameters] screen (in CX-Integrator), the value of the parameter Write to EEPROM is read as 0.
  When downloading the parameter data next time, be sure to set Write to EEPROM again.
- When downloading inverter parameters from the [Edit Device Parameters] screen, always check that the Remote I/O setting parameter P046 (Assembly Instance No.) is set correctly.
  If a different parameter setting is transferred, the number of words occupied by the DeviceNet Communications Unit will be changed, which affects the network configuration.
- When using the inverter in the Light Load mode, always edit the inverter parameters from CX-Drive.
- In the High Frequency mode and the PM Motor mode, the DeviceNet Communications Unit cannot be used.

Additional Information

The number displayed when the upload/download process is in progress is the parameter number for the parameter data being transferred. The parameter number is displayed to the left of each parameter data in the Parameter Edit window. You can identify which parameter caused abnormal termination from the number displayed when the upload/download process was terminated.

Restrictions between Parameters		
Multi-function Input Selection 1 to 8 (C001 to C008)	=	Multi-function Input Selection 1 to 8 (C001 to C008)*1
1st Frequency Upper Limit (A061)	>	1st Maximum Frequency (A004)
1st Frequency Lower Limit (A062)	>	1st Maximum Frequency (A004)
Output Frequency Setting (F001) 1st Multi-step Speed Reference 0 (A020)	>	1st Maximum Frequency (A004)
Output Frequency Setting (F001), 1st Multi-step Speed Reference 0 (A020)	>	1st Frequency Upper Limit (A061)
1st Frequency Lower Limit (A062)	>	Output Frequency Setting (F001), 1st Multi-step Speed Reference 0 (A020)
Starting Frequency (B082)	>	1st Frequency Upper Limit (A061)
Starting Frequency (B082)	>	1st Frequency Lower Limit (A062)
Starting Frequency (B082)	>	Output Frequency Setting (F001), 1st Multi-step Speed Reference 0 (A020)
Starting Frequency (B082)	>	Jogging Frequency (A038)
Output Frequency Setting (F001), 1st Multi-step Speed Reference 0 (A020)	=	Jump Frequency*1 (A063/A065/A067±A064/A066/A068)
Multi-step Speed Reference 1 to 15 (A021 to A035)	=	
Free V/f Frequency 7 (B112)	>	1st Frequency Upper Limit (A061)
Free V/f Frequency 7 (B112)	>	1st Frequency Lower Limit (A062)
Free V/f Frequency 7 (B112)	>	Output Frequency Setting (F001), 1st Multi-step Speed Reference 0 (A020)
2nd Frequency Upper Limit (A261)	>	2nd Maximum Frequency (A204)
2nd Frequency Lower Limit (A262)	>	2nd Maximum Frequency (A204)
Output Frequency Setting (F001), 2nd Multi-step Speed Reference 0 (A220)	>	2nd Maximum Frequency (A204)
Output Frequency Setting (F001), 2nd Multi-step Speed Reference 0 (A220)	>	2nd Frequency Upper Limit (A261)
2nd Frequency Lower Limit (A262)	>	Output Frequency Setting (F001), 2nd Multi-step Speed Reference 0 (A220)
Starting Frequency (B082)	>	2nd Frequency Upper Limit (A261)
Starting Frequency (B082)	>	2nd Frequency Lower Limit (A262)
Starting Frequency (B082)	>	Output Frequency Setting (F001), 2nd Multi-step Speed Reference 0 (A220)
Output Frequency Setting (F001), 2nd Multi-step Speed Reference 0 (A220)	=	Jump Frequency*2 (A063/a065/a067±a064/a066/a068)
Free V/f Frequency 7 (B112)	>	2nd Frequency Upper Limit (A261)
Free V/f Frequency 7 (B112)	>	2nd Frequency Lower Limit (A262)
Free V/f Frequency 7 (B112)	>	Output Frequency Setting (F001), 2nd Multi-step Speed Reference 0 (A220)

*1 The process will be terminated abnormally if the same set value exists in Multi-function input selection 1 to 8. The process will also be terminated abnormally if, when setting values in the order of Multi-function input selection 1 to 8, the value already set for a latter parameter is set for a preceding parameter.

*2 The process will be terminated if the frequency set for F001, A020, A220, or A021 to A035 is within the frequency range set for Jump frequency.

3-4 Editing Parameters with CX-Drive

The Inverter/Servo support tool CX-Drive is the support software to edit inverter parameters.
Installing the OMRON CX-One software simultaneously installs CX-Drive onto the PC.
CX-Drive enables you to connect your PC to the RJ45 or USB connector of an inverter to directly edit its parameters.
In addition, CX-Drive can be connected to the CS/CJ-series CPU Unit so that you can edit inverter parameters via DeviceNet communications. (This feature is supported in Ver.2.6 or higher.)
This section describes how to connect CX-Drive via DeviceNet to your inverter and provides a functional outline of CX-Drive.
For the functional details of CX-Drive, refer to the CX-Drive Operation Manual (Cat. No. W453).

3-4-1 Connecting CX-Drive (via DeviceNet)

There are two ways to connect CX-Drive to your inverter via DeviceNet.
In this section, the connection procedures for the these methods are described in the following order.

- Connecting to the inverter by registering its connection type
- Automatically detecting the connected inverter

Connecting to the Inverter by registering its connection type

In this method, you connect CX-Drive to your inverter after creating a new inverter project and setting its connection type.
Follow the steps below.

1 **Start CX-Drive and select [File] - [New] to create a new project.**

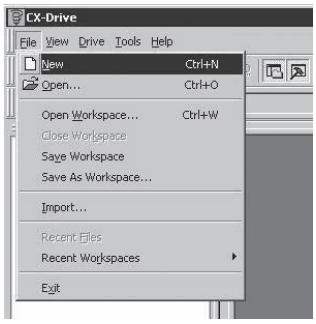

2 **In the New Drive window, select the Drive Type of the inverter and the Option Board Type.**

In the [Drive Type] section, select the inverter series and click the [Settings] button to the right.
In the Drive Type Settings window, select the Enclosure Rating, Voltage Class, and Maximum Motor Capacity and, in the Option Board Type section, select "DRT (DeviceNet Communications Unit)" as Option Boards.
After selecting, click the OK button to close the Drive Type Settings window.

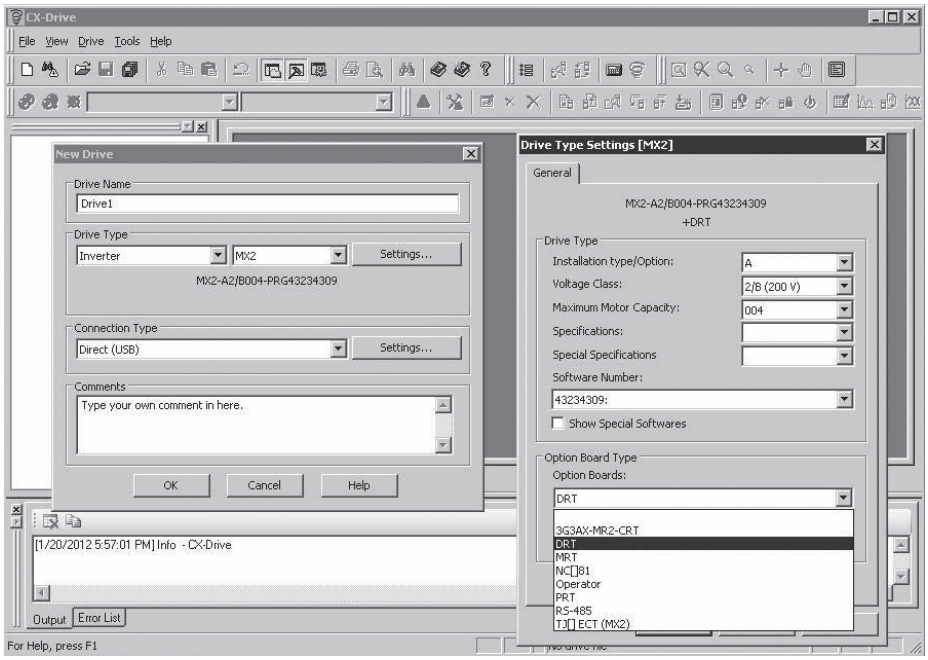

3 **Next, in the New Drive window, select the type of connection to the inverter.**

In the [Connection Type] section, select "Via PLC (DeviceNet)" and click the [Settings] button to the right.
In the [Network] tab, select each node address of the DeviceNet Master Unit and the inverter (DeviceNet Communications Unit).

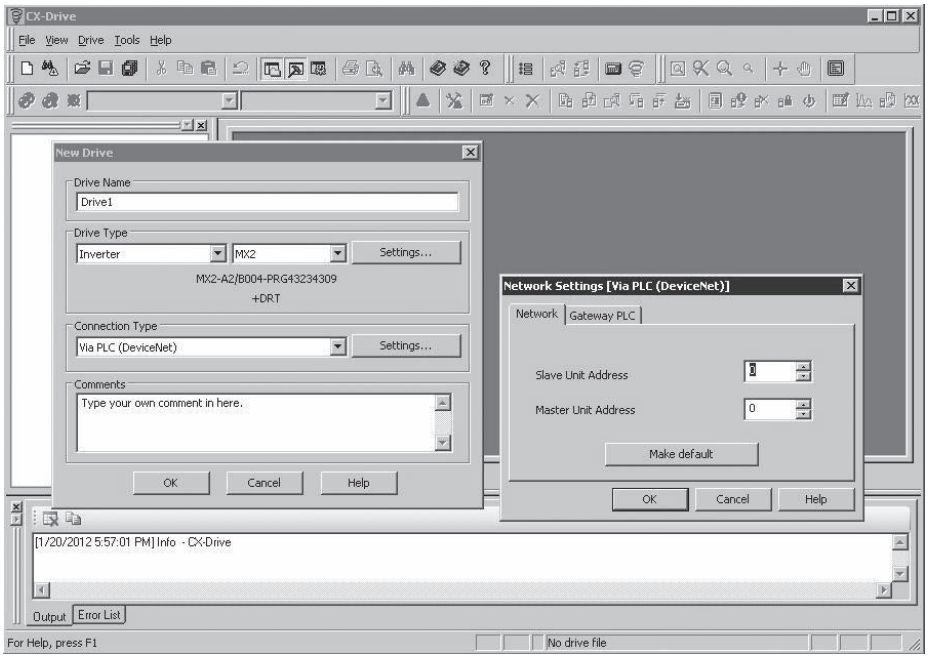

4 **Click the [Gateway PLC] tab and select the type of connection between CX-Drive and the CS/CJ-series CPU Unit.**

Click the [Properties] button and configure the following settings.

- Device Type: Select the model of the CPU Unit to which CX-Drive is connected.
- Network Type: Select the network via which CX-Drive is connected to the CPU Unit.

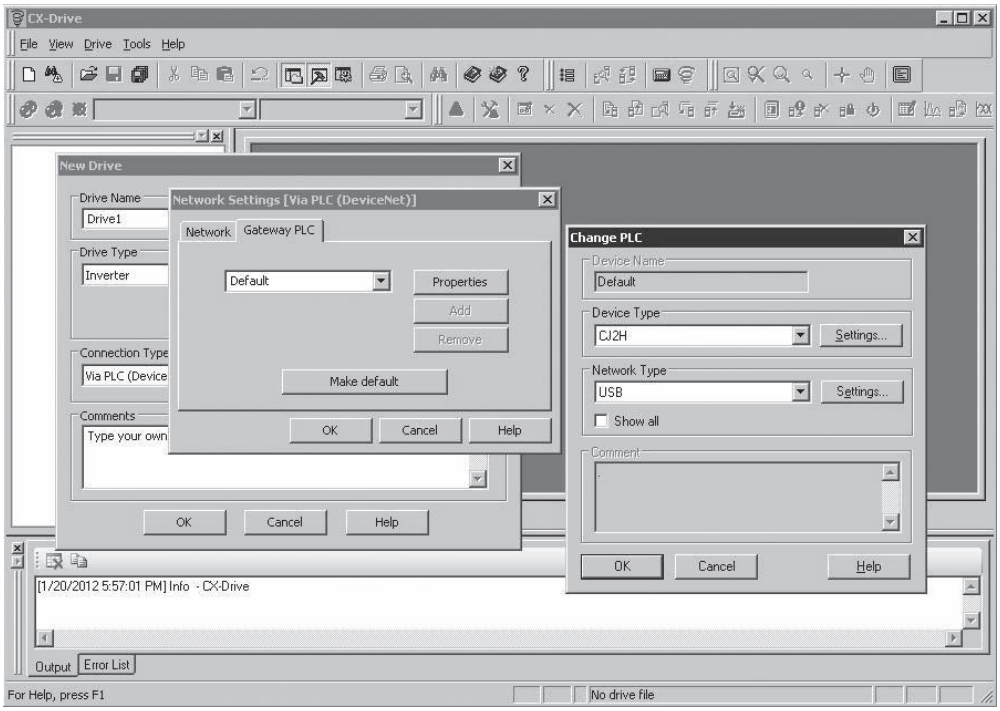

5 **When the above settings are done, use the [OK] button to close all the windows. A new project is registered in the workspace.**

You can now click the Work Online button [ ] to connect the inverter.

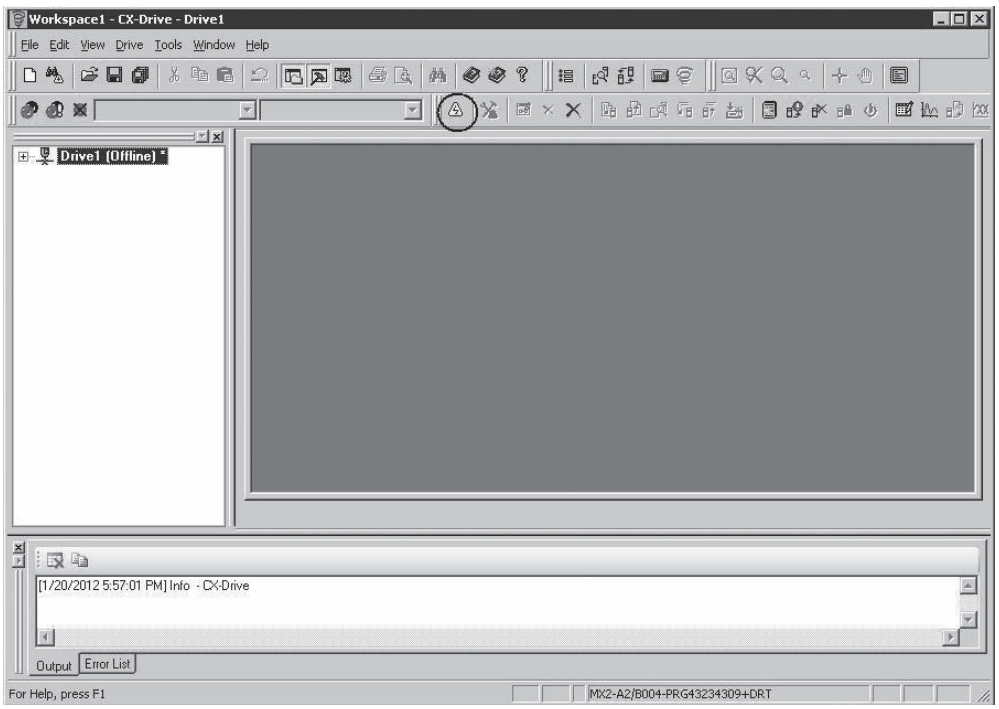

Automatically detecting the connected Inverter

In this method, you connect CX-Drive to your inverter using the Autodetect function after configuring the [Autodetect Options] in CX-Drive.
Follow the steps below.

1 **Start CX-Drive and select [Drive] - [Autodetect Options] to open the Options window.**

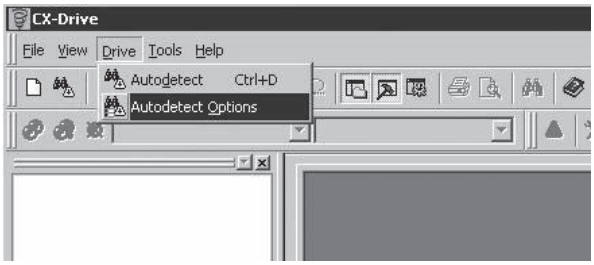

2 **In the [Autodetect] tab, in the [Drive Type Selection] section, select [Inverter] by clicking the [Inverter] check box.**
Then, in the [Connection Type Selection] section, select [Via PLC (DeviceNet)] by clicking the [Via PLC (DeviceNet)] check box. Next, click the [Advanced Options: Via PLC (DeviceNet)] to the right.

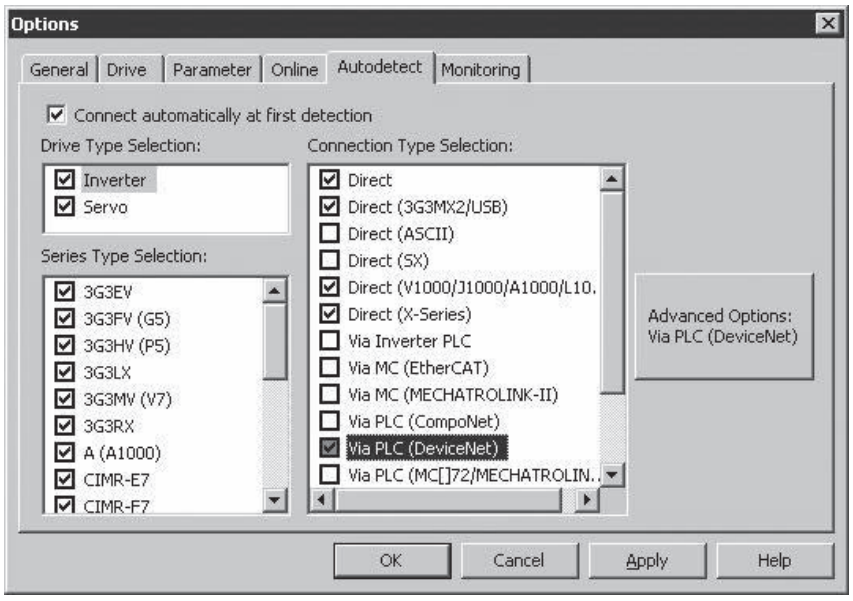

Additional Information

For quicker Autodetect operation, narrow down the scope of Auto detection by deselecting unnecessary check boxes.

3 **In the Advanced Options: [Via PLC (DeviceNet)] window, configure the following two settings.**

- DeviceNet node addresses: Select each node address of the DeviceNet Master Unit and the inverter (DeviceNet Communications Unit).
- [Gateway PLC]: Click the [Settings] button in the [Gateway PLC] section and select the Device Type and the Network Type.

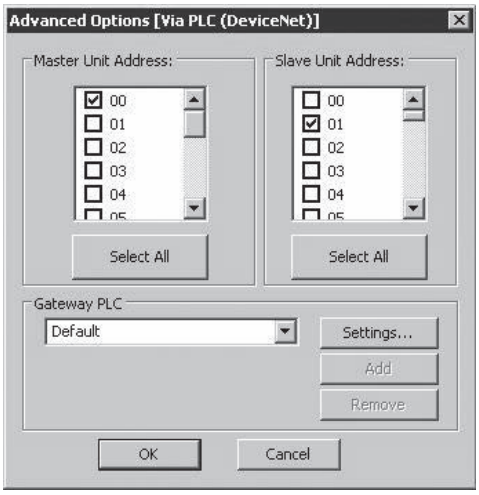

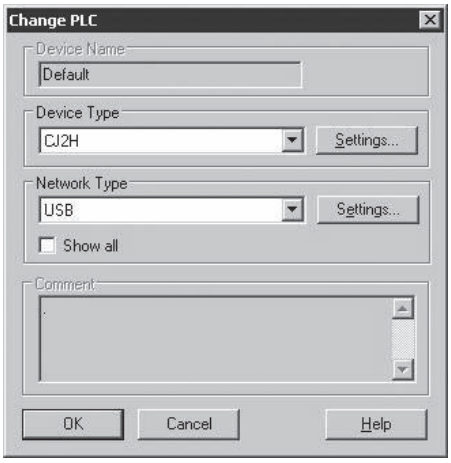

4 **When the above settings are done, use the [OK] button to close all the windows and click the [Autodetect] button.**

The Autodetection function starts to automatically create a new drive project.

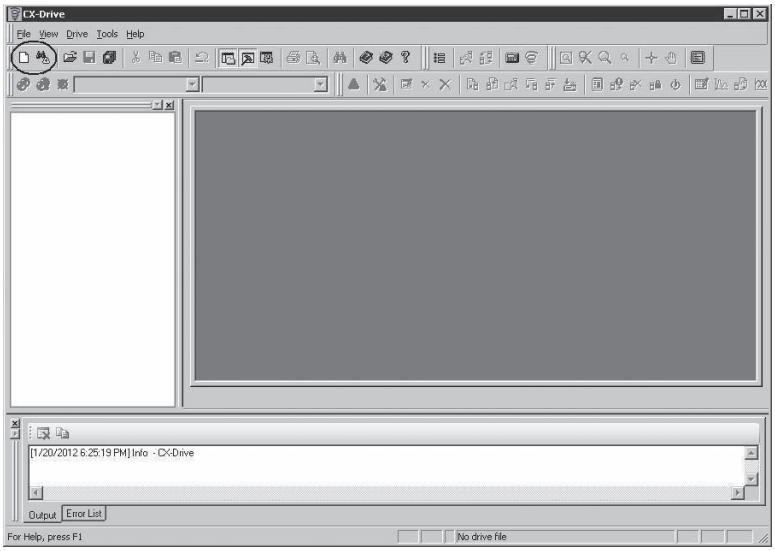

3-4-2 Outline of CX-Drive

The Inverter/Servo support tool CX-Drive enables you to edit inverter parameters and monitor the inverter status.
This section provides a functional outline of CX-Drive.

Screen Structure of CX-Drive

The screen structure of CX-Drive is shown below.
Registered drive projects are displayed in the workspace. Double-clicking a project displays the functions associated with it.
Double-clicking a function opens the window associated with the function.

Screen structure

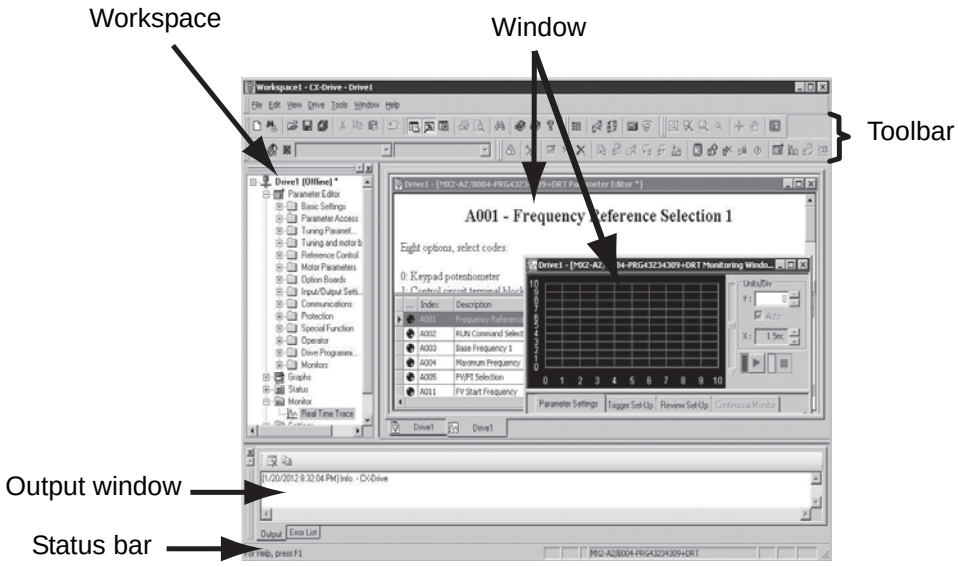

Precautions for Correct Use

CX-Drive, by default, does not allow connection to the inverter unless the software versions match.
- Software number of the iInverter set in the CX-Drive project
- Software number of the inverter actually connected

If you cannot connect to the inverter due to a software number mismatch, select [Tools] - [Options] in the menu bar and, in the [Online] tab, deselect the [Check Drive Software Compatibility] check box. This allows CX-Drive to connect to the inverter operate normally, although a warning will appear.
To match the software numbers, right-click the project, select [Properties], and click the [Settings] button in the [Drive Type] section. In the Drive Type Settings window, set the Software Number that matches that of the inverter. If you cannot find the applicable software number in the CX-Drive's Software Number list, please upgrade the CX-Drive version.

Editing Device Parameters Using CX-Drive

Double-clicking Parameter Editor in the project opens a window in which all inverter parameters are listed (in ascending order).

You can edit inverter parameters in this window.

To upload/download inverter parameters, use the Transfer buttons in the toolbar.

- Double-click one of the folders under Parameter Editor to narrow down the parameter list to only those parameters associated with it.
- Edit the value set for each parameter in the Value field of the parameter list.
- When a parameter is selected, the explanation of that parameter is displayed in the upper area.
- At the left end of the parameter list, the state of each parameter value is displayed. You can display only the parameters in the same state. A parameter is in one of the three states: Not default, Different from the inverter, or Invalid.
- You can selectively transfer only the required parameter(s) to the inverter.

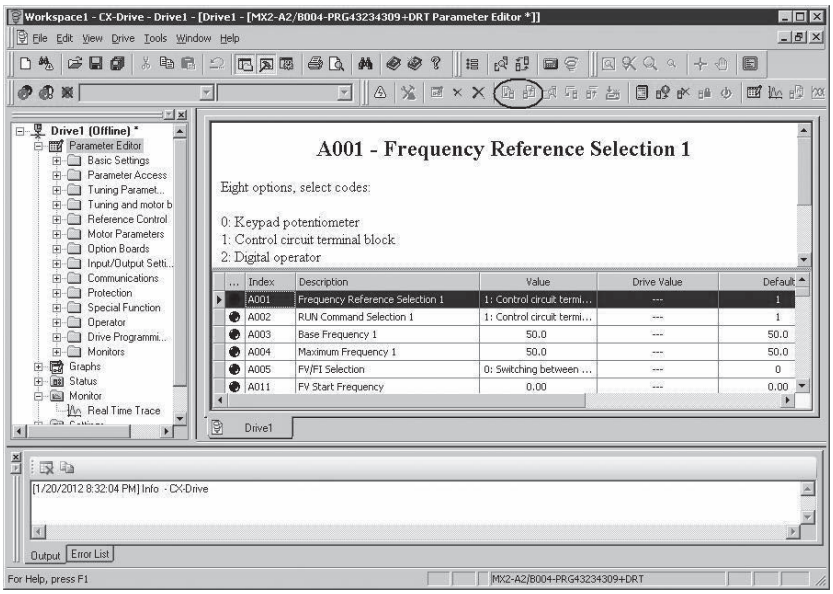

Status Function of CX-Drive

Open the Status folder in the project and double-click the status information.
The window corresponding to the selected status information opens.

- Digital Inputs: Displays the current ON/OFF status of digital inputs, including the input settings of the connected inverter.
- Digital Outputs: Displays the current ON/OFF status of digital outputs, including the output settings of the connected inverter.
- Inverter Status (Drive Status 1 and Drive Status 12): Displays the status values of dxxx in the inverter.
- Alarms: Displays the log of the current and past alarms.

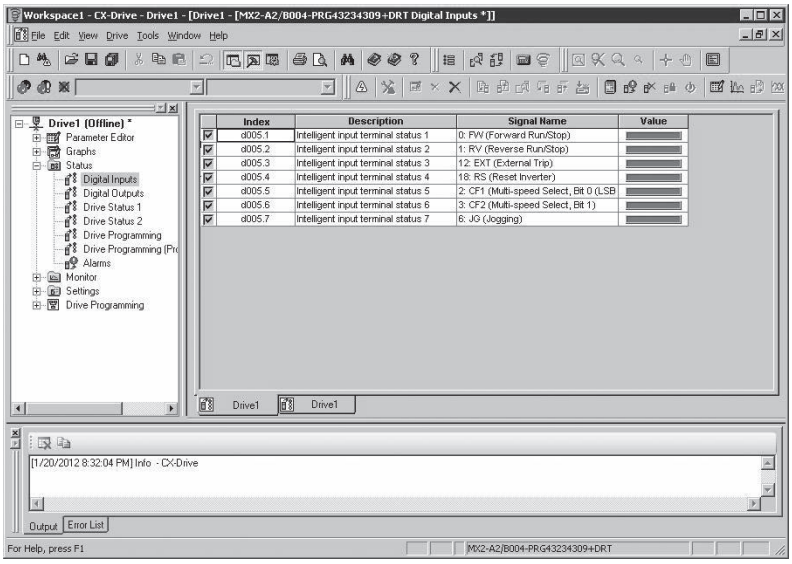

Monitor Function of CX-Drive

Open the Monitor folder in the project and double-click Real Time Trace.
The Real Time Trance window opens, in which you can monitor the operation status of the inverter.

- A maximum of seven signals can be traced.
- The ON/OFF timing of the inverter Status or a value can be set as a trigger.

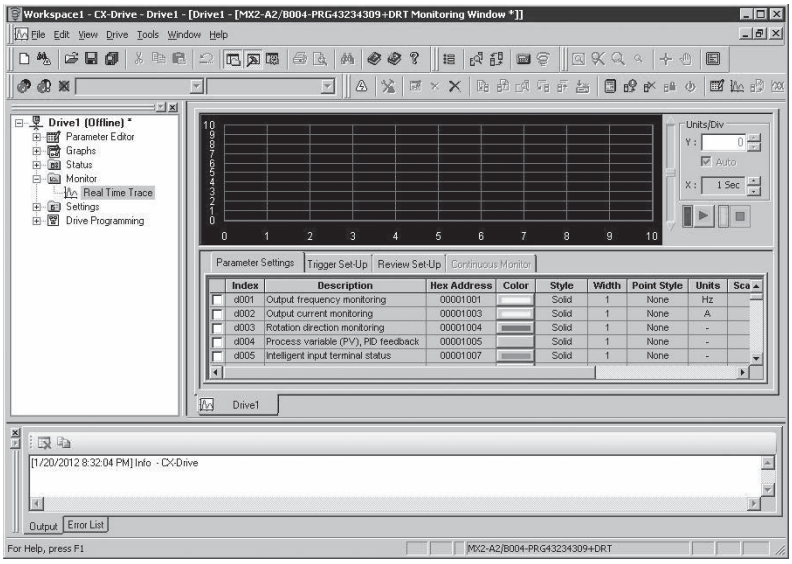

4

Remote I/O

This section describes the functions of Remote I/O.

4-1 Remote I/O Configuration 4-2
4-1-1 Remote I/O Types 4-2
4-1-2 Remote I/O Selection 4-3

4-2 Basic and Extended Speed I/O 4-4
4-2-1 Basic Speed I/O (20/70) 4-4
4-2-2 Extended Speed I/O (21/71) 4-5
4-2-3 Extended Speed and Acceleration Control (110/111) 4-7

4-3 Remote I/O with Torque Reference Support 4-10
4-3-1 Torque Control Configuration 4-10
4-3-2 Extended Speed and Torque Control (123/173) 4-11
4-3-3 Extended Control I/O (101/151/153) 4-13
4-3-4 Extended Control I/O and Multi function I/O Monitor (101/153) 4-15

4-4 Special I/O and Flexible Format 4-17
4-4-1 Frequency Reference/RUN Command Selection 4-17
4-4-2 Special I/O (100/150) 4-17
4-4-3 Flexible Format (139/159) 4-20

4-5 When to Input the RUN Command after Establishment of Communications 4-22

4-1 Remote I/O Configuration

4-1-1 Remote I/O Types

There are eight types of Remote I/O as described below. You can use the appropriate Remote I/O type for your application.

Type	Description
Basic Speed I/O	Remote I/O included as standard for DeviceNet communications. This Remote I/O offers limited functions.
Extended Speed I/O	Remote I/O included as standard for DeviceNet communications. This Remote I/O offers general inverter control functions.
Extended Speed and Acceleration Control	OMRON's unique Remote I/O not defined in the DeviceNet specifications. This is the Extended Speed I/O with an additional Acceleration/Deceleration Time setting function.
Extended Speed and Torque Control	OMRON's unique Remote I/O not defined in the DeviceNet specifications. This is the Extended Speed I/O with an additional Torque Reference function.
Extended Control I/O	OMRON's unique Remote I/O not defined in the DeviceNet specifications. This Remote I/O is optimized for the input/output function of Inverters. You can select the desired input/output function by setting a multi-function input/output parameter.
Extended Control I/O and Multi function I/O Monitor	OMRON's unique Remote I/O not defined in the DeviceNet specifications. This is the Extended Control I/O function with an additional Multi-function Input Monitor function. You can use this Remote I/O as general-purpose host inputs by configuring the multi-function inputs (C001 to C009).
Special I/O	OMRON's unique Remote I/O not defined in the DeviceNet specifications. This Remote I/O enables access to inverter's internal parameter areas via Modbus communication.
Flexible Format	OMRON's unique Remote I/O not defined in the DeviceNet specifications. This Remote I/O enables more than one data including those in inverter's internal parameter areas to be allocated via Modbus communication. You can select the data to be allocated using parameters P160 to P179.

4-1-2 Remote I/O Selection

Select and set the appropriate type of Remote I/O for your application in parameter P046.

Parameter	Description	Setting	Assembly No. (hex)		No. of occupied bytes (No. of words)	
			Output	Input	Output	Input
P046	Assembly Instance No.	00: Basic Speed I/O	20	70	4(2)	4(2)
		01: Extended Speed I/O (Default)	21	71	4(2)	4(2)
		02: Extended Speed and Torque Control	123	173	6(3)	6(3)
		03: Special I/O*1	100	150	8(4)	8(4)
		04: Extended Control I/O	101	151	8(4)	8(4)
		05: Extended Control I/O and Multi function I/O Monitor	101	153	8(4)	9(4.5)
		06: Flexible Format	139	159	20(10)*2	20(10)*2
		07: Extended Speed and Acceleration Control	110	111	8(4)	8(4)

*1 Special I/O differs from the conventional Advanced Remote I/O in the data format.

*2 In Flexible Format, the number of occupied bytes changes depending on the number of allocated Modbus registers.

Precautions for Correct Use

- During network connection, the Remote I/O is not updated even if parameter P046 is changed. To update the Remote I/O setting, cycle the inverter's input power supply.
- Using the DeviceNet Communications Unit disables the inverter's Modbus communication function. Do not connect the communications cable to Modbus interface.

Additional Information

The DeviceNet Communications Unit supports read/write of double-word data. Refer to *4-4-2 Special I/O (100/150)* on page 4-17.

4-2 Basic and Extended Speed I/O

4-2-1 Basic Speed I/O (20/70)

Basic Speed I/O is a type of Remote I/O included as standard for DeviceNet communications. This Remote I/O offers more limited functions than Extended Speed I/O.

Basic Remote Output Assembly ID: 20 Dec (14 hex)

● **Output Format (CS/CJ-series → Inverter)**

Word No.	Byte No.	Bit Allocation							
		bit 7	bit 6	bit 5	bit 4	bit 3	bit 2	bit 1	bit 0
n	0	–	–	–	–	–	RS	–	FW
	1	–	–	–	–	–	–	–	–
n + 1	2	Rotation Speed Reference (Low byte)							
	3	Rotation Speed Reference (High byte)							

● **Output Bit/Data Details**

Name		Description
FW	Forward/Stop	0: Stop 1: Forward
RS	Reset	0: – 1: Fault reset
Rotation Speed Reference		If parameter P049 (Number of Poles for Rotation Speed Setting) is set appropriately, the rotational speed unit is [min^{-1}]. If parameter P049 (Number of Poles for Rotation Speed Setting) is set to 0, the frequency unit is [0.01 Hz].

Precautions for Safe Use

For safety reasons, the FWD, RV, and RS command must be output after the cause of fault/trip is removed.

Basic Remote Input Assembly ID: 70 Dec (46 hex)

● **Input Format (CS/CJ-series ← Inverter)**

Word No.	Byte No.	Bit Allocation							
		bit 7	bit 6	bit 5	bit 4	bit 3	bit 2	bit 1	bit 0
n	0	–	–	–	–	–	FWR	–	AL
	1	–	–	–	–	–	–	–	–
n + 1	2	Rotation Speed Monitor (Low byte)							
	3	Rotation Speed Monitor (High byte)							

● Input Bit/Data Details

Name		Description
AL	Alarm output	0: Normal 1: Fault/Trip
FWR	During forward operation	0: During reverse run/Stopping 1: During forward run
Rotation Speed Monitor		If parameter P049 (Number of Poles for Rotation Speed Setting) is set appropriately, the rotational speed unit is [min^{-1}]. If parameter P049 (Number of Poles for Rotation Speed Setting) is set to 0, the frequency is monitored in units of [0.01 Hz].

4-2-2 Extended Speed I/O (21/71)

Standard I/O is a type of Remote I/O included as standard for DeviceNet communications.
This Remote I/O offers general inverter control functions.

Standard Remote Output Assembly ID: 21 Dec (15 hex)

● Output Format (CS/CJ-series → Inverter)

Word No.	Byte No.	Bit Allocation							
		bit 7	bit 6	bit 5	bit 4	bit 3	bit 2	bit 1	bit 0
n	0	–	REF	CTR	–	–	RS	RV	FW
	1	–	–	–	–	–	–	–	–
n + 1	2	Rotation Speed Reference (Low byte)							
	3	Rotation Speed Reference (High byte)							

● Output Bit/Data Details

Name		Description
FW	Forward/Stop	0: Stop 1: Forward
RV	Reverse/Stop	0: Stop 1: Reverse
RS	Reset	0: – 1: Fault reset
CTR	Net Ctrl.	0: Follow the setting of parameter A002. 1: Follow the reference from network control.
REF	Net Ref.	0: Follow the setting of parameter A001. 1: Follow the reference from network control.
Rotation Speed Reference		If parameter P049 (Number of Poles for Rotation Speed Setting) is set appropriately, the rotational speed unit is [min^{-1}]. If parameter P049 (Number of Poles for Rotation Speed Setting) is set to 0, the frequency unit is [0.01 Hz].

Precautions for Safe Use

For safety reasons, the FWD, RV, and RS command must be output after the cause of fault/trip is removed.

Standard Remote Input Assembly ID: 71 Dec (47 hex)

● Input Format (CS/CJ-series ← Inverter)

Word No.	Byte No.	Bit Allocation							
		bit 7	bit 6	bit 5	bit 4	bit 3	bit 2	bit 1	bit 0
n	0	FA1	RFN	CFN	IRDY	RVR	FWR	WR	AL
	1	Drive Status							
n + 1	2	Rotation Speed Monitor (Low byte)							
	3	Rotation Speed Monitor (High byte)							

● Input Bit/Data Details

Name		Description
AL	Alarm output	0: Normal 1: Fault/Trip
WR	Warning	0: Normal 1: Warning
FWR	During forward operation	0: During reverse run/Stopping 1: During forward run
RVR	During reverse operation	0: During forward run/Stopping 1: During reverse run
IRDY	Operation ready	0: Not ready 1: Ready
CFN	Ctrl. from Net	0: Follow the setting of parameter A002. 1: DeviceNet reference
RFN	Ref. from Net	0: Follow the setting of parameter A001. 1: DeviceNet reference
FA1	Constant speed reached	0: Accelerating or decelerating/Stopping 1: Frequency agree
Drive Status		1: Startup 2: Not ready 3: Ready 4: Operation in progress 5: Stopping 6: Fault/Trip stop 7: Fault/Trip
Rotation Speed Monitor		If parameter P049 (Number of Poles for Rotation Speed Setting) is set appropriately, the rotational speed unit is [min^{-1}]. If parameter P049 (Number of Poles for Rotation Speed Setting) is set to 0, the frequency is monitored in units of [0.01 Hz].

4-2-3 Extended Speed and Acceleration Control (110/111)

Extended Speed and Acceleration Control is OMRON's unique Remote I/O not defined in the DeviceNet specifications.
This is the Extended Speed I/O with an additional Acceleration/Deceleration Time setting function.

Extended Speed and Acceleration Control Assembly ID: 110 Dec (6E hex)

● Output Format (CS/CJ-series → Inverter)

Word No.	Byte No.	Bit Allocation							
		bit 7	bit 6	bit 5	bit 4	bit 3	bit 2	bit 1	bit 0
n	0	–	REF	CTR	–	FRS	RS	RV	FW
	1	–	–	–	–	–	–	–	–
n + 1	2	Rotation Speed Reference (Low byte)							
	3	Rotation Speed Reference (High byte)							
n + 2	4	Acceleration Time (Low byte)							
	5	Acceleration Time (High byte)							
n + 3	6	Deceleration Time (Low byte)							
	7	Deceleration Time (High byte)							

● Output Bit/Data Details

Name		Description
FW	Forward/Stop	0: Stop 1: Forward
RV	Reverse/Stop	0: Stop 1: Reverse
RS	Reset	0: – 1: Fault reset
FRS	Free-run stop	0: Ignore 1: Free-run stop
CTR	Net Ctrl.	0: Follow the setting of parameter A002. 1: Follow the reference from network control.
REF	Net Ref.	0: Rotation Speed Reference follows the setting of parameter A001; Acceleration/Deceleration Time follows the setting of parameter F002/F003. 1: Follow the reference from network control.
Rotation Speed Reference		If parameter P049 (Number of Poles for Rotation Speed Setting) is set appropriately, the rotational speed unit is [min^{-1}]. If parameter P049 (Number of Poles for Rotation Speed Setting) is set to 0, the frequency unit is [0.01 Hz].
Acceleration Time		Reference acceleration time. Unit: [0.1 s], Setting range: [0.1 to 3600.0] The set value must be within this setting range. If REF (Net.Ref.) is set to 0, the setting of parameter F002 is enabled.
Deceleration Time		Reference deceleration time. Unit: [0.1 s], Setting range: [0.1 to 3600.0] The set value must be within this setting range. If REF (Net.Ref.) is set to 0, the setting of parameter F003 is enabled.

Precautions for Safe Use

For safety reasons, the FWD, RV, and RS command must be output after the cause of fault/trip is removed.

Extended Speed and Acceleration Control Assembly ID: 111 Dec (6F hex)

● Input Format (CS/CJ-series ← Inverter)

Word No.	Byte No.	Bit Allocation							
		bit 7	bit 6	bit 5	bit 4	bit 3	bit 2	bit 1	bit 0
n	0	MI3	MI2	MI1	FA1	–	AL	RVR	FWR
	1	Drive Status Detail							
n + 1	2	Rotation Speed Monitor (Low byte)							
	3	Rotation Speed Monitor (High byte)							
n + 2	4	Output Current Monitor (Low byte)							
	5	Output Current Monitor (High byte)							
n + 3	6	Trip Cause							
	7	RFN	CFN	FWT	M18	MI7	MI6	MI5	MI4

● Input Bit/Data Details

Name		Description
FWR	During forward operation	0: During reverse run/Stopping 1: During forward run
RVR	During reverse operation	0: During forward run/Stopping 1: During reverse run
AL	Alarm output	0: Normal 1: Fault/Trip
FA1	Constant speed reached	0: Accelerating or decelerating 1: Frequency agree
MI1 to MI7	Multi-function Input Monitor	Monitors multi function inputs S1 to S7 0: OFF 1: ON
MI8 RX	Multi-function Input Monitor	Monitors multi function inputs S8 0: OFF 1: ON
CFN	Ctrl. from Net	0: Rotation Speed Reference follows the setting of parameter A001; Acceleration/Deceleration Time follows the setting of parameter F002/F003. 1: DeviceNet reference
RFN	Ref. from Net	0: Follow the setting of parameter A001. 1: DeviceNet reference
FWT RX	Forward Rotation Terminal Input Monitor	Monitors the forward rotation command terminal state. 0: OFF 1: ON

Name	Description
Drive Status Detail	0 : Stopping 1 : Running 2 : Jogging 3 : Free running 4 : Direct current DC braking 5 : Restart (Retry)/Error detection (Deceleration stop) 7 : Restart (Retry) in process 8 : Waiting for restart (retry) 10 : Fault/Trip 11 : Undervoltage condition
Rotation Speed Monitor	If parameter P049 (Number of Poles for Rotation Speed Setting) is set appropriately, the rotational speed unit is [min^{-1}]. If parameter P049 (Number of Poles for Rotation Speed Setting) is set to 0, the frequency is monitored in units of [0.01 Hz].
Output Current Monitor	Unit: [0.1 A]
Trip Cause	Displays direct trip cause. Decimal values 1 to 99 correspond to trips E01 to E99.

4-3 Remote I/O with Torque Reference Support

4-3-1 Torque Control Configuration

The type of Remote I/O described in this section provides the torque reference for torque control function, in addition to normal inverter speed control.
The Remote I/O functions described here can be used without the use of torque control. In this case, the input/output function related to torque control is disabled.

Precautions for Correct Use

If the inverter is set to the Light Load mode, torque reference input is prohibited and therefore you cannot use Remote I/O with the torque reference enabled. Use another type of Remote I/O.

Torque Control Configuration Steps

To use torque control, the inverter must operate under vector control. Follow the steps below to enable torque control.

1 **Select the vector control.**
Enable Vector Control by setting parameter A044 (1st Control Method) according to the MX2/RX-series Inverter User's Manual.

2 **Perform auto-tuning of the motor.**
Perform auto-tuning of the motor parameters on the connected motor according to the MX2/RX-series Inverter User's Manual. After auto-tuning, save the motor parameters into inverter.

3 **Configure the torque control.**
Configure the torque control function according to the MX2/RX-series Inverter User's Manual.

4 **Configure DeviceNet.**
Configure the DeviceNet parameters according to *3-1-2 Remote I/O Settings Using Torque Reference* on page 3-6.

5 **Configure the multi-function input to enable torque control.**
To enable torque control,you must set the Multi-function Input (C001 to C008) to 52 (Torque reference input permission) and turn it ON.
Turn ON the multi-function input configured via an external terminal or DeviceNet Remote I/O.

Additional Information

For details about torque control, refer to Section 5-11 Torque Control of the MX2 User's Manual (Cat. No. I570) and Section 6-9 Torque Control of the RX User's Manual (Cat. No. I578).

Disabling Torque Control

Torque control is disabled unless the multi-function input is set to 52 (Torque reference input permission). Configuration of parameters related to torque control is unnecessary if toque control is disabled.

4-3-2 Extended Speed and Torque Control (123/173)

Extended Speed and Torque Control is OMRON's unique Remote I/O not defined in the DeviceNet specifications.
This is the Extended Speed I/O with an additional Torque Reference function.

Extended Speed and Torque Control Output Assembly ID: 123 Dec (7B hex)

● Output Format (CS1/CJ1-series → Inverter)

Word No.	Byte No.	Bit Allocation							
		bit 7	bit 6	bit 5	bit 4	bit 3	bit 2	bit 1	bit 0
n	0	–	REF	CTR	–	–	RS	RV	FW
	1	–	–	–	–	–	–	–	–
n + 1	2	Rotation Speed Reference (Low byte)							
	3	Rotation Speed Reference (High byte)							
n + 2	4	Torque Reference (Low byte)							
	5	Torque Reference (High byte)							

● Output Bit/Data Details

Name		Description
FW	Forward/Stop	0: Stop 1: Forward
RV	Reverse/Stop	0: Stop 1: Reverse
RS	Reset	0: – 1: Fault reset
CTR	Net Ctrl.	0: Follow the setting of parameter A002. 1: Follow the reference from network control.
REF	Net Ref.	0: Follow the setting of parameter A001. 1: Follow the reference from network control.
Rotation Speed Reference		If parameter P049 (Number of Poles for Rotation Speed Setting) is set appropriately, the rotational speed unit is [min^{-1}]. If parameter P049 (Number of Poles for Rotation Speed Setting) is set to 0, the frequency is monitored in units of [0.01 Hz].
Torque Reference		Reference torque. Unit: [%]

Precautions for Safe Use

For safety reasons, the FWD, RV, and RS command must be output after the cause of fault/trip is removed.

Extended Speed and Torque Control Input Assembly ID: 173 Dec (AD hex)

● Input Format (CS1/CJ1-series ← Inverter)

Word No.	Byte No.	Bit Allocation							
		bit 7	bit 6	bit 5	bit 4	bit 3	bit 2	bit 1	bit 0
n	0	FA1	RFN	CFN	IRDY	RVR	FWR	WR	AL
	1	Drive Status							
n + 1	2	Rotation Speed Monitor (Low byte)							
	3	Rotation Speed Monitor (High byte)							
n + 2	4	Torque Actual (Low byte)							
	5	Torque Actual (High byte)							

● Input Bit/Data Details

Name		Description
AL	Alarm output	0: Normal 1: Fault/Trip
WR	Warning	0: Normal 1: Warning
FWR	During forward operation	0: During reverse run/Stopping 1: During forward run
RVR	During reverse operation	0: During forward run/Stopping 1: During reverse run
IRDY	Operation ready	0: Not ready 1: Ready
CFN	Ctrl. from Net	0: Follow the setting of parameter A002. 1: DeviceNet reference
RFN	Ref. from Net	0: Follow the setting of parameter A001. 1: DeviceNet reference
FA1	Constant speed reached	0: Accelerating or decelerating/Stopping 1: Frequency agree
Drive Status		1: Startup 2: Not ready 3: Ready 4: Operation in progress 5: Stopping 6: Fault/Trip stop 7: Fault/Trip
Rotation Speed Monitor		If parameter P049 (Number of Poles for Rotation Speed Setting) is set appropriately, the rotational speed unit is [min^{-1}]. If parameter P049 (Number of Poles for Rotation Speed Setting) is set to 0, the frequency is monitored in units of [0.01 Hz].
Torque Actual		Actual torque monitor. Unit: [%]

4-3-3 Extended Control I/O (101/151/153)

Extended Control I/O is OMRON's unique Remote I/O not defined in the DeviceNet specifications. This type of Remote I/O is optimized for the input/output function of Inverters, allowing you to select each input/output function by setting a multi-function input/output parameter.

Extended Control I/O Output Assembly ID: 101 Dec (65 hex)

● Output Format (CS1/CJ1-series → Inverter)

Word No.	Byte No.	Bit Allocation							
		bit 7	bit 6	bit 5	bit 4	bit 3	bit 2	bit 1	bit 0
n	0	CI8	CI7	CI6	CI5	CI4	CI3	RV	FW
	1	CO2	CO1	CR	CO5	CO4	CO3	RS	EXT
n + 1	2	Rotation Speed Reference (Low byte)							
	3	Rotation Speed Reference (High byte)							
n + 2	4	Torque Reference (Low byte)							
	5	Torque Reference (High byte)							
n + 3	6	Torque Compensation Bias (Low byte)							
	7	Torque Compensation Bias (High byte)							

● Output Bit/Data Details

Name		Description
FW	Forward/Stop	0: Stop 1: Forward
RV	Reverse/Stop	0: Stop 1: Reverse
CI3 to CI7	Multi-function Input	Follows the setting of each multi-function input (C003 to C008). 0: OFF 1: ON
CI8 RX	Multi-function input [8]	Follows the setting of each multi-function input (C003 to C008). 0: OFF 1: ON
EXT	External trip	0: – 1: External fault
RS	Reset	0: – 1: Fault reset
CR	Multi-function Contact Output	If a multi-function output (C021 to C026) is set to 63 (OPO: Option Board), you can control the corresponding inverter multi-function output. 0: OFF 1: ON
CO1, CO2	Multi-function Output	
CO3 to CO5 RX	Multi-function Output	If a multi-function output (C021 to C026) is set to 63 (OPO: Option Board), you can control the corresponding inverter multi-function output. 0: OFF 1: ON

Name	Description
Rotation Speed Reference	If parameter P049 (Number of Poles for Rotation Speed Setting) is set appropriately, the rotational speed unit is [min^{-1}]. If parameter P049 (Number of Poles for Rotation Speed Setting) is set to 0, the frequency is monitored in units of [0.01 Hz].
Torque Reference	Reference torque: Unit: [%]
Torque Compensation Bias	Compensation bias torque. Unit: [%]

Precautions for Safe Use

For safety reasons, the FWD, RV, and RS command must be output after the cause of fault/trip is removed.

Extended Control I/O Input Assembly ID: 151 Dec (97 hex)

● Input Format (CS1/CJ1-series ← Inverter)

Word No.	Byte No.	Bit Allocation							
		bit 7	bit 6	bit 5	bit 4	bit 3	bit 2	bit 1	bit 0
n	0	AL	WR	IRDY	FA1	–	RVR	ZS	FWR
	1	MO4	MO3	MO2	MO1	MR	CFN	–	–
n + 1	2	Rotation Speed Monitor (Low byte)							
	3	Rotation Speed Monitor (High byte)							
n + 2	4	Torque Actual (Low byte)							
	5	Torque Actual (High byte)							
n + 3	6	Output Current Monitor (Low byte)							
	7	Output Current Monitor (High byte)							

● Input Bit/Data Details

Name		Description
FWR	During forward operation	0: During reverse run/Stopping 1: During forward run
ZS	0 Hz	0: At non-zero speed 1: At zero speed
RVR	During reverse operation	0: During forward run/Stopping 1: During reverse run
FA1	Constant speed reached	0: Accelerating or decelerating/Stopping 1: Frequency agree
IRDY	Operation ready	0: Not ready 1: Ready
WR	Warning	0: Normal 1: Warning
AL	Alarm output	0: Normal 1: Fault/Trip
CFN	Ctrl. from Net	0: Follow the setting of parameter A002. 1: DeviceNet reference
MO1, MO2, MR	Multi-function (Contact) Output	Follows the setting of each multi-function input (C021 to C026). 0: OFF 1: ON

Name		Description
MO3, MO4 RX	Multi-function Output	Follows the setting of each multi-function input (C021 to C026). 0: OFF 1: ON
Rotation Speed Monitor		If parameter P049 (Number of Poles for Rotation Speed Setting) is set appropriately, the rotational speed unit is [min^{-1}]. If parameter P049 (Number of Poles for Rotation Speed Setting) is set to 0, the frequency is monitored in units of [0.01 Hz].
Torque Actual		Actual torque monitor. Unit: [%]
Output Current Monitor		Unit: [0.1 A]

4-3-4 Extended Control I/O and Multi function I/O Monitor (101/153)

This is the Extended Control I/O function with an additional Multi-function Input Monitor function.
The output format (CS/CJ series → Inverter) is the same as that of Extended Control I/O. The input format (CS/CJ series ← Inverter) is as shown below.

Extended Control I/O and Multi function I/O Monitor Assembly ID: 153 Dec (99 hex)

● Input Format (CS1/CJ1-series ← Inverter)

Word No.	Byte No.	Bit Allocation							
		bit 7	bit 6	bit 5	bit 4	bit 3	bit 2	bit 1	bit 0
n	0	AL	WR	IRDY	FA1	–	RVR	ZS	FWR
	1	MO4	MO3	MO2	MO1	MR	CFN	–	–
n + 1	2	Rotation Speed Monitor (Low byte)							
	3	Rotation Speed Monitor (High byte)							
n + 2	4	Torque Actual (Low byte)							
	5	Torque Actual (High byte)							
n + 3	6	Output Current Monitor (Low byte)							
	7	Output Current Monitor (High byte)							
n + 4	8	MI8	MI7	MI6	MI5	MI4	MI3	MI2	MI1

● Input Bit/Data Details

Name		Description
FWR	During forward operation	0: During reverse run/Stopping 1: During forward run
ZS	0 Hz	0: At non-zero speed 1: At zero speed
RVR	During reverse operation	0: During forward run/Stopping 1: During reverse run
FA1	Constant speed reached	0: Accelerating or decelerating/Stopping 1: Frequency agree
IRDY	Operation ready	0: Not ready 1: Ready
WR	Warning	0: Normal 1: Warning

Name		Description
AL	Alarm output	0: Normal 1: Fault/Trip
CFN	Ctrl. from Net	0: Follow the setting of parameter A002. 1: DeviceNet reference
MO1, MO2, MR	Multi-function (Contact) Output	Follows the setting of each multi-function input (C021 to C026). 0: OFF 1: ON
MO3, MO4 RX	Multi-function Output	Follows the setting of each multi-function input (C021 to C026). 0: OFF 1: ON
Rotation Speed Monitor		If parameter P049 (Number of Poles for Rotation Speed Setting) is set appropriately, the rotational speed unit is [min^{-1}]. If parameter P049 (Number of Poles for Rotation Speed Setting) is set to 0, the frequency is monitored in units of [0.01 Hz].
Torque Actual		Actual torque monitor. Unit: [%]
Output Current Monitor		Unit: [0.1 A]
MI1 to MI7	Multi-function Input	Follows the setting of each multi-function input (C001 to C008). By setting these parameters to 255 (No allocation), you can use the inverter's multi-function inputs as general-purpose host inputs. 0: OFF 1: ON
MI8 RX	Multi-function Input	Follows the setting of each multi-function input (C001 to C008). By setting these parameters to 255 (No allocation), you can use the inverter's multi-function inputs as general-purpose host inputs. 0: OFF 1: ON

4-4 Special I/O and Flexible Format

4-4-1 Frequency Reference/RUN Command Selection

Special I/O and Flexible Format are types of Remote I/O that utilize Modbus communication.
This means that, only when using Special I/O or Flexible Format, you specify Modbus communication as an input method for the frequency reference and RUN command.

● Destination Selection Parameter Settings

Parameter	Description	Setting
A001	1st Frequency Reference Selection	03: Modbus communication (Modbus-RTU)
A002	1st RUN Command Selection	

4-4-2 Special I/O (100/150)

Special I/O is OMRON's unique Remote I/O not defined in the DeviceNet specifications.
This Remote I/O enables access to inverter's internal parameter areas via Modbus communication.
Special I/O enables you to read/write data for two consecutive register numbers by setting the function code.
In addition, you can also read/write data to/from more than one register by switching the function code/register number at fixed intervals using a host program. In this case, on the host, check that the register numbers match before handing the communications. Once the register number set for output matches the register number displayed for input, proceed to the next register number setting step.

Special Remote Output Assembly ID: 100 Dec (64 hex)

● Output Format (CS1/CJ1-series → Inverter)

Word No.	Byte No.	Bit Allocation							
		bit 7	bit 6	bit 5	bit 4	bit 3	bit 2	bit 1	bit 0
n	0	Function Code							
	1	(Set 0.)							
n + 1	2	First Register No. (Low byte)							
	3	First Register No. (High byte)							
n + 2	4	Data 0 (Low byte)							
	5	Data 0 (High byte)							
n + 3	6	Data 1 (Low byte)							
	7	Data 1 (High byte)							

● Output Bit/Data Details

Name	Description
Function Code*1	10: Write data (1 word) 03: Read data (1 word) 50: Write data (Consecutive 2 words) 43: Read data (Consecutive 2 words)
Register No.	Write the register number corresponding to the inverter parameter.
Data 0, 1	Set the data to write to the specified register. Set Data 1 to "0" to write one word of data.

*1 Note that these codes are not the same as the Explicit Message service code/Modbus communication function code.

Precautions for Correct Use

The register number and read/write data are the same as those for Modbus communication. For these settings, refer to Section 6-8 Modbus Communication (Modbus-RTU) Data List of the MX2 User's Manual (Cat. No. I570) and 8-5 Modbus Communication Register Number List of the RX User's Manual (Cat. No. I578).

Special Remote Input Assembly ID: 150 Dec (96 hex)

● Input Format (CS1/CJ1-series ← Inverter)

Word No.	Byte No.	Bit Allocation							
		bit 7	bit 6	bit 5	bit 4	bit 3	bit 2	bit 1	bit 0
n	0	Function Code							
	1	–							
n + 1	2	First Register No. (Low byte)							
	3	First Register No. (High byte)							
n + 2	4	Data 0 (Low byte)							
	5	Data 0 (High byte)							
n + 3	6	Data 1 (Low byte)							
	7	Data 1 (High byte)							

● Input Bit/Data Details

Word No.	Byte No.	Write Success	Read Success	Failure
n	0	0x10 / 0x50	0x03 / 0x43	Function Code OR'ed with 0x80 for Each bit
	1	–	–	–
n + 1	2	First Register No. (Low byte)		
	3	First Register No. (High byte)		
n + 2	4	–	Data 0 (Low byte)	Error Code
	5	–	Data 0 (High byte)	–
n + 3	6	–	Data 1 (Low byte)	–
	7	–	Data 1 (High byte)	–

Precautions for Correct Use

The register number and read/write data are the same as those for Modbus communication. For these settings, refer to Section 6-8 Modbus Communication (Modbus-RTU) Data List of the MX2 User's Manual (Cat. No. I570) and 8-5 Modbus Communication Register Number List of the RX User's Manual (Cat. No. I578).

The error codes for the Special IO operation are listed below.

● Special Remote Input Error Codes

Error Code	Name	Description
01 hex	Function Code Error	A code other than 03/10/43 or 50 hex is set as function code.
02 hex	Register No. Error	The specified register number does not exist.
04 hex	Slave Device Error	The Option Board failed to communicate with the inverter.
21 hex	Data Setting Error	An upper or lower limit for the write data setting range is exceeded.
22 hex	Write Mode Error	Writing to a register that is write-prohibited or in a read-only state (for example, during operation).
23 hex	Register Size Error	Reading/Writing 2-byte data from/to a 4-byte register or 4-byte data from/to a 2-byte register.

Precautions for Correct Use

If a Special I/O read/write error occurs, the most significant bit (word address n, bit 7) of the function code turns ON. Prepare a program that starts error processing from this bit on the host.

Reading/Writing Input/Output Bit Data (Modbus Coil Information)

In Modbus communication, the MX2/RX-series Inverters set control input, status monitor, or other bit information as coil information. This means that you cannot set/check data by reading/writing from/to communications registers.
Use the following registers provided to enable reading/writing of input and output bit information.

● Register No. 1F01 hex for DeviceNet output (Inverter control input)

Bit	15	14	13	12	11	10	9	8	7	6	5	4	3	2	1	0
Name	–	In8	In7	In6	In5	In4	In3	In2	In1	–	–	RS	EXT	Dir	Opr	–
Value	0	0	0	0	0	0	0	0	0	0	0	0	0	0	0	0

Opr	RUN command (0: Stop/1: Run)		In3	General-purpose output terminal [3]
Dir	Rotation direction command (0: Forward/1: Reverse)		In4	General-purpose output terminal [4]
EXT	External trip		In5	General-purpose output terminal [5]
RS	Reset		In6	General-purpose output terminal [6]
In1	General-purpose output terminal [1]		In7	General-purpose output terminal [7]
In2	General-purpose output terminal [2]	RX	In8	General-purpose output terminal [8]

● Register No. 1E01 hex for DeviceNet input (Inverter status monitor)

Bit	15	14	13	12	11	10	9	8	7	6	5	4	3	2	1	0
Name	ONT	RNT	TRQ	UV	–	OTQ	FA3	AL	OD	OL	FA2	FA1	RUN	–	IRDY	Dir
Value	0	0	0	0	0	0	0	0	0	0	0	0	0	0	1	0

Dir	Rotation direction (0: Forward/1: Reverse)	AL	Alarm output
IRDY	Operation ready	FA3	Set frequency only
RUN	During RUN	OTQ	Overtorque/Undertorque
FA1	Constant speed reached	UV	During undervoltage
FA2	Set frequency exceeded	TRQ	During torque limit
OL	Overload warning	RNT	RUN time over
OD	Excessive PID deviation	ONT	Power ON time over

4-4-3 Flexible Format (139/159)

Flexible Format is OMRON's unique Remote I/O not defined in the DeviceNet specifications.
This Remote I/O enables you to allocate more than one data value including those in inverter's internal parameter areas via Modbus communication. You can select the data to allocate using parameters P160 to P179.

- Any data can be selected from all Modbus registers.
- This Remote I/O helps minimize the communications traffic because it sets only the I/O data required for communications.

Flexible Format I/O Allocation

The relationship between Flexible I/O and inverter parameters is as follows.

● Flexible Format I/O Allocation

Word Offset	Description	
	Output Area	Input Area
+0	Modbus register set by P160	Modbus register set by P170
+1	Modbus register set by P161	Modbus register set by P171
+2	Modbus register set by P162	Modbus register set by P172
+3	Modbus register set by P163	Modbus register set by P173
+4	Modbus register set by P164	Modbus register set by P174
+5	Modbus register set by P165	Modbus register set by P175
+6	Modbus register set by P166	Modbus register set by P176
+7	Modbus register set by P167	Modbus register set by P177
+8	Modbus register set by P168	Modbus register set by P178
+9	Modbus register set by P169	Modbus register set by P179

Flexible Format Configuration

Configure the Modbus registers for the functions you want to allocate to the Remote I/O outputs using parameters P160 to P169 and to the Remote I/O inputs using parameters P170 to P179, respectively. A maximum of 10 words can be allocated for both input and output.
After completing the following configuration steps, cycle the power supply of the inverter (DeviceNet Communications Unit).

- Start configuring the parameters from P160 or P170 in order and, when finished configuring the last Modbus register, be sure to set the remaining parameters to 0000 (zero). Setting a parameter to 0000 (zero) causes the register setting to be ignored and not allocated to Remote I/O. The number of words occupied by Remote I/O will be the number of allocated input registers (for input) and the number of allocated output registers (for output).
- Be sure to allocate non-zero registers at least once in the outputs/inputs area of Remote I/O.
- It is not allowed to allocate the same register more than once in the output area of Remote I/O.
- Be sure to configure registers that can always be written to for the output area of Remote I/O.
- Double-word registers must be allocated with two consecutive Modbus registers, firstly the high word and secondly the low word.

Precautions for Correct Use

- Communications data will be written constantly to register numbers which are allocated to the output area of Remote I/O.
  If you set any of the following write-prohibited parameters, an error will be detected in the DeviceNet Communications Unit.

Write-prohibited Parameters
Registers write-prohibited during operation
Parameters which are write-prohibited in the Light Load mode. (When using the Light Load mode.)
Parameters which are protected by parameter b031 (Soft Lock Selection) (Set b031 = 10 to cancel.)

- In the output area of Remote I/O, double-word registers allow only the low word to be set for the output area of Remote I/O.
  In this case, the high-word data is always set to 0000. However, for the input area of Remote I/O, it is not possible to set only the low word.
- For reading/writing input or output bit data (Modbus coil information), use register No. 1F01 hex (inverter control input) or register No. 1E01 hex (inverter status monitor) as described in *4-4-2 Special I/O (100/150)* on page 4-17, respectively.
- If there is any incorrect setting in parameters P160 to 179, an error will be detected (the MS LED will blink red), causing the inverter to be in a trip state (error code E64). In such a case, correct the incorrect parameter value and cycle the power supply of the inverter.
- When using the Flexible Format function, the number of words occupied by the DeviceNet Communications Unit changes.
  After cycling the power supply of the inverter, change the number of occupied words on the Master Unit.

Additional Information

Refer to the following information for a Modbus register list:
MX2 Holding Register List in 6-8 Modbus Communication (Modbus-RTU) Data List (ii) of the MX2 User's Manual (Cat. No. I570)
RX 8-5 Modbus Communication Register Number List of the RX-series Manual (Cat. No. I578).

4-5 When to Input the RUN Command after Establishment of Communications

For safety reasons, this DeviceNet Communications Unit is designed to ignore the input of the RUN command (Forward/Stop or Reverse/Stop) executed (turned ON) before communications are established.
This section describes when to input the RUN command via DeviceNet after establishment of communications.

Communication Connection Process and Establishment of Communications

The DeviceNet Communications Unit executes the process of communication connection with the Master Unit in any of the following situations to establish communications.
You can check whether or not communications are established with the Normal Slave Table on the Master Unit.

- When the inverter (DeviceNet Communications Unit) is powered on.
- When the inverter (DeviceNet Communications Unit) is reset.
- When communications are re-established from the Master Unit.
- When the inverter (DeviceNet Communications Unit) is newly connected to the network

When to Input the RUN Command

The RUN command (Forward/Stop or Reverse/Stop) must be input to the DeviceNet Communications Unit in the following timing after communications are established.

- Upon establishment of communications, the DeviceNet Communications Unit sends the inverter ready signal.
- After confirming the Inverter ready signal, the RUN command is input.
- If the DeviceNet Communications Unit recognizes the RUN command successfully and the inverter moves to a RUN state, it outputs the inverter running (During forward run or During reverse run) signal.

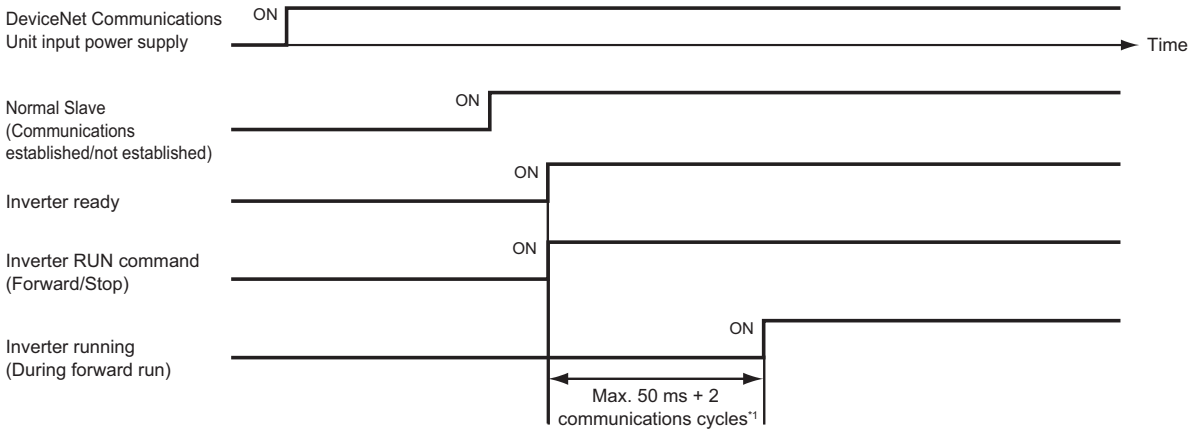

*1 You can check the communication cycle time of DeviceNet communications using CX-Integrator.
When the network configuration is displayed in CX-Integrator, double-click the Master Unit icon to display the [Edit Device Parameters] window. In the [Communication Cycle Time] tab, check the [Communication Cycle Time (Auto Setting)] value.
Because the Communication Cycle Time of DeviceNet communications varies depending on the network configuration, after network configuration changes, be sure to check the Communication Cycle Time and, when necessary, review the input timing of the RUN command.

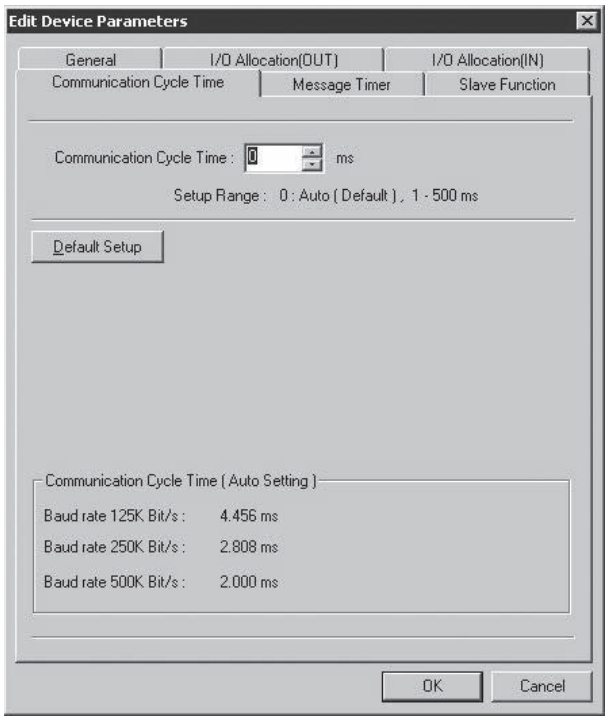

Additional Information

For how to calculate the accurate communication cycle time of DeviceNet communications, refer to Section 8-1 Remote I/O Communications Performance of the CS/CJ-series DeviceNet Units Operation Manual (W380).

Precautions for Correct Use

- In any of the following situations, for safety reasons, turn OFF the inverter RUN command from the host program.
  When the system power supply is OFF, an error occurs, or the Reset command is input to the inverter.
- If the inverter fails to move to the RUN state, once turn OFF the RUN command and input the command again.
- With a third-party Master, the IDLE (communication not ready) message may persist after establishment of communications. In such a case, wait until the IDLE message disappears and, after communications are started normally, secure a sufficient wait time so that the DeviceNet Communications Unit can recognize the RUN command OFF state.
- DeviceNet Communications Unit may not recognize the RUN command OFF state if normal communications are blocked due to noise or other problems since establishment of communications. In this case, take measures against noise for the entire network.

5

Message Communications

This section describes how to read/write inverter parameters by the Message communications function (DeviceNet Explicit Message).

5-1 Outline of Explicit Message 5-2

5-2 Sending Messages from CS/CJ-series 5-3
5-2-1 How to Issue Explicit Messages by CMND Instruction 5-3
5-2-2 When to Issue/Read an Explicit Message 5-6

5-3 Outline of Message Function and Response 5-8

5-4 Parameter Read/Write (Class 64 hex) 5-11
5-4-1 Supported Service Codes 5-11
5-4-2 Parameter Data Size 5-11
5-4-3 Parameter Read/Write Data 5-12
5-4-4 Saving Changes to Holding Registers (ENTER Command) 5-13
5-4-5 Parameter Class/Instance/Attribute 5-13
5-4-6 Ladder Programming Example 5-14

5-5 Parameter Read/Write (Class 65 hex) 5-15
5-5-1 Supported Service Codes 5-15
5-5-2 Supported Instance and Attribute Codes 5-15

5-1 Outline of Explicit Message

Explicit Message is a Message communications function defined in the DeviceNet specifications. It uses the Node Address, Service Code, Class, Instance, Attribute, and other data to achieve Message communications. Because the communications frame of an Explicit Message is standardized in the DeviceNet specifications, the DeviceNet Communications Unit can perform Message communications even with third-party Masters.

Explicit Messages are sent/received as follows:
In Explicit Message communication, data is sent/received basically in units of 1 byte (8 bits).

Explicit Message Communications Frame

Header	Node Address	Service Code	Class	Instance	Attribute	Data	Footer

Item	Description	
Header	The start of the Explicit Message. It shows that this frame is for an Explicit Message request or a response to an Explicit Message. This segment is set by DeviceNet transparently to the user.	
Node Address	Request: Set the node address of the Slave/Master to send a request. Response: The node address of the Slave/Master that returns a response is set.	
Service Code	Request: Set the service code for a request (read/write etc.). Response: The service code of the requested service is returned, with the value of the most significant bit (MSB) changed to 1.	
Class	Functional category (Major category)	These show categories of each function which are defined in the DeviceNet specifications. Use these three codes to specify a function.
Instance	Item category (Minor item)	
Attribute	Attribute (The set value of each function is allocated.)	
Data	Request: Set the data to write, etc. Response: The requested data to be read or error message is attached.	
Footer	The end of the Explicit Message. It is used for the CRC check etc. This segment is set by DeviceNet transparently to the user.	

5-2 Sending Messages from CS/CJ-series

This section describes how to send/receive messages using the Master Unit (Model: CS1W-DRM21 (-V1)/CJ1W-DRM21).

5-2-1 How to Issue Explicit Messages by CMND Instruction

The Master Unit (Model: CS1W-DRM21 (-V1)/CJ1W-DRM21) uses the CMND instruction to issue Explicit Messages.
To issue an Explicit Message, be sure to attach the FINS command (2801) at the beginning and issue it to the Master Unit. Upon receipt of this command, the Master Unit transforms the command data to an Explicit Message and transfer the message to the destination node. You cannot directly specify the destination node using the CMND instruction when issuing an explicit message.

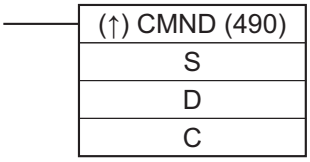

● S: First Word Address of Command Storage Area

Set the first word address of the command data to transfer to the DeviceNet Master Unit. Previously set the data to transfer to consecutive word addresses as shown below.

Word Address	Bit No.	
	15 to 8	7 to 0
S	Command code (Set the FINS Explicit Message command (2801).)	
S + 1	Node address of the Slave/Master to which the Explicit Message is sent: 0 to 3F hex (0 to 63)	Explicit Message service codes Write: 10, Read: 0E
S + 2	Class ID code (Set the DeviceNet Class code of the target function.)*1	
S + 3	Instance ID code (Set the DeviceNet Instance code of the target function.)	
S + 4	Attribute ID code (Set the DeviceNet Attribute code of the target function.)	Attachment data (in case of a write request etc.)
…	Attachment data (in case of a write request etc.)	

*1 For the DeviceNet Communications Unit on an inverter, set 0001 to 002A, 0064, 0065, or 0094 hex.

D: First Word Address of Response Storage Area

Set the first word address of the area to store the response to the Explicit Message.

Precautions for Correct Use

- When the CMND instruction issues an Explicit Message, due to the following reason, the attachment data to the Explicit Message is sent in reverse order of high and low bytes.
  Data on communications lines: Sent in order of low byte (L) to high byte (H).
  Data processed in PLC: Sent in order of high byte (H) to low byte (L).

The attachment data in a response will also be sent in this order.
Note this when sending or receiving a single-word (16-bit) or double-word (32-bit) data.
Most inverter parameters take single-word data, except for the frequency reference, output frequency, and other parameters that take single-word data.

Example) In an Explicit Message communications, single-word data 1234 hex will be sent in order of 34 hex to 12 hex on a communications line.

On the other hand, double-word data 12345678 hex will be sent in order of 78 hex, 56 hex, 34 hex, and 12 hex.

Command Format

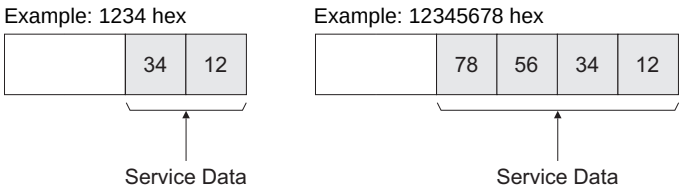

Therefore, in the CMND instruction, set the data in operand S+4 and onwards as follows.

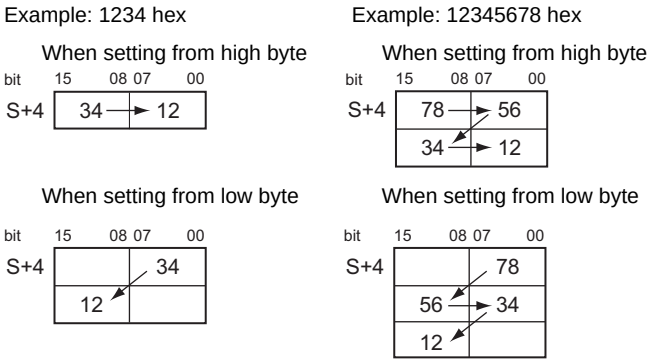

● C: First Word Address of Control Data

Set the first word address to configure the required control data for Message communications. The DeviceNet Master Unit requires that the following control data is previously set to consecutive word addresses.

Word Address	Bit No.		
	15	14 to 8	7 to 0
C	Number of bytes of command data: 0000 to 021E hex (0 to 542 bytes)*1		
C + 1	Number of bytes of response data: 0000 to 021E hex (0 to 542 bytes)*2		
C + 2	Network address: 0000 to 007F hex (0 to 127)*3		
C + 3	Command destination node address :00 to 3F hex (0 to 63)**4		Command destination unit address*5
C + 4	Response*6	Communications port number: 0 to 7*7	Number of sends: 00 to 0F hex (0 to 15)*8
C + 5	Response monitor time: 0000 hex → 2 s 0001 to FFFF hex → 0.1 to 6553.5 s [in units of 0.1 s] *9		

*1 Set how many bytes the command data storage area occupies from first word address S.
*2 Set how many bytes the response data storage area occupies from first word address D.
*3 The setting of 0000 hex indicates the local network.
To use the CMND instruction on the CS/CJ-series, you need to set a network address for each DeviceNet Master Unit. These network addresses can be edited using the routing table editing function of your peripheral tool (except for the programming console).
*4 The node address of the destination Master Unit.
If you set this to 00 hex when word address C + 2 is 0000 hex (local network), the destination is set to the local node.
*5 Set this to FE (Master Unit) or set the Master Unit's unit number 10 to 1F hex (0 to 15).
*6 In word address C + 4, bit 15, set whether the response is required (0) or not required (1).
For Explicit Messages, this must be set to 0 (Response required).
*7 Set the port used for DeviceNet.
*8 Set the how many times the message is to be resent in case of an error response.
*9 For Explicit Messages, this must be set to 2 seconds or more.

5-2-2 When to Issue/Read an Explicit Message

An example of input conditions for issuing the CMND instruction is shown below. Note that the CMND instruction can be executed only once per communications port. Do not execute the CMND instruction when the Network Communications Command Execution Enabled Flag corresponding to each port is set to 0 (OFF).

When to Issue an Explicit Message

The CMND instruction must be issued with a condition which the CS/CJ-series unit's Network Communications Command Execution Enabled Flag and the Master Unit's Message Communications Enabled Flag AND are set.

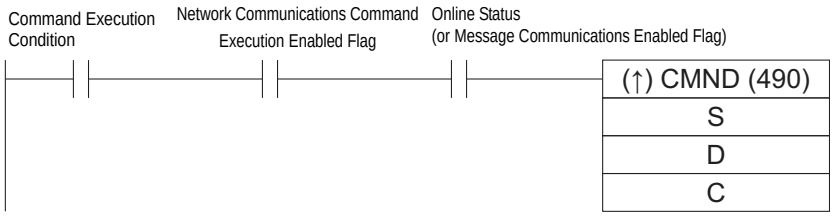

When to Read Response to an Explicit Message

The response to an Explicit Message must be read at the rising edge of the Network Communications Command Execution Enabled Fag for each communications port.

Flags Related to DeviceNet Communications

Type	Flag Name	Address		Description
		Word	Bit	
CS/CJ-series Unit's Flag	Network Communications Command Execution Enabled Flag	A202	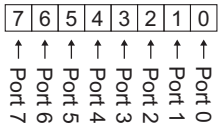	0: Execution disabled (Executing) 1: Execution enabled (Not Executing)
	Network Communications Command Execution Error Flag	A219	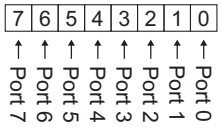	0: Terminated normally 1: Terminated abnormally
Master Unit's Status Flag	Online Status	1500 +2 5 x Unit Number + 11	00	0: Offline 1: Online
	Message Communications Enabled Flag	1500 +2 5 x Unit Number + 24	12	Shows the same status as the online status.*1 0: Offline 1: Online

*1 This function is compatible with that of C200HW-DRM21-V1.

Precautions for Correct Use

For details about the status flag, refer to 3-2 Allocated Relay Area of the CS/CJ-series DeviceNet Units Operation Manual (W380).

5-3 Outline of Message Function and Response

When using the Message function, the DeviceNet Communications Unit on the inverter returns the response in the following method.
In DeviceNet communications, data is sent/received basically in units of 1 byte (8 bits).
For single-word (16-bit) data, the order of high and low bytes will be reversed due to the following reason.

- Data on communications lines: Sent/received in order of low byte to high byte.
- Data processed in programmable controller when issuing a command etc.: Sent/received in order of high byte to low byte.

Therefore, for attributes indicated as "word" in the Size column of the tables provided in *A-1 General Object Specifications* on page A-2 and *A-2 AC Drive Object Specifications* on page A-14, create attachment data or read response data in reverse order of high and low bytes.

Precautions for Correct Use

For Remote I/O, this need not be considered because high and low bytes will be reversed automatically.

● Command Format

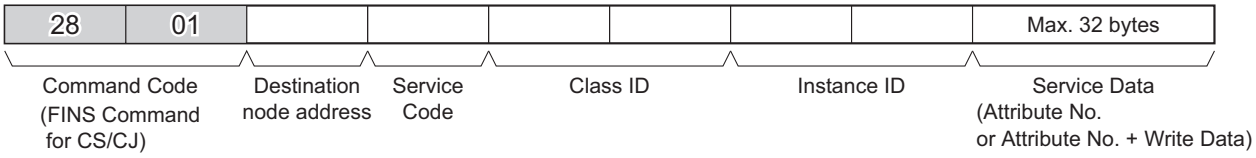

● Response Format

Normal response

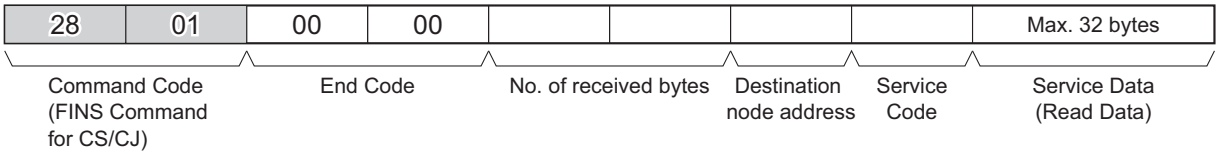

Error response

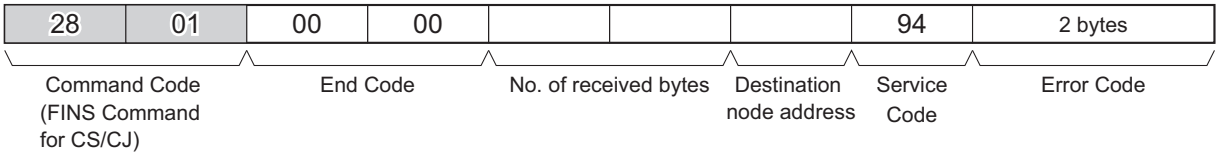

Send failure or timeout

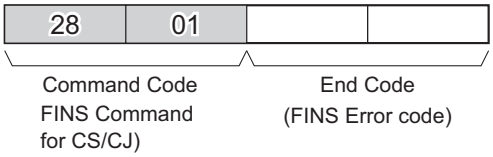

The DeviceNet Communications Unit supports the following service codes.

● Service Codes

Service Description	Read	Write	Reset
Command	0E hex	10 hex	05 hex
Normal response	8E hex	90 hex	85 hex

Parameter Details

● Destination Node Address (Command)

This parameter specifies the destination node address for the Explicit Message.
For the Send Explicit Message command, specify the Master Unit of the local node in the control data of the CMND instruction and the actual destination node in this parameter.

● Service Code (Command, Response)

For a command, specify the service code defined in the DeviceNet network.
For a normal response, a value will be returned with bit 15 of the service code in the command set to 1 (ON). For an error response, 94 hex, which indicates an error, will be returned.

● Class ID (Command)

Specify the destination Class ID for the Explicit Message.

● Instance ID (Command)

Specify the destination Instance ID for the Explicit Message.

● Service Data (Command, Response)

For a command, specify the data defined by the service code.
For a response, the reception data defined by the service code will be returned.

● Number of Received bytes (Response)

The number of bytes of data received from the destination (remote node) node address onwards will be returned.

● Destination (Remote Node) Node Address (Response)

The remote node address of the response issuing source will be returned.

● Error Code (Response)

The error code defined in the DeviceNet specifications will be returned.

Description

- The Explicit Message Send Command sends the Explicit Message defined in the DeviceNet specifications to a Slave Unit and receives a response.
- For the Explicit Message Send Command, unlike other FINS commands, specify the DeviceNet Master Unit as the destination of the control code in the CMND instruction and the actual destination node as the destination node address in the Explicit Message Send Command, respectively.
  Be sure to specify the Master Unit in the control code of the CMND instruction.

Additional Information

- For details about Explicit Message parameters, refer to the DeviceNet specifications.
- For how to obtain the DeviceNet specifications, contact ODVA.
  Home Page: http://www.odva.org/

5-4 Parameter Read/Write (Class 64 hex)

Explicit messages can be used to read and write inverter parameters.
The DeviceNet Communications Unit provides the Instance and Attribute registers corresponding to each parameter of the inverter in Class 64 hex (100 dec). According to the following instructions, set parameters in the corresponding Class, Instance, and Attribute registers to issue an Explicit Message.

5-4-1 Supported Service Codes

The service codes that support the Parameter Read/Write object (Class 64 hex) are shown below.

Service Code No. (hex)	Service Description
0E	Reads Attribute data.
10	Writes Attribute data.

5-4-2 Parameter Data Size

Inverter parameter can take data in two sizes, single-word (16-bit) data and double-word (32-bit) data. Fit the size appropriately to each Attribute data size (each Modbus Register No.) to send/receive data to/from Class 64 hex using Explicit Message.
If the data size is inappropriate, you will receive an error response to the Explicit Message. Check the error code attached to the error response to correct the data size.

● Single-word Parameters

Most inverter parameters take single-word data, although some parameters take double-word data. Be sure to handle data as single-word data even if it is a small value such as 0 or 1.

● Double-word Parameters

For double-word (32-bit) parameters such as the frequency reference and multi-step position command, two Attributes (each Modbus Register No.) are allocated. Use these Attributes (each Modbus Register No.) as appropriate as follows.

- The high-level Attribute (each Modbus Register No.) indicated as HIGH takes double-word data. Data must be always all sent/received at the double-word (32-bit) size to/from this Attribute, regardless of the value to be sent.
- The low-level Attribute (each Modbus Register No.) indicated as LOW takes single-word data. If the setting range “0 to 65535” is sufficient, this Attribute can be used for a single-word data. When writing data, set the high-level Attribute to “0000”.
  When reading data, an error will be detected if the value is larger than “65535”. In this case, use the high-level Attribute indicated as HIGH to handle it as double-word (32-bit) data.

Precautions for Correct Use

If single-word (16-bit) or double-word (32-bit) data is sent/received in an Explicit Message, the order of high and low bytes will be reversed due to the following reason. Therefore, in the Parameter Read/Write data, the Attribute value is located in high byte and the low byte of data is located in low byte. The high byte of data is located in high byte of the next word.

- Data on communications lines: Sent/received in order of low byte to high byte.
- Data processed in PLC when issuing a command etc.: Sent/received in order of high byte to low byte.

5-4-3 Parameter Read/Write Data

The Parameter Read/Write data is calculated according to the rules below and sent/received as a hexadecimal value.

- The set value is divided by the data resolution and converted into a hexadecimal value.

Precautions for Correct Use

The data resolution indicates the minimum setting unit for each Modbus register.

Example: If the output frequency setting is 60 Hz and the data resolution is 0.01 Hz
60 / 0.01 = 6000 → 1770 hex

- Any negative value is represented as a 2's complement number.
  Example: If the Torque Bias Value (P037) is set to -100% and the data resolution is 0.01 Hz (for 3G3MX2)
  100 / 1 = 100 dec → 0064 hex, -100% → FF9C hex

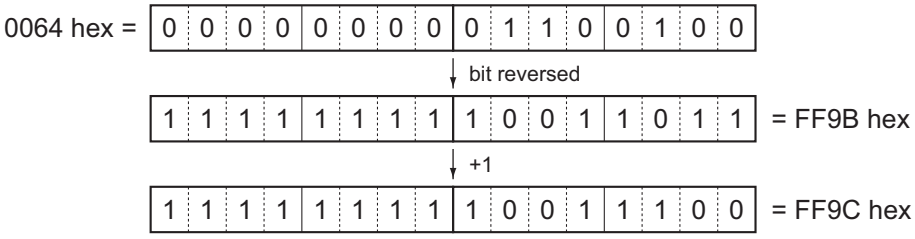

- If the set data is already represented in a hexadecimal form, the data will be sent without converting.
- Each unused bits must be set to 0.
- Do not set data in any unused register.

5-4-4 Saving Changes to Holding Registers (ENTER Command)

Using an Explicit Message to set data in each Attribute causes the new data to overwrite the existing data. However, this new data is not stored in EEPROM and will be lost when the inverter is powered off.
To save changes to the holding registers into EEPROM, you need to issue the ENTER command using the method shown below. In addition, if you have changed a control parameter, you must recalculate the motor parameters. In this case also, use the ENTER command to execute recalculation.

How to Issue ENTER Command (Common to the MX2/RX-series)

To issue the ENTER command (Write to EEPROM), send an Explicit Message to the following Attribute. At this time, select the value to be written using the following table.

Class: 64 hex, Instance: 09 hex, Attribute: 00 hex (Register: 0900 hex)

Set Value	Description
0000	Recalculates the motor parameters.
0001	Stores the set values.
0002 to FFFF	Recalculates the motor parameters and stores the set values.

Precautions for Correct Use

- If you change any of the following parameters, you must recalculate the motor parameters by writing a value of 0000 or 0002 hex to the holding register for the ENTER command.
  Parameters that require recalculation of motor parameters

Function Code	Item	Function Code	Item
A003/A203	Base Frequency	H003/H203	Motor Capacity
A004/A204	Maximum Frequency	H004/H204	Motor Pole Number
A044/A244	Control Method	H005/H205	Speed Response
A082/A282	Motor Incoming Voltage Selection	H020/H220 to H024/H224	Various Motor Parameter
b112	Free V/f Frequency 7	H030/H230 to H034/H234	Various Motor Parameter (Auto-tuning Data)
H002/H202	Motor Parameter		

- Because the inverter EEPROM has a limitation in the number of overwrites (approximately 100,000 times), frequent use of the ENTER command may reduce the life expectancy of the inverter.

5-4-5 Parameter Class/Instance/Attribute

To specify each parameter of the register object in Class 64 hex, use the Modbus register number. Set high byte of the Modbus register to Instance and low byte to Attribute.
For a complete list of Modbus register numbers for each inverter function and parameter, refer to Section 6-8 Modbus Communication (Modbus-RTU) Data List of the MX2 User's Manual (Cat. No. I570) and 8-5 Modbus Communication Register Number List of the RX User's Manual (Cat. No. I578).

5-4-6 Ladder Programming Example

Ladder Programming Example

The following is an example of a program that writes a value of 7.00 s (2BC hex in unit of 0.01 s) into parameter F002 1st Acceleration Time Setting (Modbus Register No. 1103 hex).
Parameter F002 1st Acceleration Time Setting takes double-word data.

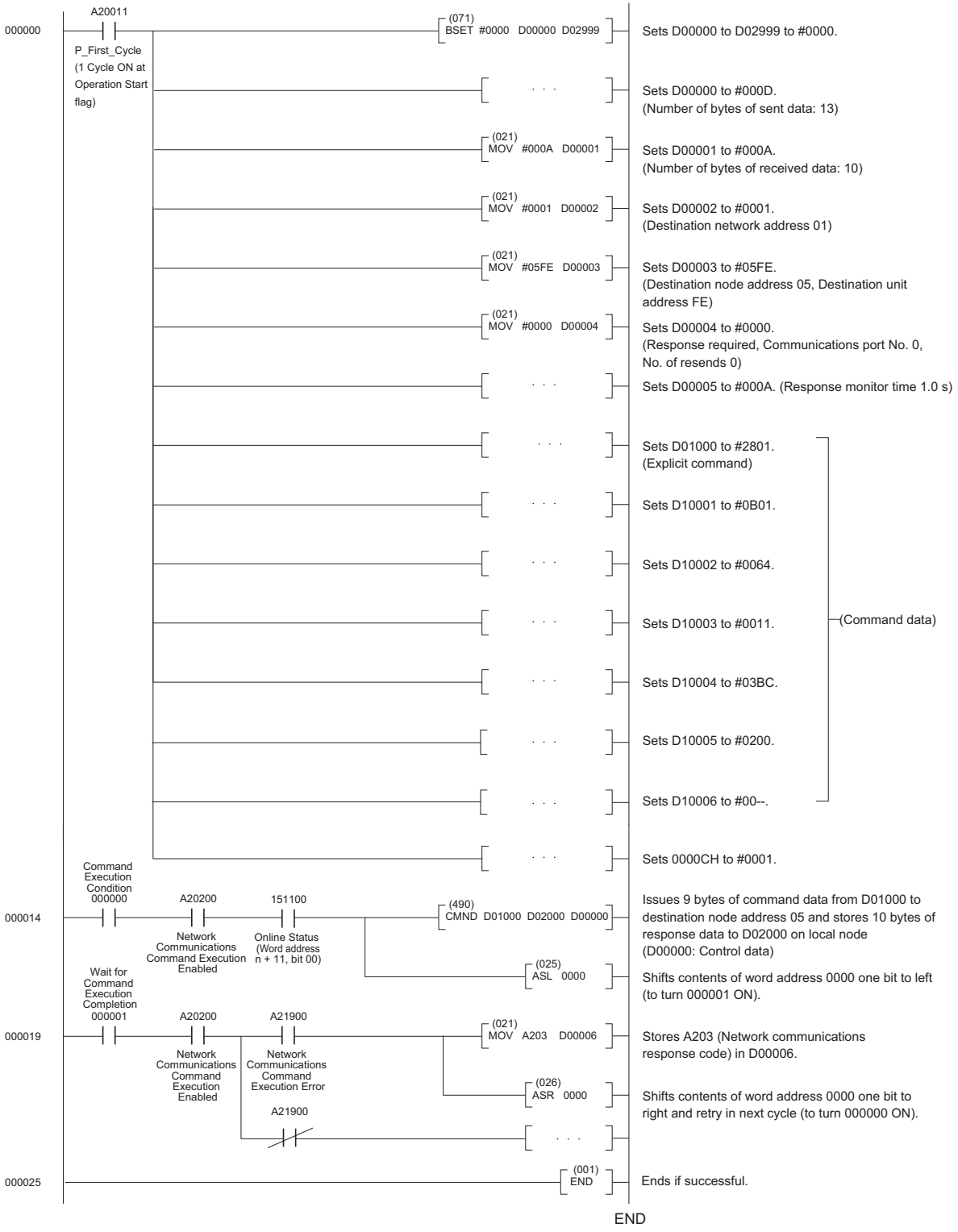

5-5 Parameter Read/Write (Class 65 hex)

5-5-1 Supported Service Codes

● Function Code Object (Class 65 hex) - Supported Service Codes

Service Code No. (hex)	Service Description
0E	Reads Attribute data.
10	Writes Attribute data.

5-5-2 Supported Instance and Attribute Codes

Use each inverter parameter number as a function code for the Instance and Attribute.
A function code is calculated using a sequence number of the parameter function group (A = 0, B = 1, etc) x 1000 + the 3-digit parameter number. This function code is used to allocate the Instance (2 high bytes) and Attribute (2 low bytes).

● Function Code Object (Class 0x65) - Supported Instance and Attribute Codes

Function Code	Decimal Base	Decimal Range	hexadecimal Range
A001 to A999	0	1 - 999	0001 to 03E7
b001 to b999	1000	1000 - 1999	03E9 to 07CF
C001 to C999	2000	2001 - 2999	07D1 to 0BB7
d001 to d999	3000	3001 - 3999	0BB9 to 0F9F
F001 to F999	5000	5001 - 5999	1389 to 176F
H001 to H999	7000	7001 - 7999	1B59 to 1F3F
P001 to P999	15000	15001 - 15999	3A99 to 3E7F
U001 to U999	20000	20001 - 20999	4E21 to 5207

Additional Information

- For details about Modbus registers and data sizes, refer to section 6-8 Modbus Communication (Modbus-RTU) Data List of the MX2 User's Manual (Cat. No. I570) and 8-5 Modbus Communication Register Number List of the RX User's Manual (Cat. No. I578).
- All data written by the function code object are saved temporary in the inverter memory. Be sure to execute the ENTER command at the end of the writing sequence to store the values in EEPROM.
- Function code F001 cannot be written using the function code object.
- Parameter b127 takes double-word data, which is different from the data size of Modbus registers (single word).
- The ENTER command is executed by the following object and written to EEPROM. Refer to *5-4-4 Saving Changes to Holding Registers (ENTER Command)* on page 5-13.
  Write to EEPROM: Class 65 hex, Instance 09 hex, Attribute 00 (0900 hex)

Example 1: Reading a Single-word Function Code

Parameter d005: Multi-function Input Monitor
Command:

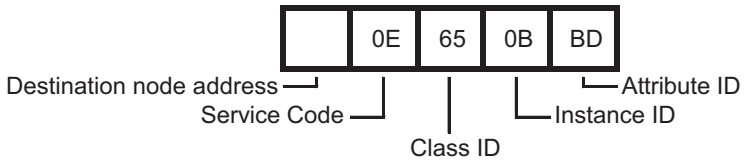

Response:

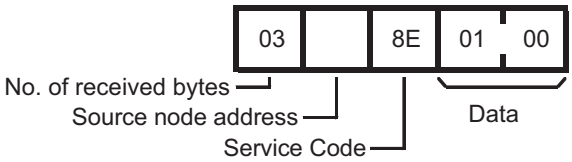

Instance and Attribute are determined as Value 3 (d) x 1000 + 005 = 3005, which is converted to 0BBD hex. The response shows that the value 0001 is read. In DeviceNet, data is sent from low to high bytes.

Example 2: Writing a Double-word Function Code

Parameter P060: Multi-step Position Command 0 (Value: 128000 or 01F400 hex)
Command:

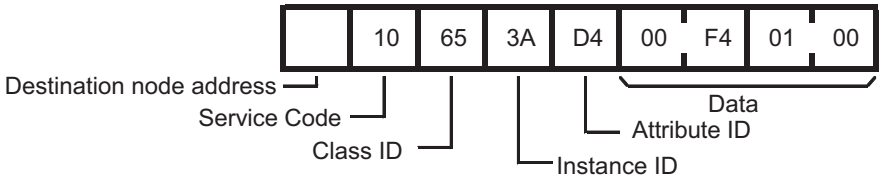

Response:

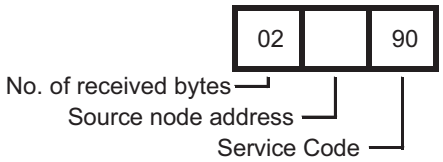

Instance and Attribute are determined as Value 15 (P) x 1000 + 060 = 15060, which is converted to 3AD4 hex. Please note the swapping of the byte order when setting the decimal value 128000. In DeviceNet, data is sent from low to high bytes.

6

Troubleshooting

This section describes the troubleshooting for various problems which may occur in DeviceNet, the inverter, and the DeviceNet Communications Unit.

6-1 Outline of Error Indication 6-2

6-2 Errors on a Communications Line 6-3

6-3 Errors on Inverter or DeviceNet Communications Unit 6-5

6-3-1 Error Codes Related to DeviceNet Communications Error 6-5

6-3-2 Error Codes Related to DeviceNet Communications Unit 6-7

6-3-3 Parameter Setting Error in DeviceNet Communications Unit 6-8

6-4 Errors Related to Message Communications 6-9

6-4-1 FINS Message Errors (CS/CJ-series) 6-9

6-4-2 Explicit Message Errors 6-10

6-5 Special I/O Errors 6-11

6-6 Removing DeviceNet Communications Unit 6-12

6-6-1 How to Remove DeviceNet Communications Unit - MX2-series 6-13

6-6-2 How to Remove DeviceNet Communications Unit - RX-series 6-14

6-1 Outline of Error Indication

If an error occurs during DeviceNet communications, or if the DeviceNet Communications Unit fails, you can check the content of the error with the LED indicator on the inverter Digital Operator and the MS/NS LED indicators on the DeviceNet Communications Unit.
After eliminating the cause of the error according to the instructions provided in this section, reset the inverter.

● Example of LED indicators on MX2-series

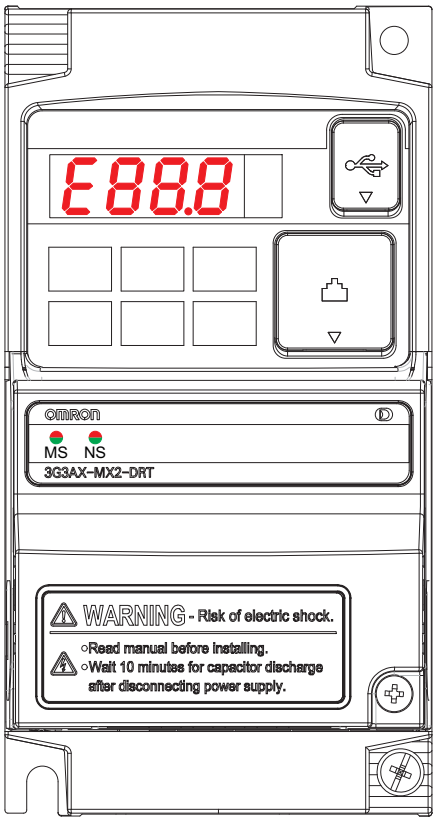

MS	Not lit
MS	Lit red
MS	Lit green
MS	Flashing
MS	Unknown state
E60.1	Inverter error code
0.00	Unknown state

Precautions for Correct Use

Do not clear the trip state before you finish troubleshooting the error. If you clear the trip, the error code will be cleared from the 4-digit display. As a result, you may lose the error information before start troubleshooting. Checking data in the error log is still an option in this case.

6-2 Errors on a Communications Line

If the DeviceNet Communications Unit cannot continue DeviceNet communications due to interruption, short circuit, reverse connection, node address duplication, superimposed noise, or other cause, a transmission fault will be detected.
If a transmission fault occurs, the inverter turns ON the fault contact to stop the motor (free run stop). In this case, check the LED indicator on the DeviceNet Communications Unit and take corrective action.

MS/NS LED Indicators in DeviceNet Communications

The DeviceNet Communications Unit has the MS and NS LED indicators that indicate the states of the power supply and communications.

: Lit, : Flashing, ■ : Not lit

Indicator Name	Indication		Operation State	Description	Corrective Action
	Color	State			
MS	Green		Power ON	DeviceNet Communications Unit is operating normally.	–
			Not set up	DeviceNet Communications Unit is in initial setup state or not ready for communications.	• This DeviceNet Communications Unit does not indicate this state.
	Red		Fatal fault	• Hardware error occurred in DeviceNet Communications Unit. • Unsupported inverter version is used.	• Cycle the inverter's input power supply. • Replace DeviceNet Communications Unit. • Install an inverter with Ver.1.1 or later for MX2-series/Ver.2.0 or later for RX-series.
			Minor fault	Recoverable fault • Network power supply is OFF. • Node address is changed. • Illegal Flexible Format configuration • DeviceNet Communications Unit parameter is out of range or write-prohibited. • DeviceNet Communications Unit detected consecutive communication errors.	Take the following actions and cycle the power supply. • Check network power supply for correct input. • Correct node address configuration. • Review Flexible Format configuration. • Check and correct Remote I/O settings and register numbers. • Take environmental measures such as noise isolation.
	–	■	Power OFF	• Power is not supplied to inverter. • Power is not supplied to DeviceNet Communications Unit because it is not properly connected with inverter. • Unit is reset.	• Check DeviceNet Communications Unit connector and turn on inverter's input power supply. • Check DeviceNet Communications Unit connector and cycle the inverter's input power supply. Replace DeviceNet Communications Unit if error persists. • Check and correct inverter's reset input state or its setting (C102).

Indicator Name	Indication		Operation State	Description	Corrective Action
	Color	State			
NS	Green		Online/Communication connection established	Network is in normal communication state.	–
			Online/Communication connection not established	Network operates normally, but communications with Master Unit are not established.	Take the following actions and cycle the power supply. • Register Master Unit to Scan List. • Check and reconfigure Connection Path (P046). • Power on Master Unit.
	Red		Fatal communications error	DeviceNet Communications Unit detected that network communications were disabled due to some communications error. • Node address duplication • Busoff error, etc.	Take the following actions and cycle the power supply. • Correct node address duplication. • Connect a termination resistance to each end of communications line. • Correct improper connections on communications line. • Correct Master Unit error. (This error occurs if Master Unit stops after establishment of communications.) • Take environmental measures such as noise isolation.
			Minor communications error	DeviceNet Communications Unit detected a communications timeout error.	Take the following actions and cycle the power supply. • Connect a termination resistance to each end of communications line. • Correct improper connections on communications line. • Take environmental measures such as noise isolation.
	–		Offline/ Power OFF	• Power not supplied to DeviceNet Communications Unit. • Network power supply is OFF or DeviceNet connector is unplugged. • Node address duplication (during intermediate process)	• Check DeviceNet Communications Unit connector and turn on inverter's input power supply. Replace DeviceNet Communications Unit if error persists. • Check and correct network power supply and connections. • Correct node address duplication.

Additional Information

If an error occurs on a communications line, a detailed error code is displayed on the LED display of the Master Unit.
Check this error code and take corrective action according to Section 9 Troubleshooting and Maintenance of the CS/CJ-series DeviceNet Units Operation Manual (W380).

6-3 Errors on Inverter or DeviceNet Communications Unit

If an error occurs in the inverter or DeviceNet Communications Unit, an error code is displayed on the Digital Operator's LED indicator.
This section provides information on the error code, assumed cause, and corrective action mainly related to errors on the DeviceNet Communications Unit.
For errors related to the inverter, refer to 7 Maintenance Operations of the MX2 User's Manual (Cat. No.I570) and 10-1 Alarm Codes and Remedies of the RX User's Manual (Cat. No. I578).

6-3-1 Error Codes Related to DeviceNet Communications Error

If an error occurs during DeviceNet communications, it is indicated with the MS/NS LED indicators on the DeviceNet Communications Unit, as well as the inverter error code. Check the content of the error according to the MS/NS LED indicators and the error code. The table below shows the error and the corrective action.

MX2 Error Codes & Indicators	RX Error Codes & Indicators	Assumed Cause	Corrective Action
		Waiting for connection	–
		Device Node Address (P192) does not match Unit's current online address.	This error may occur if Device Node Address (P192) is changed when communication connection is established. Cycle the power supply of inverter.
		DeviceNet Master Unit cannot communicate with DeviceNet Communications Unit because node address is already used.	Check (and correct) the following items: • Does Master Unit or any other slave device on DeviceNet network also use the same node address?
	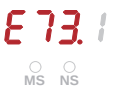	Communication idle was detected during RUN mode.	Check (and correct) the following items: • Is DeviceNet Master Unit sending IDLE messages? Check P048 and select an operation from Operation at Idle Mode Detection Setting. **Note** P048 configuration is unnecessary because OMRON's Master Unit does not send IDLE messages.
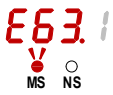	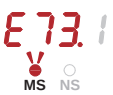	Network power supply failure	Check (and correct) the following items: • Are wires connected to proper pins of DeviceNet connector? • Are there any short circuits or line interruptions? • Is proper power supplied (11 to 25 V)?

MX2 Error Codes & Indicators	RX Error Codes & Indicators	Assumed Cause	Corrective Action
		Major communications error Too many communications errors are detected. (Busoff)	Check (and correct) the following items: • Are wires connected to proper pins of DeviceNet connector? • Are there any short circuits or line interruptions? • Is the ground cable of DeviceNet Communications Unit connected with ground terminal of inverter? Is the ground terminal of inverter connected securely to ground? • Take measures against noise for the entire network according to Section 2-5 Measures against Noise of the DeviceNet Operation Manual (Cat. No. W267). • Are you using proper cable type? • If you have branches from DeviceNet cable trunk line: Are any of these branches too long? • Are termination resistances mounted only on both trunk ends?
	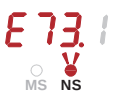	Connection timeout was detected.	Check (and correct) the following items: • Are wires connected to proper pins of DeviceNet connector? • Are there any short circuits or line interruptions? • Take measures against noise for the entire network according to Section 2-5 Measures against Noise of the DeviceNet Operation Manual (Cat. No. W267).

6-3-2 Error Codes Related to DeviceNet Communications Unit

If an error occurs inside the DeviceNet Communications Unit, the inverter stops with the error code displayed. The table below shows the errors and the corrective action.

MX2 Error Codes & Indicators	RX Error Codes & Indicators	Assumed Cause	Corrective Action
		Inverter does not power on.	MX2 Perform troubleshooting according to Section 7-2 Troubleshooting of the MX2 User's Manual (Cat. No. I570). RX Perform troubleshooting according to 10-4 Troubleshooting of the RX User's Manual (Cat. No. I578).
		DeviceNet Communications Unit's Inverter connector is damaged.	Replace DeviceNet Communications Unit.
		Inverter RS input is ON.	Switch inverter RS input OFF.
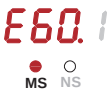	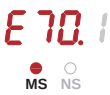	DeviceNet Communications Unit encountered a major error during power-on.	Check if DeviceNet Communications Unit is mounted properly and connector is sufficiently inserted, and then restart DeviceNet Communications Unit. If problem persists, replace DeviceNet Communications Unit.
		Inverter does not support DeviceNet Communications Unit.	Replace the inverter with another inverter, Ver.1.1 or later for MX2-series/Ver.2.0 or later for RX-series.
		DeviceNet Communications Unit's inverter connector is damaged.	Replace DeviceNet Communications Unit.
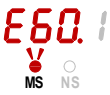	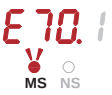	DeviceNet Communications Unit encountered a major error during operation.	Check if DeviceNet Communications Unit is mounted properly and connector is sufficiently inserted, and then restart DeviceNet Communications Unit. If problem persists, replace DeviceNet Communications Unit.
		The inverter is tripped with Force external fault/Trip through Fieldbus.	Clear External trip (EXT) from DeviceNet communications and reset trip state.
		A fatal error was detected while DeviceNet Communications Unit operates.	Check if DeviceNet Communications Unit is mounted properly and connector is sufficiently inserted, and then restart DeviceNet Communications Unit. If problem persists, replace DeviceNet Communications Unit.

6-3-3 Parameter Setting Error in DeviceNet Communications Unit

If the configuration of a parameter disables the DeviceNet Communications Unit to operate normally, an error code will be displayed. The table below shows the errors and the corrective action.

MX2 Error Codes & Indicators	RX Error Codes & Indicators	Assumed Cause	Corrective Action
E64.1 MS NS	E74.1 MS NS	One of configuration parameters P160 to P179 is rejected by inverter.	Check (and correct) the following items: • Is one of parameters P160 to P179 specifying a Modbus register that does not exist? • Is one of parameters P160 to P169 specifying a double-word Modbus register? If so, are low and high words specified in sequence by two consecutive parameters? • Is one of parameters P170 to P179 specifying a double-word Modbus register? If so, are high and low words specified in sequence by two consecutive parameters? • Is a specific Modbus register specified twice in output parameters P160 to P169? • Is one of parameters P160 to P169 specifying a Modbus register that is read-only? MX2 A register is read-only if it has an "R" in the R/W column of the register table in Section 6-8 Modbus Communication (Modbus-RTU) Data List of the MX2 User's Manual (Cat. No. I570). RX A register is read-only if it has an "R" in the R/W column of the register table in 8-5 Modbus Communication Register Number List of the RX User's Manual (Cat. No. I578). • Is one of output parameters P160 to P169 specifying a Modbus register that is write-prohibited during operation? MX2 A parameter is write-prohibited during operation if "no" is put in the "Data can be changed during RUN" column of the table in Section 4 of the MX2 Inverter manual (Cat. No. I570). RX A parameter is write-prohibited during operation if "No" is put in the "Changes during operation" column of the table in Appendix 1 Parameter List of the RX Inverter manual (Cat. No. I578). After correcting configuration, cycle the power supply.
E65.1 MS NS	E75.1 MS NS	Inverter settings are not compatible with this version of DeviceNet Communications Unit.	• Check P046 value is in range [0 to 7] and restart DeviceNet Communications Unit. • Initialize inverter parameters.

6-4 Errors Related to Message Communications

To send a DeviceNet explicit message from a CS/CJ-series unit, use a FINS message.
If any Explicit Message/FINS message is not completed normally, check the contents of the FINS message response.

6-4-1 FINS Message Errors (CS/CJ-series)

The table below shows the assumed cause and corrective action for each FINS response.

FINS Response	Description	Assumed Cause	Corrective Action
0000	Normal completion	–	–
0101	Local node not in network	Local node (Master Unit) is not participating in network.	Check Master Unit settings and network configuration.
0105	Local node address range error	Local node address (Master Unit) setting is out of range 0 to 63.	Set DeviceNet node address correctly. Set a non-duplicate node address in range of 0 to 63.
0106	Local node address duplication	Local node (Master Unit) MAC address setting overlaps with that of another node in network.	
0201	Destination node not in network	Destination node is not in network. (MS and NS LED indicators not indicating normal state)	Add destination node correctly to the network.
0202	Destination node unit missing	Node address setting is incorrect.	Check destination node address.
		Master Unit FINS address is incorrect.	Check FINS address in CMND instruction control data.
0205	Response timeout	Response monitor time in CMND instruction control data is too short.	Increase length of response monitor time.
		Message frame was destroyed by noise.	Check noise conditions (external noise from communications power supply, communication lines, switching device, etc.) and take corrective action. Increase number of retries.
0401	Undefined command	Master Unit received a undefined command.	Check FINS command (2801) in CMND instruction.
		Master Unit received a FINS command not destined for it.	Check FINS address in CMND instruction control data.

Additional Information

For details about FINS commands not described above, refer to SYSMAC CS/CJ-series Communications Commands Reference Manual (Cat. No. W342).No.

6-4-2 Explicit Message Errors

If there is an Explicit message that is issued but not completed normally, the response will be returned with one of the following error codes attached to service code 94. If this occurs, check the error message and correct the request message or otherwise resend the message in a timely fashion.

Error Code	Description	Corrective Action
0000	Normal completion response	–
02FF	Internal communication error	Check if DeviceNet Communications Unit's connector is sufficiently inserted and resend. If problem persists, replace DeviceNet Communications Unit.
08FF	Requested service does not exist.	Correct service code and resend.
09FF	Invalid Attribute was detected.	Correct Attribute value and resend.
0CFF	Requested service cannot be executed in object mode/state.	Stop inverter and resend.
0EFF	Request for changing unchangeable Attribute was received.	Correct service code/Attribute value and resend.
10FF	Service execution disabled mode	Requested service cannot be executed in current inverter mode. Correct mode or service and resend.
13FF	Data is insufficient for this service.	Provide data in correct size and resend.
14FF	There is no Attribute for this service.	Correct service code/Attribute value and resend.
15FF	There is too much data for this service.	Provide data in correct size and resend.
16FF	Specified object does not exist.	Correct Class/Instance value and resend.
20FF	Parameter for this request is invalid, or data is out of range.	Check data setting range, correct data, and resend.
1FFF	Vendor-specific error	Stop inverter and resend. Or check data setting range, correct data, and resend.

6-5 Special I/O Errors

If a problem is found in the output data of Special I/O, the inverter returns an error code to the input data without executing the request.
Determine whether or not an error occurred by the most significant bit (word address n, bit 7) of the function code in the input data.
In case of an error, the function code in the input data has a value of the output data added with 80 hex.
The table below shows the error code and corrective action for each Special I/O error.

Error Code	Name	Description	Corrective Action
01 hex	Function Code Error	A code other than 03/10/43 or 50 hex is set as function code.	Check and correct function code.
02 hex	Register No. Error	Specified register number does not exist.	Check and correct register number.
04 hex	Slave Device Error	Option inverter communications error (Internal communications error occurred between DeviceNet Communications Unit and inverter)	Check if DeviceNet Communications Unit is mounted properly (if connector is sufficiently inserted). If problem persists, replace DeviceNet Communications Unit.
21 hex	Data Setting Error	Upper or lower limit of write data setting range is exceeded.	Check and correct data size so data is within data setting range.
22 hex	Write Mode Error	Inverter mode is incorrect. • Changing unchangeable register during operation. • ENTER command was issued during operation (UV*1). • Writing to register in trip (UV*1) state. • Writing to register in soft lock mode. • Changing an unchangeable input/output terminal. • Changing contact type of terminal to which RS (Reset) is allocated. • Writing to a register when auto-tuning is enabled. • Writing to a lock-enabled register during password setting.	• Write after stopping inverter operation. • Write after clearing UV error. • Write after releasing soft lock. • Correct after checking if terminal is changeable. • Write after completing auto-tuning. • Write after canceling password setting.
23 hex	Register Size Error	Reading/Writing 2-byte data from/to a 4-byte register or 4-byte data from/to a 2-byte register.	Check and correct data size properly.

*1 UV: During undervoltage

6-6 Removing DeviceNet Communications Unit

⚠ DANGER	
	Do not attempt to remove the terminal block cover or disconnect and reconnect the DeviceNet Communications Unit during power on or within 10 minutes after power off. Doing so may result in severe injury due to electric shock.

⚠ Caution	
	Inverters contain high voltage parts and short-circuits may sometimes cause product damage or property damage. Measures must be taken to prevent chips, lead-wire pieces, or other metal waste from entering the product, for example, by installing a cover.
	Do not attempt to disassemble, repair, or modify the DeviceNet Communications Unit. Doing so may result in injury.

Operation and Adjustment

- Be sure to confirm the permissible range of motors and machines before operation because the speed can be set from low to high.
- Before starting the CPU Unit and inverter programs, check the program contents as well as the interactions between these programs.

Maintenance and Inspection

- Be sure to confirm safety before conducting maintenance, inspection or parts replacement.
- Invalid parameter configuration may result in a communications error, interrupting the communications function of other units. Before participating in the network, make sure that the communications configuration parameters are set properly.
- Using a support tool to write all inverter parameters causes the DeviceNet configuration parameters to be overwritten. Before reconnecting to DeviceNet, make sure that the address and I/O allocations are correct.

6-6-1 How to Remove DeviceNet Communications Unit - MX2-series

When you remove the DeviceNet Communications Unit for replacement or inspection, follow the steps below. For the mounting steps, refer to *2-2 Installation* on page 2-5.

1 **Loosen the DeviceNet Communications Unit mounting screw.**

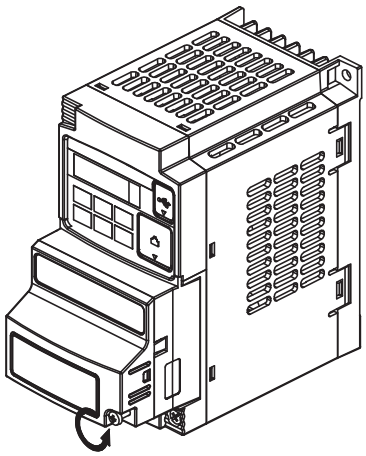

2 **Pull the DeviceNet Communications Unit straight out of the inverter while pushing down on the indicated sides to release the snap-fits.**

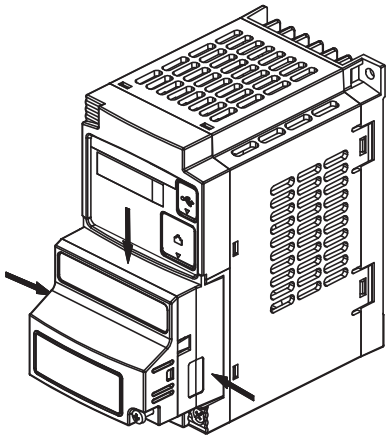

3 **For Inverters up to 4.0 kW, loosen the screws of the terminal block cover to remove the cover.**

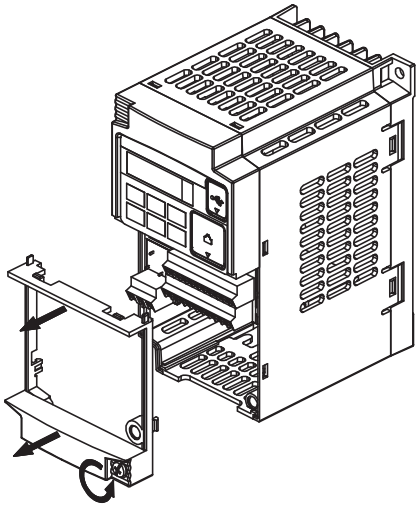

4 **Unscrew and remove the DeviceNet Communications Unit grounding cable.**

1-phase 200 V 0.1 to 2.2 kW
3-phase 200 V 0.1 to 3.7 kW
3-phase 400 V 0.4 to 4.0 kW

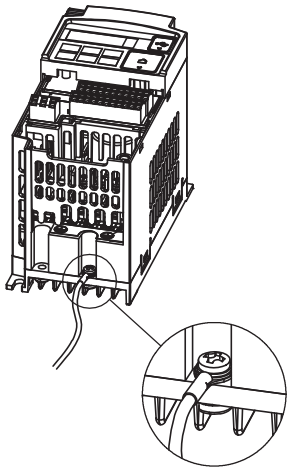

3-phase 200 V 5.5 to 15 kW
3-phase 400 V 5.5 to 15 kW

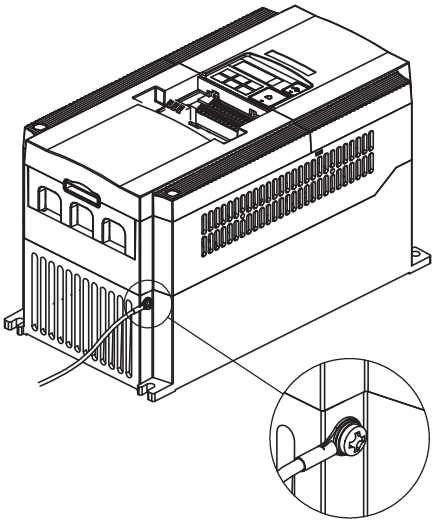

6-6-2 How to Remove DeviceNet Communications Unit - RX-series

When you remove the DeviceNet Communications Unit for replacement or inspection, follow the steps below. For the mounting steps, refer to *2-2 Installation* on page 2-5.

1 **Remove the Digital Operator by pushing the lip on the top.**

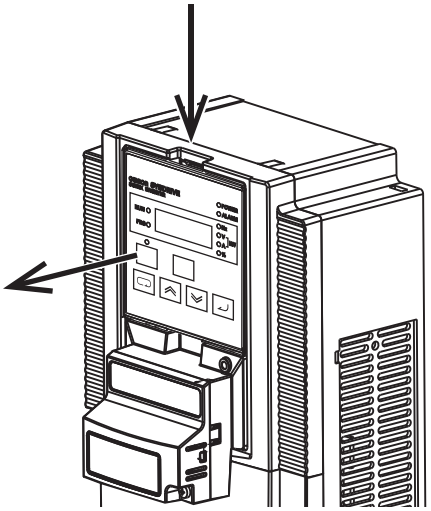

2 **Remove the terminal cover from the Inverter.**

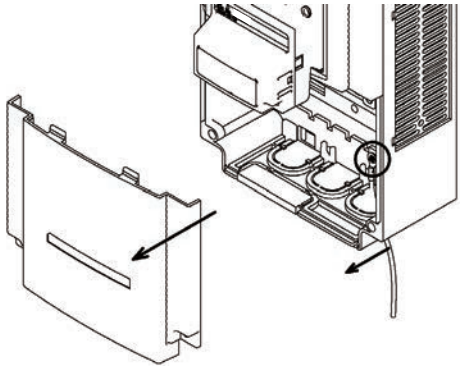

3 **Remove the grounding cable of inverter.**

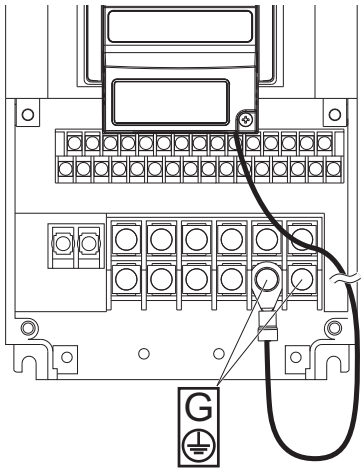

4 **Remove the DeviceNet Communications Unit by the indicated step.**

Be careful not to stress the flat cable.

(a) Push up the DeviceNet Communications Unit to have a space under the bottom.

(b) While pushing it up, draw out the DeviceNet Communications Unit to the near side.

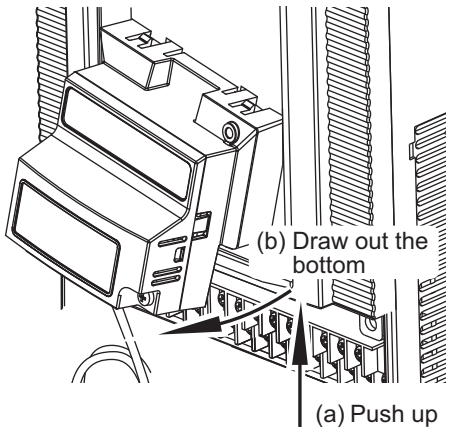

5 **Remove the Inverter connection PCB by holding at the indicated locations.**

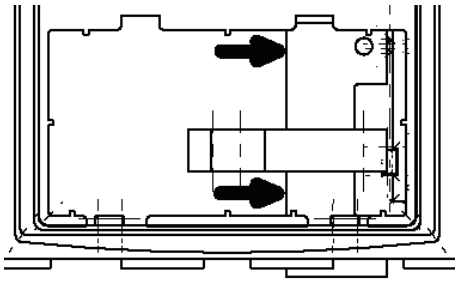

A

Appendices

This section contains the general object specifications and AC drive object specifications.

A-1 General Object Specifications A-2
A-1-1 Identity Object (Class 01 hex) A-2
A-1-2 Message Router Object (Class 02 hex) A-5
A-1-3 DeviceNet Object (Class 03 hex) A-5
A-1-4 Assembly Object (Class 04 hex) A-6
A-1-5 Connection Object (Class 05 hex) A-7
A-1-6 Discrete Input Point Object (Class 08 hex) A-12
A-1-7 Discrete Output Point Object (Class 09 hex) A-12
A-1-8 Unit Parameter Object (Class 94 hex) A-13

A-2 AC Drive Object Specifications A-14
A-2-1 Motor Data Object (Class 28 hex) A-14
A-2-2 Control Supervisor Object (Class 29 hex) A-15
A-2-3 AC/DC Drive Object (Class 2A hex) A-19

A-1 General Object Specifications

A-1-1 Identity Object (Class 01 hex)

Supported Service Codes

Table A-1 Identity Object - Supported Service Codes

Service Code No. (hex)	Service Description
0E	Reads Attribute data.
05	Resets data (to initial status).

Object Details

Table A-2 Identity Object - Object Details

Instance (hex)	Attribute (hex)	Name	Description	Setting Range	Default	Read	Write	Size
01	01	Vendor ID	Indicates the manufacturer's ID.	----	47 (OMRON Configuration)	Yes	No	UINT
	02	Device Type	Indicates the DeviceNet profile classification.	----	2 (AC Drive)	Yes	No	UINT
	03	Product Code	Depends on the inverter model.	----	Refer to Table A-3 or A-4.	Yes	No	UINT
	04	Revision	Indicates overall software revisions for the DeviceNet Communications Unit and the inverter. Note that this Attribute depends on both the DeviceNet Communications Unit and the inverter. Be sure to apply the correct EDS file to this revision during configuration.	----	Depends on Unit.	Yes	No	word
	05	Status	Indicates the communications status for the DeviceNet Communications Unit. Bit allocation: 0: Always ON 8: Minor recoverable fault 9: Minor unrecoverable fault 10: Major recoverable fault 11: Major unrecoverable fault	----	0 hex	Yes	No	UINT
	06	Serial Number	Indicates the serial number of the DeviceNet Communications Unit.	----	Unique to each Unit	Yes	No	LONG

Instance (hex)	Attribute (hex)	Name	Description	Setting Range	Default	Read	Write	Size
01	07	Product Name	Depends on the inverter model.	----	Refer to Table A-3 or A-4	Yes	No	UINT
	09	Configuration Consistency Value	Indicates the consistency value which is incremented if an inverter parameter is changed and stored to EEPROM through the DeviceNet Communications Unit interface. Please note that changes using the other inverter interfaces (Serial, Digital Operator) do not influence this Attribute. Writing to EEPROM Save (Modbus address 0900 hex, Class 64 hex, Instance 09 hex, Attribute 0 hex) also increments this value.	----	0 hex	Yes	No	UINT
	65	Firmware Revision Option Board	Indicates the software version of the DeviceNet Communications Unit.	----	Depends on Unit.	Yes	No	word

Additional Information

The product code and the product name depend on the model of inverter being used, as shown in the following tables.

Table A-3 MX2-series Model List

Inverter Model	Product Name	ID Code	Name of EDS File
3G3MX2-AB001 3G3MX2-A2001	3G3AX-MX2-DRT-AB001_A2001	1920	3G3AX-MX2-DRT-AB001_A2001.eds
3G3MX2-AB002 3G3MX2-A2002	3G3AX-MX2-DRT-AB002_A2002	1921	3G3AX-MX2-DRT-AB002_A2002.eds
3G3MX2-AB004 3G3MX2-A2004	3G3AX-MX2-DRT-AB004_A2004	1922	3G3AX-MX2-DRT-AB004_A2004.eds
3G3MX2-AB007 3G3MX2-A2007	3G3AX-MX2-DRT-AB007_A2007	1924	3G3AX-MX2-DRT-AB007_A2007.eds
3G3MX2-AB015 3G3MX2-A2015	3G3AX-MX2-DRT-AB015_A2015	1926	3G3AX-MX2-DRT-AB015_A2015.eds
3G3MX2-AB022 3G3MX2-A2022	3G3AX-MX2-DRT-AB022_A2022	1927	3G3AX-MX2-DRT-AB022_A2022.eds
3G3MX2-A2037	3G3AX-MX2-DRT-A2037	1929	3G3AX-MX2-DRT-A2037.eds
3G3MX2-A2055	3G3AX-MX2-DRT-A2055	1931	3G3AX-MX2-DRT-A2055.eds
3G3MX2-A2075	3G3AX-MX2-DRT-A2075	1932	3G3AX-MX2-DRT-A2075.eds
3G3MX2-A2110	3G3AX-MX2-DRT-A2110	1933	3G3AX-MX2-DRT-A2110.eds
3G3MX2-A2150	3G3AX-MX2-DRT-A2150	1934	3G3AX-MX2-DRT-A2150.eds
3G3MX2-A4004	3G3AX-MX2-DRT-A4004	1942	3G3AX-MX2-DRT-A4004.eds
3G3MX2-A4007	3G3AX-MX2-DRT-A4007	1944	3G3AX-MX2-DRT-A4007.eds
3G3MX2-A4015	3G3AX-MX2-DRT-A4015	1946	3G3AX-MX2-DRT-A4015.eds

Inverter Model	Product Name	ID Code	Name of EDS File
3G3MX2-A4022	3G3AX-MX2-DRT-A4022	1947	3G3AX-MX2-DRT-A4022.eds
3G3MX2-A4030	3G3AX-MX2-DRT-A4030	1948	3G3AX-MX2-DRT-A4030.eds
3G3MX2-A4040	3G3AX-MX2-DRT-A4040	1950	3G3AX-MX2-DRT-A4040.eds
3G3MX2-A4055	3G3AX-MX2-DRT-A4055	1951	3G3AX-MX2-DRT-A4055.eds
3G3MX2-A4075	3G3AX-MX2-DRT-A4075	1952	3G3AX-MX2-DRT-A4075.eds
3G3MX2-A4110	3G3AX-MX2-DRT-A4110	1953	3G3AX-MX2-DRT-A4110.eds
3G3MX2-A4150	3G3AX-MX2-DRT-A4150	1954	3G3AX-MX2-DRT-A4150.eds

Table A-4 RX-series Model List

Inverter Model	Product Name	ID Code	Name of EDS File
3G3RX-A2004	3G3AX-RX-DRT-A2004	2203	3G3AX-RX-DRT-A2004.eds
3G3RX-A2007	3G3AX-RX-DRT-A2007	2204	3G3AX-RX-DRT-A2007.eds
3G3RX-A2015	3G3AX-RX-DRT-A2015	2205	3G3AX-RX-DRT-A2015.eds
3G3RX-A2022	3G3AX-RX-DRT-A2022	2206	3G3AX-RX-DRT-A2022.eds
3G3RX-A2037	3G3AX-RX-DRT-A2037	2207	3G3AX-RX-DRT-A2037.eds
3G3RX-A2055	3G3AX-RX-DRT-A2055	2208	3G3AX-RX-DRT-A2055.eds
3G3RX-A2075	3G3AX-RX-DRT-A2075	2209	3G3AX-RX-DRT-A2075.eds
3G3RX-A2110	3G3AX-RX-DRT-A2110	2210	3G3AX-RX-DRT-A2110.eds
3G3RX-A2150	3G3AX-RX-DRT-A2150	2211	3G3AX-RX-DRT-A2150.eds
3G3RX-A2185	3G3AX-RX-DRT-A2185	2212	3G3AX-RX-DRT-A2185.eds
3G3RX-A2220	3G3AX-RX-DRT-A2220	2213	3G3AX-RX-DRT-A2220.eds
3G3RX-A2300	3G3AX-RX-DRT-A2300	2214	3G3AX-RX-DRT-A2300.eds
3G3RX-A2370	3G3AX-RX-DRT-A2370	2215	3G3AX-RX-DRT-A2370.eds
3G3RX-A2450	3G3AX-RX-DRT-A2450	2216	3G3AX-RX-DRT-A2450.eds
3G3RX-A2550	3G3AX-RX-DRT-A2550	2217	3G3AX-RX-DRT-A2550.eds
3G3RX-A4004	3G3AX-RX-DRT-A4004	2230	3G3AX-RX-DRT-A4004.eds
3G3RX-A4007	3G3AX-RX-DRT-A4007	2231	3G3AX-RX-DRT-A4007.eds
3G3RX-A4015	3G3AX-RX-DRT-A4015	2232	3G3AX-RX-DRT-A4015.eds
3G3RX-A4022	3G3AX-RX-DRT-A4022	2233	3G3AX-RX-DRT-A4022.eds
3G3RX-A4037	3G3AX-RX-DRT-A4037	2234	3G3AX-RX-DRT-A4037.eds
3G3RX-A4055	3G3AX-RX-DRT-A4055	2235	3G3AX-RX-DRT-A4055.eds
3G3RX-A4075	3G3AX-RX-DRT-A4075	2236	3G3AX-RX-DRT-A4075.eds
3G3RX-A4110	3G3AX-RX-DRT-A4110	2237	3G3AX-RX-DRT-A4110.eds
3G3RX-A4150	3G3AX-RX-DRT-A4150	2238	3G3AX-RX-DRT-A4150.eds
3G3RX-A4185	3G3AX-RX-DRT-A4185	2239	3G3AX-RX-DRT-A4185.eds
3G3RX-A4220	3G3AX-RX-DRT-A4220	2240	3G3AX-RX-DRT-A4220.eds
3G3RX-A4300	3G3AX-RX-DRT-A4300	2241	3G3AX-RX-DRT-A4300.eds
3G3RX-A4370	3G3AX-RX-DRT-A4370	2242	3G3AX-RX-DRT-A4370.eds
3G3RX-A4450	3G3AX-RX-DRT-A4450	2243	3G3AX-RX-DRT-A4450.eds
3G3RX-A4550	3G3AX-RX-DRT-A4550	2244	3G3AX-RX-DRT-A4550.eds
3G3RX-B4750	3G3AX-RX-DRT-B4750	2245	3G3AX-RX-DRT-B4750.eds
3G3RX-B4900	3G3AX-RX-DRT-B4900	2246	3G3AX-RX-DRT-B4900.eds
3G3RX-B411K	3G3AX-RX-DRT-B411K	2247	3G3AX-RX-DRT-B411K.eds
3G3RX-B413K	3G3AX-RX-DRT-B413K	2248	3G3AX-RX-DRT-B413K.eds

A-1-2 Message Router Object (Class 02 hex)

Object Details

No vendor-specific attributes are supported.

A-1-3 DeviceNet Object (Class 03 hex)

Supported Service Codes

Table A-5 DeviceNet Object - Supported Service Codes

Service Code No. (hex)	Service Description
0E	Reads Attribute data.
10	Writes Attribute data.

Object Details

Table A-6 DeviceNet Object - Object Details

Instance (hex)	Attribute (hex)	Name	Description	Setting Range	Default	Read	Write	Size
01	01	MAC ID	Node address of DeviceNet Communications Unit	0-63	63	Yes	Yes	USINT
	02	Baud Rate	0: 125 kbit/s 1: 250 kbit/s 2: 500 kbit/s	0-2	0	Yes	No	UINT
	03	BOI	BOI Busoff interruption	----	0	Yes	No	BOOL
	04	Busoff Counter	Number of Busoff detections	----	0	Yes	No	USINT
	05	Allocation Information	DeviceNet communication connection information	----	0	Yes	No	word
	06	MAC ID Switch Changed	Node address change required after power-off or reset	----	0	Yes	No	BOOL
	08	MAC ID Switch Value	Node address setting actual value	----	63	Yes	No	UINT

A-1-4 Assembly Object (Class 04 hex)

Supported Service Codes

Table A-7 Assembly Object - Supported Service Codes

Service Code No. (hex)	Service Description
0E	Reads Attribute data.
10	Writes Attribute data.

Object Details

Table A-8 Assembly Object - Object Details

Instance (hex)	Attribute (hex)	Name	Description	Setting Range	Default	Read	Write	Size
14	03	Remote I/O Data	Same function as Basic Speed I/O (Output)	----	00 00 00 00	Yes	Yes	byte x 4
15	03	Remote I/O Data	Same function as Extended Speed I/O (Output)	----	00 00 00 00	Yes	Yes	byte x 4
46	03	Remote I/O Data	Same function as Basic Speed I/O (Input)	----	00 00 00 00	Yes	No	byte x 4
47	03	Remote I/O Data	Same function as Extended Speed I/O (Input)	----	00 00 00 00	Yes	No	byte x 4
64	03	Remote I/O Data	Same function as Special I/O (Output)	----	00 00 00 00 00 00 00 00	Yes	Yes	byte x 8
65	03	Remote I/O Data	Same function as Extended Control I/O (Output)	----	00 00 00 00 00 00 00 00	Yes	Yes	byte x 8
6E	03	Remote I/O Data	Same function as Extended Speed and Acceleration Control (Output)	----	00 00 00 00 00 00 00 00	Yes	Yes	byte x 8
6F	03	Remote I/O Data	Same function as Extended Speed and Acceleration Control (Input)	----	00 00 00 00 00 00 00 00	Yes	No	byte x 8
7B	03	Remote I/O Data	Same function as Extended Speed and Torque Control (Output)	----	00 00 00 00 00 00	Yes	Yes	byte x 6
8B	03	Remote I/O Data	Same function as Flexible Format (Output)	----	00 00 00 00 00 00 00 00 00 00 00 00 00 00 00 00 00 00 00 00	Yes	Yes	byte x 20 max.*
96	03	Remote I/O Data	Same function as Special I/O (Input)	----	00 00 00 00 00 00 00 00	Yes	No	byte x 8

Instance (hex)	Attribute (hex)	Name	Description	Setting Range	Default	Read	Write	Size
97	03	Remote I/O Data	Same function as Extended Control I/O (Input)	----	00 00 00 00 00 00 00 00	Yes	No	byte x 8
99	03	Remote I/O Data	Same function as Extended Control I/O and Multi function I/O Monitor (Input)	----	00 00 00 00 00 00 00 00 00	Yes	No	byte x 9
9F	03	Remote I/O Data	Same function as Flexible Format (Input)	----	00 00 00 00 00 00 00 00 00 00 00 00 00 00 00 00 00 00 00 00	Yes	No	byte x 20 max.*

* The size of the Flexible Format assembly is dependent on the actual configuration.

Additional Information

- The data to be allocated to each assembly in this object is the same as that defined in *Section 4 Remote I/O* on page 4-1.

A-1-5 Connection Object (Class 05 hex)

Supported Service Codes

Table A-9 Connection Object - Supported Service Codes

Service Code No. (hex)	Service Description
0E	Reads Attribute data.
10	Writes Attribute data.

Object Details

Table A-10 Connection Object - Object Details

Instance (hex)	Attribute (hex)	Name	Description	Setting Range	Default	Read	Write	Size
01 Explicit Message	01	State	Status of the Instance	----	3	Yes	No	USINT
	02	Instance Type	Type of the Instance	----	0	Yes	No	USINT
	03	Transport Class Trigger	Defines communications type by code.	----	83 hex	Yes	No	byte
	04	Produced Connection ID	Indicates the communications ID set by the DeviceNet Master Unit.	----	----	Yes	No	UINT
	05	Consumed Connection ID	Indicates the communications ID set by the DeviceNet Master Unit.	----	----	Yes	No	UINT
	06	Initial Comm Characteristics	Indicates the communication configuration of the DeviceNet Master Unit.	----	21 hex	Yes	No	byte

Instance (hex)	Attribute (hex)	Name	Description	Setting Range	Default	Read	Write	Size
01 Explicit Message	07	Produced Connection Size	Indicates the maximum number of bytes for transmission.	----	260	Yes	No	UINT
	08	Consumed Connection Size	Indicates the maximum number of bytes for reception.	----	260	Yes	No	UINT
	09	Expected Packet Rate	Indicates the length of the internal processing timeout when a communications request is received (incremented in units of 10 ms).	0 - 65535	0	Yes	Yes	UINT
	0C	Watchdog Timeout Action	Indicates the action for internal processing timeout related to communications. 00: Retain timeout status (until reset or cleared) 01: Cut connection automatically 02: Operate with the same connection	----	1	Yes	Yes	USINT
	0D	Produced Connection Path Length	Number of bytes for the produced connection path. Zero (0) for Explicit Messages	----	0	Yes	No	UINT
	0E	Produced Connection Path	Specifies the application object for the produced connection path. No data for explicit messages	----	Empty	Yes	No	ARRAY
	0F	Consumed Connection Path Length	Number of bytes for the consumed connection path. Zero (0) for Explicit Messages	----	0	Yes	No	UINT
	10	Consumed Connection Path	Specifies the application object for the consumed connection path. No data for explicit messages	----	Empty	Yes	No	ARRAY
	11	Production Inhibit Time	Specifies the production inhibit timer value.	----	0	Yes	No	UINT
	12	Connection Timeout Multiplier	Specifies the multiplier for the connection timeout event.	----	Fixed to 4.	Yes	No	USINT
02 Polled I/O	01	State	Status of the Instance	----	----	Yes	No	USINT
	02	Instance Type	Type of the Instance	----	1	Yes	No	USINT
	03	Transport Class Trigger	Defines the communications type by code.	----	82 hex	Yes	No	byte
	04	Produced Connection ID	Indicates the communications ID set by the DeviceNet Master Unit.	----	----	Yes	No	UINT
	05	Consumed Connection ID	Indicates the communications ID set by the DeviceNet Master Unit.	----	----	Yes	No	UINT

Instance (hex)	Attribute (hex)	Name	Description	Setting Range	Default	Read	Write	Size
02 Polled I/O	06	Initial Comm Characteristics	Indicates the communication configuration of the DeviceNet Master Unit.	----	01 hex	Yes	No	byte
	07	Produced Connection Size	Indicates the maximum number of bytes for transmission.	----	Depends on assembly configured.	Yes	No	UINT
	08	Consumed Connection Size	Indicates the maximum number of bytes for reception.	----	Depends on assembly configured.	Yes	No	UINT
	09	Expected Packet Rate	Indicates the length of the internal processing timeout when a communications request is received. Unit is [ms]. Value is set to a multiple of [10 ms].	0 - 65535	0	Yes	Yes	UINT
	0C	Watchdog Timeout Action	Indicates the action for the internal processing timeout related to communications. 00: Retain timeout status (until reset or cleared)	----	0	Yes	No	USINT
	0D	Produced Connection Path Length	Number of bytes for the produced connection path.	----	3	Yes	No	UINT
	0E	Produced Connection Path	Specifies the allocation for the produced connection path.	----	Depends on Default Connection Path.	Yes	No	ARRAY
	0F	Consumed Connection Path Length	Number of bytes for the consumed connection path.	----	3	Yes	No	UINT
	10	Consumed Connection Path	Specifies the allocation for the consumed connection path.	----	Depends on Default Connection Path.	Yes	No	ARRAY
	11	Production Inhibit Time	Specifies the production inhibit timer value.	----	0	Yes	No	UINT
	12	Connection Timeout Multiplier	Specifies the multiplier for the connection timeout event.	----	Fixed to 4.	Yes	No	USINT

Instance (hex)	Attribute (hex)	Name	Description	Setting Range	Default	Read	Write	Size
03 Bit-Strobe	01	State	Status of the Instance	----	----	Yes	No	USINT
	02	Instance Type	Type of the Instance	----	1	Yes	No	USINT
	03	Transport Class Trigger	Defines the communications type by code.	----	82 hex	Yes	No	byte
	04	Produced Connection ID	Indicates the communications ID set by the DeviceNet Master Unit.	----	----	Yes	No	UINT
	05	Consumed Connection ID	Indicates the communications ID set by the DeviceNet Master Unit.	----	----	Yes	No	UINT
	06	Initial Comm Characteristics	Indicates the communication configuration of the DeviceNet Master Unit.	----	02 hex	Yes	No	byte
03 Bit-Strobe	07	Produced Connection Size	Indicates the maximum number of bytes for transmission.	----	Depends on configured assembly.	Yes	No	UINT
	08	Consumed Connection Size	Indicates the maximum number of bytes for reception.	----	0	Yes	No	UINT
	09	Expected Packet Rate	Indicates the length of the internal processing timeout when a communications request is received. Unit is [ms]. Value is set to a multiple of [10 ms].	0 - 65535	0	Yes	Yes	UINT
	0C	Watchdog Timeout Action	Indicates the action for the internal processing timeout related to communications. 00: Retains timeout status (until reset or cleared).	----	0	Yes	No	USINT
	0D	Produced Connection Path Length	Number of bytes for the produced connection path.	----	3	Yes	No	UINT
	0E	Produced Connection Path	Specifies the allocation for the produced connection path.	----	Default: Flexible I/O (Input) 62 39 46	Yes	No	ARRAY
	0F	Consumed Connection Path Length	Number of bytes for the consumed connection path.	----	0	Yes	No	UINT
	10	Consumed Connection Path	Specifies the allocation for the consumed connection path.	----	----	Yes	No	ARRAY
	11	Production Inhibit Time	Specifies the production inhibit timer value.	----	0	Yes	No	UINT
	12	Connection Timeout Multiplier	Specifies the multiplier for the connection timeout event.	----	Fixed to 4.	Yes	No	USINT

Instance (hex)	Attribute (hex)	Name	Description	Setting Range	Default	Read	Write	Size
04 Cyclic I/O	01	State	Status of the Instance	----	----	Yes	No	USINT
	02	Instance Type	Type of the Instance	----	1	Yes	No	USINT
	03	Transport Class Trig-ger	Defines the communications type by code.	----	82 hex	Yes	No	byte
	04	Produced Connection ID	Indicates the communica-tions ID set by the DeviceNet Master Unit.	----	----	Yes	No	UINT
	05	Consumed Connection ID	Indicates the communica-tions ID set by the DeviceNet Master Unit.	----	----	Yes	No	UINT
	06	Initial Comm Characteristics	Indicates the communication configuration of the DeviceNet Master Unit.	----	01 hex	Yes	No	byte
04 Cyclic I/O	07	Produced Connection Size	Indicates the maximum num-ber of bytes for transmission.	----	Depends on onfigured assembly.	Yes	No	UINT
	08	Consumed Connection Size	Indicates the maximum num-ber of bytes for reception.	----	0	Yes	No	UINT
	09	Expected Packet Rate	Indicates the length of the internal processing timeout when a communications request is received. Unit is [ms]. Value is set to a multiple of [10 ms].	0 - 65535	0	Yes	Yes	UINT
	0C	Watchdog Timeout Action	Indicates the action for the internal processing timeout related to communications. 00: Retain timeout status (until reset or cleared)	----	0	Yes	No	USINT
	0D	Produced Connection Path Length	Number of bytes for the pro-duced connection path.	----	3	Yes	No	UINT
	0E	Produced Connection Path	Specifies the allocation for the produced connection path.	----	Default: Flexible I/O (Input) 62 39 46	Yes	No	ARRAY
	0F	Consumed Connection Path Length	Number of bytes for the con-sumed connection path.	----	4	Yes	No	UINT
	10	Consumed Connection Path	Specifies the allocation for the consumed connection path.	----	Acknowl-edge Han-dler Object 20 2B 24 01	Yes	No	ARRAY
	11	Production Inhibit Time	Specifies the production inhibit timer value.	----	0	Yes	Yes	UINT
	12	Connection Timeout Multiplier	Specifies the multiplier for the connection timeout event.	----	Fixed to 4.	Yes	No	USINT

A-1-6 Discrete Input Point Object (Class 08 hex)

Supported Service Codes

Table A-11 Discrete Input Point Object - Supported Service Codes

Service Code No. (hex)	Service Description
0E	Reads Attribute data.
10	Writes Attribute data.

Object Details

Table A-12 Discrete Input Point Object - Object Details

Instance (hex)	Attribute (hex)	Name	Description	Setting Range	Default	Read	Write	Size
01 to 09	03	Value	Terminal state 0: OFF 1: ON	----	----	Yes	No	BOOL
	69	Override	Terminal state (Override) 0: OFF 1: ON	----	----	Yes	Yes	BOOL

Precautions for Correct Use

MX2 Instances 1 to 7 correspond to the inverter's multi-function input terminals S1 to S7.

RX Instances 1 to 8 correspond to the inverter's multi-function input terminals S1 to S8. Instance 9 corresponds to the FW input terminal.

A-1-7 Discrete Output Point Object (Class 09 hex)

Supported Service Codes

Table A-13 Discrete Output Point Object - Supported Service Codes

Service Code No. (hex)	Service Description
0E	Reads Attribute data.
10	Writes Attribute data.

Object Details

Table A-14 Discrete Output Point Object - Object Details

Instance (hex)	Attribute (hex)	Name	Description	Setting Range	Default	Read	Write	Size
01 to 06	03	Value	Terminal state 0: OFF 1: ON	----	----	Yes	Yes	BOOL

Precautions for Correct Use

MX2 Instances 1 to 3 correspond to the inverter's multi-function output terminals P1/P2 and the relay output terminal.

RX Instances 1 to 6 correspond to the inverter's multi-function output terminals P1 to P5 and the relay output terminal.

A-1-8 Unit Parameter Object (Class 94 hex)

Supported Service Codes

Table A-15 Unit Parameter Object - Supported Service Codes

Service Code No. (hex)	Service Description
0E	Reads Attribute data.
10	Writes Attribute data.

Object Details

Table A-16 Unit Parameter Object - Object Details

Instance (hex)	Attribute (hex)	Name	Description	Setting Range	Default	Read	Write	Size
01	64	Default Connection Path	0: Basic Speed I/O 1: Extended Speed I/O 2: Extended Speed and Torque Control 3: Special I/O 4: Extended Control I/O 5: Extended Control I/O and Multi function I/O Monitor 6: Flexible Format 7: Extended Speed and Acceleration Control	0 - 7	1	Yes	Yes	USINT

Precautions for Correct Use

The value written to this Instance is reflected on Assembly Instance No. (P046).

A-2 AC Drive Object Specifications

A-2-1 Motor Data Object (Class 28 hex)

Supported Service Codes

Table A-17 Motor Data Object - Supported Service Codes

Service Code No. (hex)	Service Description
0E	Reads Attribute data.
10	Writes Attribute data.

Object Details

Table A-18 Motor Data Object - Object Details

Instance (hex)	Attribute (hex)	Name	Description	Setting Range	Default	Read	Write	Size
01	03	Motor Type	3: PM synchronous motor (d060 = 3) 7: Squirrel cage induction motor (d060 ≠ 3)	----	7	Yes	Yes	USINT
	06	Motor Rated Current	Motor rated current Unit: [0.1 A]	----	Depends on the inverter type.	Yes	Yes	UINT
	07	Motor Rated Voltage	Motor rated voltage Unit: [V] Reflected on inverter parameter A082 (AVR voltage selection).	----	Depends on the inverter type.	Yes	Yes	UINT
	08	Motor Rated Power	Reflected on inverter parameter H003 (Motor Capacity).	----	Depends on the inverter type.	Yes	Yes	UINT
	09	Motor Rated Frequency	Motor rated frequency Unit: [Hz]	300 to Max. Speed	50	Yes	Yes	UINT
	0B	Max. Speed	Maximum allowable motor speed Unit: [min^{-1}]	Depends on the inverter mode (d060).	50	Yes	Yes	UINT
	0C	Pole Count	Number of motor poles (Speed conversion only) Only even numbers are valid.	0 - 38	0	Yes	Yes	UINT

A-2-2 Control Supervisor Object (Class 29 hex)

Supported Service Codes

Table A-19 Control Supervisor Object - Supported Service Codes

Service Code No. (hex)	Service Description
0E	Reads Attribute data.
10	Writes Attribute data.

Object Details

Table A-20 Control Supervisor Object - Object Details

Instance (hex)	Attribute (hex)	Name	Description	Setting Range	Default	Read	Write	Size
01	03	Forward/ Stop	0: Stop 1: Forward	----	0	Yes	Yes	BOOL
	04	Reverse/ Stop	0: Stop 1: Reverse	----	0	Yes	Yes	BOOL
	05	Net Control	0: Follow the setting of parameter A002. 1: DeviceNet reference	----	0	Yes	Yes	BOOL
	06	State	Drive status	----	----	Yes	No	UINT
	07	During Forward Run	0: Stop 1: During forward run	----	----	Yes	No	BOOL
	08	During reverse run	0: Stop 1: During reverse run	----	----	Yes	No	BOOL
	09	Inverter Ready	0: Not ready 1: Ready	----	----	Yes	No	UINT
	0A	Fault	0: Normal 1: Fault	----	----	Yes	No	BOOL
	0B	Alarm	0: Normal 1: Alarm	----	----	Yes	No	BOOL
	0C	Fault Reset	Resets the Fault/Trip state of the inverter when written to 1.	----	0	Yes	Yes	BOOL
	0D	Fault Code	Fault/Trip state code	----	----	Yes	No	UINT

Additional Information

The comparison between the inverter Error/Trip codes and the CIP Fault/Warning codes is shown in Table A-21.

Instance (hex)	Attribute (hex)	Name	Description	Setting Range	Default	Read	Write	Size
01	0F	Control From Net Run Signal Input Status	0: Follow the setting of parameter A002. 1: DeviceNet	----	----	Yes	No	BOOL
	10	DeviceNet Fault Mode	Indicates the inverter operation on network error. 0: Inverter Fault/Trip and stop (P045 = 1) 1: Ignore (P045 = 2) 2: Vendor-specific	----	2	Yes	Yes	UINT
	11	Force Fault/Trip Communications External Fault Input	Inverter's External trip (EXT) input	----	0	Yes	Yes	BOOL
	12	Force Status Communications External Fault Input Status	External trip (EXT) input status 0: Communicating 1: Fault detected	----	0	Yes	No	BOOL
	14	Net Idle Mode	Indicates the inverter operation on network idle mode. 0: Stop (P048 = 4) 1: Ignore (P048 = 2) 2: Vendor-specific	----	2	Yes	Yes	USINT
	64	Drive State Detail	Inverter Drive State Detail value: 0 : Stopping 1 : Running 2 : Jogging 3 : Free running 4 : Direct current DC braking 5 : Restart (Retry) Error detected (Decelerated stop) 7 : Restart (Retry) in process 8 : Waiting for restart (retry) 10 : Fault/Trip 11 : Undervoltage condition	----	----	Yes	No	USINT
	65	Trip Cause	Returns a direct Trip cause (E01 to E99).	----	----	Yes	No	USINT
	66	Free Run	Enables/disables free run. 0: Ignore 1: Free run enabled	----	0	Yes	Yes	BOOL

Table A-21 Error Code Conversion

Error/Trip Code		CIP Fault/Warning Code	
Code	**Name**	**Code**	**Name**
E01	Overcurrent protection at constant speed	2200	Current inside device
E02	Overcurrent protection during deceleration	2214	Overcurrent during slowdown
E03	Overcurrent protection during acceleration	2213	Overcurrent during startup
E04	Other overcurrent protection	2200	Current inside device
E05	Overload protection	2220	Continuous overcurrent
E06	Braking resistor overload protection	7112	Brake chopper overcurrent
E07	Overvoltage protection	3210	Overvoltage inside device
E08	EEPROM error	6320	Parameter error
E09	Undervoltage	3220	Undervoltage inside device
E10	Current detector error	5210	Measurement circuit
E11	CPU error	6100	Internal software
E12	External trip	9000	External malfunction
E13	USP error	9000	External malfunction
E14	Ground fault	2120	Short to ground
E15	Input overvoltage protection	3110	Trunk line overvoltage
E16	Momentary power interruption protection	3120	Trunk line undervoltage
E20	Temperature error due to cooling fan frequency lowering	4000	Temperature
E21	Temperature error	4200	Device temperature
E22	CPU error	5000	Device hardware
E24	Phase failure	3130	Phase failure
E25	Main circuit error	5410	Output stages
E30	Driver error	5400	Power section
E35	Thermistor error	7300	Sensor
E36	Braking error	9000	External malfunction
E37	Emergency disconnect	9000	External malfunction
E38	Low-speed overload protection	2221	Continuous overcurrent 1
E40	Operator connection error	5300	Operator control circuit
E41	Modbus communication error	7500	Communications
E60	Option error (Inverter communications error)	7510	Serial interface 1
E61	Option error (Duplicated MAC ID)	7510	Serial interface 1
E62	Option error (External trip)	7510	Serial interface 1
E63	DRT/CRT communications lost/idle	7510	Serial interface 1
E64	Illegal flexible mapping	6320	Parameter error
E65	Option error (Reserved)	7510	Serial interface 1
E66	Option error (Reserved)	7510	Serial interface 1
E67	Option error (Reserved)	7510	Serial interface 1
E68	Option error (Reserved)	7510	Serial interface 1
E69	Option error (Inverter communications lost error)	7510	Serial interface 1
E70	Option error (Inverter communications error)	7510	Serial interface 2
E71	Option error (Duplicated MAC ID)	7510	Serial interface 2
E72	Option error (External trip)	7510	Serial interface 2
E73	DRT/CRT communications lost/idle	7510	Serial interface 2
E74	Illegal flexible mapping	6320	Parameter error
E75	Option error (Reserved)	7510	Serial interface 2
E76	Option error (Reserved)	7510	Serial interface 2
E77	Option error (Reserved)	7510	Serial interface 2
E78	Option error (Reserved)	7510	Serial interface 2
E79	Option error (Inverter communications lost error)	7510	Serial interface 2
E80	Encoder disconnection	7305	Incremental encoder 1 defective

MX2

RX

Error/Trip Code		CIP Fault/Warning Code	
Code	**Name**	**Code**	**Name**
E81	Excessive speed	8401	Velocity following error
E82	Positioning error	8500	Positioning error
E83	Position control range trip	8501	Position following error

A-2-3 AC/DC Drive Object (Class 2A hex)

Supported Service Codes

Table A-22 AC/DC Drive Object - Supported Service Codes

Service Code No. (hex)	Service Description
0E	Reads Attribute data.
10	Writes Attribute data.

Object Details

Table A-23 AC/DC Drive Object - Object Details

Instance (hex)	Attribute (hex)	Name	Description	Setting Range	Default	Read	Write	Size
01	03	At Reference	0: Stopping/Accelerating or decelerating 1: At reference	----	----	Yes	No	BOOL
	04	Net Reference	Speed reference selection 0: Follow the setting of parameter A002. 1: Network control	0 - 1	0	Yes	Yes	BOOL
	06	Drive Mode	0: Vendor-specific mode	0	0	Yes	No	USINT
	07	Speed Actual	If parameter P049 (Number of Poles for Rotation Speed Setting) is set appropriately, the rotational speed unit is [min^{-1}]. If parameter P049 (Number of Poles for Rotation Speed Setting) is set to 0, the frequency unit is [0.01 Hz].	----	----	Yes	No	INT
	08	Speed Reference	If parameter P049 (Number of Poles for Rotation Speed Setting) is set appropriately, the rotational speed unit is [min^{-1}]. If parameter P049 (Number of Poles for Rotation Speed Setting) is set to 0, the frequency unit is [0.01 Hz].	0 - Max. Speed	0	Yes	Yes	INT
	09	Current Actual	Output current monitor Unit: [0.1 A]	----	----	Yes	No	INT

Instance (hex)	Attribute (hex)	Name	Description	Setting Range	Default	Read	Write	Size
01	0F	Power Actual	Output power monitor Unit: [W]	----	----	Yes	No	INT
	11	Output Voltage	Output voltage monitor Unit: [V]	----	----	Yes	No	INT
	12	Accel Time	Unit: [ms]	10 - 3600000	10000	Yes	Yes	UINT
	13	Decel Time	Unit: [ms]	10 - 3600000	10000	Yes	Yes	UINT
	1D	Reference From the Net	Speed reference input selection monitor: 0: Follow the setting of parameter A002. 1: DeviceNet	0 - 1	0	Yes	Yes	BOOL
	77	Torque Actual Rel	Actual torque monitor Unit: [%]	----	----	Yes	Yes	INT
	78	Torque Ref Rel	Reference torque Unit: [%]	0 - 200	0	Yes	Yes	INT
	79	Torque Compensation Bias Rel	Compensation bias torque Unit: [%]	-200 - 200	0	Yes	Yes	INT
	7A	At Zero Speed	0: Non-zero speed 1: At zero speed	----	----	Yes	No	BOOL

I

Index

Index

A

Allocation areas 1-8, 1-9
allocation relay area 3-15
Allocation type 1-8, 1-9
Assembly Instance No. 3-3, 3-6, 3-9, 3-15
Assembly No. 3-3, 3-6
Attribute 5-2, 5-13
Attribute ID 5-3
Autodetect 3-28
Automatic Baud Rate Recognition 1-4
auto-tuning 4-10

B

Basic Speed I/O 1-3, 3-2, 4-2, 4-4
- AL 4-5
- FW 4-4
- FWR 4-5
- Rotation Speed Monitor 4-5
- Rotation Speed Reference 4-4
- RS 4-4

Busoff 3-4, 6-4

C

Class 5-2, 5-13
Class ID 5-3
Clear switch 3-15
CMND Instruction 5-3
communications timeout 6-4
Compare 3-21
Compare inverter parameters 3-21
Control Supervisor Object A-15
CTR 3-5
CX-Integrator 1-15, 3-14
CX-ONE 3-14

D

Device Parameters 1-15
Device Type 3-27
DeviceNet Communications Unit
- Dimensions 1-12

DeviceNet connector signals 2-14
Discrete Input Point Object A-12
Discrete Output Point Object A-12
Download 3-21
download 3-22, 3-23
Download inverter parameters 3-21

E

Editing Device Parameters 3-21
EDS file 1-15, 3-14
Enable switch 3-15
ENTER Command 5-13
error code 6-5
Explicit Message Errors 6-10
Extended Control I/O 1-3, 3-2, 3-6, 4-2, 4-13
- AL 4-14
- CFN 4-14
- CI3 to CI7 4-13
- CI8 4-13
- CO1 4-13
- CO2 4-13
- CO3 to CO5 4-13
- CR 4-13
- EXT 4-13
- FA1 4-14
- FW 4-13
- FWR 4-14
- IRDY 4-14
- MO1 4-14
- MO2 4-14
- MO3 4-15
- MO4 4-15
- MR 4-14
- Output Current Monitor 4-15
- Rotation Speed Monitor 4-15
- Rotation Speed Reference 4-14
- RS 4-13
- RV 4-13
- RVR 4-14
- Torque Actual 4-15
- Torque Compensation Bias 4-14
- Torque Reference 4-14
- WR 4-14
- ZS 4-14

Extended Control I/O and
Multi function I/O Monitor 1-3, 3-2, 3-6, 4-2, 4-15
- AL 4-16
- CFN 4-16
- FA1 4-15
- FWR 4-15
- IRDY 4-15
- MI1 to MI7 4-16
- MI8 4-16
- MO1 4-16
- MO2 4-16
- MO3 4-16
- MO4 4-16
- MR 4-16
- Output Current Monitor 4-16
- Rotation Speed Monitor 4-16
- RVR 4-15
- Torque Actual 4-16
- WR 4-15
- ZS 4-15

Extended Speed and
Acceleration Control 1-3, 3-2, 4-2, 4-7
Acceleration Time 4-7
AL 4-8
CFN 4-8
CTR 4-7
Deceleration Time 4-7
Drive Status Detail 4-9
FA1 4-8
FRS 4-7
FW 4-7
FWR 4-8
FWT 4-8
MI1 to MI7 4-8
MI8 4-8
Output Current Monitor 4-9
REF 4-7
RFN 4-8
Rotation Speed Monitor 4-9
Rotation Speed Reference 4-7
RS 4-7
RV 4-7
RVR 4-8
Trip Cause 4-9
Extended Speed and
Torque Control 1-3, 3-2, 3-6, 4-2, 4-11
AL 4-12
CFN 4-12
CTR 4-11
Drive Status 4-12
FA1 4-12
FW 4-11
FWR 4-12
IRDY 4-12
REF 4-11
RFN 4-12
Rotation Speed Monitor 4-12
Rotation Speed Reference 4-11
RS 4-11
RV 4-11
RVR 4-12
Torque Actual 4-12
Torque Reference 4-11
WR 4-12
Extended Speed I/O 1-3, 3-2, 4-2, 4-5
AL 4-6
CFN 4-6
CTR 4-5
Drive Status 4-6
FA1 4-6
FW 4-5
FWR 4-6
IRDY 4-6
REF 4-5
RFN 4-6
Rotation Speed Monitor 4-6
Rotation Speed Reference 4-5
RS 4-5
RV 4-5
RVR 4-6
WR 4-6

F

FINS command 5-3
FINS Message Errors 6-9
Fixed allocations 3-14
Flexible Format 1-3, 3-2, 3-9, 4-2, 4-20
Flexible Format I/O Allocation 4-20
Frequency Reference 4-17
Frequency reference selection 3-5
Function Code 4-17, 4-18, 6-11
Function Code Object 5-15

G

general-purpose input 3-12
general-purpose output 3-12

H

High Frequency mode 1-15

I

Identity Object A-2
IDLE 4-23
Idle Mode Detection Setting 3-4
Input Register 3-12
Input/Output Bit Data 4-19
Instance 5-2, 5-13
Instance ID 5-3
Inverter connection PCB 2-3
Inverter connector 2-2
Issuing an Explicit Message 5-6

L

LED indicators 2-2, 2-3, 2-4
Light Load Mode 1-15

M

Master Unit 1-8, 3-15
CJ1W-DRM21 1-8
CS1W-DRM21 1-8
Maximum Number of Inverter Connections 1-8
Message function 5-8
Messaging 1-4
Explicit Message 1-4, 5-2
Modbus Coil Information 4-19
Modbus communication 3-2, 3-9, 4-17
Modbus communication (Modbus-RTU) 3-11
Modbus register 3-12, 4-21
Modbus-RTU 3-11, 4-17
Module status 2-4, 3-15
Motor Data Object A-14
MS 2-4, 3-15, 6-2, 6-3

Multi-function Input Monitor 3-13
multi-function inputs 3-12
Multi-function Output Terminal Parameter 3-13
multi-function outputs 3-12

N

Net.Ctrl. 3-5
Net.Ref. 3-5
Network Communications Command Execution Enabled Flag 5-6
network configuration tool CX-Integrator 1-5
Network status 2-4, 3-15
Network Type 3-27
No. of occupied bytes 3-3, 3-6
No. of occupied words 3-16
Node Address 2-4, 3-3
NS 2-4, 3-15, 6-2, 6-4

O

Online Status 5-6
Output Register 3-12

P

Parameter 5-11
Parameter Setting Error 6-8
PM Motor mode 1-15
Poll 1-3, 1-16

R

Reading Response to an Explicit Message 5-6
REF 3-5
Register No. for DeviceNet input 4-20
Register No. for DeviceNet output 4-19
Register Number 4-17, 4-18
Remote I/O 1-3
Reset Mode 3-3
RJ45 Connector 1-15
RS485 Communications 1-15
RUN Command 4-17
RUN command selection 3-5

S

Scan List 3-15, 3-16
Scan List Configuration 3-16
Special I/O 1-3, 3-2, 3-9, 4-2, 4-17
Special Remote Input Error Codes 4-19

T

termination resistance 2-15
Torque Bias Mode 3-8, 3-11
Torque Control 3-2, 3-8, 4-10
Torque Control Function 4-10
torque reference 3-2, 4-10
Torque Reference Input Selection 3-8, 3-11

U

Unit Parameter Object A-13
Upload 3-21
upload 3-22, 3-23
Upload inverter parameters 3-21
upload/download 3-22, 3-23
User allocations 3-14, 3-16

V

vector control 4-10

OMRON Corporation **Industrial Automation Company**
Tokyo, JAPAN
Contact: www.ia.omron.com

Regional Headquarters
OMRON EUROPE B.V.
Wegalaan 67-69-2132 JD Hoofddorp
The Netherlands
Tel: (31)2356-81-300/Fax: (31)2356-81-388

OMRON ELECTRONICS LLC
One Commerce Drive Schaumburg,
IL 60173-5302 U.S.A.
Tel: (1) 847-843-7900/Fax: (1) 847-843-7787

OMRON ASIA PACIFIC PTE. LTD.
No. 438A Alexandra Road # 05-05/08 (Lobby 2),
Alexandra Technopark,
Singapore 119967
Tel: (65) 6835-3011/Fax: (65) 6835-2711

OMRON (CHINA) CO., LTD.
Room 2211, Bank of China Tower,
200 Yin Cheng Zhong Road,
PuDong New Area, Shanghai, 200120, China
Tel: (86) 21-5037-2222/Fax: (86) 21-5037-2200

Authorized Distributor:

© OMRON Corporation 2012 All Rights Reserved.
In the interest of product improvement,
specifications are subject to change without notice.

Cat. No. I581-E1-03 1012

Mouser Electronics

Authorized Distributor

Click to View Pricing, Inventory, Delivery & Lifecycle Information:

Omron:
3G3AX-MX2-EIP-A

OCEAN CHIPS
Океан Электроники
Поставка электронных компонентов

Компания «Океан Электроники» предлагает заключение долгосрочных отношений при поставках импортных электронных компонентов на взаимовыгодных условиях!

Наши преимущества:

- Поставка оригинальных импортных электронных компонентов напрямую с производств Америки, Европы и Азии, а так же с крупнейших складов мира;
- Широкая линейка поставок активных и пассивных импортных электронных компонентов (более 30 млн. наименований);
- Поставка сложных, дефицитных, либо снятых с производства позиций;
- Оперативные сроки поставки под заказ (от 5 рабочих дней);
- Экспресс доставка в любую точку России;
- Помощь Конструкторского Отдела и консультации квалифицированных инженеров;
- Техническая поддержка проекта, помощь в подборе аналогов, поставка прототипов;
- Поставка электронных компонентов под контролем ВП;
- Система менеджмента качества сертифицирована по Международному стандарту ISO 9001;
- При необходимости вся продукция военного и аэрокосмического назначения проходит испытания и сертификацию в лаборатории (по согласованию с заказчиком);
- Поставка специализированных компонентов военного и аэрокосмического уровня качества (Xilinx, Altera, Analog Devices, Intersil, Interpoint, Microsemi, Actel, Aeroflex, Peregrine, VPT, Syfer, Eurofarad, Texas Instruments, MS Kennedy, Miteq, Cobham, E2V, MA-COM, Hittite, Mini-Circuits, General Dynamics и др.);

Компания «Океан Электроники» является официальным дистрибьютором и эксклюзивным представителем в России одного из крупнейших производителей разъемов военного и аэрокосмического назначения «**JONHON**», а так же официальным дистрибьютором и эксклюзивным представителем в России производителя высокотехнологичных и надежных решений для передачи СВЧ сигналов «**FORSTAR**».

AVIC JONHON

«JONHON» (основан в 1970 г.)

Разъемы специального, военного и аэрокосмического назначения:

(Применяются в военной, авиационной, аэрокосмической, морской, железнодорожной, горно- и нефтедобывающей отраслях промышленности)

«FORSTAR» (основан в 1998 г.)

ВЧ соединители, коаксиальные кабели, кабельные сборки и микроволновые компоненты:

(Применяются в телекоммуникациях гражданского и специального назначения, в средствах связи, РЛС, а так же военной, авиационной и аэрокосмической отраслях промышленности).

FORSTAR®

Телефон: 8 (812) 309-75-97 (многоканальный)
Факс: 8 (812) 320-03-32
Электронная почта: ocean@oceanchips.ru
Web: http://oceanchips.ru/
Адрес: 198099, г. Санкт-Петербург, ул. Калинина, д. 2, корп. 4, лит. А