EAO – Your Expert Partner for
Human Machine Interfaces

EAO Product Information

Series 84

eao

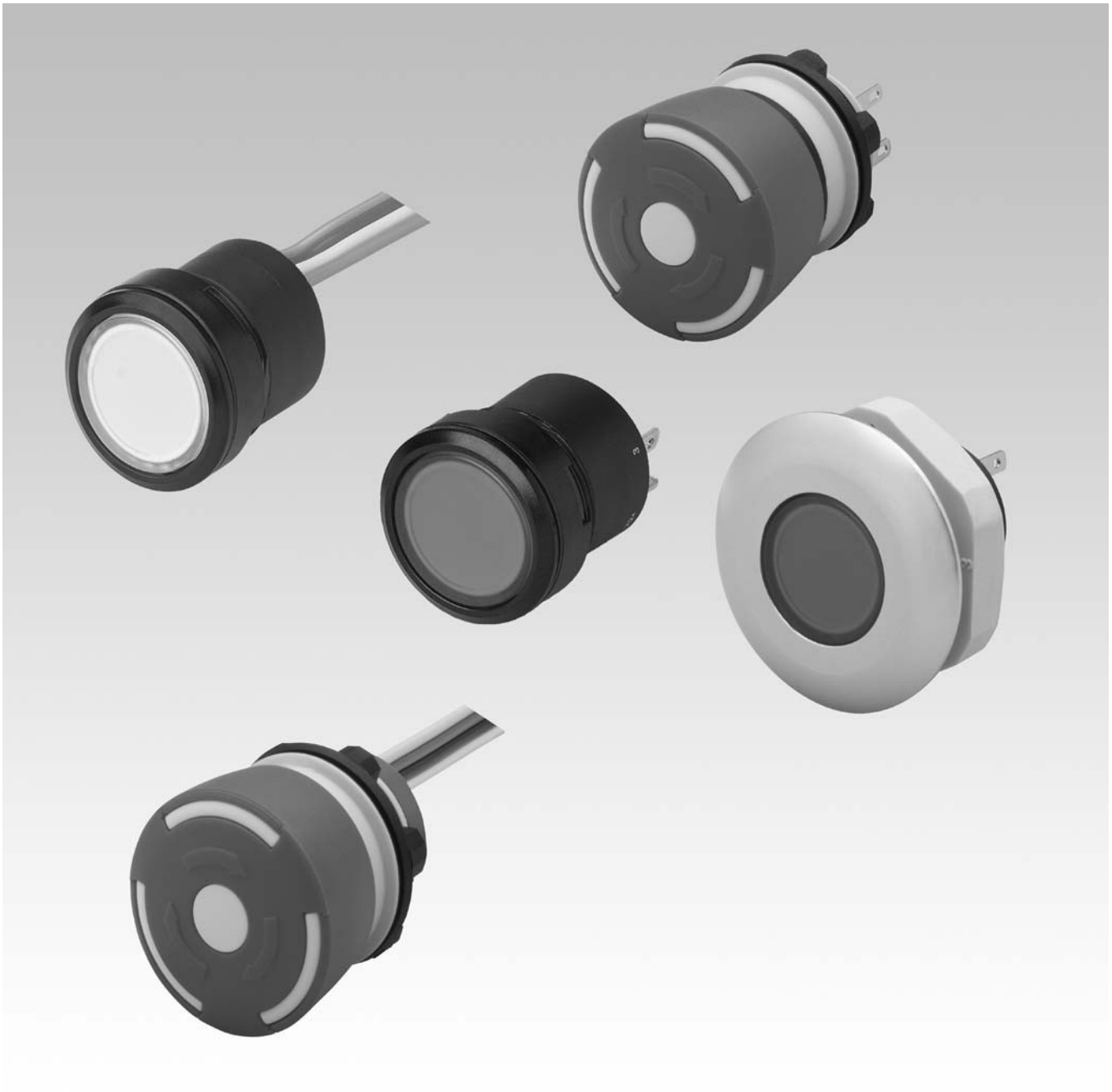

Contents

Description 3

Product Assembly 4

Mounting instruction 6

Devices raised mounting 7

Devices flush mounting 9

Accessories 13

Technical Data 27

Application guidelines 30

Drawings 31

Index 45

Product Information

General notes
The Series 84 consists of indicators, pushbuttons and emergency-stop switches. The indicators and pushbuttons are a modular system of lens, actuator, switching element and a variety of means of connection and mounting. Different front protection of IP 67, IP 65 or IP 40 ensure that the pushbuttons are suited for industrial use.
Anodized aluminium parts can have visible variations due production-technical reasons.

Mounting
The actuators of the Series 84 are inserted in a 22.5 mm diameter mounting hole and the switching units are clipped on to the rear of the actuators. The pushbutton system can be mounted as a complete unit (actuator and switching unit). Mounting from the front with the wiring already attached is also possible.
When mounted on printed circuit boards the actuators are inserted in the mounting hole 22.5 mm dia. and the switching elements are fixed on the board. The printed circuit board is connected to the preassembled actuator by means of the mounting flange. There is no need for subsequent adjustment or spacing studs.

Lenses
The lenses are available in various colours and made either from plastic or anodized aluminium.

Marking
The marking plates of the Series 84 can be marked by engraving or hot stamping.
Specific symbols and markings are available on request.
The lenses are without holder not engravable, since by mounting no accurate position of the engraving text is reached.

Illumination
To ensure full illumination, the switching elements can be supplied with integrated single LEDs in the colours red, orange, yellow, green, blue or white. The series resistor is integrated.
Luminosity and wave length scattering caused by the technology used in the LED manufacturing processes may lead to visual differences in our products.

Emergency-stop pushbutton, foolproof
The E-stop pushbutton can be mounted in front panels with a thickness between 1 and 4 mm. It has a low behind-panel depth of 13.5 mm (max.) respectively 18.5 mm with plug-in terminlas and can be safely and easily adapted to PCBs of different heights. The front protection degree is IP 65.
Importantly, the Series 84 emergency-stop requires no additional assembly because of its single-piece 'monoblock' design.
The switch's status is clearly indicated by a black or green colour ring on the shaft, and the foolproof actuator design conforms to DIN EN ISO 13850 and EN IEC 60947.
It can be supplied with LED illumination that is visible even from the side.

Specimen order

Indicator :

- Indicator actuator, IP67	84-0100.0

Essential accessories :

- Lens plastic blue	84-7111.600
- Illumination element Single-LED blue 24VDC, plug-in terminal	84-8001.6620

or

Indicator with PCB terminal :

- Indicator actuator, IP67	84-3100.1

Essential accessories :

- Lens plastic red	84-7111.200
- Illumination element with PCB terminal	92-800.042
- Single-LED red 2.1VDC	10-2602.3202L
- Mounting flange	92-960.0

We reserve the right to modify technical data
All dimensions in mm

Indicator and pushbutton illuminative, 25 mm dia.

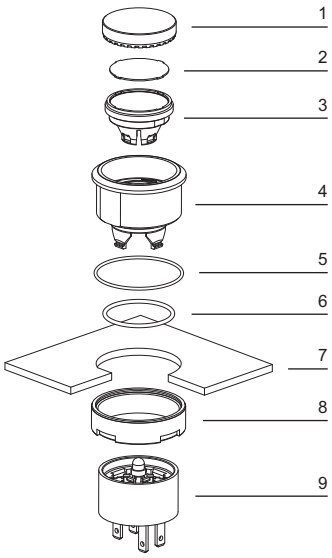

1 Lens
2 Marking plate
3 Lens holder
4 Actuator housing
5 Outer sealing
6 Inner sealing
7 Front panel
8 Fixing nut
9 Switching-/Illumination element with plug-in terminal (solderable)

Indicator and pushbutton illuminative, 40 mm dia.

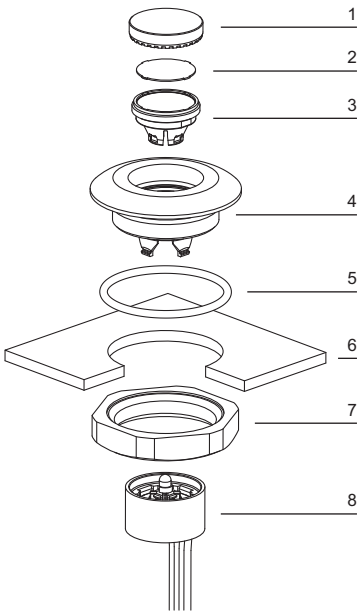

1 Lens
2 Marking plate
3 Lens holder
4 Actuator housing
5 Sealing
6 Front panel
7 Fixing nut
8 Switching-/Illumination element with flat ribbon cable

Indicator and pushbutton illuminative, 25 mm dia., PCB version

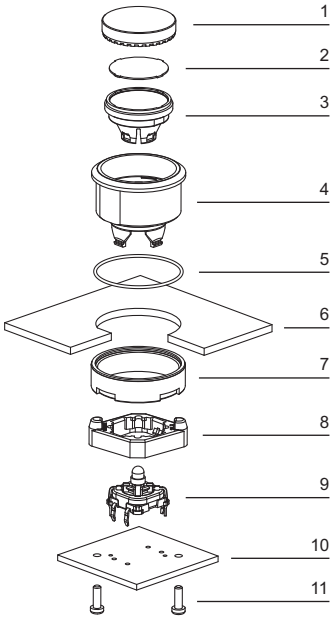

1 Lens
2 Marking plate
3 Lens holder
4 Actuator housing
5 Sealing
6 Front panel
7 Fixing nut
8 Mounting flange
9 Switching-/Illumination element with PCB terminal
10 PCB
11 Fixing screws

Emergency-stop pushbutton

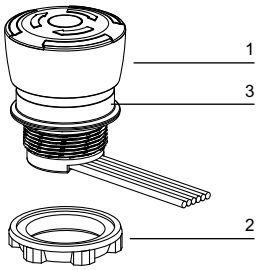

1 Emergency-stop pushbutton
2 Fixing nut
3 Position indication ring green or black

Arrangement mounting flange for switching- and illumination element, PCB mounting

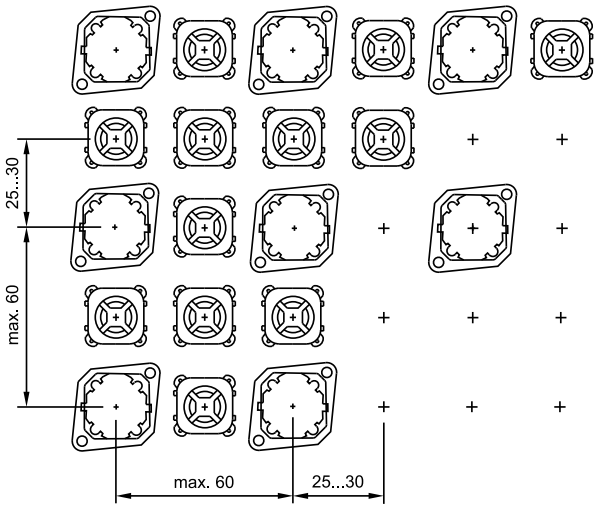

The arrangement of the mounting flanges and their number is determined by the size of the front panel or PCB. To ensure uniform, tactile switching, we recommend a layout of the flanges as per adjacent sketch.

For large PCBs with several switching elements we recommend the following procedure :

1. Fit the actuator to the front panel.
2. Clip the mounting flange to the rear of the intended actuator.
3. Screw the PCB with the components soldered to it to the assembled mounting flange.

This arrangement applies to PCBs 1.6 mm thick.

Dismantling mounting flange

The tool 84-998 must be used for removing the mounting flange from the actuator. Before removing the flange, the PCB fixing srews must be loosened.

Emergency-stop pushbutton, foolproof EN IEC 60947-5-5, complete

Application as per DIN EN ISO 13850 and EN 60204-1

	Front protection	Switching action	Mushroom had cap	Illumination	Terminals	Contacts	Ø 32 mm Typ-Nr.	Component layout	Mounting dimensions	Technical drawing	Circuit drawing	kg
Emergency-stop pushbutton, foolproof EN IEC 60947-5-5, complete Position indication ring black Twist to unlock clockwise	IP 65	MA	Plastic red	without	FR	1 NC	**84-5020.0040**	2	2	17	8	0.036
						1 NC + 1 NO	**84-5030.0040**	2	2	17	9	0.036
						2 NC	**84-5040.0040**	2	2	17	10	0.036
					PT 2.8 s	1 NC	**84-5020.0020**	1	2	17	8	0.028
						1 NC + 1 NO	**84-5030.0020**	1	2	17	9	0.028
						2 NC	**84-5040.0020**	1	2	17	10	0.028
Position indication ring black Twist to unlock clockwise LED operating voltage: 5 ... 30 VDC Current consumption: 9.7 ...12.4 mA	IP 65	MA	Plastic red	LED red	FR	1 NC	**84-5021.2B40**	2	2	17	11	0.036
						1 NC + 1 NO	**84-5031.2B40**	2	2	17	12	0.036
						2 NC	**84-5041.2B40**	2	2	17	13	0.036
					PT 2.8 s	1 NC	**84-5021.2B20**	1	2	17	11	0.028
						1 NC + 1 NO	**84-5031.2B20**	1	2	17	12	0.028
						2 NC	**84-5041.2B20**	1	2	17	13	0.028
Position indication ring green Twist to unlock clockwise	IP 65	MA	Plastic red	without	FR	1 NC	**84-5120.0040**	2	2	17	8	0.036
						1 NC + 1 NO	**84-5130.0040**	2	2	17	9	0.036
						2 NC	**84-5140.0040**	2	2	17	10	0.036
					PT 2.8 s	1 NC	**84-5120.0020**	1	2	17	8	0.028
						1 NC + 1 NO	**84-5130.0020**	1	2	17	9	0.028
						2 NC	**84-5140.0020**	1	2	17	10	0.028
Position indication ring green Twist to unlock clockwise LED operating voltage: 5 ... 30 VDC Current consumption: 9.7 ... 12.4 mA	IP 65	MA	Plastic red	LED red	FR	1 NC	**84-5121.2B40**	2	2	17	11	0.036
						1 NC + 1 NO	**84-5131.2B40**	2	2	17	12	0.036
						2 NC	**84-5141.2B40**	2	2	17	13	0.036
					PT 2.8 s	1 NC	**84-5121.2B20**	1	2	17	10	0.028
						1 NC + 1 NO	**84-5131.2B20**	1	2	17	12	0.028
						2 NC	**84-5141.2B20**	1	2	17	13	0.028

Standard version:
Flat ribbon-cable length 300 mm; Plug-in terminal 2.8 x 0.5 mm.
Other options on request:
Customisation of flat ribbon-cable and connectors.
Switching action: MA = Maintained action
Terminals: FR = Flat ribbon cable, PT 2.8 s = Plug-in terminal 2.8 mm (solderable)
Contacts: NC = Normally closed, NO = Normally open
Component layout from page 31, Mounting dimensions from page 34, Technical drawing from page 35, Circuit drawing from page 43

Stop pushbutton grey, complete

	Front protection	Switching action	Mushroom had cap	Illumination	Terminals	Contacts	Ø 32 mm Typ-Nr.	Component layout	Mounting dimensions	Technical drawing	Circuit drawing	kg
Stop pushbutton grey, complete Position indication ring black Twist to unlock clockwise	IP 65	MA	Plastic grey	without	FR	1 NC	**84-6820.0040**	2	2	17	8	0.036
						1 NC + 1 NO	**84-6830.0040**	2	2	17	9	0.036
						2 NC	**84-6840.0040**	2	2	17	10	0.036
					PT 2.8 s	1 NC	**84-6820.0020**	1	2	17	8	0.028
						1 NC + 1 NO	**84-6830.0020**	1	2	17	9	0.028
						2 NC	**84-6840.0020**	1	2	17	10	0.028
Position indication ring black Twist to unlock clockwise LED operating voltage: 5 ... 30 VDC Current consumption: 9.7 ...12.4 mA	IP 65	MA	Plastic grey	LED red	FR	1 NC	**84-6821.2B40**	2	2	17	11	0.036
						1 NC + 1 NO	**84-6831.2B40**	2	2	17	12	0.036
						2 NC	**84-6841.2B40**	2	2	17	13	0.036
					PT 2.8 s	1 NC	**84-6821.2B20**	1	2	17	11	0.028
						1 NC + 1 NO	**84-6831.2B20**	1	2	17	12	0.028
						2 NC	**84-6841.2B20**	1	2	17	13	0.028

Standard version:
Flat ribbon-cable length 300 mm; Plug-in terminal 2.8 x 0.5 mm.
Other options on request:
Customisation of flat ribbon-cable and connectors.
Switching action: MA = Maintained action
Terminals: FR = Flat ribbon cable, PT 2.8 s = Plug-in terminal 2.8 mm (solderable)
Contacts: NC = Normally closed, NO = Normally open
Component layout from page 31, Mounting dimensions from page 34, Technical drawing from page 35, Circuit drawing from page 43

Indicator actuator

Illuminated lens, non-illuminated bezel

Essential Accessories:

- Illumination element page 17
- Lens plastic page 13

	Front protection	Front ring	Ø 25 mm Typ-Nr.	Mounting dimensions	Technical drawing	kg
Indicator actuator	IP 40	Plastic black	**84-3100.0**	1	16	0.004
	IP 67	Aluminium natural	**84-0200.7**	1	16	0.008
		Plastic black	**84-0100.0**	1	16	0.003

Mounting dimensions from page 34, Technical drawing from page 35

Illuminated pushbutton actuator

Illuminated lens, non-illuminated bezel

Essential Accessories:

- Lens plastic page 13
- Switching element illuminated page 19

	Switching action	Front protection	Front ring	Ø 40 mm Typ-Nr.	Ø 25 mm Typ-Nr.	Mounting dimensions	Technical drawing	Circuit drawing	kg
Illuminated pushbutton actuator	M	IP 67	Aluminium natural	**84-1221.7**		3	18	4	0.022
		IP 40	Plastic black		**84-2101.0**	1	16	4	0.004
		IP 67	Aluminium black		**84-1201.0**	1	16	4	0.008
			Aluminium blue		**84-1201.6**	1	16	4	0.008
			Aluminium gold		**84-1201.4**	1	16	4	0.008
			Aluminium natural		**84-1201.7**	1	16	4	0.008
			Aluminium olive-green		**84-1201.5**	1	16	4	0.008
			Aluminium red		**84-1201.2**	1	16	4	0.008
			Plastic black		**84-1101.0**	1	16	4	0.003

Switching action: M = Momentary action
Mounting dimensions from page 34, Technical drawing from page 35, Circuit drawing from page 43

Pushbutton actuator

Non-illuminated lens and bezel

Essential Accessories:

- Lens metal page 14
- Switching element non-illuminated page 20

	Front protection	Switching action	Front ring	Ø 40 mm Typ-Nr.	Ø 25 mm Typ-Nr.	Mounting dimensions	Technical drawing	Circuit drawing	kg
Pushbutton actuator	IP 67	M	Aluminium natural	**84-1221.7**		3	18	4	0.022
	IP 40	M	Plastic black		**84-2101.0**	1	16	4	0.004
	IP 67	M	Aluminium black		**84-1201.0**	1	16	4	0.008
			Aluminium blue		**84-1201.6**	1	16	4	0.008
			Aluminium gold		**84-1201.4**	1	16	4	0.008
			Aluminium natural		**84-1201.7**	1	16	4	0.008
			Aluminium olive-green		**84-1201.5**	1	16	4	0.008
			Aluminium red		**84-1201.2**	1	16	4	0.008
			Plastic black		**84-1101.0**	1	16	4	0.003

Switching action: M = Momentary action
Mounting dimensions from page 34, Technical drawing from page 35, Circuit drawing from page 43

Indicator actuator with ring illumination (illuminated bezel)

Essential Accessories:

- Illumination element page 17
- Lens metal for Ring illumination page 14

	Front protection	Front ring	Ø 25 mm Typ-Nr.	Mounting dimensions	Technical drawing	kg
Indicator actuator with ring illumination (illuminated bezel)	IP 67	Plastic translucent	**84-0090.7**	1	16	0.006

Accessories for ring illumination:
Essential lenses Typ-Nr. 84-7202.x00A and 84-7205.x00A
Bi-colour illumination elements are not recommended.
Mounting dimensions from page 34, Technical drawing from page 35

Pushbutton actuator with ring illumination (illuminated bezel)

Essential Accessories:

- Lens metal for Ring illumination page 14
- Switching element illuminated page 19

	Switching action	Front protection	Front ring	Ø 25 mm Typ-Nr.	Mounting dimensions	Technical drawing	Circuit drawing	kg
Pushbutton actuator with ring illumination (illuminated bezel)	M	IP 67	Plastic translucent	**84-1091.7**	1	16	4	0.006

Accessories for ring illumination:
Essential lenses Typ-Nr. 84-7202.x00A and 84-7205.x00A
Bi-colour switching elements are not recommended.
Switching action: M = Momentary action
Mounting dimensions from page 34, Technical drawing from page 35, Circuit drawing from page 43

Indicator actuator with ring illumination (illuminated multi-colour bezel)

Essential Accessories:

- Illumination element PCB mounting page 21
- Lens plastic page 13
- Mounting flange page 21
- Single-LED page 22

	Front protection	Front ring	Ø 25 mm Typ-Nr.	Mounting dimensions	Technical drawing	kg
Indicator actuator with ring illumination (illuminated multi-colour bezel)	IP 67	Plastic transparent	**84-0080.7**	1	16	0.006

Mounting dimensions from page 34, Technical drawing from page 35

Pushbutton actuator with ring illumination (illuminated multi-colour bezel)

Essential Accessories:

- Lens plastic page 13
- Mounting flange page 21
- Single-LED page 22
- Switching element PCB mounting illuminative page 21

	Switching action	Front protection	Front ring	Ø 25 mm Typ-Nr.	Mounting dimensions	Technical drawing	Circuit drawing	kg
Pushbutton actuator with ring illumination (illuminated multi-colour bezel)	M	IP 67	Plastic transparent	**84-1081.7**	1	16	4	0.006

Switching action: M = Momentary action
Mounting dimensions from page 34, Technical drawing from page 35, Circuit drawing from page 43

Front

Lens plastic

	Mounting type	Lens	Ø 25 mm Typ-Nr.	kg
Lens plastic flush - level, illuminative	level with bezel	blue transparent	**84-7111.600**	0.001
		colourless transparent	**84-7111.700**	0.001
		green transparent	**84-7111.500**	0.001
		orange transparent	**84-7111.300**	0.001
		red transparent	**84-7111.200**	0.001
		yellow transparent	**84-7111.400**	0.001
flush - level, non-illuminative	level with bezel	black opaque	**84-7121.000**	0.001
	level with bezel	grey opaque	**84-7121.800**	0.001
flush - raised, illuminative	raised above bezel	blue transparent	**84-7115.600**	0.001
		colourless transparent	**84-7115.700**	0.001
		green transparent	**84-7115.500**	0.001
		orange transparent	**84-7115.300**	0.001
		red transparent	**84-7115.200**	0.001
		yellow transparent	**84-7115.400**	0.001
flush - raised, non-illuminative	raised above bezel	black opaque	**84-7125.000**	0.001
		grey opaque	**84-7125.800**	0.001

Marking plate for lens plastic

can be hot stamped

	Marking plate	Typ-Nr.	kg
Marking plate for lens plastic	Plastic colourless transparent	**61-9707.7**	0.001

Lens plastic with symbol

	Mounting type	Symbol	Lens	Ø 25 mm Typ-Nr.	kg
Lens plastic with symbol flush - level, illuminative	level with bezel	ON/OFF	blue transparent	**84-7111.602**	0.002
			colourless transparent	**84-7111.702**	0.002
			green transparent	**84-7111.502**	0.002
			red transparent	**84-7111.202**	0.002
		Ring	blue transparent	**84-7111.601**	0.002
			colourless transparent	**84-7111.701**	0.002
			green transparent	**84-7111.501**	0.002
			orange transparent	**84-7111.301**	0.002
			red transparent	**84-7111.201**	0.002
			yellow transparent	**84-7111.401**	0.002
		Stand by	blue transparent	**84-7111.603**	0.002
			colourless transparent	**84-7111.703**	0.002
			green transparent	**84-7111.503**	0.002
			red transparent	**84-7111.203**	0.002

The silvery coat is being applied on the lens (screen print) with an additional protective lacquer.

Lens metal

	Mounting type	Lens	Ø 25 mm Typ-Nr.	kg
Lens metal convex - level, non-illuminative	level with bezel	Aluminium black	**84-7202.000**	0.003
		Aluminium blue	**84-7202.600**	0.003
		Aluminium gold	**84-7202.400**	0.003
		Aluminium natural	**84-7202.800**	0.003
		Aluminium olive-green	**84-7202.500**	0.003
		Aluminium red	**84-7202.200**	0.003
flush - level, non-illuminative	level with bezel	Aluminium black	**84-7201.000**	0.003
		Aluminium blue	**84-7201.600**	0.003
		Aluminium gold	**84-7201.400**	0.003
		Aluminium natural	**84-7201.800**	0.003
		Aluminium olive-green	**84-7201.500**	0.003
		Aluminium red	**84-7201.200**	0.003
flush - raised, non-illuminative	raised above bezel	Aluminium black	**84-7205.000**	0.003
		Aluminium blue	**84-7205.600**	0.003
		Aluminium gold	**84-7205.400**	0.003
		Aluminium natural	**84-7205.800**	0.003
		Aluminium olive-green	**84-7205.500**	0.003
		Aluminium red	**84-7205.200**	0.003

Lens metal for Ring illumination

	Mounting type	Lens	Ø 25 mm Typ-Nr.	kg
Lens metal for Ring illumination convex - raised, non-illuminative	raised above bezel	Aluminium black	**84-7202.000A**	0.004
		Aluminium blue	**84-7202.600A**	0.004
		Aluminium gold	**84-7202.400A**	0.004
		Aluminium natural	**84-7202.800A**	0.004
		Aluminium olive-green	**84-7202.500B**	0.004
		Aluminium red	**84-7202.200A**	0.004
flush - raised, non-illuminative	raised above bezel	Aluminium black	**84-7205.000A**	0.003
		Aluminium blue	**84-7205.600A**	0.003
		Aluminium gold	**84-7205.400A**	0.003
		Aluminium natural	**84-7205.800A**	0.003
		Aluminium olive-green	**84-7205.500A**	0.003
		Aluminium red	**84-7205.200A**	0.003

Lens metal with spot

	Mounting type	Lens	Ø 25 mm Typ-Nr.	kg
Lens metal with spot flush - level, illuminative	level with bezel	Aluminium black	**84-7211.000**	0.002
		Aluminium blue	**84-7211.600**	0.002
		Aluminium gold	**84-7211.400**	0.002
		Aluminium natural	**84-7211.800**	0.002
		Aluminium olive-green	**84-7211.500**	0.002
		Aluminium red	**84-7211.200**	0.002
flush - raised, illuminative	raised above bezel	Aluminium black	**84-7215.000**	0.002
		Aluminium blue	**84-7215.600**	0.002
		Aluminium gold	**84-7215.400**	0.002
		Aluminium natural	**84-7215.800**	0.002
		Aluminium olive-green	**84-7215.500**	0.002
		Aluminium red	**84-7215.200**	0.002

Mushroom-head cap

	Mushroom had cap	Ø 32 mm Typ-Nr.	kg
Mushroom-head cap	Plastic black opaque	**84-7124.000A**	0.004
	Plastic blue opaque	**84-7124.600A**	0.004
	Plastic blue transparent	**84-7114.600A**	0.004
	Plastic green opaque	**84-7124.500A**	0.004
	Plastic red opaque	**84-7124.200A**	0.004
	Plastic yellow opaque	**84-7124.400A**	0.004

Front protective cap

for flush - level lenses only for protection IP 68

	Front protective cap	Typ-Nr.	kg
Front protective cap	Silicone natural transparent	**84-9103.7**	0.001

ATTENTION
when using the front protection cover the external sealing in the actuator has to be removed !

Legend frame

for devices 25 mm dia.

	Typ-Nr.	Technical drawing	kg
Legend frame 30 x 50 mm, adhesive, Aluminium black	**61-9980.0**	7	0.001

Technical drawing from page 35

Legend plate insert

for Legend frame 61-9980.0

	Typ-Nr.	[kg]
Legend plate insert 14.5 x 23.5 mm, adhesive, Aluminium black	**704.968.1**	0.001
14.5 x 23.5 mm, adhesive, Aluminium natural	**704.968.0**	0.001

Blind plug

	Blind plug	Typ-Nr.	Technical drawing	[kg]
Blind plug Size 25 mm dia., for mounting hole 22.5 mm dia.	Plastic black	**61-9453.0**	8	0.006
Size 36 mm dia., for mounting hole 30.5 mm dia.	Plastic black	**704.964.8**	1	0.007

Technical drawing from page 35

Backside

Illumination element

	Protection degree	Illumination	Operating voltage/-current	Terminals	Typ-Nr.	Circuit drawing	kg
Illumination element LED and built-in resistor included	IP 40	Single-LED blue	12 VDC, 10 mA	FR	**84-8001.6340**	5	0.010
				PT 2.8 s	**84-8001.6320**	5	0.005
			24 VDC, 10 mA	FR	**84-8001.6640**	5	0.010
				PT 2.8 s	**84-8001.6620**	5	0.005
		Single-LED green	12 VDC, 10 mA	FR	**84-8001.5340**	5	0.010
				PT 2.8 s	**84-8001.5320**	5	0.005
			24 VDC, 10 mA	FR	**84-8001.5640**	5	0.010
				PT 2.8 s	**84-8001.5620**	5	0.005
		Single-LED orange	12 VDC, 10 mA	FR	**84-8001.3340**	5	0.010
				PT 2.8 s	**84-8001.3320**	5	0.005
			24 VDC, 10 mA	FR	**84-8001.3640**	5	0.010
				PT 2.8 s	**84-8001.3620**	5	0.005
		Single-LED red	12 VDC, 10 mA	FR	**84-8001.2340**	5	0.010
				PT 2.8 s	**84-8001.2320**	5	0.005
			24 VDC, 10 mA	FR	**84-8001.2640**	5	0.010
				PT 2.8 s	**84-8001.2620**	5	0.005
		Single-LED white	12 VDC, 10 mA	FR	**84-8001.9340**	5	0.010
				PT 2.8 s	**84-8001.9320**	5	0.005
			24 VDC, 10 mA	FR	**84-8001.9640**	5	0.010
				PT 2.8 s	**84-8001.9620**	5	0.005
		Single-LED yellow	12 VDC, 10 mA	FR	**84-8001.4340**	5	0.010
				PT 2.8 s	**84-8001.4320**	5	0.005
			24 VDC, 10 mA	FR	**84-8001.4640**	5	0.010
				PT 2.8 s	**84-8001.4620**	5	0.005

Standard version:
Cable length 300 mm with insulated ferrule; Plug-in terminal 2.8 x 0.8 mm.
Other options on request:
Customisation of cable and connectors; Rear side fully sealed (IP 67).
Protection degree (rear side):
IP 40, upgrade to IP 67 with plug typ-Nr. 84-900 possible; With applications where strong vibrations occure, the plugs may become loose.
Terminals: FR = Flat ribbon cable, PT 2.8 s = Plug-in terminal 2.8 mm (solderable)
Circuit drawing from page 43

Illumination element with Bi-colour illumination

	Illumination	Operating voltage/-current	Protection degree	Terminals	Typ-Nr.	Circuit drawing	kg
Illumination element with Bi-colour illumination LED and built-in resistor included	Bi-colour LED red/green	24 VDC, 20 mA	IP 40	PT 2.8 s	**84-8005.8620**	1	0.005
			IP 67	FR	**84-8005.8640**	2	0.011
	Bi-colour LED yellow/green	24 VDC, 20 mA	IP 40	PT 2.8 s	**84-8005.7620**	1	0.005
			IP 67	FR	**84-8005.7640**	2	0.011

Standard version:
Cable length 300 mm with insulated ferrule; Plug-in terminal 2.8 x 0.8 mm.
Other options on request:
Customisation of cable and connectors; Rear side fully sealed (IP 67).
Best illumination level will be reached with Alu lens with window, Typ-Nr. 84-7215.x00 and 84-7211.x00.
Protection degree (rear side):
- Plug-in terminal IP 40, upgrade to IP 67 with plug typ-Nr. 84-900 possible. With applications where strong vibrations occure, the plugs may become loose.
- Cabel connection IP 67, rear side fully sealed. The illumination element of the cable version cannot be disconnected from the actuator any longer.
Terminals: PT 2.8 s = Plug-in terminal 2.8 mm (solderable), FR = Flat ribbon cable
Circuit drawing from page 43

Switching element illuminated

	Protection degree	Contacts	Illumination	Operating voltage/-current	Terminals	Typ-Nr.	Circuit drawing	kg
Switching element illuminated LED and built-in resistor included	IP 40	1 NO	Single-LED blue	12 VDC, 10 mA	FR	**84-8511.6340**	7	0.015
					PT 2.8 s	**84-8511.6320**	7	0.006
				24 VDC, 10 mA	FR	**84-8511.6640**	7	0.015
					PT 2.8 s	**84-8511.6620**	7	0.006
			Single-LED green	12 VDC, 10 mA	FR	**84-8511.5340**	7	0.015
					PT 2.8 s	**84-8511.5320**	7	0.006
				24 VDC, 10 mA	FR	**84-8511.5640**	7	0.015
					PT 2.8 s	**84-8511.5620**	7	0.006
			Single-LED orange	12 VDC, 10 mA	FR	**84-8511.3340**	7	0.015
					PT 2.8 s	**84-8511.3320**	7	0.006
				24 VDC, 10 mA	FR	**84-8511.3640**	7	0.015
					PT 2.8 s	**84-8511.3620**	7	0.006
			Single-LED red	12 VDC, 10 mA	FR	**84-8511.2340**	7	0.015
					PT 2.8 s	**84-8511.2320**	7	0.006
				24 VDC, 10 mA	FR	**84-8511.2640**	7	0.015
					PT 2.8 s	**84-8511.2620**	7	0.006
			Single-LED white	12 VDC, 10 mA	FR	**84-8511.9340**	7	0.015
					PT 2.8 s	**84-8511.9320**	7	0.006
				24 VDC, 10 mA	FR	**84-8511.9640**	7	0.015
					PT 2.8 s	**84-8511.9620**	7	0.006
			Single-LED yellow	12 VDC, 10 mA	FR	**84-8511.4340**	7	0.015
					PT 2.8 s	**84-8511.4320**	7	0.006
				24 VDC, 10 mA	FR	**84-8511.4640**	7	0.015
					PT 2.8 s	**84-8511.4620**	7	0.006

Standard version:
Cable length 300 mm with insulated ferrule; Plug-in terminal 2.8 x 0.8 mm.
Other options on request:
Customisation of cable and connectors; Rear side fully sealed (IP 67).
Protection degree (rear side):
IP 40, upgrade to IP 67 with plug typ-Nr. 84-900 possible; With applications where strong vibrations occure, the plugs may become loose.
Contacts: NO = Normally open
Terminals: FR = Flat ribbon cable, PT 2.8 s = Plug-in terminal 2.8 mm (solderable)
Circuit drawing from page 43

Switching element with Bi-colour illumination

	Protection degree	Contacts	Illumination	Operating voltage/-current	Terminals	Typ-Nr.	Circuit drawing	
Switching element with Bi-colour illumination LED and built-in resistor included	IP 67	1 NO	Bi-colour LED red/green	24 VDC, 20 mA	FR	**84-8515.8640**	3	0.015
			Bi-colour LED yellow/green	24 VDC, 20 mA	FR	**84-8515.7640**	3	0.015

Protection degree IP 67, rear side fully sealed. The switching element cannot be disconnected from the actuator any longer.
Best illumination level will be reached with Alu lens with window, Typ-Nr. 84-7215.x00 and 84-7211.x00.
Standard version:
Cable length 300 mm with insulated ferrule.
Other options on request:
Customisation of cable and connectors.
Contacts: NO = Normally open
Terminals: FR = Flat ribbon cable
Circuit drawing from page 43

Switching element non-illuminated

	Protection degree	Contacts	Terminals	Typ-Nr.	Circuit drawing	
Switching element non-illuminated	IP 40	1 NO	FR	**84-8510.0040**	6	0.010
			PT 2.8 s	**84-8510.0020**	6	0.005

Standard version:
Cable length 300 mm with insulated ferrule; Plug-in terminal 2.8 x 0.8 mm (solderable).
Other options on request:
Customisation of cable and connectors; Rear side fully sealed (IP 67).
Protection degree (rear side):
IP 40, upgrade to IP 67 with plug typ-Nr. 84-900 possible; With applications where strong vibrations occure, the plugs may become loose.
Contacts: NO = Normally open
Terminals: FR = Flat ribbon cable, PT 2.8 s = Plug-in terminal 2.8 mm (solderable)
Circuit drawing from page 43

Switching element PCB mounting illuminative

The customer has to decide what series resistor shall be used to the LED

	Contacts	Terminals	Typ-Nr.	Component layout	Technical drawing	Circuit drawing	kg
Switching element PCB mounting illuminative	1 NO	P	**92-851.342**	4	15	14	0.001

Illumination and mounting flange to be ordered separately.
Contacts: NO = Normally open
Terminals: P = PCB terminal
Component layout from page 31, Technical drawing from page 35, Circuit drawing from page 43

Illumination element PCB mounting

The customer has to decide what series resistor shall be used to the LED

	Terminals	Typ-Nr.	Component layout	Technical drawing	kg
Illumination element PCB mounting	P	**92-800.042**	3	9	0.001

Illumination and mounting flange to be ordered separately.
Terminals: P = PCB terminal
Component layout from page 31, Technical drawing from page 35

Mounting flange

	Typ-Nr.	Technical drawing	kg
Mounting flange Ring illumination (illuminated multi-color bezel)	**84-960.0**	13	0.001
Standard version (non-illuminated)	**92-960.0**	10	0.001

Technical drawing from page 35

Flat receptacle

	Typ-Nr.	kg
Flat receptacle 2.8 x 0.8 mm	**84-9420**	0.001

Insulation sleeve

	Typ-Nr.	kg
Insulation sleeve for Flat receptacles 84-9420	**31-929**	0.001

Plug

	Typ-Nr.	kg
Plug	**84-900**	0.001

for back protection IP67 of switching elements and illumination elements.
Two plugs are nessecary per element.

Illumination

Single-LED

The customer has to decide what series resistor shall be used to the LED

	Socket	Light colour	Operating voltage/-current	Typ-Nr.	kg
Single-LED	T1 Bi-Pin	blue	3.5 VDC, 20 mA	**10-2602.3206L**	0.001
		green	3.5 VDC, 20 mA	**10-2602.3205L**	0.001
		orange	2.1 VDC, 20 mA	**10-2602.3203L**	0.001
		red	2.1 VDC, 20 mA	**10-2602.3202L**	0.001
		white	3.5 VDC, 20 mA	**10-2602.3209L**	0.001
		yellow	2.2 VDC, 20 mA	**10-2602.3174D**	0.001

Bi-colour LED

The customer has to decide what series resistor shall be used to the LED

	Socket	Light colour	Operating voltage/-current	Typ-Nr.	kg
Bi-colour LED	T1 Bi-Pin	red/green	1.9/3.5 VDC, 20 mA	**10-2603.320AL**	0.001
		yellow/green	2.0/3.2 VDC, 20 mA	**10-2603.320CL**	0.001

Multi-LED

The customer has to decide what series resistor shall be used to the LED

	Socket	Light colour	Operating voltage/-current	Typ-Nr.	kg
Multi-LED	T1 Bi-Pin	yellow	12 VDC, 40 mA	**10-5609.3174D**	0.001

Emergency-stop and Stop pushbutton

Emergency-stop label

front panel thickness 3 mm max.

	Marking	Typ-Nr.	kg
Emergency-stop label 60 mm dia., yellow, Mounting hole size 22.5 mm dia.	ARRET D'URGENCE	**704.963.7**	0.011
	EMERGENCY STOP	**704.963.6**	0.011
	NOT AUS	**704.963.5**	0.011
	NOT HALT	**704.963.8**	0.011
90 mm dia., yellow, Mounting hole size 22.5 mm dia.	ARRET D'URGENCE	**704.963.2**	0.011
	EMERGENCY STOP	**704.963.1**	0.011
	NOT AUS	**704.963.0**	0.011
	NOT HALT	**704.963.3**	0.011

Emergency-stop protective shroud

Front panel thickness 1 ... 3 mm

	Protective shroud	Marking	Typ-Nr.	Technical drawing	kg
Emergency-stop protective shroud 45 mm dia., IP 40, mounting hole 22.5 mm dia., with anti-twist device	Metal yellow RAL 1004	without	**84-909**	12	0.021
50 mm dia., IP 65, mounting hole 22.5 mm dia., with anti-twist device	Plastic yellow	EMERGENCY STOP	**84-902B**	14	0.006
		NOT - AUS	**84-902A**	14	0.006
		NOT - HALT	**84-902D**	14	0.006
		without	**84-902**	14	0.006

Please note: By using the protective shroud Typ-Nr. 84-909 the E-stop or Stop-Switch has to be mounted twisted by 180 °. Consult the dimensional drawing therfore.
Technical drawing from page 35

Fixing nut

	Fixing nut	Typ-Nr.	kg
Fixing nut 28 mm dia., for limited-space applications	Plastic black	**84-905**	0.002
30 mm dia., standard delivery	Plastic black	**84-908**	0.002

Emergency-stop enclosures

Bottom grey similar RAL 7035; cover lead-sealable, yellow similar RAL 1004

	Dimension	Typ-Nr.	Technical drawing	kg
Emergency-stop enclosures with mounting hole 22.5 mm dia., with anti- twist device	L 65 mm, W 65 mm, H 57 mm	**84-910**	11	0.099

Openings for cable gland M16 or M20.
Protection class IP 66.
Technical drawing from page 35

Stop pushbutton enclosure

Grey similar RAL 7035; cover lead-sealable

	Dimension	Typ-Nr.	Technical drawing	kg
Stop pushbutton enclosure with mounting hole 1 x 22.5 mm dia., with anti-twist device	L 94 mm, W 94 mm, H 81 mm	**704.945.1**	2	0.211
with mounting hole 2 x 22.5 mm dia., with anti-twist device	L 130 mm, W 94 mm, H 81 mm	**704.945.2**	3	0.251
with mounting hole 3 x 22.5 mm dia., with anti-twist device	L 180 mm, W 94 mm, H 81 mm	**704.945.3**	4	0.313
with mounting hole 4 x 22.5 mm dia., with anti-twist device	L 180 mm, W 182 mm, H 110 mm	**704.945.4**	5	0.572
with mounting hole 6 x 22.5 mm dia., with anti-twist device	L 180 mm, W 182 mm, H 110 mm	**704.945.5**	6	0.568

Technical drawing from page 35

Cable gland

	Typ-Nr.	kg
Cable gland M16, Plastic grey	**61-9481.6**	0.007
M20, Plastic grey	**704.945.6**	0.011

with traction relief; protection degree IP 68.

Flat receptacle

	Typ-Nr.	kg
Flat receptacle 2.8 x 0.5 mm for Plug-in terminal	**31-946**	0.001

Insulation sleeve

	Typ-Nr.	kg
Insulation sleeve for Flat receptacles 31-946	**31-929**	0.001

Stop request pushbutton

Housing, pole mounting 35 mm dia.

	Housing	Colour	Typ-Nr.	Technical drawing	kg
Housing, pole mounting 35 mm dia.	Plastic blue	RAL 5017 traffic blue	**84-9500.6A**	19	0.035
	Plastic grey	RAL 7016	**84-9500.8**	19	0.035
	Plastic yellow	RAL 1023	**84-9500.4**	19	0.035

Screws are not contained in the scope of supply.
Technical drawing from page 35

Housing, pole mounting 38 mm dia.

	Housing	Colour	Typ-Nr.	Technical drawing	kg
Housing, pole mounting 38 mm dia.	Plastic grey	RAL 7016	**84-9600.8**	20	0.030
	Plastic yellow	RAL 1023	**84-9600.4**	20	0.030

Screws are not contained in the scope of supply.
Technical drawing from page 35

Adaptor, reducing to 30 mm dia.

	Housing	Colour	Typ-Nr.	Technical drawing	kg
Adaptor, reducing to 30 mm dia. for housing, pole mounting 35 mm dia.	Plastic grey	RAL 7016	**84-9700.8**	23	0.024
	Plastic yellow	RAL 1023	**84-9700.4**	23	0.024

Technical drawing from page 35

Adaptor, reducing to 25 mm dia.

	Housing	Colour	Typ-Nr.	Technical drawing	kg
Adaptor, reducing to 25 mm dia. for housing, pole mounting 35 mm dia.	Plastic grey	RAL 7016	**84-9300.8**	22	0.008
	Plastic yellow	RAL 1023	**84-9300.4**	22	0.008

Technical drawing from page 35

Housing, wall mounting

	Housing	Colour	Typ-Nr.	Technical drawing	kg
Housing, wall mounting	Plastic grey	RAL 7016	**84-9800.8**	21	0.024
	Plastic yellow	RAL 1023	**84-9800.4**	21	0.024

Screws are not contained in the scope of supply.
Technical drawing from page 35

Assembling

Lens remover

	Typ-Nr.	kg
Lens remover	**61-9730.0**	0.011

Mounting tool

	Typ-Nr.	kg
Mounting tool for tightening or loosening of Emergency-stop and Stop-Switch fixing nut	**84-996**	0.014
for tightening or loosening of Fixing nut, Indicator and Pushbutton	**84-997**	0.027

Dismantling tool

	Typ-Nr.	kg
Dismantling tool for actuator dismantling of switching- and illumination element and mounting flange	**84-998**	0.002

Emergency-stop

Switching system

The double-break switching system can be supplied for the following switching functions:
1 Normally closed, 2 Normally closed, 1 Normally closed + 1 Normally open.
The Normally closed contacts have forced opening according to EN IEC 60947-5-1

Material

Connection cable
Polyvinylchloride (PVC), operating temperature up to +65 °C

Mushroom-head cap
Polybutylenterephthalate (PBT), as per UL 94 V0 (red items)

Actuator housing
Polyamide (PA 66), as per UL 94 V0, Flat ribbon cable-cover Polyamide (PA 6.6), as per UL 94 V0

Material of contact
Silver alloy gold plated

Mechanical characteristics

Front panel thickness
Standard 1 ... 4 mm
with E-stop protective shroud Typ-Nr. 84-902 1 ... 3 mm

Mounting hole
22.5 mm dia. as per EN IEC 60947-5-1 with anti-twist device

Terminals
Soldering terminals 2.8 x 0.5 mm (solderable), CuSn6 tin-plated
Flat ribbon cable 2-, 4-, or 6-poles 0.35 mm² (AWG 22)

Tightening torque
Fixing nut 80 Ncm

Actuating force
22 N ±4 N

Actuating travel
approx. 4 mm to release the internal operation part

Mechanical lifetime
≥50.000 cycles of operations

Electrical characteristics

Standards
The devices comply with : EN IEC 60947-5-1, EN IEC 60947-5-5 (Emergency-stop), DIN EN ISO 13850, EN IEC 60204

Illumination
LED red with pole reversal, constant current source

Operation Voltage	5 VDC ... 30 VDC
Current consumption	9.7 mA ... 12.4 mA

Rated Operational Voltage U_e
250 VAC, as per EN IEC 60947-1

Rated Insulation Voltage U_i
250 V, as per EN IEC 60947-1

Rated Impulse Withstand Voltage U_{imp}
2.5 kV, as per EN IEC 60947-1

Contact resistance
New state ≤ 50 mΩ, as per DIN IEC 60512-2-3

Isolation resistance
$>10^{11}$ Ω between the opend contats at 500 VDC, as per DIN IEC 60512-2-10

Electrical life
≥50 000 cycles of operations (inductive cosϕ 0.4), as per EN IEC 60947-5-1

Voltage	120 VAC	240 VAC	125 VDC	250 VDC
Current	3 A	1.5 A	0.55 A	0.27 A

Reduced load ≥50'000 cycles of operations (resistive)

Voltage	1 VAC/DC	42 VAC/DC
Current	100 mA	200 mA

Conventional free air thermal current I_{th}
5 A, as per EN IEC 60947-5-1
the maximum current in continuous operation and at ambient temperature must not exceed the quoted maximum values.

Switch rating
Switch rating AC with silver contact (gold plated), service category AC-15, as per EN IEC 60947-5-1

Voltage	120 VAC	240 VAC
Current	3 A	1.5 A

Switch rating DC for silver contact (gold plated), service category DC-13, as per EN IEC 60947-5-1 (inductive)

Voltage	12 VDC	24 VDC	48 VDC	60 VDC	125 VDC	250 VDC
Current $_{Plug}$	5 A	4 A	2.1 A	1.7 A	0.55 A	0.27 A
Current $_{Cable}$	3 A	3 A	2.1 A	1.7 A	0.55 A	0.27 A

Recommended minimum operational data
Silver contacts (gold plated)

Voltage	1 VAC/DC
Current	1 mA

Electric strength
500 VAC, 50 Hz, 1 min, as per DIN IEC 60512-2

Rated conditional short-circuit current
1000 A, type of short-circuit unit 6 A gG, as per EN IEC 60947-5-1

Protection class
Class II, as per EN IEC 60947-5

Overvoltage category
II, as per EN IEC 60947-1

Degree of pollution
3, as per EN IEC 60947-1

Environmental conditions

Storage temperature
-25 °C ... +80 °C

Operating temperature
-25 °C ... +65 °C

Front protection
IP 65, as per EN IEC 60529

Shock resistance
(semi-sinusoidal)
max. 150 m/s², pulse width 11 ms, 3-axis, as per EN IEC 60068-2-27

Vibration resistance
(sinusoidal)
max. 50 m/s² at 10 Hz ... 500 Hz, 10 cycles, 3-axis, as per EN IEC 60068-2-6

Climate resistance
Damp heat, cyclic
96 hours, +25 °C / 97 %, +55 °C / 93 % relative humidity, as per EN IEC 60068-2-30

Damp heat, steady
56 days, +40 °C / 93 % relative humidity, as per EN IEC 60068-2-78

Dry heat
96 hours, +70 °C, as per EN IEC 60068-2-2

Low temperature
96 hours, -40 °C, as per EN IEC 60068-2-1

Saline mist
96 Stunden, +35 °C in chemical solution NaCl, as per EN IEC 60068-2-11

Approvals

Approbations
SEV
UL

Declaration of conformity
CE

Switching element illuminated pushbutton

Switching system

Short-travel switching system with 2 independent contact points and tactile operation.
Guarantees reliable switching even of very light loads.
Fitted with 1 normally open contact.

Material

Connection cable
Polyvinylchloride (PVC), short-time heat-resistant up to 105 °C

Material of contact
Silver alloy gold plated

Switching element
Thermoplastic polyester (PET, PBT), as per UL 94 V0 and Polyacetale (POM), as per UL 94 HB

Mechanical characteristics

Terminals
Plug-in terminals 2.8 x 0.8 mm (solderable)
Flat ribbon cable 0.5 mm²
PCB terminal

Actuating force
4.0 N ±0.2 N (measured at the lens)

Actuating travel
~0.5 mm

Rebound time
≤1 ms

Resistance to heat of soldering
260 °C, 5 s (PCB assembly)
350 °C, 10 s (when using a soldering iron)
as per EN IEC 60068-2-20

Mechanical lifetime
≥1 million cycles of operations

Electrical characteristics

Illumination
Single-Chip or Multi-Chip LED, green, orange, red, yellow, white and blue

Operation Voltage	12 VDC	24 VDC
Current consumption	40 mA	20 mA

Contact resistance
Starting value (initial) ≤100 mΩ, as per DIN IEC 60512-2

Isolation resistance
≥1 G Ω between all terminals at 100 VDC, as per DIN IEC 60512-2

Electrical life
as per EN IEC 60512-5

5 million	cycles of operation	24 VAC, 50 mA at 480 Ω
5 million	cycles of operation	24 VAC, 100 mA at 240 Ω
2 million	cycles of operation	42 VAC, 50 mA at 840 Ω
2 million	cycles of operation	42 VAC, 100 mA at 420 Ω
300 000	cycles of operation	42 VAC, 100 mA at cosϕ 0,4
250 000	cycles of operation	42 VAC, 200 mA at cosϕ 0,395
1 million	cycles of operation	12 VDC, 250 mA at 48 Ω
1 million	cycles of operation	24 VDC, 50 mA at 480 Ω
1 million	cycles of operation	24 VDC, 100 mA at 240 Ω
5 million	cycles of operation	42 VDC, 25 mA at 1680 Ω
1.5 million	cycles of operation	42 VDC, 50 mA at 840 Ω
100 000	cycles of operation	42 VDC, 100 mA at 420 Ω
500 000	cycles of operation	24 VDC, 200 mA at L/R=30 ms
300 000	cycles of operation	42 VDC, 100 mA at L/R=30 ms
100 000	cycles of operation	42 VDC, 200 mA at L/R=30 ms

Switch rating

Voltage	50 mVAC/DC ... 42 VAC/DC
Current	10 uA ... 100 mA
Power	max. 2 W

Electric strength
500 VAC, 50 Hz, 1 min, as per DIN IEC 60512-2

Environmental conditions

Storage temperature
-40 °C ... +85 °C

Operating temperature
-25 °C ... +70 °C

Protection degree
Back protection:
IP 40, standard version
IP 67, fully sealed version, with mounted actuator only.

Shock resistance
(semi-sinusoidal)
max. 100 m/s², pulse width 11 ms, 3-axis, as per EN IEC 60068-2-27

Vibration resistance
(sinusoidal)
max. 50 m/s² at 10 Hz ... 500 Hz, 10 cycles, 3-axis, as per EN IEC 60068-2-6

Actuator

Material

Lens
Polycarbonate (PC), as per UL 94 V2 or Aluminium anodised

Actuator housing
Polyetherimid (PEI), as per UL 94 V0 or Aluminium anodised

Mechanical characteristics

Mounting hole
22.5 mm dia. and 30.5 mm dia.

Tightening torque
Fixing nut max. 80 Ncm

Actuating force
4.0 N ±0.2 N (measured at the lens)

Actuating travel
Total switching travel 1.2 mm

Mechanical lifetime
≥1 million cycles of operations

Electrical characteristics

Electrostatic breakdown value

Plastic case	≥15 kV
Aluminium case	≥5 kV

as per IEC 61000-4-2, mounted in plastic front panel

Environmental conditions

Storage temperature
-40 °C ... +85 °C

Operating temperature
-25 °C ... +70 °C

Front protection
IP 67 and IP40, as per EN IEC 60529

Climate resistance
Damp heat, cyclic
96 hours, +25 °C / 97 %, +55 °C / 93 % relative humidity, as per EN IEC 60068-2-30

Damp heat, state
56 days, +40 °C / 93 % relative humidity, as per EN IEC 60068-2-78

Rapid change of temperature
100 cycles, -40 °C ... +80 °C, as per EN IEC 60068-2-14

Suppressor circuits

When switching inductive loads such as relays, DC motors, and DC solenoids, it is always important to absorb surges (e.g. with a diode) to protect the contacts. When these inductive loads are switched off, a counter emf can severely damage switch contacts and greatly shorten lifetime.

Fig. 1 shows an inductive load with a free-wheeling diode connected in parallel. This free-wheeling diode provides a path for the inductor current to flow when the current is interrupted by the switch. Without this free-wheeling diode, the voltage across the coil will be limited only by dielectric breakdown voltages of the circuit or parasitic elements of the coil. This voltage can be kilovolts in amplitude even when nominal circuit voltages are low (e.g. 12 VDC) see Fig. 2.

The free-wheeling diode should be chosen so that the reverse breakdown voltage is greater than the voltage driving the inductive load. The DC blocking voltage (VR) of the free-wheeling diode can be found in the datasheet of a diode. The forward current should be equal or greater than the maximum current flowing through the load.

To get an efficient protection, the free-wheeling diode must be connected as close as possible to the inductive load!

Switching with inductive load
Fig. 1

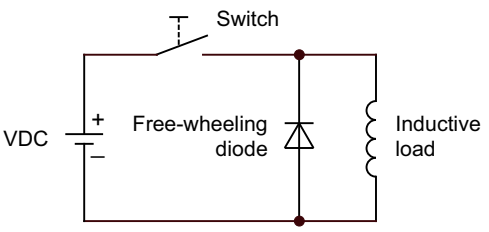

Counter emf
over load without free-wheeling diode
Fig. 2

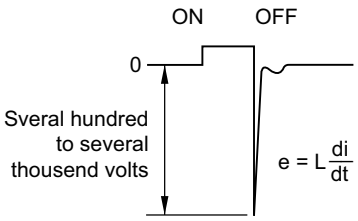

Component layout

1 Emergency-stop pushbutton, foolproof EN IEC 60947-5-5, complete page 7 **| Stop pushbutton grey, complete** page 8

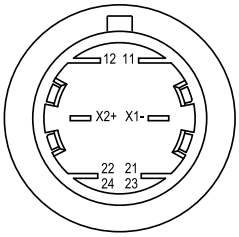

2 Emergency-stop pushbutton, foolproof EN IEC 60947-5-5, complete page 7 **| Stop pushbutton grey, complete** page 8

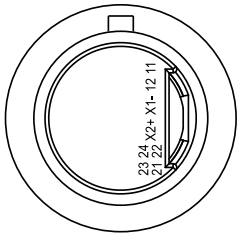

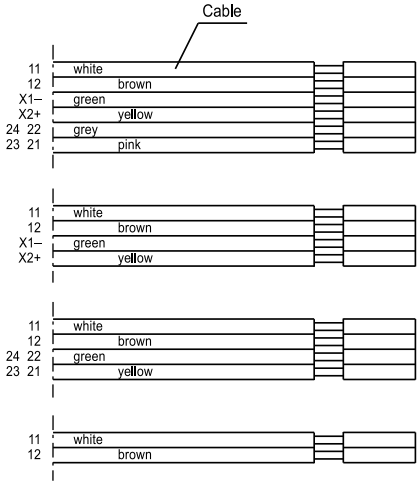

	Terminals
1 NC + 1 NO	11 / 12 + 23 / 24
2 NC	11 / 12 + 21 / 22
Illumination	X1– / X2+

	Terminals
1 NC	11 / 12
Illumination	X1– / X2+

	Terminals
1 NC + 1 NO	11 / 12 + 23 / 24
2 NC	11 / 12 + 21 / 22

	Terminals
1 NC	11 / 12

3 Illumination element PCB mounting page 21

Single-LED

Drilling plan (Elementside)

A Fixing holes for mounting flange (92-960.0)
B Holes for LED
C Holes for centering pins

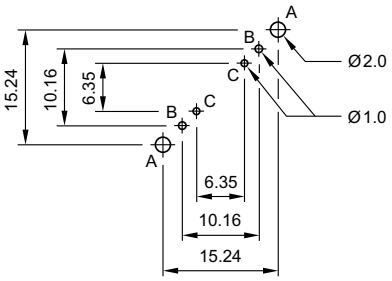

Bi-colour-LED

Drilling plan (Elementside)

A Fixing holes for mounting flange (92-960.0)
B Holes for Bi-colour LED:
BA1 (green) + BA2 (yellow or red) = Anodes, BC = Cathode
C Holes for centering pins

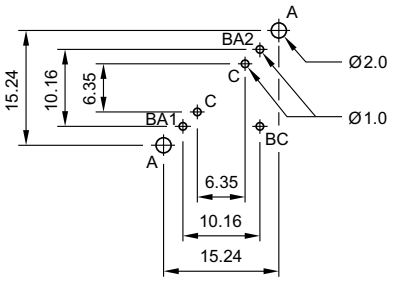

Hyper mini SMD-LED

Drilling plan (Elementside)

A Fixing holes for mounting flange (84-960.0)

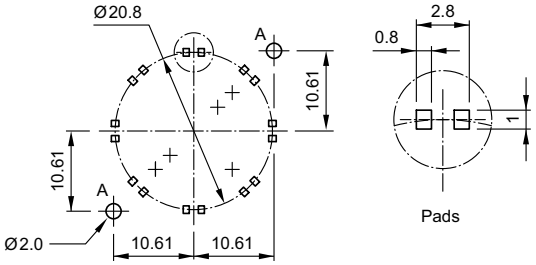

Libraries for the PCB layout-system p-cad 200X see : www.pcad.com/en/library Third-party Libraries

4 Switching element PCB mounting illuminative page 21

Single-LED

Drilling plan (Elementside)

A Fixing holes for mounting flange (92-960.0)
B Holes for LED
C Holes for contact pins
Pad max. Ø 2.5 mm
Through-connection recommended

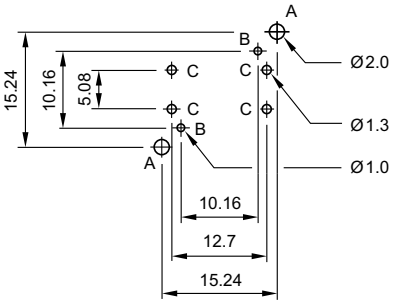

Bi-colour-LED

Drilling plan (Elementside)

A Fixing holes for mounting flange (92-960.0)
B Holes for Bi-colour LED:
BA1 (green) + BA2 (yellow or red) = Anodes, BK = Cathode
C Holes for contact pins
Pad max. Ø 2.5 mm
Through-connection recommended

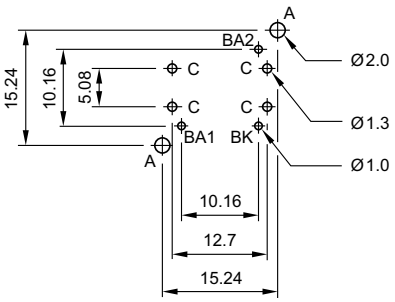

Hyper mini SMD-LED

Drilling plan (Elementside)

A Fixing holes for mounting flange (84-960.0)

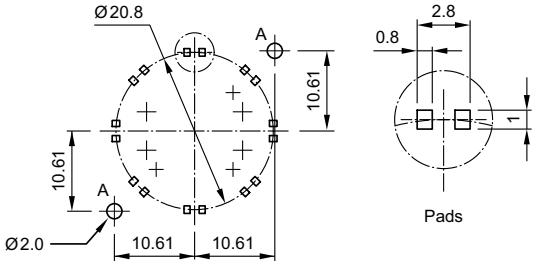

Libraries for the PCB layout-system p-cad 200X see : www.pcad.com/en/library Third-party Libraries

Mounting dimensions

1 Indicator actuator page 9 **| Illuminated pushbutton actuator** page 9 **| Pushbutton actuator** page 10 **| Indicator actuator with ring illumination (illuminated bezel)** page 10 **| Pushbutton actuator with ring illumination (illuminated bezel)** page 11 **| Indicator actuator with ring illumination (illuminated multi-colour bezel)** page 11 **| Pushbutton actuator with ring illumination (illuminated multi-colour bezel)** page 12

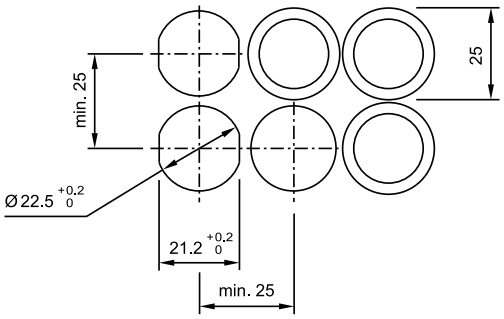

Hole spacing 31 mm min. by using blind plug 704.960.4

2 Emergency-stop pushbutton, foolproof EN IEC 60947-5-5, complete page 7 **| Stop pushbutton grey, complete** page 8

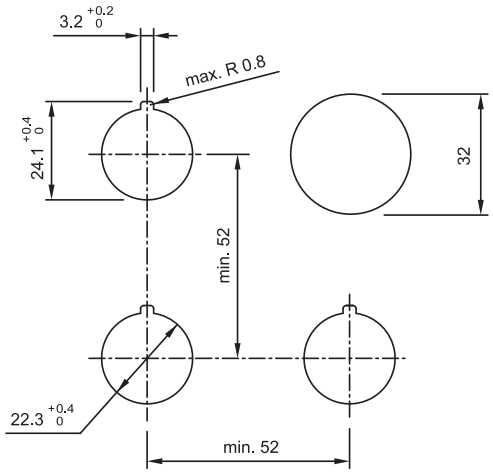

3 Illuminated pushbutton actuator page 9 **| Pushbutton actuator** page 10

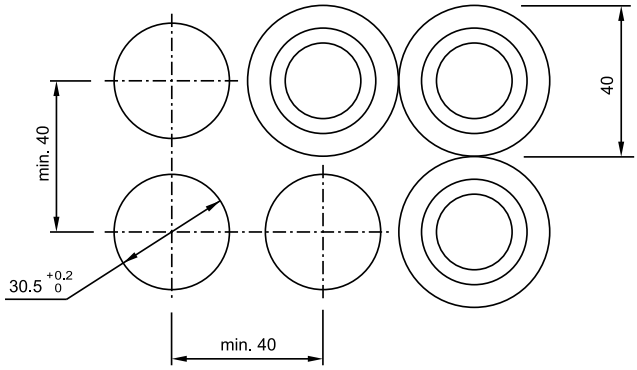

Technical drawing

1 Blind plug page 16

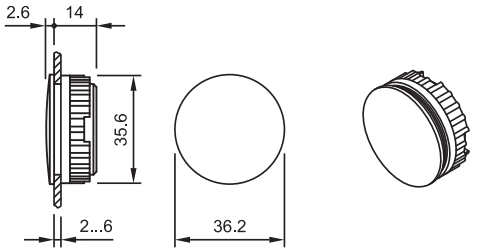

2 Stop pushbutton enclosure page 24

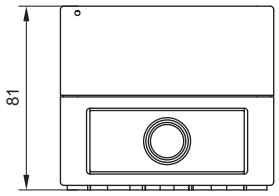

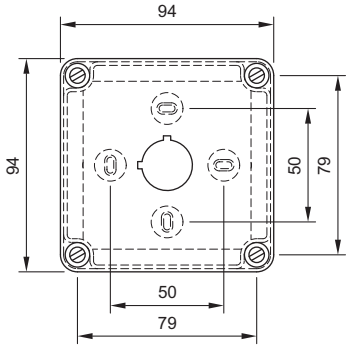

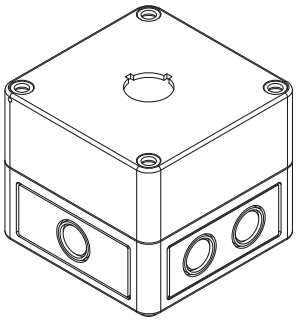

3 Stop pushbutton enclosure page 24

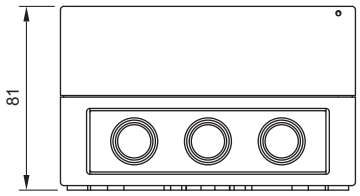

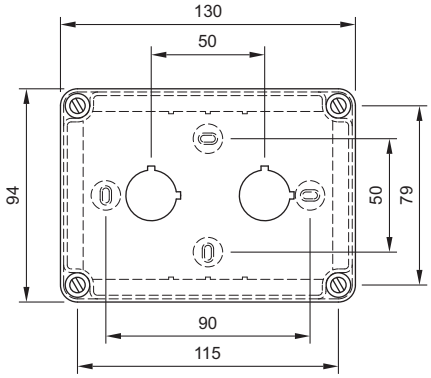

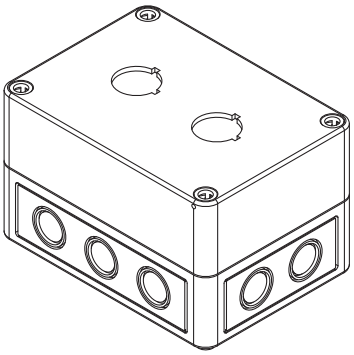

4 Stop pushbutton enclosure page 24

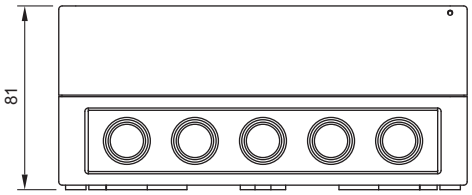

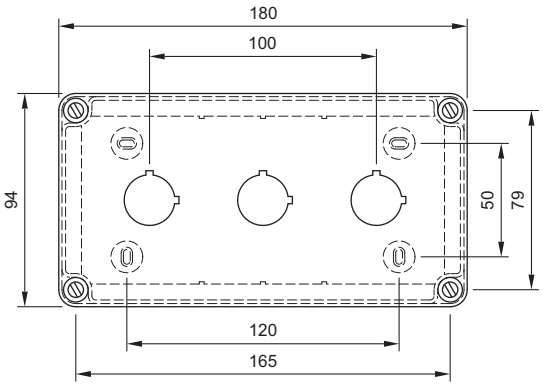

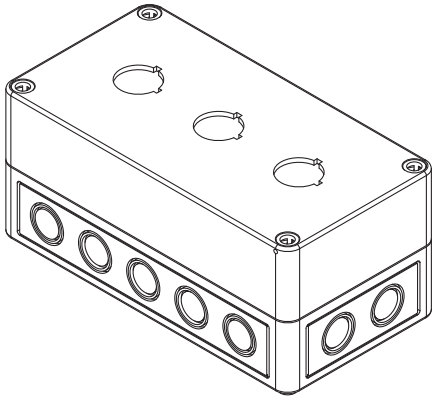

5 Stop pushbutton enclosure page 24

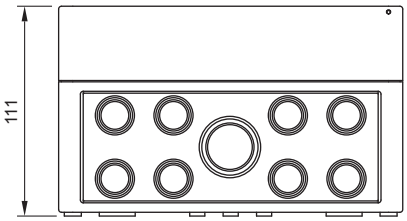

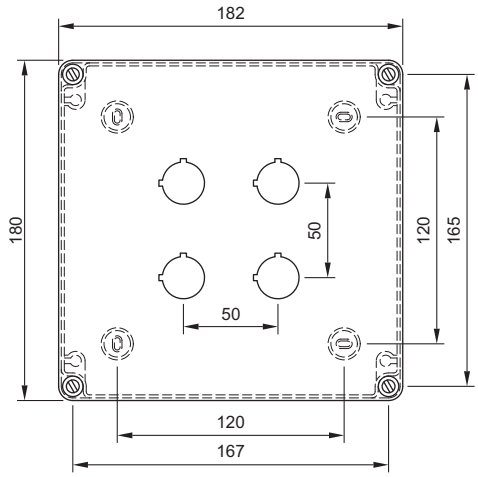

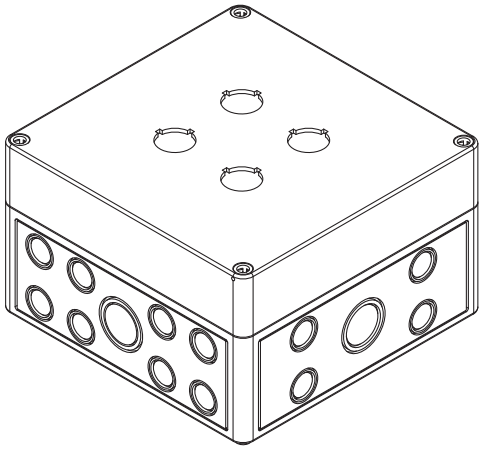

6 Stop pushbutton enclosure page 24

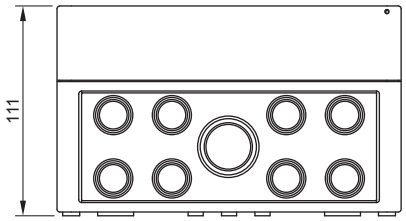

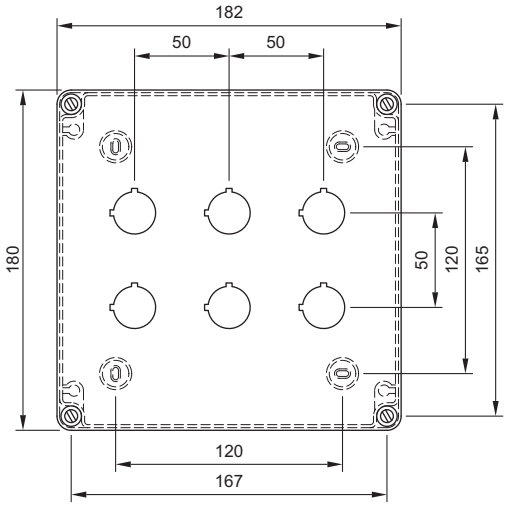

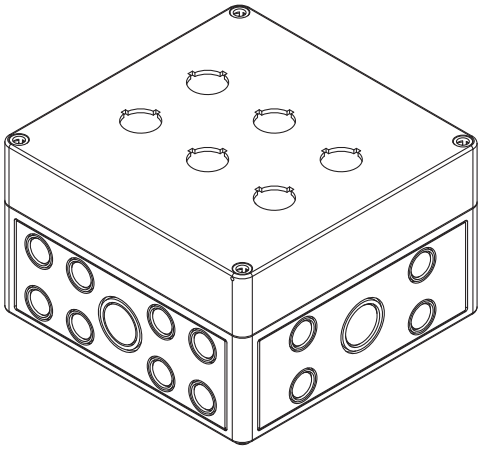

7 Legend frame page 15

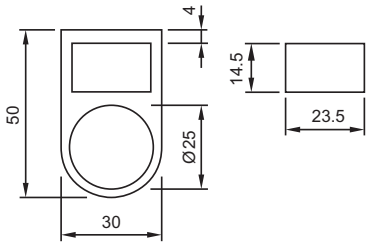

8 Blind plug page 16

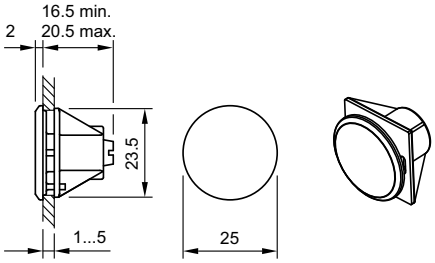

With this print version of the series 84, the panel thickness is reduced to 2.5 mm max.

9 Illumination element PCB mounting page 21

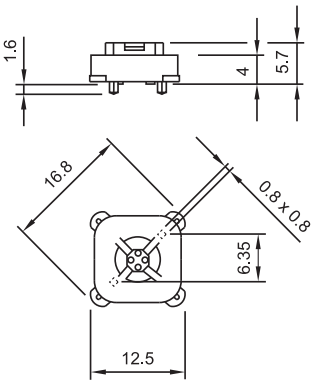

10 Mounting flange page 21

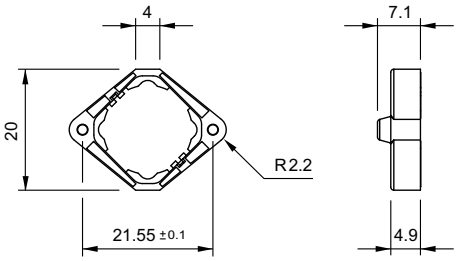

11 Emergency-stop enclosures page 24

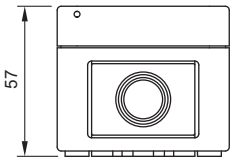

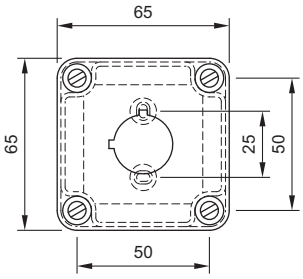

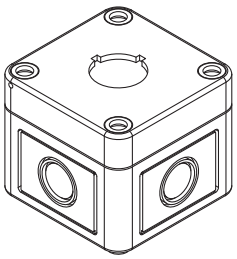

12 Emergency-stop protective shroud page 23

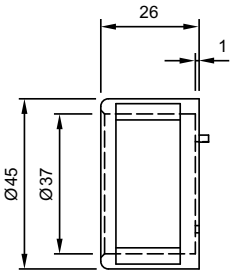

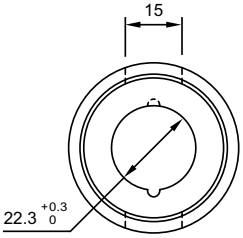

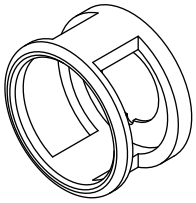

13 Mounting flange page 21

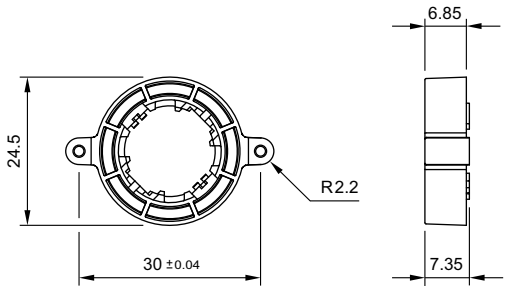

14 Emergency-stop protective shroud page 23

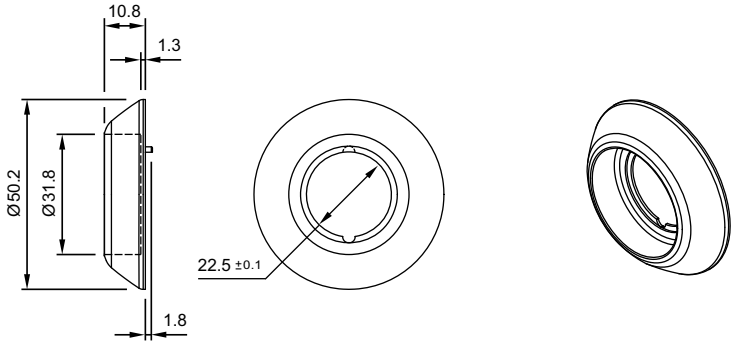

15 Switching element PCB mounting illuminative page 21

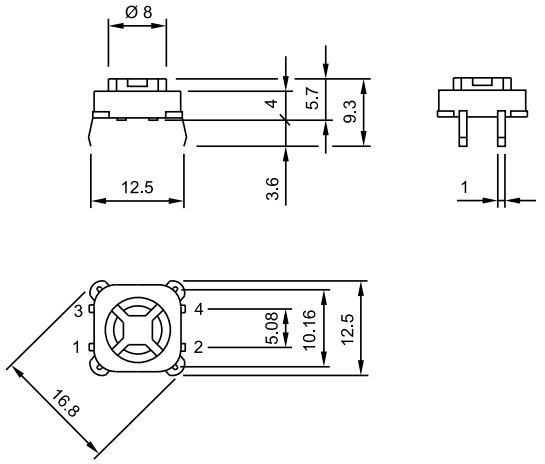

16 Indicator actuator page 9 **| Illuminated pushbutton actuator** page 9 **| Pushbutton actuator** page 10 **| Indicator actuator with ring illumination (illuminated bezel)** page 10 **| Pushbutton actuator with ring illumination (illuminated bezel)** page 11 **| Indicator actuator with ring illumination (illuminated multi-colour bezel)** page 12 **| Pushbutton actuator with ring illumination (illuminated multi-colour bezel)** page 12

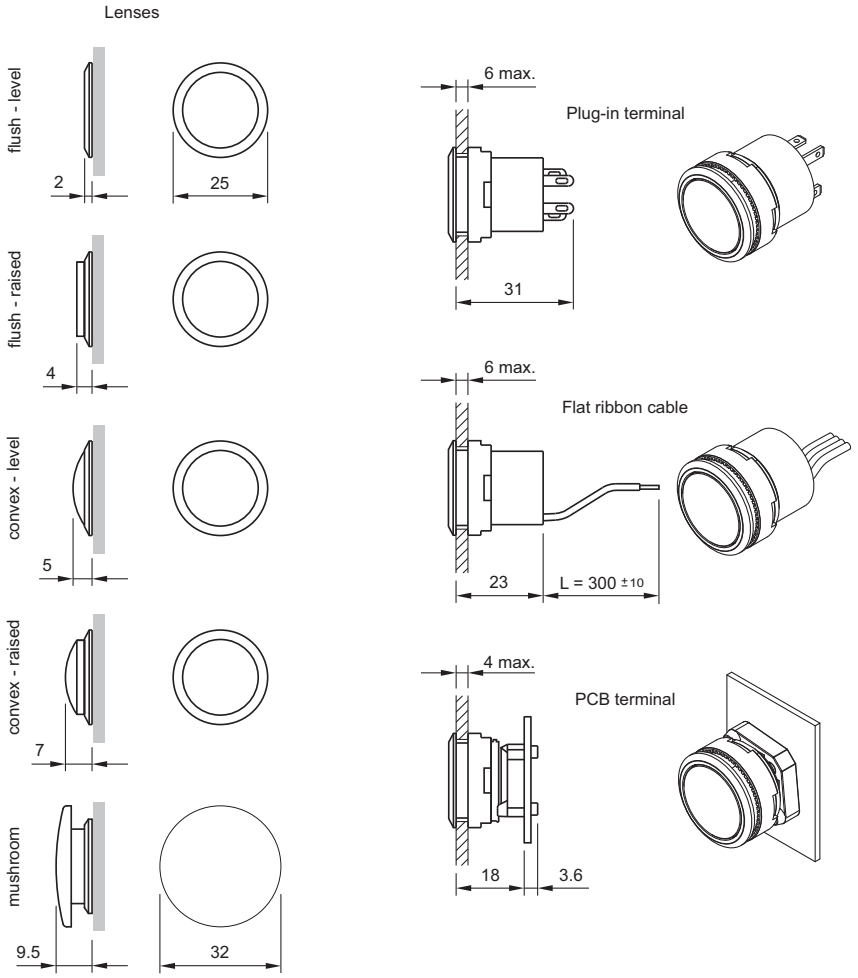

17 Emergency-stop pushbutton, foolproof EN IEC 60947-5-5, complete page 7 **| Stop pushbutton grey, complete** page 8

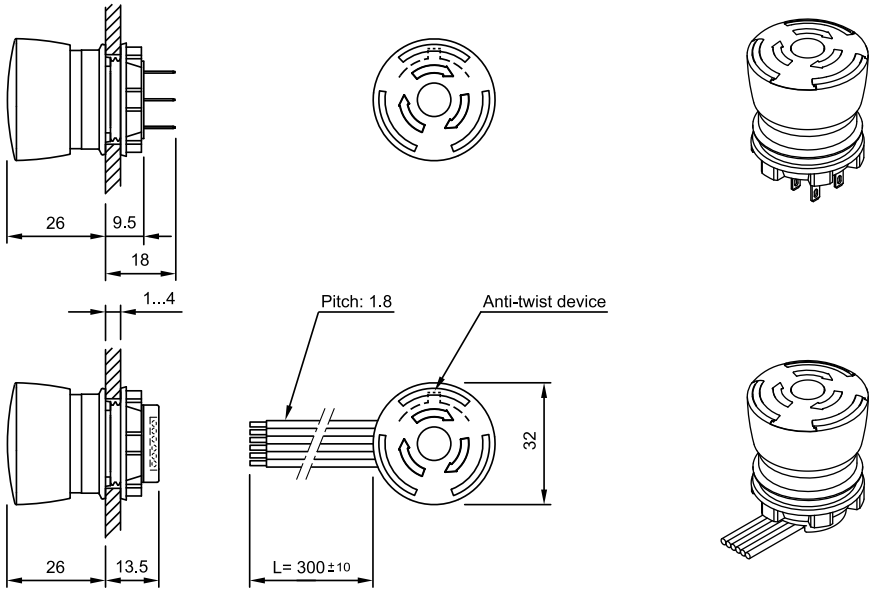

18 Illuminated pushbutton actuator page 9 **| Pushbutton actuator** page 10

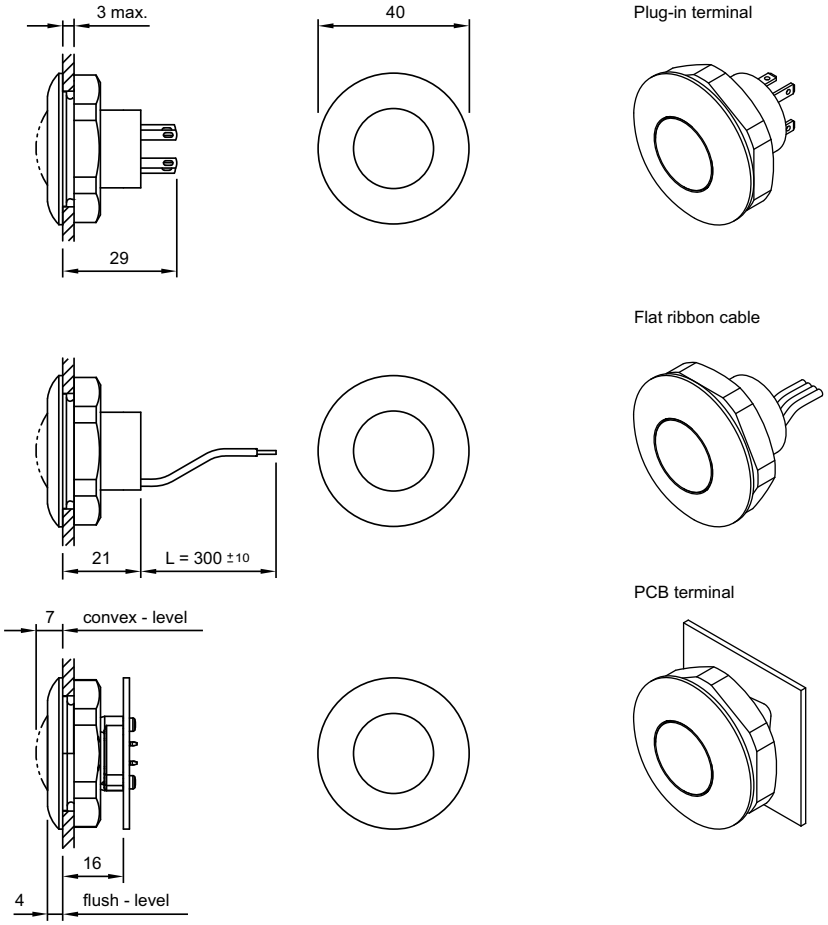

19 Housing, pole mounting 35 mm dia. page 25

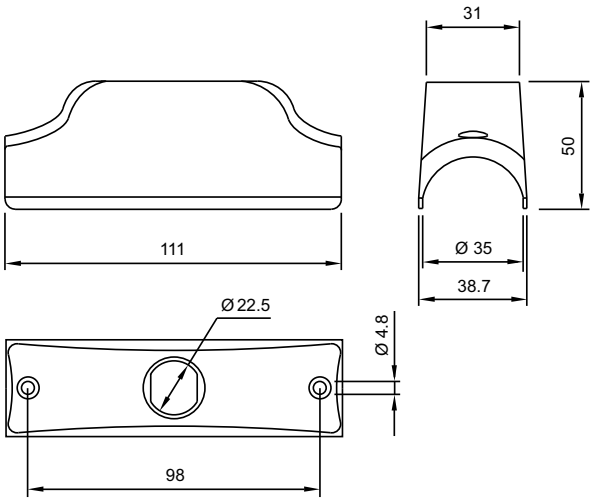

Please note: The cut-out of the pole must read min. 22 mm dia. and needs to be aligned with the switch!

20 Housing, pole mounting 38 mm dia. page 25

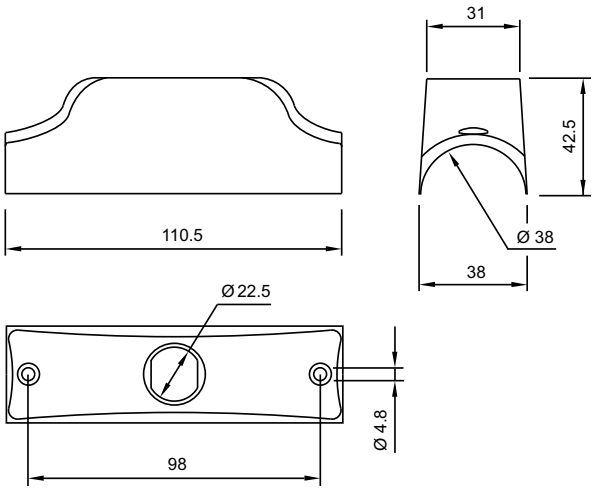

Please note: The cut-out of the pole must read min. 22 mm dia. and needs to be aligned with the switch!

21 Housing, wall mounting page 26

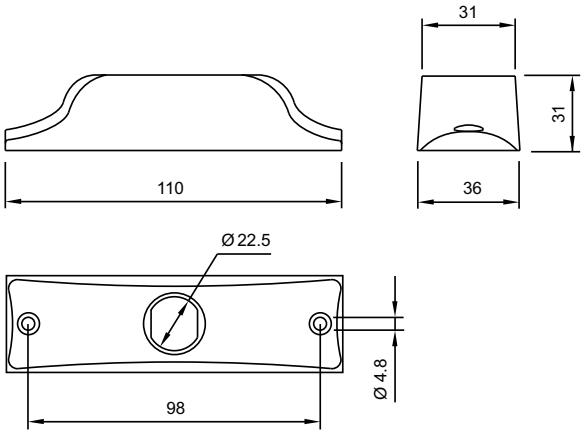

Please note: The cut-out of the wall must read min. 22 mm dia. and needs to be aligned with the switch!

22 Adaptor, reducing to 25 mm dia. page 26

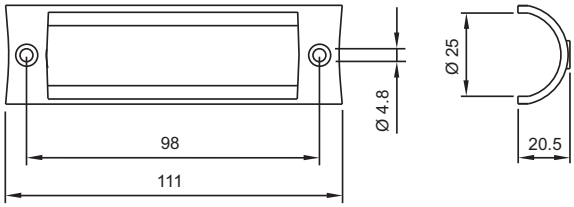

23 Adaptor, reducing to 30 mm dia. page 25

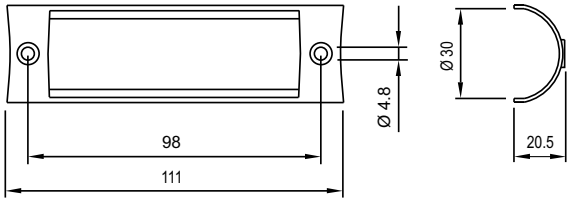

Circuit drawing

1 Illumination element with Bi-colour illumination page 18

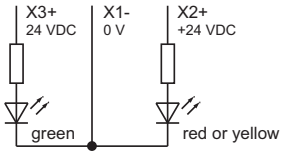

2 Illumination element with Bi-colour illumination page 18

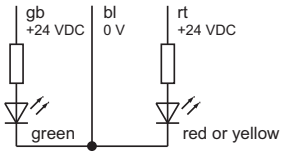

3 Switching element with Bi-colour illumination page 20

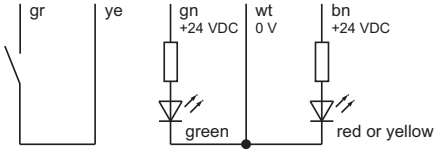

4 Illuminated pushbutton actuator page 9 **| Pushbutton actuator** page 10 **| Pushbutton actuator with ring illumination (illuminated bezel)** page 11 **| Pushbutton actuator with ring illumination (illuminated multi-colour bezel)** page 12

5 Illumination element page 17

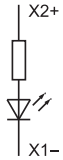

6 Switching element non-illuminated page 20

7 Switching element illuminated page 19

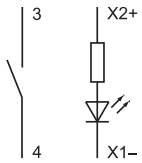

8 Emergency-stop pushbutton, foolproof EN IEC 60947-5-5, complete page 7 **| Stop pushbutton grey, complete** page 8

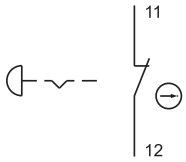

9 Emergency-stop pushbutton, foolproof EN IEC 60947-5-5, complete page 7 **| Stop pushbutton grey, complete** page 8

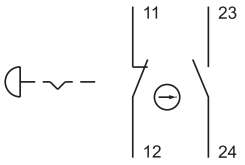

10 Emergency-stop pushbutton, foolproof EN IEC 60947-5-5, complete page 7 **| Stop pushbutton grey, complete** page 8

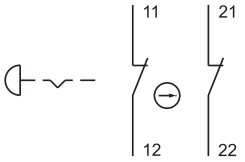

11 Emergency-stop pushbutton, foolproof EN IEC 60947-5-5, complete page 7 **| Stop pushbutton grey, complete** page 8

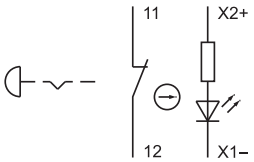

12 Emergency-stop pushbutton, foolproof EN IEC 60947-5-5, complete page 7 **| Stop pushbutton grey, complete** page 8

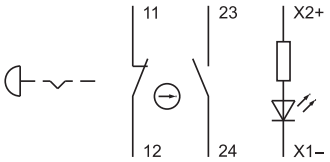

13 Emergency-stop pushbutton, foolproof EN IEC 60947-5-5, complete page 7 **| Stop pushbutton grey, complete** page 8

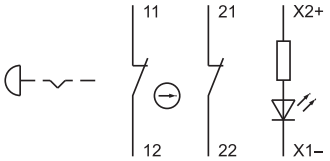

14 Switching element PCB mounting illuminative page 21

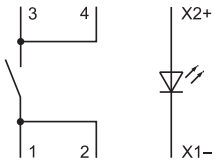

Index from Typ-Nr.

Typ-Nr.	Page
10-2602.3174D	22
10-2602.3202L	22
10-2602.3203L	22
10-2602.3205L	22
10-2602.3206L	22
10-2602.3209L	22
10-2603.320AL	22
10-2603.320CL	22
10-5609.3174D	22
31-929	22
31-929	25
31-946	24
61-9453.0	16
61-9481.6	24
61-9707.7	13
61-9730.0	26
61-9980.0	15
704.945.1	24
704.945.2	24
704.945.3	24
704.945.4	24
704.945.5	24
704.945.6	24
704.963.0	23
704.963.1	23
704.963.2	23
704.963.3	23
704.963.5	23
704.963.6	23
704.963.7	23
704.963.8	23
704.964.8	16
704.968.0	16
704.968.1	16
84-0080.7	11
84-0090.7	10
84-0100.0	9
84-0200.7	9
84-1081.7	12
84-1091.7	11
84-1101.0	10
84-1101.0	9
84-1201.0	10
84-1201.0	9
84-1201.2	10
84-1201.2	9
84-1201.4	10
84-1201.4	9
84-1201.5	10
84-1201.5	9
84-1201.6	10
84-1201.6	9
84-1201.7	10
84-1201.7	9
84-1221.7	10
84-1221.7	9
84-2101.0	10
84-2101.0	9
84-3100.0	9
84-5020.0020	7
84-5020.0040	7
84-5021.2B20	7
84-5021.2B40	7
84-5030.0020	7
84-5030.0040	7
84-5031.2B20	7
84-5031.2B40	7
84-5040.0020	7
84-5040.0040	7
84-5041.2B20	7
84-5041.2B40	7
84-5120.0020	7
84-5120.0040	7
84-5121.2B20	7
84-5121.2B40	7
84-5130.0020	7
84-5130.0040	7
84-5131.2B20	7
84-5131.2B40	7
84-5140.0020	7
84-5140.0040	7
84-5141.2B20	7
84-5141.2B40	7
84-6820.0020	8
84-6820.0040	8
84-6821.2B20	8
84-6821.2B40	8
84-6830.0020	8
84-6830.0040	8
84-6831.2B20	8
84-6831.2B40	8
84-6840.0020	8
84-6840.0040	8
84-6841.2B20	8
84-6841.2B40	8
84-7111.200	13
84-7111.201	13
84-7111.202	13
84-7111.203	13
84-7111.300	13
84-7111.301	13
84-7111.400	13
84-7111.401	13
84-7111.500	13
84-7111.501	13
84-7111.502	13
84-7111.503	13
84-7111.600	13
84-7111.601	13
84-7111.602	13
84-7111.603	13
84-7111.700	13
84-7111.701	13
84-7111.702	13
84-7111.703	13
84-7114.600A	15
84-7115.200	13
84-7115.300	13
84-7115.400	13
84-7115.500	13
84-7115.600	13
84-7115.700	13
84-7121.000	13
84-7121.800	13
84-7124.000A	15
84-7124.200A	15
84-7124.400A	15
84-7124.500A	15
84-7124.600A	15
84-7125.000	13
84-7125.800	13
84-7201.000	14
84-7201.200	14
84-7201.400	14
84-7201.500	14
84-7201.600	14
84-7201.800	14
84-7202.000	14
84-7202.000A	14
84-7202.200	14
84-7202.200A	14
84-7202.400	14
84-7202.400A	14
84-7202.500	14
84-7202.500B	14
84-7202.600	14
84-7202.600A	14
84-7202.800	14
84-7202.800A	14
84-7205.000	14
84-7205.000A	14
84-7205.200	14
84-7205.200A	14
84-7205.400	14
84-7205.400A	14
84-7205.500	14
84-7205.500A	14
84-7205.600	14
84-7205.600A	14
84-7205.800	14
84-7205.800A	14
84-7211.000	15
84-7211.200	15
84-7211.400	15
84-7211.500	15
84-7211.600	15
84-7211.800	15
84-7215.000	15
84-7215.200	15
84-7215.400	15
84-7215.500	15
84-7215.600	15
84-7215.800	15
84-8001.2320	17
84-8001.2340	17
84-8001.2620	17
84-8001.2640	17
84-8001.3320	17
84-8001.3340	17
84-8001.3620	17
84-8001.3640	17
84-8001.4320	17
84-8001.4340	17
84-8001.4620	17
84-8001.4640	17
84-8001.5320	17
84-8001.5340	17
84-8001.5620	17
84-8001.5640	17

Index from Typ-Nr.

Typ-Nr.	Page
84-8001.6320	17
84-8001.6340	17
84-8001.6620	17
84-8001.6640	17
84-8001.9320	17
84-8001.9340	17
84-8001.9620	17
84-8001.9640	17
84-8005.7620	18
84-8005.7640	18
84-8005.8620	18
84-8005.8640	18
84-8510.0020	20
84-8510.0040	20
84-8511.2320	19
84-8511.2340	19
84-8511.2620	19
84-8511.2640	19
84-8511.3320	19
84-8511.3340	19
84-8511.3620	19
84-8511.3640	19
84-8511.4320	19
84-8511.4340	19
84-8511.4620	19
84-8511.4640	19
84-8511.5320	19
84-8511.5340	19
84-8511.5620	19
84-8511.5640	19
84-8511.6320	19
84-8511.6340	19
84-8511.6620	19
84-8511.6640	19
84-8511.9320	19
84-8511.9340	19
84-8511.9620	19
84-8511.9640	19
84-8515.7640	20
84-8515.8640	20
84-900	22
84-902	23
84-902A	23
84-902B	23
84-902D	23
84-905	23
84-908	23
84-909	23
84-910	24
84-9103.7	15
84-9300.4	26
84-9300.8	26
84-9420	21
84-9500.4	25
84-9500.6A	25
84-9500.8	25
84-960.0	21
84-9600.4	25
84-9600.8	25
84-9700.4	25
84-9700.8	25
84-9800.4	26
84-9800.8	26

Typ-Nr.	Page
84-996	26
84-997	26
84-998	26
92-800.042	21
92-851.342	21
92-960.0	21

Typ-Nr.	Page

EAO AG
Tannwaldstrasse 88
4601 Olten, Switzerland

E-mail info@eao.com
Website www.eao.com

Austria
Phone +49 201 85 87 0
Fax +49 201 85 87 210
E-mail sales.ede@eao.com

Belgium
Phone +32 3 777 82 36
Fax +32 3 777 84 19
E-mail sales.ebl@eao.com

China
Phone +852 27 86 91 41
Fax +852 27 86 95 61
E-mail sales.ehk@eao.com

France
Phone +33 1 64 43 37 37
Fax +33 1 64 43 37 49
E-mail sales.ese@eao.com

Germany
Phone +49 201 85 87 0
Fax +49 201 85 87 210
E-mail sales.ede@eao.com

Italy
Phone +39 035 481 0189
Fax +39 035 481 3786
E-mail sales.eit@eao.com

Japan
Phone +81 3 5444 5411
Fax +81 3 5444 0345
E-mail sales.esj@eao.com

Netherlands
Phone +31 78 653 17 00
Fax +31 78 653 17 99
E-mail sales.enl@eao.com

Sweden
Phone +46 8 683 86 60
Fax +46 8 724 29 12
E-mail sales.esw@eao.com

Switzerland
Phone +41 62 388 95 00
Fax +41 62 388 95 55
E-mail sales.ech@eao.com

United Kingdom
Phone +44 1444 236 000
Fax +44 1444 236 641
E-mail sales.euk@eao.com

USA
Phone +1 203 877 4577
Fax +1 203 877 3694
E-mail sales.eus@eao.com

Other Countries
Phone +41 62 286 92 10
Fax +41 62 296 21 62
E-mail info@eao.com

EAO reserves the right to alter specifications without further notice

eao

OCEAN CHIPS
Океан Электроники
Поставка электронных компонентов

Компания «Океан Электроники» предлагает заключение долгосрочных отношений при поставках импортных электронных компонентов на взаимовыгодных условиях!

Наши преимущества:

- Поставка оригинальных импортных электронных компонентов напрямую с производств Америки, Европы и Азии, а так же с крупнейших складов мира;
- Широкая линейка поставок активных и пассивных импортных электронных компонентов (более 30 млн. наименований);
- Поставка сложных, дефицитных, либо снятых с производства позиций;
- Оперативные сроки поставки под заказ (от 5 рабочих дней);
- Экспресс доставка в любую точку России;
- Помощь Конструкторского Отдела и консультации квалифицированных инженеров;
- Техническая поддержка проекта, помощь в подборе аналогов, поставка прототипов;
- Поставка электронных компонентов под контролем ВП;
- Система менеджмента качества сертифицирована по Международному стандарту ISO 9001;
- При необходимости вся продукция военного и аэрокосмического назначения проходит испытания и сертификацию в лаборатории (по согласованию с заказчиком);
- Поставка специализированных компонентов военного и аэрокосмического уровня качества (Xilinx, Altera, Analog Devices, Intersil, Interpoint, Microsemi, Actel, Aeroflex, Peregrine, VPT, Syfer, Eurofarad, Texas Instruments, MS Kennedy, Miteq, Cobham, E2V, MA-COM, Hittite, Mini-Circuits, General Dynamics и др.);

Компания «Океан Электроники» является официальным дистрибьютором и эксклюзивным представителем в России одного из крупнейших производителей разъемов военного и аэрокосмического назначения **«JONHON»**, а так же официальным дистрибьютором и эксклюзивным представителем в России производителя высокотехнологичных и надежных решений для передачи СВЧ сигналов **«FORSTAR»**.

AVIC JONHON

«JONHON» (основан в 1970 г.)

Разъемы специального, военного и аэрокосмического назначения:

(Применяются в военной, авиационной, аэрокосмической, морской, железнодорожной, горно- и нефтедобывающей отраслях промышленности)

«FORSTAR» (основан в 1998 г.)

ВЧ соединители, коаксиальные кабели, кабельные сборки и микроволновые компоненты:

(Применяются в телекоммуникациях гражданского и специального назначения, в средствах связи, РЛС, а так же военной, авиационной и аэрокосмической отраслях промышленности).

FORSTAR®

Телефон: 8 (812) 309-75-97 (многоканальный)
Факс: 8 (812) 320-03-32
Электронная почта: ocean@oceanchips.ru
Web: http://oceanchips.ru/
Адрес: 198099, г. Санкт-Петербург, ул. Калинина, д. 2, корп. 4, лит. А