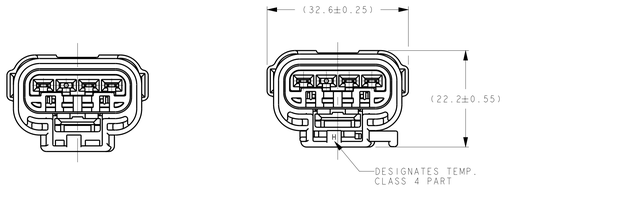

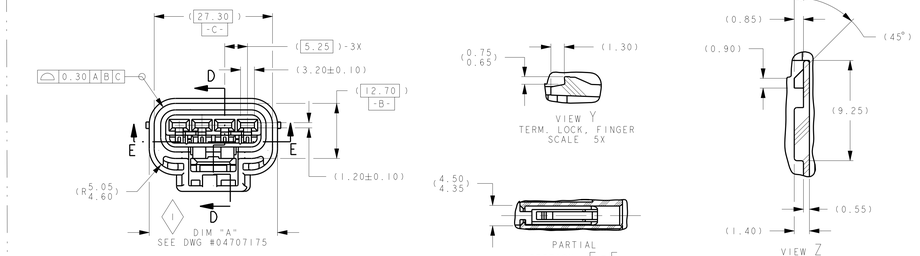

INSULATOR VIEWS
FOR REFERENCE ONLY

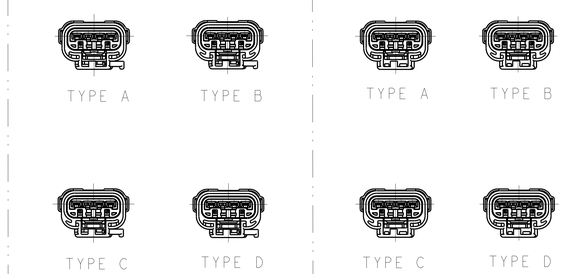

POLARIZATION OPTIONS
FULL SIZE
SHOWN W/CPA

POLARIZATION OPTIONS
FULL SIZE
SHOWN W/O CPA

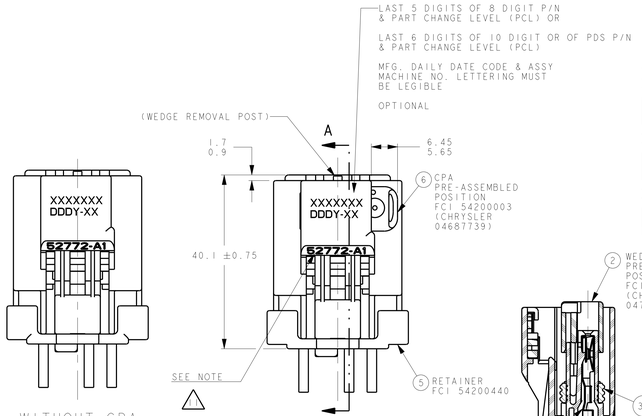

WITHOUT CPA
SEE P/N CHART
ALL DIMENSIONS SAME AS WITH CPA

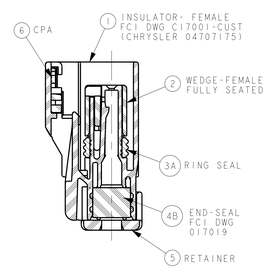

SECTION A-A
(FCI P/N 54200450)
(SEALED PLUG)

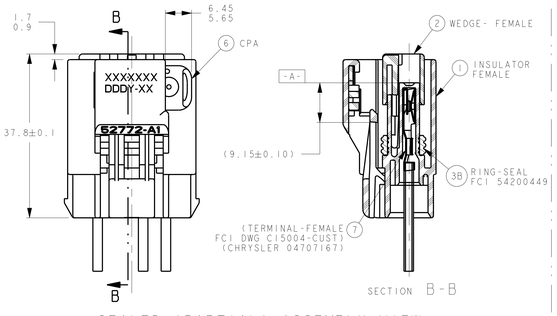

SEALED (PARTIAL) ASSEMBLY VIEW
SEE NOTE △1 SHIPPED WITHOUT END SEAL AND RETAINER

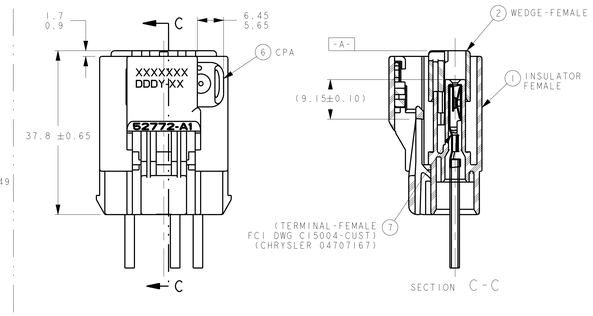

UNSEALED ASSEMBLY VIEW
SEE PART NUMBER CHART

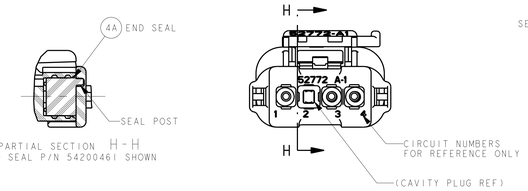

PARTIAL SECTION H-H
END SEAL P/N 54200461 SHOWN

SEALED ASSEMBLY VIEWS
SEE P/N CHART
SHOWN WITH CPA'S

MATING PART NUMBER CHART

INDEX TYPE	COLOR	SEALED/ UNSEALED	FCI FEMALE ASSEMBLY PART NUMBERS	CUSTOMER FEMALE ASSEMBLY PART NUMBERS	FCI MATING ASSEMBLY PART NUMBER FOR REFERENCE ONLY	CUSTOMER MATING ASSEMBLY PART NUMBER FOR REFERENCE ONLY
D	NATURAL	UNSEALED	54200404N	N/A	54200424,54200408	N/A
		UNSEALED	54200404	C 56038053	54200424,54200408	C 56042179,56038055
		SEALED	54200412N	N/A	54200416	N/A
		SEALED	54200412	C 04707264	54200416	C 04707380
	BLACK	SEALED	F915600	N/A	F225600	N/A
C	DK GREY	UNSEALED	54200403N	N/A	54200407	N/A
		UNSEALED	54200403	C 56038193	54200407	C 56038194
		SEALED	54200411N	N/A	54200415	N/A
		SEALED	54200411	C 04707263	54200415	C 04707379
		SEALED	55200428	N/A	54200429	N/A
	BLACK	SEALED	F815600	N/A	F125600	N/A
B	LT GREY	UNSEALED	54200402N	C 04688849	54200418,54200419 54200417,54200406	C 04495870,04661922 C 04707209, T.B.D.
		SEALED	54200450N	N/A	DIRECT CONNECT APPLICATION	
		SEALED	54200450	C 04707510	DIRECT CONNECT APPLICATION	
		SEALED	54200447N	C 04801217AA	54200417	C 04707209
		SEALED	54200422N	N/A	N/A	N/A
		SEALED	54200422	C 04759394AA	N/A	LH FUEL PUMP
		SEALED	54200410N	N/A	54200414,54200418 54200419,54200417	N/A
		SEALED	54200410	F 4L3T-14A464-AA	DIRECT CONNECT APPLICATION	
				C 04707256	54200414,54200418 54200419,54200417	C 04707267,04495870 C 04661922,04707209
		SEALED	54200495	N/A	F598500,F760600	N/A
		SEALED	54200480N	N/A	54200420/F598500	N/A
		SEALED	54200495	F 4U5T-14A464-HAA	DIRECT CONNECT APPLICATION	
		SEALED	54200480	C 04759900AA	54200420/F598500	LOW PERM HDR
	BLACK	SEALED	F715600	N/A	F025600	N/A
A	BLACK	UNSEALED	54200400N	N/A	54200405	N/A
		UNSEALED	54200400	C 56038052	54200405	C 56038054
		UNSEALED	INDEX-A	INDEX-A	54200423	C 56042178
		SEALED	F333900	GM 13580766	DIRECT CONNECT INDEX-A	N/A
		SEALED	54200467N	N/A	F860600/DIR CONNECT	N/A
		SEALED	54200467	C 04868299AA	F860600/DIR CONNECT	SOLID STATE RELAY
		SEALED	54200409N	N/A	54200413,54200426	N/A
		SEALED	54200409	C 04707262	54200413,54200426	C 04707266,04759236
		SEALED	54200421N	N/A	54200425	N/A
		SEALED	54200421	C 04759251	54200425	C 04759253
		SEALED	F398500	N/A	F498500	N/A
		SEALED	INDEX-A	INDEX-A	54200426,54200427 54200468	C 04759236, 56042441 C 04759236AB
		SEALED	55200445	N/A	55200446	N/A

CUSTOMER: CHRYSLER - C
FORD - F
GENERAL MOTORS - GM

FCI	52772 OR 52772 H	SEE CHART
VENDOR	VENDOR CODE	P/N

ASSEMBLY PART NUMBER CHART

FCI P/N'S	UNSEALED W/O CPA	UNSEALED W/CPA	SEALED W/CPA													SEALED W/O CPA							
CUSTOMER P/N'S			C 04688849	C 56038052	C 56038053	C 56038053										C 04801217AA							
54200400N						54200404	C 04707510																
54200403N							C 04707262	C 04707256	F 4L3T-14A464-AA	C 04707264	N/A	C 04759251	C 04759394AA	C 04868299AA	F 4U5T-14A464-HAA	GM 13580766	C 04759900AA	N/A						
54200404N							C 04707256	C 04707263		C 04707263			C 04759394AA										
54200402N							C 04707263																
54200400																							
54200403																							
54200404																							
54200450																							
54200409																							
54200410																							
54200411																							
54200412																							
54200428																							
54200421																							
54200422																							
54200467																							
54200495																							
F333900																							
54200480																							
F398500																							
54200447N																							
54200450N																							
54200409N																							
54200410N																							
54200411N																							
54200412N																							
54200421N																							
54200422N																							
54200467N																							
54200480N																							

ASSEMBLY PART NOS. (SEALED)	REQUIRED			
55200445	1			
F715600		1		
F815600			1	
F915600				1

ITEM	FCI NO.	CHRYSLER NO.	COLOR	PART NAME (MAT'L)	CLASS 3 INDEX	CLASS 3 FCI NO.	CLASS 3 COLOR	REQUIRED			
1	54200431	04707186	BLK	INSULATOR-FEMALE (NYLON)	A	55200442	BLACK	1			
1	54200435	04688853	LT GRY	INSULATOR-FEMALE (NYLON)	B	F325600	BLACK		1		
1	54200433	04707188	DK GRY	INSULATOR-FEMALE (NYLON)	C	F425600	BLACK			1	
1	54200434	04707189	NATURAL	INSULATOR-FEMALE (NYLON)	D	F525600	BLACK				1
2	54200442	04707540	AQUA	WEDGE-FEMALE;(NYLON)		55200443	NATURAL	1	1	1	1
3A	54200459	04707191	RED	RING SEAL;(SILICONE)		•55200444	DK BLU	1	1	1	1
3B	54200449 (WAS C17007)		GRN	RING SEAL;(FLUOROSILICONE)							
4A	54200428	N/A	LT BLU	END SEAL;(SILICONE)		•55200439	DK BLU	1	1	1	1
4A	54200429	N/A	BURNT ORG	END SEAL;(SILICONE)							
4A	54200461	N/A	BRT RED	END SEAL;(SILICONE) HYBRID							
4A	54200469	N/A	LT GRY	END SEAL;(SILICONE) HYBRID							
4B	54200458	N/A	BRT YEL	END SEAL;(SILICONE)W/O HOLES							
5	54200440	N/A	BLK	RETAINER;(NYLON)		55200438	NATURAL	1	1	1	1
6	54200003	04687739	RED	CPA LATCH;(NYLON)		54200008	NATURAL	1	1	1	1
3	3	3	3	3	3	3	3	3	3	3	3
U	U	U	U	U	U	U	U	W	W	W	W

CONNECTOR ASSEMBLY TEMPERATURE CLASS PER SAE/USCAR-2 REV 5

PART CHANGE LEVEL (PCL)

PLUG	22 TO 10 SEE NOTES	20,18,16 OR 14	SEE NOTE △5	20 14 / 12 10	12 10 / 14 10	12 10 / 14 10	12 10 / 14 10	12 10 / 14 10	12 10 / 14 10	SEE NOTE △5 △1	SAME AS WITH CPA
1											
2											
3											
4											
CIR NO.	WIRE GAGE	WIRE GAGE		SEE NOTE △5							WIRE GAGE

20 TO 14
WIRE GAUGE

* △1 SEALS BAKED AT 450°F FOR 5 HOURS DURING CONTINUOUSLY INTRODUCED FRESH AIR TO DRIVE OFF VOLITIES

** △1 FORD PART NUMBERS ARE LISTED FOR REFERENCE ARE PPAP'D TO FORD 4L3T-14A464-AA DRAWING

△1 MUST USE WIRE SIZES AS SPECIFIED FOR CIRCUIT LOCATION SHOWN: FOR EXAMPLE 12 OR 10 AWG, 20 TO 14 OR 18 TO 14 AWG

NOTES:

△1 QUALITY ASSURANCE REQUIREMENTS PER CHRYSLER PS-7300; I SPC DATA REQUIRED

△2 ENGINEERING APPROVAL OF SUPPLIER SAMPLES IS REQUIRED PRIOR TO AUTHORIZATION OF PART PRODUCTION

△3 CHANGES IN DESIGN COMPOSITION OR PROCESSING FROM THE PART PREVIOUSLY APPROVED FOR PART PRODUCTION REQUIRES PRIOR ENGINEERING APPROVAL

△4 WIRING FABRICATORS MUST PURCHASE FROM SOURCES SHOWN

△5 ALL THE SEALED CONNECTOR APPLICATIONS MUST BE USED WITH CHRYSLER WIRE SPEC. MS-8288 OR MS-9502 THIN WALL X-LINK 20,18, 16, 14, 12 & 10 GAGE WIRES ONLY UNLESS OTHERWISE SPECIFIED SEE CHART (WIRE INSULATIONS Ø1.70 MIN TO Ø4.09 MAX.)

△6 ALL NON-SEALED APPLICATIONS MAY BE USED WITH ANY WIRE INSULATION 22 GAGE THRU. 10 GAGE (EXCEPT AS NOTED) PROVIDING THAT A TERMINAL GRIP FOR THAT CORE/INSULATION COMBINATION IS SHOWN ON THE FEMALE TERMINAL DRAWING

MAX. INSULATION CRIMP WIDTH = 4.50
MAX. INSULATION CRIMP HEIGHT= 4.50
MAX. INSULATION DIA. =4.09 (10 GA THIN WALL)

△7 MUST BE USED WITH FLOUROSILICONE END SEAL FCI P/N 54200430, RETAINER & PROPER GAGE TEFLON WIRES FOR METHANOL OR DIESEL FUEL APPLICATIONS

△8 USE WITH CAVITY PLUG FCI P/N 54200005. WHEN REQ'D. USE WITH 2.80MM APEX FEM. TERM. PER C15004-CUST SYM. ABOUT CENTERLINE FOR 180° ORIENTATION

△9 TEST METHOD PER SAE/USCAR-2 REV. 5. CONNECTOR ENGAGE & DISENGAGE WITH LATCH DEPRESSED FORCE NOT TO EXCEED 75 N. FOR THIS SYSTEM

CPA SEATING FORCES - 40 N. MAX.

WEDGE SEATING FORCES - 100 N. MAX.

△10 SUPPLIER, MOLD & CAVITY I.D. MUST BE LEGIBLE

△11 ANNUAL QUALITY REQUIREMENTS:
IT IS PERMISSIBLE TO PERFORM CONTINUOUS CONFORMANCE PER FCI SPECIFICATION #AQA-001 INSTEAD OF ANNUAL LAYOUT & ANNUAL PV REQUIREMENTS OF QS-9000 SECTION 2 & PF-9600

ALL NON-REFERENCE DIMENSIONS ARE REQUIRED

- USE INDEX A, BLACK SEALED AND UNSEALED FOR ALL AFFECTED INSULATOR CAVITIES

- CURRENT PRODUCTION TOOLING

- POINT OF LAST RUN

SERVICE TOOLING GUIDE INFORMATION PER APEX TRAINING MANUAL

△12 MUST CONFORM TO THE FOLLOWING CHRYSLER/YNA STANDARDS:

PF-9600 PERFORMANCE (CHRYSLER) EXCEPT AS NOTED ABOVE
PS-7300 QUALITY ASSURANCE (CHRYSLER).
PS-4480-CEK-4 (CHRYSLER) PART I.D. (G-009-2 YNA)
PS-9065 REGRIND (CHRYSLER), (G-009-3 YNA)
PS-9227 DATA EXCHANGE (CHRYSLER),(G-009-7 YNA)
PS-10052 INFORMATION SECURITY (CHRYSLER)

△13 THIS DRAWING (H59003) REPLACES CHRYSLER DRAWING NUMBER 04707254 LEVEL "R"
CHRYSLER DRAWING IS FOR REFERENCE ONLY

△14 FCI P/N WITH SUFFIX "N" DESIGNATES ASSEMBLIES W/O CPA

△15 P/N'S WITH BURNT ORANGE END SEAL CAN BE USED WITH 12 OR 14 GAGE IN ANY COMBINATION OR ORDER OR WITH THREE 12 GAGE AND ONE 18 GAGE OR ONE 16 GAGE WIRE (ONE END)

ECN-NUMBER	DATE M-D-YY	REVISION	ZONE	CHANGE DESCRIPTION	DRAWN BY	CHK. BY	APPR. BY
11670	9-30-10	X	E16 A13 D20	P/N F323900 AND GM 13580766 ADDED; LETTERS ADDED TO DWG NUMBERS FOR INSULATOR NAMES. NOTE #18 ADDED FOR APPLICABLE WIRE SIZES. #10 REVISED AND P/N 54200429 WAS INCORRECTLY SHOWN AS 54200249, LETTER H ADDED TO DESIGNATE TEMP. CLASS 4 PARTS AND CHARTS UPDATED	ASHOK	SSS	SSS
11287	01-27-10	W	A23 E10	TEMP. CLASS 4 INSULATOR COLOR CHANGED TO BLACK FOR ALL POLARIZATIONS	ASHOK	SSS	SSS
11229	11-20-09	V1	A13 C12	DIMENSION "H/H" ADDED WITH END SEAL P/N 54200461 & TABLE UPDATED	RRR	SSS	SSS
11017	10-08-09	V	E16 E9	P/N'S 54200495, F398500 TEMP. CLASS 3 AND 54200467,F860600 TEMP. CLASS 4 ADDED. P/N'S F715600, F815600 & F915600 FOR TEMP. CLASS 4 ADDED, BOTH CHARTS UPDATED	ASHOK	SSS	SSS
10415	6-03-08	U2	C9, D9 C10 B10 E3,E5 B23	NOTE 16 ALIGNED WITH BAKED SEAL PART NUMBERS. THE P/N 55200439 LOCATION CORRECTED, DCA CHANGED TO CHRYSLER. 54200008 WAS 55200008 SAE/USCAR-2 REV 5 WAS PF-9600. .75N WAS 90N ON GREEN ADDED. MATING PART CHART UPDATED..	ASHOK	SSS	SSS
10189	3-12-08	U1	F8	USE WITH 2.80MM APEX FEMALE TERMINAL NOTE ADDED FOR 180° ORIENTATION. 90° LATCH OPTION VIEWS & CALLOUTS FROM CHART DELETED.	ANSU	SSS	SSS
I	I	I	I	REDRAWN ON FCI TITLE BLOCK. SEE REV "U" FOR PREVIOUS CHANGES	I	I	I
I	I	I	ALL		I	I	I

PRODUCT SPEC: APEX 2.8 WM
PACKAGING SPEC: -
APPLICATION SPEC: -
THIS DRAWING AND ALL OTHER INFORMATION CONTAINED THEREINI IS THE PROPERTY OF FCI AND ITS SUBSIDIARIES. IT MAY NOT be copied, reproduced or disclosed to any third party without the expressed written permission of FCI. © FCI April 1998

TOLERANCES: 2 PLACE DIM ±0.8 3 PLACE DIM ±0.5 ANGULAR DIM ±2°
CONTRACT NO: H59012
MATERIAL: NOTED ON COMPONENT PRINTS
SURFACE FINISH: -
COLOR: -
DO NOT SCALE DRAWING
TOOL NO: A-047
SO Loc. Code: NA
DRAWN BY: RAJKUMAR 05-25-05
CHECKED BY: SUCHA SIANG 05-25-05
APPROVED BY: SUCHA SIANG 05-25-05
TITLE: CHART - ASSEMBLY 4WAY FEMALE (2.80MM APEX CONN.SYSTEM)
CUR NO: WT-234, 6243
EXT. NO: -
DRAWING NUMBER: H59003
SHEET 1 OF 1
FILE NAME: H59003.DWG
SCALE: 4:1
CAD SYSTEM: pro / eng
UNITS: DIMENSION IN MILLIMETERS
SIZE: A0

OCEAN CHIPS
Океан Электроники
Поставка электронных компонентов

Компания «Океан Электроники» предлагает заключение долгосрочных отношений при поставках импортных электронных компонентов на взаимовыгодных условиях!

Наши преимущества:

- Поставка оригинальных импортных электронных компонентов напрямую с производств Америки, Европы и Азии, а так же с крупнейших складов мира;
- Широкая линейка поставок активных и пассивных импортных электронных компонентов (более 30 млн. наименований);
- Поставка сложных, дефицитных, либо снятых с производства позиций;
- Оперативные сроки поставки под заказ (от 5 рабочих дней);
- Экспресс доставка в любую точку России;
- Помощь Конструкторского Отдела и консультации квалифицированных инженеров;
- Техническая поддержка проекта, помощь в подборе аналогов, поставка прототипов;
- Поставка электронных компонентов под контролем ВП;
- Система менеджмента качества сертифицирована по Международному стандарту ISO 9001;
- При необходимости вся продукция военного и аэрокосмического назначения проходит испытания и сертификацию в лаборатории (по согласованию с заказчиком);
- Поставка специализированных компонентов военного и аэрокосмического уровня качества (Xilinx, Altera, Analog Devices, Intersil, Interpoint, Microsemi, Actel, Aeroflex, Peregrine, VPT, Syfer, Eurofarad, Texas Instruments, MS Kennedy, Miteq, Cobham, E2V, MA-COM, Hittite, Mini-Circuits, General Dynamics и др.);

Компания «Океан Электроники» является официальным дистрибьютором и эксклюзивным представителем в России одного из крупнейших производителей разъемов военного и аэрокосмического назначения **«JONHON»**, а так же официальным дистрибьютором и эксклюзивным представителем в России производителя высокотехнологичных и надежных решений для передачи СВЧ сигналов **«FORSTAR»**.

AVIC JONHON

«JONHON» (основан в 1970 г.)

Разъемы специального, военного и аэрокосмического назначения:

(Применяются в военной, авиационной, аэрокосмической, морской, железнодорожной, горно- и нефтедобывающей отраслях промышленности)

«FORSTAR» (основан в 1998 г.)

ВЧ соединители, коаксиальные кабели, кабельные сборки и микроволновые компоненты:

(Применяются в телекоммуникациях гражданского и специального назначения, в средствах связи, РЛС, а так же военной, авиационной и аэрокосмической отраслях промышленности).

FORSTAR®

Телефон: 8 (812) 309-75-97 (многоканальный)
Факс: 8 (812) 320-03-32
Электронная почта: ocean@oceanchips.ru
Web: http://oceanchips.ru/
Адрес: 198099, г. Санкт-Петербург, ул. Калинина, д. 2, корп. 4, лит. А