LC²MOS
8-Bit µP-Compatible 12-Bit DAC
AD7548

FEATURES
8-Bit Bus Compatible 12-Bit DAC
All Grades 12-Bit Monotonic Over Full Temperature Ranges
Operation Specified at +5V, +12V or +15V Power Supply
Low Gain Drift of 5ppm/°C Maximum
Full 4 Quadrant Multiplication
Skinny DIP and Surface Mount Packages

APPLICATIONS
8-Bit Microprocessor Based Control Systems
Programmable Amplifiers
Function Generation
Servo Control

AD7548 FUNCTIONAL BLOCK DIAGRAM

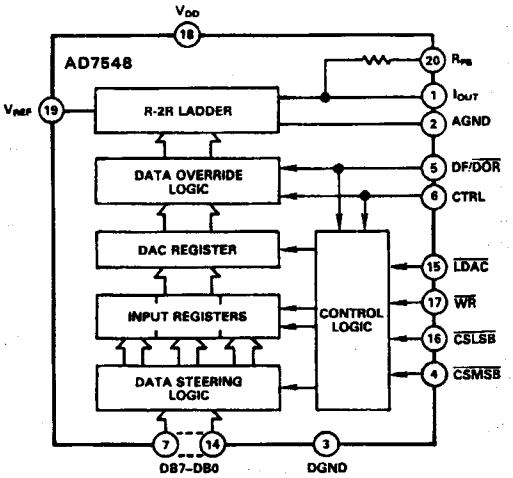

GENERAL DESCRIPTION
The AD7548 is a 12-bit monolithic CMOS D/A converter for use with 8-bit bus microprocessors. Data is loaded in two bytes to input holding registers as shown in the block diagram opposite. The AD7548 can be configured to accept either left- or right-justified data, least significant byte or most significant byte first, using standard TTL compatible control inputs.

A separate load DAC control input allows the user the choice of updating the analog output coincident with loading new data to the DAC input register or at any time after the data loading event. This feature is especially important in multi-DAC systems where simultaneous update of all DACs is required.

The new Linear Compatible CMOS (LC² MOS) process used in the manufacture of the AD7548 allows precision thin-film linear circuitry and high-speed low-power CMOS logic to be integrated on the same small chip. The high-speed logic allows direct interfacing to most of the popular 8-bit microprocessors.

PRODUCT HIGHLIGHTS
1. Microprocessor Compatibility
   High speed input control (TTL/5V CMOS compatible) allow direct interfacing to most of the popular 8-bit microprocessors.
2. Guaranteed Monotonicity
   The AD7548 is guaranteed monotonic to 12-bits over the full temperature range for all grades and at all specified supply voltages.
3. Selectable Data Input Format
   Left- or right-justified data, least significant or most significant byte first. This allows the AD7548 to be interfaced with microprocessors using either Motorola or Intel-type data formatting.
4. Monolithic Construction
   For increased reliability and reduced package size – 0.3″ 20-pin DIP and 20-terminal surface mount packages.
5. Single Supply Operation – See Figure 8.
6. Low Gain Error and Gain Error T.C.

Rev. A
Information furnished by Analog Devices is believed to be accurate and reliable. However, no responsibility is assumed by Analog Devices for its use, nor for any infringements of patents or other rights of third parties that may result from its use. Specifications subject to change without notice. No license is granted by implication or otherwise under any patent or patent rights of Analog Devices. Trademarks and registered trademarks are the property of their respective owners.

One Technology Way, P.O. Box 9106, Norwood, MA 02062-9106, U.S.A.
Tel: 781.329.4700 www.analog.com
Fax: 781.461.3113
© 2005 Analog Devices, Inc. All rights reserved.

SPECIFICATIONS[1] (V_{DD} = +5V, V_{REF} = +10V; I_{OUT} = AGND = 0V. All specifications T_{min} to T_{max} unless otherwise specified)

Parameter	J, A Versions	K, B Versions	S Version	T Version	Units	Test Conditions/Comments
ACCURACY						
Resolution	12	12	12	12	Bits	
Relative Accuracy	±1	±1/2	±1	±1/2	LSB max	
Differential Nonlinearity	±1	±1/2	±1	±1/2	LSB max	All grades guaranteed monotonic to 12-bits over temperature.
Full Scale Error	±6	±3	±6	±3	LSB max	Measured using internal R_{FB} and includes effects of leakage current and gain TC. Full Scale Error can be trimmed to zero.
Gain Temperature Coefficient[2]; ΔGain/ΔTemperature	±5	±5	±5	±5	ppm/°C max	Typical value is 2ppm/°C
Output Leakage Current I_{OUT} (Pin 1)						
+25°C	±5	±5	±5	±5	nA max	All digital inputs = 0V
T_{min} to T_{max}	±25	±25	±150	±150	nA max	
REFERENCE INPUT						
Input Resistance, Pin 19	7	7	7	7	kΩ min	Typical Input Resistance = 11kΩ
	20	20	20	20	kΩ max	
DIGITAL INPUTS						
V_{IH} (Input High Voltage)	2.4	2.4	2.4	2.4	V min	
V_{IL} (Input Low Voltage)	0.8	0.8	0.8	0.8	V max	
I_{IN} (Input Current)						
+25°C	±1	±1	±1	±1	μA max	V_{IN} = 0V or V_{DD}
T_{min} to T_{max}	±10	±10	±10	±10	μA max	
C_{IN} (Input Capacitance)[2]	7	7	7	7	pF max	
POWER SUPPLY						
V_{DD} Range	4.75/5.25	4.75/5.25	4.75/5.25	4.75/5.25	V min/V max	Specifications guaranteed over this range
I_{DD}	2	2	2	2	mA max	All digital inputs V_{IL} or V_{IH}
	300	300	300	300	μA max	All digital inputs 0V or V_{DD}

SPECIFICATIONS[1] (V_{DD} = +12V to +15V, V_{REF} = +10V; I_{OUT} = AGND = 0V. All specifications T_{min} to T_{max} unless otherwise specified)

Parameter	J, A Versions	K, B Versions	S Version	T Version	Units	Test Conditions/Comments
ACCURACY						
Resolution	12	12	12	12	Bits	
Relative Accuracy	±1	±1/2	±1	±1/2	LSB max	
Differential Nonlinearity	±1	±1/2	±1	±1/2	LSB max	All grades guaranteed monotonic to 12-bits over temperature.
Full Scale Error	±6	±3	±6	±3	LSB max	Measured using internal R_{FB} and includes effects of leakage current and gain TC. Full Scale Error can be trimmed to zero.
Gain Temperature Coefficient[2]; ΔGain/ΔTemperature	±5	±5	±5	±5	ppm/°C max	Typical value is 2ppm/°C
Output Leakage Current I_{OUT} (Pin 1)						
+25°C	±5	±5	±5	±5	nA max	All digital inputs = 0V
T_{min} to T_{max}	±25	±25	±150	±150	nA max	
REFERENCE INPUT						
Input Resistance, Pin 19	7	7	7	7	kΩ min	Typical Input Resistance = 11kΩ
	20	20	20	20	kΩ max	
DIGITAL INPUTS						
V_{IH} (Input High Voltage)	2.4	2.4	2.4	2.4	V min	
V_{IL} (Input Low Voltage)	0.8	0.8	0.8	0.8	V max	
I_{IN} (Input Current)						
+25°C	±1	±1	±1	±1	μA max	V_{IN} = 0V or V_{DD}
T_{min} to T_{max}	±10	±10	±10	±10	μA max	
C_{IN} (Input Capacitance)[2]	7	7	7	7	pF max	
POWER SUPPLY						
V_{DD} Range	11.4/15.75	11.4/15.75	11.4/15.75	11.4/15.75	V min/V max	Specifications guaranteed over this range
I_{DD}	3	3	3	3	mA max	All digital inputs V_{IL} or V_{IH}
	1	1	1	1	mA max	All digital inputs 0V or V_{DD}

NOTES
[1]Temperature range as follows: J, K Versions; 0 to +70°C
A, B Versions; −40°C to +85°C
S, T Versions; −55°C to +125°C
[2]Guaranteed by design but not production tested.
Specifications subject to change without notice.

TIMING CHARACTERISTICS[1] (V_{DD} = +5V, V_{REF} = +10V, I_{OUT} = AGND = 0V unless otherwise stated)

Parameter	Limit at T_A = 25°C	Limit[2] at T_A = 0 to +70°C −40°C to +85°C	Limit[2] at T_A = −55°C to +125°C	Units	Test Conditions/Comments
t_{DS}	240	240	290	ns min	Data Valid Setup Time
t_{DH}	50	50	70	ns min	Data Valid Hold Time
t_{CWS}	30	40	50	ns min	$\overline{CSMSB}$ or $\overline{CSLSB}$ to $\overline{WR}$ Setup Time
t_{CWH}	15	20	25	ns min	$\overline{CSMSB}$ or $\overline{CSLSB}$ to $\overline{WR}$ Hold Time
t_{LWS}	30	40	50	ns min	$\overline{LDAC}$ to $\overline{WR}$ Setup Time
t_{LWH}	15	20	25	ns min	$\overline{LDAC}$ to $\overline{WR}$ Hold Time
t_{WR}	250	280	320	ns min	Write Pulse Width

TIMING CHARACTERISTICS[1] (V_{DD} = +12V to +15V, V_{REF} = +10V, I_{OUT} = AGND = 0V unless otherwise stated)

Parameter	Limit at T_A = 25°C	Limit[2] at T_A = 0 to +70°C −40°C to +85°C	Limit[2] at T_A = −55°C to +125°C	Units	Test Conditions/Comments
t_{DS}	160	190	230	ns min	Data Valid Setup Time
t_{DH}	30	30	50	ns min	Data Valid Hold Time
t_{CWS}	30	40	50	ns min	$\overline{CSMSB}$ or $\overline{CSLSB}$ to $\overline{WR}$ Setup Time
t_{CWH}	15	20	25	ns min	$\overline{CSMSB}$ or $\overline{CSLSB}$ to $\overline{WR}$ Hold Time
t_{LWS}	30	40	50	ns min	$\overline{LDAC}$ to $\overline{WR}$ Setup Time
t_{LWH}	15	20	25	ns min	$\overline{LDAC}$ to $\overline{WR}$ Hold Time
t_{WR}	170	200	240	ns min	Write Pulse Width

AC PERFORMANCE CHARACTERISTICS

These characteristics are included for Design Guidance only and are not subject to test. (V_{REF} = +10V; I_{OUT} = AGND = 0V, Output Amplifier is AD544 except where stated)

Parameter	Version	V_{DD} = +5V T_A = +25°C	V_{DD} = +5V T_A = T_{MIN}, T_{MAX}	V_{DD} = +12V to +15V T_A = +25°C	V_{DD} = +12V to +15V T_A = T_{MIN}, T_{MAX}	Units	Test Conditions/Comments
Output Current Settling Time		1.5	–	1	–	µs typ	To 0.01% of full scale range. I_{OUT} load = 100Ω, C_{EXT} = 13pF. DAC register alternately loaded with all 1s and all 0s
Digital to Analog Glitch Impulse		400	–	330	–	nV-sec typ	Measured with V_{REF} = 0V, I_{OUT} load = 100Ω, C_{EXT} = 13pF. DAC register alternately loaded with all 1s and all 0s
Multiplying Feedthrough Error[3]		3	5	3	5	mV p-p typ	V_{REF} = ±5V, 10kHz sine wave DAC register loaded with all 0s.
Total Harmonic Distortion		−85	–	−85	–	dB typ	V_{REF} = 6V rms @ 1kHz. DAC register loaded with all 1s.
Power Supply Rejection Δ GAIN/Δ V_{DD}		±0.015	±0.03	±0.01	±0.02	% per % max	ΔV_{DD} = ±5%
Output Capacitance I_{OUT} (Pin 1)		200 100	200 100	200 100	200 100	pF max pF max	DAC register loaded with all 1s. DAC register loaded with all 0s.
Output Noise Voltage Density (10Hz–100kHz)		15	–	15	–	nV/√Hz typ	Measured between R_{FB} and I_{OUT}

NOTES
[1]Guaranteed by design but not production tested.
[2]Temperature range as follows: J, K Versions; 0 to +70°C
A, B Versions; −40°C to +85°C
S, T Versions; −55°C to +125°C
[3]Feedthrough can be further reduced by connecting the metal lid on the ceramic package (Suffix D) to DGND.
Specifications subject to change without notice.

ABSOLUTE MAXIMUM RATINGS*

(T_A = +25°C unless otherwise noted)

V_{DD} (Pin 18) to DGND	+17V
V_{REF} (Pin 19) to AGND	±25V
V_{RFB} (Pin 20) to AGND	±25V
Digital Input Voltage (Pins 4–17) to DGND	−0.3V, V_{DD}
$V_{PIN\ 1}$ to DGND	−0.3V, V_{DD}
AGND to DGND	−0.3V, V_{DD}
Power Dissipation (Any Package)	
To +75°C	450mW
Derates above +75°C	6mW/°C
Operating Temperature Range	
Commercial (J, K Versions)	0 to +70°C
Industrial (A, B Versions)	−40°C to +85°C
Extended (S, T Versions)	−55°C to +125°C
Storage Temperature	−65°C to +150°C
Lead Temperature (Soldering, 10secs)	+300°C

*Stresses above those listed under "Absolute Maximum Ratings" may cause permanent damage to the device. This is a stress rating only and functional operation of the device at these or any other conditions above those indicated in the operational sections of this specification is not implied. Exposure to absolute maximum rating conditions for extended periods may affect device reliability.

CAUTION:

ESD (Electro-Static-Discharge) sensitive device. The digital control inputs are Zener protected; however, permanent damage may occur on unconnected devices subject to high energy electrostatic fields. Unused devices must be stored in conductive foam or shunts. The foam should be discharged to the destination socket before devices are removed.

PIN CONFIGURATIONS

DIP

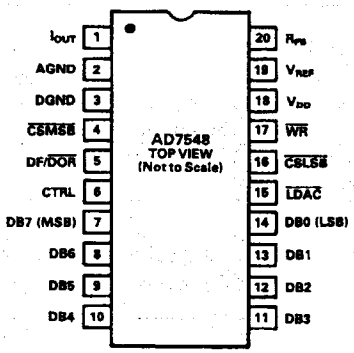

LCCC

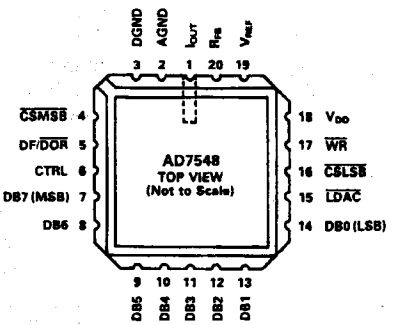

PLCC

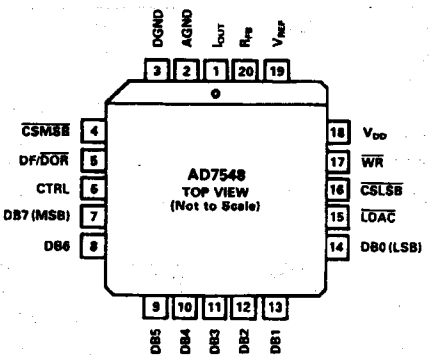

ORDERING INFORMATION[1,2]

Relative Accuracy T_{min}–T_{max}	Full-Scale Error T_{min}–T_{max}	Temperature Range and Package Options[3] 0 to +70°C	−25°C to +85°C	−55°C to +125°C
		Plastic DIP (N-20)	Hermetic (Q-20)	Hermetic (Q-20)
±1LSB	±6LSB	AD7548JN	AD7548AQ	AD7548SQ
±1/2LSB	±3LSB	AD7548KN	AD7548BQ	AD7548TQ
		PLCC[4] (P-20A)		LCCC[5] (E-20A)
±1LSB	±6LSB	AD7548JP		AD7548SE
±1/2LSB	±3LSB	AD7548KP		AD7548TE

NOTES

[1]To order MIL-STD-883, Class B processed parts, add/883B to part number. Contact your local sales office for military data sheet.

[2]Analog Devices reserves the right to ship ceramic (package outline D-20) packages in lieu of cerdip (package outline Q-20) packages.

[3]See Section 13 for package outline information.

[4]PLCC: Plastic Leaded Chip Carrier.

[5]LCCC: Leadless Ceramic Chip Carrier.

PIN FUNCTION DESCRIPTION

PIN	MNEMONIC	DESCRIPTION
1	I_{OUT}	DAC current OUT bus. Normally terminated at virtual ground of output amplifier.
2	AGND	Analog Ground.
3	DGND	Digital Ground.
4	$\overline{CSMSB}$	Chip Select Most Significant (MS) Byte. Active Low Input. Used in combination with $\overline{WR}$ to load external data into the input register or in combination with $\overline{WR}$ and $\overline{LDAC}$ to load external data into both input and DAC registers.
5	DF/$\overline{DOR}$	Data Format/Data Override. When this input is LOW, data in the DAC register is forced to one of two override codes selected by CTRL. When the override signal is removed, the DAC output returns to reflect the value in the DAC register. With DF/$\overline{DOR}$ HIGH, CTRL selects either a left or right justified input data format. For normal operation, DF/$\overline{DOR}$ is held HIGH.

DF/$\overline{DOR}$	CTRL	FUNCTION
0	0	DAC register contents overridden by all 0's
0	1	DAC register contents overriden by all 1's
1	0	Left-justified input data selected
1	1	Right-justified input data selected

PIN	MNEMONIC	DESCRIPTION
6	CTRL	Control Input. See pin 5 description.

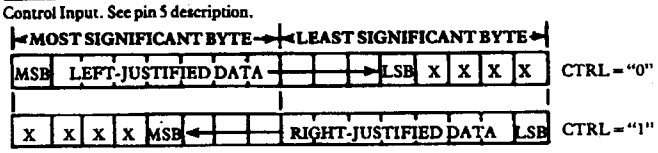

X = Don't care states.

PIN	MNEMONIC	DESCRIPTION
7	DB7	Data Bit 7. Most Significant Bit (MSB).
8	DB6	Data Bit 6.
9	DB5	Data Bit 5.
10	DB4	Data Bit 4.
11	DB3	Data Bit 3.
12	DB2	Data Bit 2.
13	DB1	Data Bit 1.
14	DB0	Data Bit 0. Least Significant Bit (LSB).
15	$\overline{LDAC}$	Load DAC Input, active LOW. This signal, in combination with others, is used to load the DAC register from either the input register or the external data bus.
16	$\overline{CSLSB}$	Chip Select Least Significant (LS) Byte. Active LOW input. Used in combination with $\overline{WR}$ to load external data into the input register or in combination with $\overline{WR}$ and $\overline{LDAC}$ to load external data into both input and DAC registers.
17	$\overline{WR}$	WRITE Input. This active low signal, in combination with others is used in loading external data into the AD7548 input register and in transferring data from the input register to the DAC register.

$\overline{WR}$	$\overline{CSMSB}$	$\overline{CSLSB}$	$\overline{LDAC}$	FUNCTION
0	1	0	1	Load LS Byte to Input Register.
0	1	0	0	Load LS Byte to Input Register and DAC Register.
0	0	1	1	Load MS Byte to Input Register.
0	0	1	0	Load MS Byte to Input Register and DAC Register.
0	1	1	0	Load Input Register to DAC Register.
1	X	X	X	No Data Transfer

PIN	MNEMONIC	DESCRIPTION
18	V_{DD}	+5V to +15V Supply Input.
19	V_{REF}	Reference Voltage Input.
20	R_{FB}	Feedback Resistor. Used for normal D/A conversion.

CONTROL INPUT INFORMATION

Figure 1a shows the data load timing diagram for the AD7548.

Figure 1b shows the simplified input control structure of the AD7548.

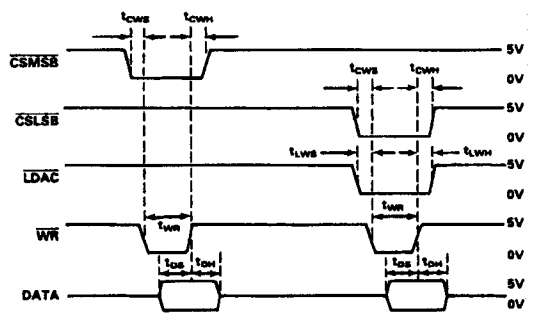

NOTES
1. ALL INPUT SIGNAL RISE AND FALL TIMES MEASURED FROM 10% TO 90% OF +5V. $t_r = t_f = 20ns$.
2. TIMING MEASUREMENT REFERENCE LEVEL IS $\frac{V_H + V_L}{2}$.
3. $\overline{CSMSB}$ (PIN 4) AND $\overline{CSLSB}$ (PIN 16) MAY BE INTERCHANGED.
4. FOR LEFT-JUSTIFIED DATA CTRL = +0V WITH DF/$\overline{DOR}$ = +5V. FOR RIGHT-JUSTIFIED DATA CTRL = +5V WITH DF/$\overline{DOR}$ = +5V.

Figure 1a. AD7548 Timing Diagram

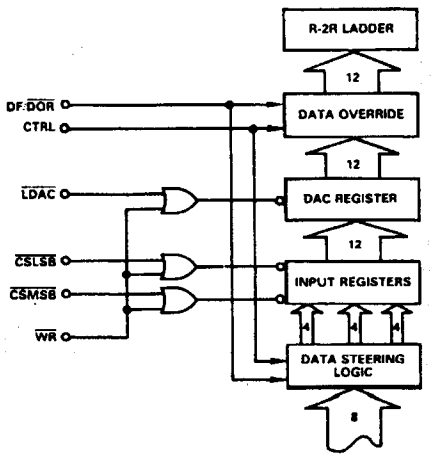

Figure 1b. Simplified AD7548 Input Control Structure

GENERAL CIRCUIT INFORMATION

The simplified D/A circuit is shown in Figure 2. An inverted R-2R ladder structure is used, which steers binarily weighted currents between I_{OUT} and AGND, thus maintaining a constant current in each ladder leg independent of the switch state.

The input resistance at V_{REF} is constant and equal to the value "R" in Figure 2. Since the input resistance is constant, the reference terminal can be driven by a reference voltage or a reference current, ac or dc, of positive or negative polarity. (If a current source is used, a low temperature coefficient external R_{FB} is recommended to define scale factor).

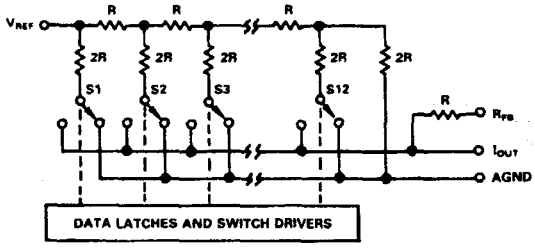

Figure 2. AD7548 Simplified Functional Diagram

EQUIVALENT CIRCUIT ANALYSIS

Figure 3 shows an equivalent circuit for the analog section of the AD7548 D/A converter. The current source $I_{LEAKAGE}$ is composed of surface and junction leakages. The resistor R_O, denotes the equivalent output resistance of the DAC which varies with input code (excluding all 0's code) from 0.8R to 2R, where R is typically 11kΩ. C_{OUT} is the capacitance due to the current steering switches and varies from about 50pF to 120pF (typical values) depending upon the digital input. $g(V_{REF}, N)$ is the Thevenin equivalent voltage generator due to the reference input voltage, V_{REF}, and the transfer function of R-2R ladder, N.

For further information on CMOS multiplying D/A converters refer to "Application Guide to CMOS Multiplying D/A Converters" available from Analog Devices, Publication Number G479–15–8/78.

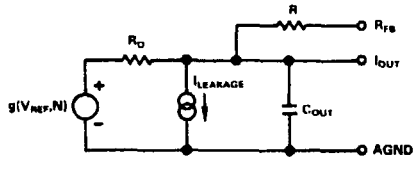

Figure 3. AD7548 Equivalent Analog Output Circuit

DATA LOADING

The AD7548 accepts incoming data in either left-justified format or right-justified format depending on the control inputs DF/$\overline{DOR}$ and CTRL.

(See pin description of DF/$\overline{DOR}$ and CTRL on preceding page).

Two operating modes are possible for controlling the transfer of data from the input register to the DAC register, the automatic transfer mode and the strobed transfer mode.

AUTOMATIC TRANSFER MODE

This is the simplest and fastest method of transferring data to the DAC register. It is facilitated by connecting $\overline{LDAC}$ to either $\overline{CSMSB}$, as shown in Figure 10, or $\overline{CSLSB}$.

Figure 4 shows the timing diagram for automatic transfer of 8 +4-bit data to the DAC register. The first write cycle loads the first byte of data to the input register. The second write cycle loads the second byte of data to the input register and automatically transfers both bytes to the DAC register.

Updating a single byte (High or Low) in the DAC register can be achieved in one write cycle using the automatic transfer mode.

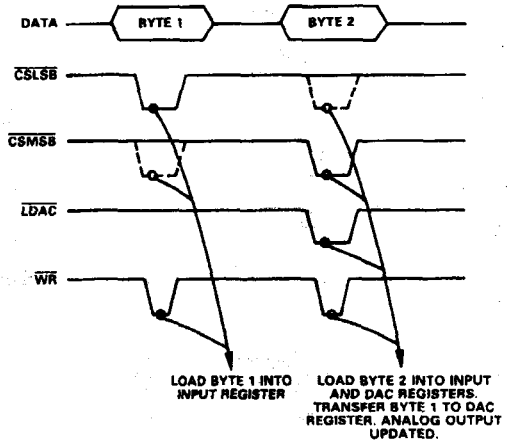

Figure 4. Automatic Transfer Mode

STROBED TRANSFER MODE

Figure 5 shows the timing diagram for the strobed transfer of 8 +4-bit data to the DAC register. Three write cycles are required for this transfer mode. The first two write cycles sequentially load bytes 1 and 2 into the input register. The third write cycle transfers data from the input register to the DAC register.

The strobed transfer mode allows the DAC registers of several AD7548's to be updated simultaneously, as shown in Figure 13, by means of a master strobe signal connected to the $\overline{LDAC}$ of each device.

A single byte of data (High or Low) can be transferred to the DAC register in two write cycles using the strobed transfer mode.

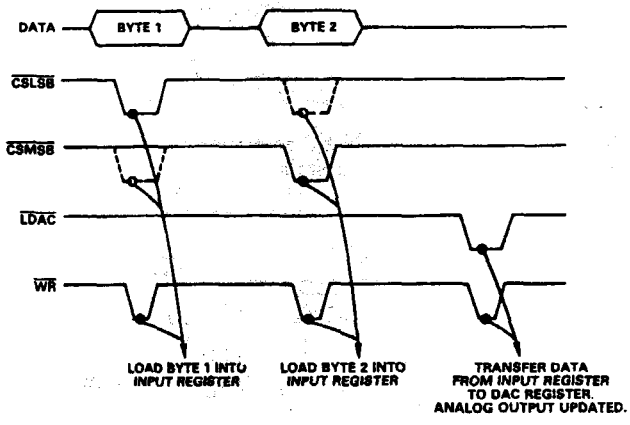

Figure 5. Strobed Transfer Mode

DATA OVERRIDE

The contents of the DAC register can be overridden by pulling DF/$\overline{DOR}$ (pin 5) LOW. The CTRL (pin 6) input then determines whether the DAC register data is overidden by all 0s (CTRL LOW) or all 1s (CTRL HIGH). This feature allows the user to calibrate the AD7548 in circuits such as Figure 6 without calling on the microprocessor to load calibration data.

UNIPOLAR BINARY OPERATION (2-QUADRANT MULTIPLICATION)

Figure 6 shows the analog circuit connections required for unipolar binary operation. With a dc input voltage or current (positive or negative polarity) applied at pin 19, the circuit is a unipolar D/A converter. With an ac input voltage the circuit provides 2-quadrant multiplication (digitally controlled attenuation).

Table I shows the code relationship for the circuit of Figure 6.

For full scale trimming the DAC register is loaded with 1111 1111 1111. This is most easily accomplished by using the data override function. R1 is then adjusted for $V_{OUT} = -V_{IN}$ (4095/4096). Alternatively full scale can be adjusted by omitting R1 and R2 and trimming the reference voltage magnitude.

Capacitor C1 provides phase compensation and helps prevent overshoot and ringing when using high speed op amps.

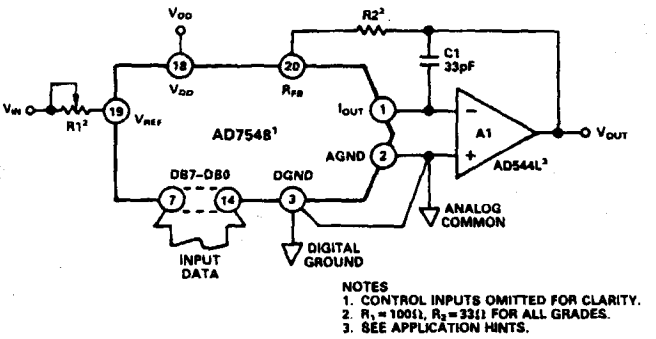

Figure 6. Unipolar Binary Operation

Binary Number in DAC Register MSB LSB	Analog Output, V_{OUT}
1111 1111 1111	$-V_{IN}\left(\frac{4095}{4096}\right)$
1000 0000 0000	$-V_{IN}\left(\frac{2048}{4096}\right) = -1/2V_{IN}$
0000 0000 0001	$-V_{IN}\left(\frac{1}{4096}\right)$
0000 0000 0000	0V

Table I. Unipolar Binary Code Table for Circuit of Figure 6

BIPOLAR OPERATION (4-QUADRANT MULTIPLICATION)

Figure 7 and Table II illustrate the recommended circuit and code relationship for bipolar operation. The circuit uses offset binary input coding. However, 2's complement coding can be accommodated if the MSB is inverted (done in software) before data is loaded into the DAC.

With the DAC register loaded to 1000 0000 0000, adjust R1 for $V_{OUT} = 0V$ (alternatively one can omit R1 and R2 and adjust the ratio of R3 and R4 for $V_{OUT} = 0V$). Full scale trimming can be accomplished by adjusting the amplitude of V_{IN} or by varying the value of R5.

R3, R4 and R5 must be selected to match within 0.01% and they should be the same type of resistor (preferably metal film) so that their temperature coefficients match. Mismatch of R3 to R4 causes both offset and full scale error. Mismatch of R5 to R4 and R3 causes full scale error.

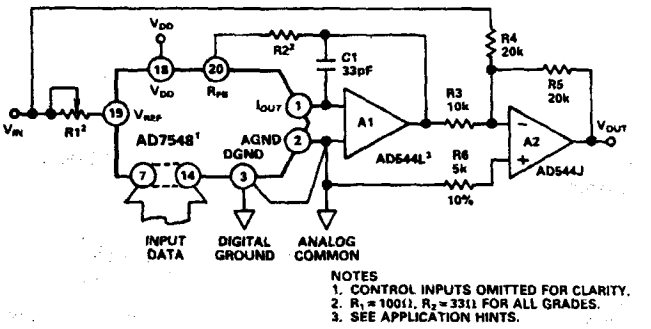

Figure 7. Bipolar Operation (Offset Binary Coding)

Binary Number in DAC Register MSB LSB	Analog Output, V_{OUT}
1111 1111 1111	$+V_{IN}\left(\frac{2047}{2048}\right)$
1000 0000 0001	$+V_{IN}\left(\frac{1}{2048}\right)$
1000 0000 0000	0V
0111 1111 1111	$-V_{IN}\left(\frac{1}{2048}\right)$
0000 0000 0000	$-V_{IN}\left(\frac{2048}{2048}\right)$

Table II. Bipolar Code Table for Offset Binary Circuit of Figure 7

SINGLE SUPPLY OPERATION

Figure 8 shows the AD7548 connected in a voltage switching mode. The input voltage is connected to I_{OUT}. The D/A converter output voltage is taken from the V_{REF} pin and has a constant impedance equal to R. R_{FB} is not used in this circuit. The input voltage V_{IN} must always be positive with respect to AGND in order to prevent an internal diode from turning on. To maintain linearity the input voltage should remain within 2.5V of AGND with V_{DD} from +12V to +15V.

The output voltage V_{OUT} of Figure 8 is expressed as

$$V_{OUT} = (V_{IN})\,(D)\left(\frac{R_1 + R_2}{R_1}\right)$$

Where D is a fractional representation of the digital input word ($0 \leq D \leq 4095/4096$).

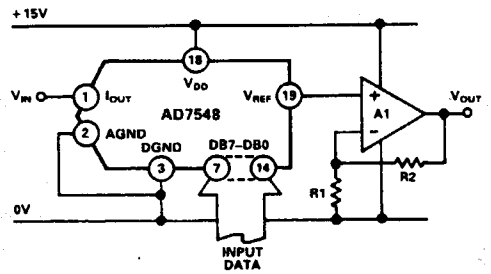

Figure 8. Single Supply Operation Using Voltage Switching Mode

APPLICATION HINTS

Output Offset: CMOS D/A converters in circuits such as Figures 6 and 7 exhibit a code dependent output resistance which in turn cause a code dependent amplifier noise gain. The effect is a code dependent differential nonlinearity term at the amplifier output which, depends on V_{OS} where V_{OS} is the amplifier input offset voltage. To maintain monotonic operation it is recommended that V_{OS} be no greater than $(25 \times 10^{-6})(V_{REF})$ over the temperature range of operation. Suitable op amps are AD517L and AD544L. The AD517L is best suited for fixed reference applications with low bandwidth requirements: it has extremely low offset (50μV) and in most applications will not require an offset trim. The AD544L has a much wider bandwidth and higher slew rate and is recommended for multiplying and other applications requiring fast settling. An offset trim on the AD544L may be necessary in some circuits.

General Ground Management: AC or transient voltages between AGND and DGND can cause noise injection into the analog output. The simplest method of ensuring that voltages at AGND and DGND are equal is to tie AGND and DGND together at the AD7548. In more complex systems where the AGND and DGND intertie is on the backplane, it is recommended that two diodes be connected in inverse parallel between the AD7548 AGND and DGND pins (1N914 or equivalent).

Temperature Coefficients: The gain temperature coefficient of the AD7548 has a maximum value of 5ppm/°C and typical value of 2ppm/°C. This corresponds to worst case gain shifts of 2LSBs and 0.8LSBs respectively over a 100°C temperature range. When trim resistors R1 and R2 are used to adjust full scale range, the temperature coefficient of R1 and R2 should also be taken into account. The reader is referred to Analog Devices Application Note "Gain Error and Gain Temperature Coefficient of CMOS Multiplying DACs", Publication Number E630–10–6/81.

High Frequency Considerations: AD7548 output capacitance works in conjunction with the amplifier feedback resistance to add a pole to the open loop response. This can cause ringing or oscillation. Stability can be restored by adding a phase compensation capacitor in parallel with the feedback resistor.

Feedthrough: The dynamic performance of the AD7548 will depend upon the gain and phase stability of the output amplifier, together with the optimum choice of PC board layout and decoupling components. A suggested printed circuit layout for Figure 6 is shown in Figure 9 which minimizes feedthrough from V_{REF} to the output in multiplying applications.

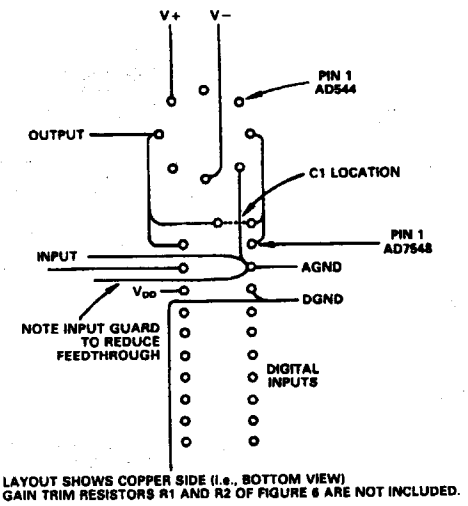

Figure 9. Suggested Layout for AD7548 and Op Amp

For additional information on multiplying DACs refer to "Application Guide to CMOS Multiplying D/A Converters", Publication Number G479–15–8/78, available from Analog Devices.

MICROPROCESSOR INTERFACING

AD7548 – MC6800 INTERFACE

A typical 6800 configuration using the automatic transfer mode of the AD7548 is shown in Figure 10. Table III gives a sample loading routine written in re-entrant form. Data load and store instructions use extended addressing. The 12-bit data to be passed to the subroutine is stored in locations XXYY and XXYY + 1. The data is considered right-justified with the four most significant bits occupying the lower half of XXYY + 1. The AD7548 is assigned a base address of PPQQ. This address selects the low byte register of the AD7548. Address PPQQ + 1 selects both the high byte register and the $\overline{LDAC}$ control input.

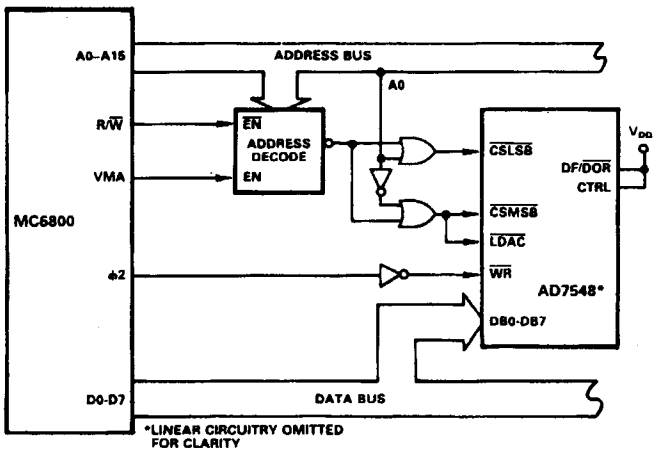

Figure 10. AD7548 – MC6800 Interface (Automatic Transfer Mode)

	JSR	WWZZ	Jump to AD7548 subroutine
WWZZ	PSH A		Push A onto stack
	TPA		
	PSH A		Push CCR onto stack
	LDA A	$XXYY	
	STA A	$PPQQ	Load low byte to AD7548
	LDA A	$XXYY + 1	
	STA A	$PPQQ + 1	Load high byte to AD7548 and update analog output
	PUL A		
	TAP		Pull CCR from stack
	PUL A		Pull A from stack
	RTS		Return to main program

Table III. Sample Routine for AD7548 – MC6800 Interface

AD7548 – 8085A INTERFACE

Figure 11 shows a typical AD7548 to 8085A microprocessor interface configured for automatic transfer of 8 + 4-bit right-justified data. Table IV gives a sample loading routine written in re-entrant form. The 12-bit data to be passed to the subroutine is stored in locations XXYY and XXYY + 1. The four most significant data bits occupy the lower half of XXYY + 1. As before, addresses PPQQ and PPQQ + 1 select the $\overline{CSLSB}$ and $\overline{CSMSB}/\overline{LDAC}$ control inputs respectively. Since only two instructions (LHLD, SHLD) are required to both fetch and load the 12-bit data word to the AD7548, it may be more efficient to insert these instructions as required in the main program rather than use a subroutine such as illustrated here.

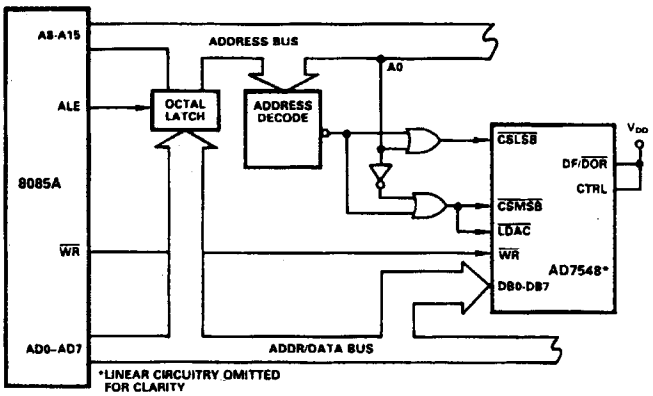

Figure 11. AD7548 – 8085A Interface (Automatic Transfer Mode)

	CALL	7548	
7548	PUSH	PSW	Push register contents onto stack
	PUSH	H	
	LHLD	XXYY	Fetch 12-bit data
	SHLD	PPQQ	Load 12-bit data
	POP	H	Pop register contents from stack
	POP	PSW	
	RET		Return to main program

Table IV. Sample Routine for AD7548–8085A Interface

AD7548 – MC6809 INTERFACE

The AD7548 can be interfaced to the MC6809 microprocessor as shown in Figure 12 for automatic transfer of 8 + 4-bit data. Similar to the 8085A instructions LHLD and SHLD, the 6809 has two instructions to fetch and store 12-bit (16-bit) data to the AD7548, LDD and STD. However, in the 6809, the high byte of data is moved first, then the low byte (this is the opposite of the 8085A). This means that if the 12-bit data is assumed to reside at addresses XXYY and XXYY + 1 then XXYY must contain the high byte. It also means that the address decoding logic of Figure 11 must be slightly changed so that the even-order AD7548 address, PPQQ from before, selects the $\overline{CSMSB}$ input to load the high byte first. In this automatic transfer configuration $\overline{LDAC}$ is tied to the $\overline{CSLSB}$ input. The AD7548 analog output can thus be updated using only two instructions as follows:

```
LDD    $XXYY
STD    $PPQQ
```

The strobed transfer configuration is shown in Figure 13 with a dedicated decoder output assigned to each chip select input. The common $\overline{LDAC}$ signal allows simultaneous update of both AD7548 DAC registers.

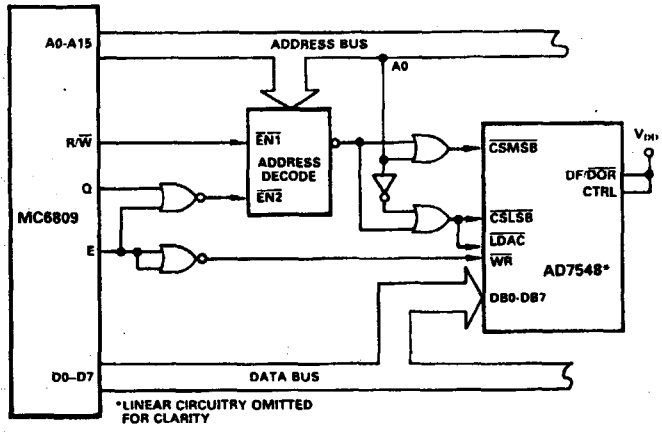

Figure 12. AD7548 – MC6809 Interface (Automatic Transfer Mode)

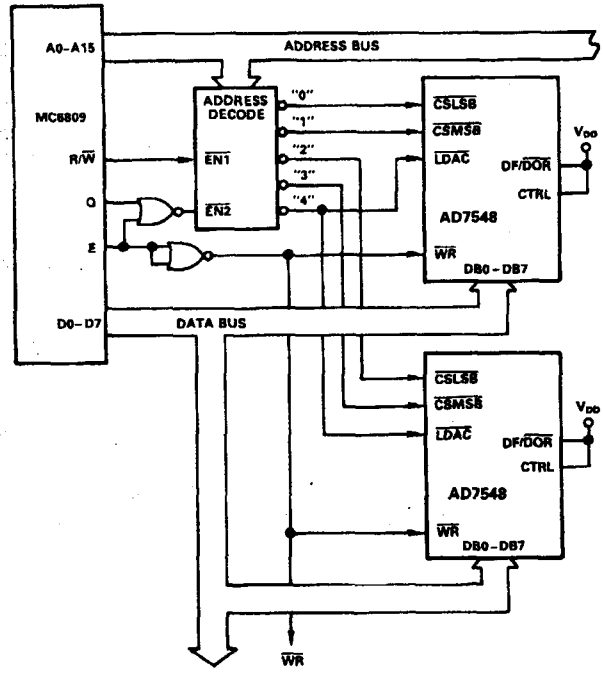

Figure 13. AD7548 – MC6809 Interface (Strobed Transfer Mode)

AD7548 – 6502 INTERFACE

Figure 14 shows a typical AD7548 to 6502 microprocessor interface configured for automatic transfer of right-justified data. As a programming example, Figure 15 shows a flow chart for producing a 12-bit (4095-step-max) voltage ramp under 6502 control. Index registers X and Y of the 6502 form a 12-bit counter with the X-register holding the low byte of data and the Y-register the high byte. Table V shows the program listing. The X-register is compared with FF_H and the Y-register with 10_H to determine when the ramp voltage has reached its maximum value (FFF_H). By changing the comparison data in the program the maximum ramp output voltage can be varied from levels corresponding to FFF_H down to 000_H. In the program listing of Table V the AD7548 has been assigned contiguous addresses 0400 (low byte) and 0401 (high byte and DAC register).

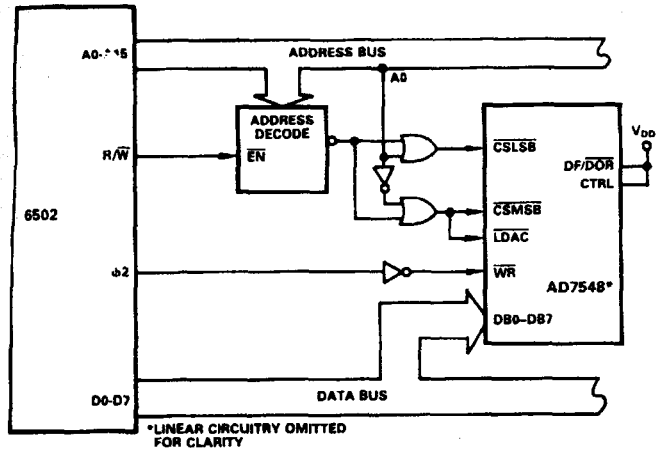

Figure 14. AD7548 – 6502 Interface (Automatic Transfer Mode)

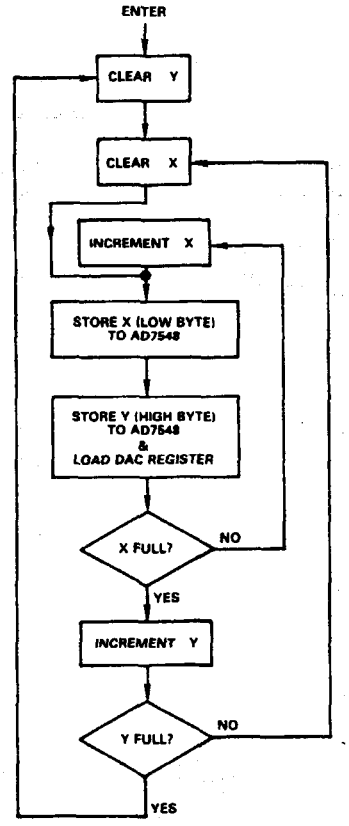

Figure 15. Flow Chart for Voltage Ramp Generation

ADDRESS	OP-CODE	MNEMONIC	OPERAND
0000	A0	LDY	# 00
01	00		
02	A2	LDX	# 00
03	00		
04	4C	JMP	0008
05	08		
06	00		
07	E8	INX	
08	8E	STX	0400
09	00		
0A	04		
0B	8C	STY	0401
0C	01		
0D	04		
0E	E0	CPX	# FF
0F	FF		
10	D0	BNE	0007
11	F5		
12	C8	INY	
13	C0	CPY	# 10
14	10		
15	D0	BNE	0002
16	EB		
17	FO	BEQ	0000
0018	E7		

Table V. Program Listing for Figure 15

AD7548 – Z80 INTERFACE

Figure 16 shows a typical AD7548 to Z80 microprocessor interface configured for automatic transfer of right-justified data. Similar to the 8085A and 6809 cases, 16-bit load instructions are available in the Z80 which can fetch and load 12-bit data to the AD7548. Since the low byte of data is moved first and assuming the 12-bit data resides at addresses XXYY and XXYY + 1, address XXYY must contain the low byte. As before, addresses PPQQ and PPQQ + 1 select the AD7548 $\overline{CSLSB}$ and $\overline{CSMSB}$/$\overline{LDAC}$ control inputs respectively. Choosing the Z80 register pair BC to hold the 12-bit data, the two instructions required to update the AD7548 analog output are as follows:

LD BC, (XXYY)
LD (PPQQ), BC

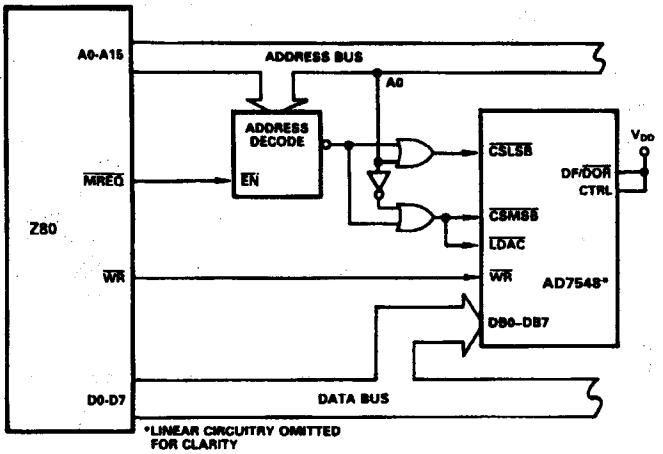

Figure 16. AD7548 – Z80 Interface (Automatic Transfer Mode)

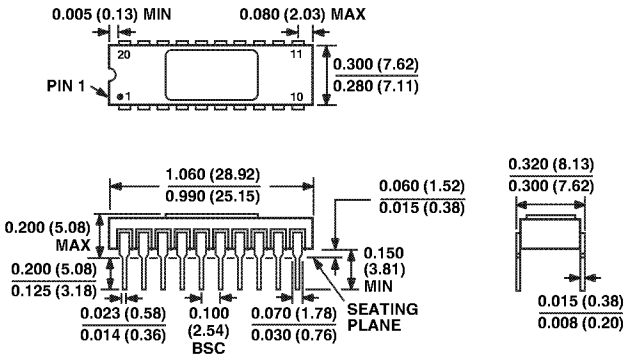

CONTROLLING DIMENSIONS ARE IN INCHES; MILLIMETER DIMENSIONS (IN PARENTHESES) ARE ROUNDED-OFF INCH EQUIVALENTS FOR REFERENCE ONLY AND ARE NOT APPROPRIATE FOR USE IN DESIGN

20-Lead Plastic Dual In-Line Package [PDIP]
(N-20)
Dimensions shown in inches and (millimeters)

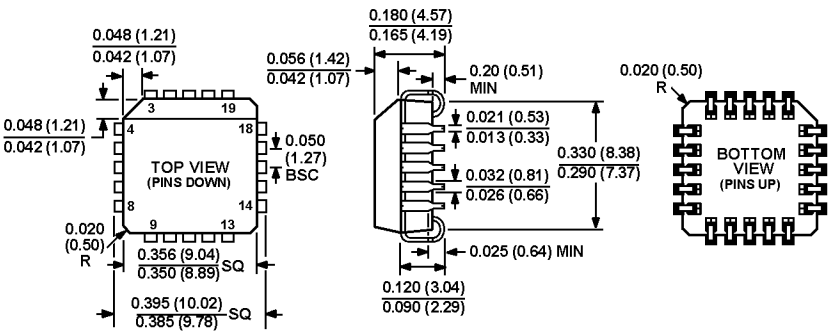

COMPLIANT TO JEDEC STANDARDS MO-047AA
CONTROLLING DIMENSIONS ARE IN INCHES; MILLIMETER DIMENSIONS (IN PARENTHESES) ARE ROUNDED-OFF INCH EQUIVALENTS FOR REFERENCE ONLY AND ARE NOT APPROPRIATE FOR USE IN DESIGN

Figure 40. 20-Lead Plastic Leaded Chip Carrier [PLCC]
(P-20A)
Dimensions shown in inches and (mm)

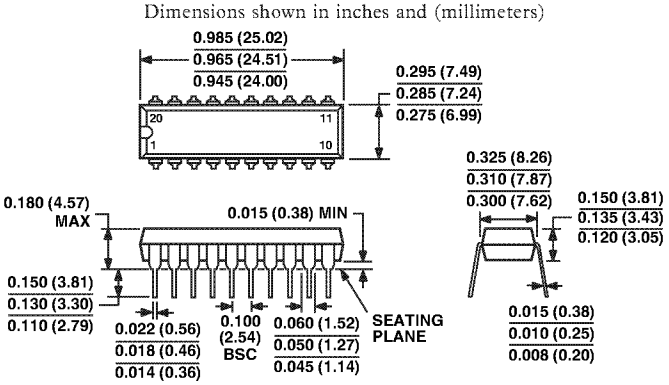

COMPLIANT TO JEDEC STANDARDS MO-095-AE
CONTROLLING DIMENSIONS ARE IN INCHES; MILLIMETER DIMENSIONS (IN PARENTHESES) ARE ROUNDED-OFF INCH EQUIVALENTS FOR REFERENCE ONLY AND ARE NOT APPROPRIATE FOR USE IN DESIGN

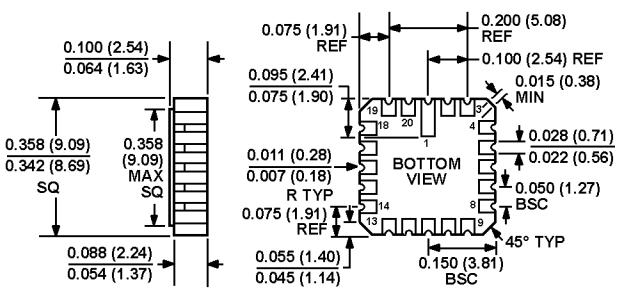

CONTROLLING DIMENSIONS ARE IN INCHES; MILLIMETER DIMENSIONS (IN PARENTHESES) ARE ROUNDED-OFF INCH EQUIVALENTS FOR REFERENCE ONLY AND ARE NOT APPROPRIATE FOR USE IN DESIGN.

022106-A

Figure 24. 20-Terminal Ceramic Leadless Chip Carrier [LCC]
(E-20)
Dimensions shown in inches and (millimeters)

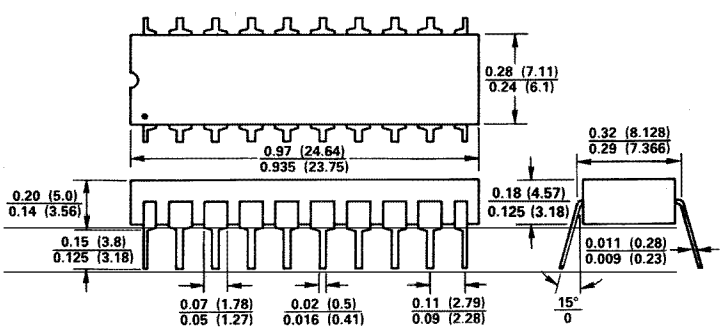

20-Lead Cerdip
(Q-20)

OCEAN CHIPS
Океан Электроники
Поставка электронных компонентов

Компания «Океан Электроники» предлагает заключение долгосрочных отношений при поставках импортных электронных компонентов на взаимовыгодных условиях!

Наши преимущества:

- Поставка оригинальных импортных электронных компонентов напрямую с производств Америки, Европы и Азии, а так же с крупнейших складов мира;
- Широкая линейка поставок активных и пассивных импортных электронных компонентов (более 30 млн. наименований);
- Поставка сложных, дефицитных, либо снятых с производства позиций;
- Оперативные сроки поставки под заказ (от 5 рабочих дней);
- Экспресс доставка в любую точку России;
- Помощь Конструкторского Отдела и консультации квалифицированных инженеров;
- Техническая поддержка проекта, помощь в подборе аналогов, поставка прототипов;
- Поставка электронных компонентов под контролем ВП;
- Система менеджмента качества сертифицирована по Международному стандарту ISO 9001;
- При необходимости вся продукция военного и аэрокосмического назначения проходит испытания и сертификацию в лаборатории (по согласованию с заказчиком);
- Поставка специализированных компонентов военного и аэрокосмического уровня качества (Xilinx, Altera, Analog Devices, Intersil, Interpoint, Microsemi, Actel, Aeroflex, Peregrine, VPT, Syfer, Eurofarad, Texas Instruments, MS Kennedy, Miteq, Cobham, E2V, MA-COM, Hittite, Mini-Circuits, General Dynamics и др.);

Компания «Океан Электроники» является официальным дистрибьютором и эксклюзивным представителем в России одного из крупнейших производителей разъемов военного и аэрокосмического назначения **«JONHON»**, а так же официальным дистрибьютором и эксклюзивным представителем в России производителя высокотехнологичных и надежных решений для передачи СВЧ сигналов **«FORSTAR»**.

AVIC JONHON

«JONHON» (основан в 1970 г.)

Разъемы специального, военного и аэрокосмического назначения:

(Применяются в военной, авиационной, аэрокосмической, морской, железнодорожной, горно- и нефтедобывающей отраслях промышленности)

«FORSTAR» (основан в 1998 г.)

ВЧ соединители, коаксиальные кабели, кабельные сборки и микроволновые компоненты:

(Применяются в телекоммуникациях гражданского и специального назначения, в средствах связи, РЛС, а так же военной, авиационной и аэрокосмической отраслях промышленности).

FORSTAR®

Телефон: 8 (812) 309-75-97 (многоканальный)
Факс: 8 (812) 320-03-32
Электронная почта: ocean@oceanchips.ru
Web: http://oceanchips.ru/
Адрес: 198099, г. Санкт-Петербург, ул. Калинина, д. 2, корп. 4, лит. А