A5191HRT

HART Modem

Description

The A5191HRT is a single−chip, CMOS modem for use in highway addressable remote transducer (HART) field instruments and masters. The modem and a few external passive components provide all of the functions needed to satisfy HART physical layer requirements including modulation, demodulation, receive filtering, carrier detect, and transmit−signal shaping.

The A5191HRT uses phase continuous frequency shift keying (FSK) at 1200 bits per second. To conserve power the receive circuits are disabled during transmit operations and vice versa. This provides the half−duplex operation used in HART communications.

Features

- Single−chip, Half−duplex 1200 Bits per Second FSK Modem
- Bell 202 Shift Frequencies of 1200 Hz and 2200 Hz
- 3.0 V – 5.5 V Power Supply
- Transmit−signal Wave Shaping
- Receive Band−pass Filter
- Low Power: Optimal for Intrinsically Safe Applications
- Compatible with 3.3 V or 5 V Microcontroller
- Internal Oscillator Requires 460.8 kHz Crystal or Ceramic Resonator
- Meets HART Physical Layer Requirements
- Industrial Temperature Range of −40°C to +85°C
- Available in 28−pin PLCC, 32−pin QFN and 32−pin LQFP Packages
- These are Pb−Free Devices

Applications

- HART Multiplexers
- HART Modem Interfaces
- 4 – 20 mA Loop Powered Transmitters

ON Semiconductor®

http://onsemi.com

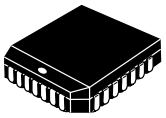

PLCC−28
P SUFFIX
CASE 776AA

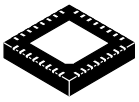

QFN−32
N SUFFIX
CASE 488AM

LQFP−32
L SUFFIX
CASE 561AB

MARKING DIAGRAMS
(Top Views)

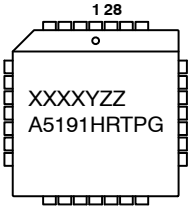

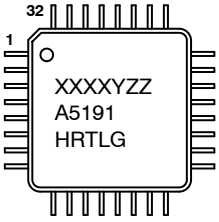

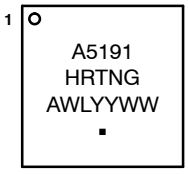

A5191HRTxx = Specific Device Code
xx = P (PLCC), L (LQFP) or N (QFN)
XXXX = Date Code
Y = Plant Identifier
ZZ = Traceability Code
A = Assembly Location
WL = Wafer Lot
YY = Year
WW = Work Week
G or ▪ = Pb−Free Package

ORDERING INFORMATION

See detailed ordering and shipping information in the package dimensions section on page 14 of this data sheet.

© Semiconductor Components Industries, LLC, 2013

March, 2013 – Rev. 6

Publication Order Number:
A5191HRT/D

BLOCK DIAGRAM

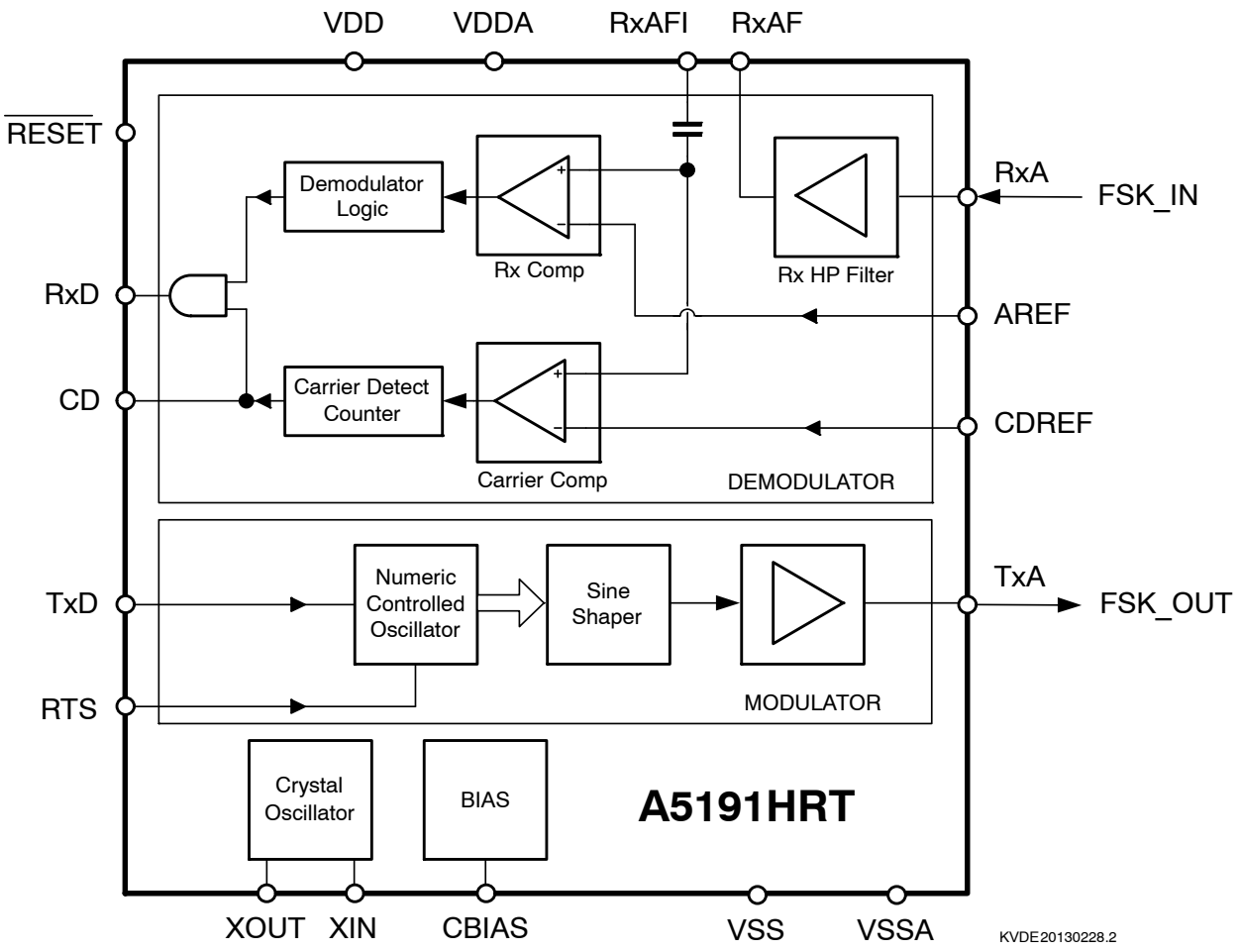

Figure 1. Block Diagram A5191HRT

ELECTRICAL SPECIFICATIONS

Table 1. ABSOLUTE MAXIMUM RATINGS (Notes 1 and 2)

Symbol	Parameter	Min	Max	Units
T_A	Ambient	−40	+85	°C
T_S	Storage Temperature	−55	150	°C
V_{DD}	Supply Voltage	−0.3	6.0	V
V_{IN}, V_{OUT}	DC Input, Output	−0.3	VDD + 0.3	V

Stresses exceeding Maximum Ratings may damage the device. Maximum Ratings are stress ratings only. Functional operation above the Recommended Operating Conditions is not implied. Extended exposure to stresses above the Recommended Operating Conditions may affect device reliability.

1. CMOS devices are damaged by high−energy electrostatic discharge. Devices must be stored in conductive foam or with all pins shunted. Precautions should be taken to avoid application of voltages higher than the maximum rating. Stresses above absolute maximum ratings may result in damage to the device.
2. Remove power before insertion or removal of this device.

Table 2. DC CHARACTERISTICS (V_{DD} = 3.0 V to 5.5 V, V_{SS} = 0 V, T_A = −40°C to +85°C)

Symbol	Parameter	V_{DD}	Min	Typ	Max	Units
V_{IL}	Input Voltage, Low	3.0 – 5.5 V			0.3 * V_{DD}	V
V_{IH}	Input Voltage, High	3.0 – 5.5 V	0.7 * V_{DD}			V
V_{OL}	Output Voltage, Low (I_{OL} = 0.67 mA)	3.0 – 5.5 V			0.4	V
V_{OH}	Output Voltage, High (I_{OH} = −0.67 mA)	3.0 – 5.5 V	2.4			V
C_{IN}	Input Capacitance of: Analog Input RXA Digital Input			 2.9 25 3.5		 pF pF pF
I_{IL}/I_{IH}	Input Leakage Current				±500	nA
I_{OLL}	Output Leakage Current				±10	μA
I_{DDA}	Power Supply Current (RBIAS = 500 kΩ, AREF = 1.235 V)	3.3 V 5.0 V	150 150	330 300	450 600	μA μA
I_{DDD}	Dynamic Digital Current	5.0 V	25		200	μA
A_{REF}	Analog Reference	3.3 V 5.0 V	1.2	1.235 2.5	2.6	V V
CD_{REF} (Note 3)	Carrier Detect Reference (AREF – 0.08 V)	3.3 V 5.0 V		1.15 2.42		V
C_{BIAS}	Comparator Bias Current (RBIAS = 500 kΩ, AREF = 1.235 V)			2.5		μA

3. The HART specification requires carrier detect (CD) to be active between 80 and 120 mVp−p. Setting CDREF at AREF − 0.08 VDC will set the carrier detect to a nominal 100 mVp−p.

Table 3. AC CHARACTERISTICS (V_{DD} = 3.0 V to 5.5 V, V_{SS} = 0 V, T_A = −40°C to +85°C) (Note 4)

Pin Name	Description	Min	Typ	Max	Units
RxA	Receive analog input Leakage current Frequency – mark (logic 1) Frequency – space (logic 0)	 1190 2180	 1200 2200	 ±150 1210 2220	 nA Hz Hz
RxAF	Output of the high−pass filter Slew rate Gain bandwidth (GBW) Voltage range	 0.025 150 0.15		 V_{DD} – 0.15	 V/ms kHz V
RxAFI	Carrier detect and receive filter input Leakage current			 ±500	 nA
TxA	Modulator output Frequency – mark (logic 1) Frequency – space (logic 0) Amplitude (AREF 1.235 V) Slew Rate − mark (logic 1) Slew Rate − space (logic 0) Loading (AREF = 1.235 V)	 30	 1196.9 2194.3 500 1860 3300		 Hz Hz mV V/s V/s kΩ
RxD	Receive digital output Rise/fall time	 20			ns
CD	Carrier detect output Rise/fall time	 20			ns

4. The modular output frequencies are proportional to the input clock frequency (460.8 kHz).

Table 4. MODEM CHARACTERISTICS (V_{DD} = 3.0 V to 5.5 V, V_{SS} = 0 V, T_A = −40°C to +85°C)

Parameter	Min	Typ	Max	Units
Demodulator jitter Conditions 1. Input frequencies at 1200 Hz ± 10 Hz, 2200 Hz ± 20 Hz 2. Clock frequency of 460.8 kHz ± 0.1% 3. Input (RxA) asymmetry, 0			12	% of 1 bit

Table 5. CERAMIC RESONATOR − External Clock Specifications (V_{DD} = 3.0 V to 5.5 V, V_{SS} = 0 V, T_A = −40°C to +85°C)

Parameter	Min	Typ	Max	Units
Resonator Tolerance Frequency		 460.8	 1.0 	 % kHz
External Clock frequency Duty cycle Amplitude	 456.2 40 	 460.8 50 $V_{OH} - V_{OL}$	 465.4 60 	 kHz % V

TYPICAL APPLICATION

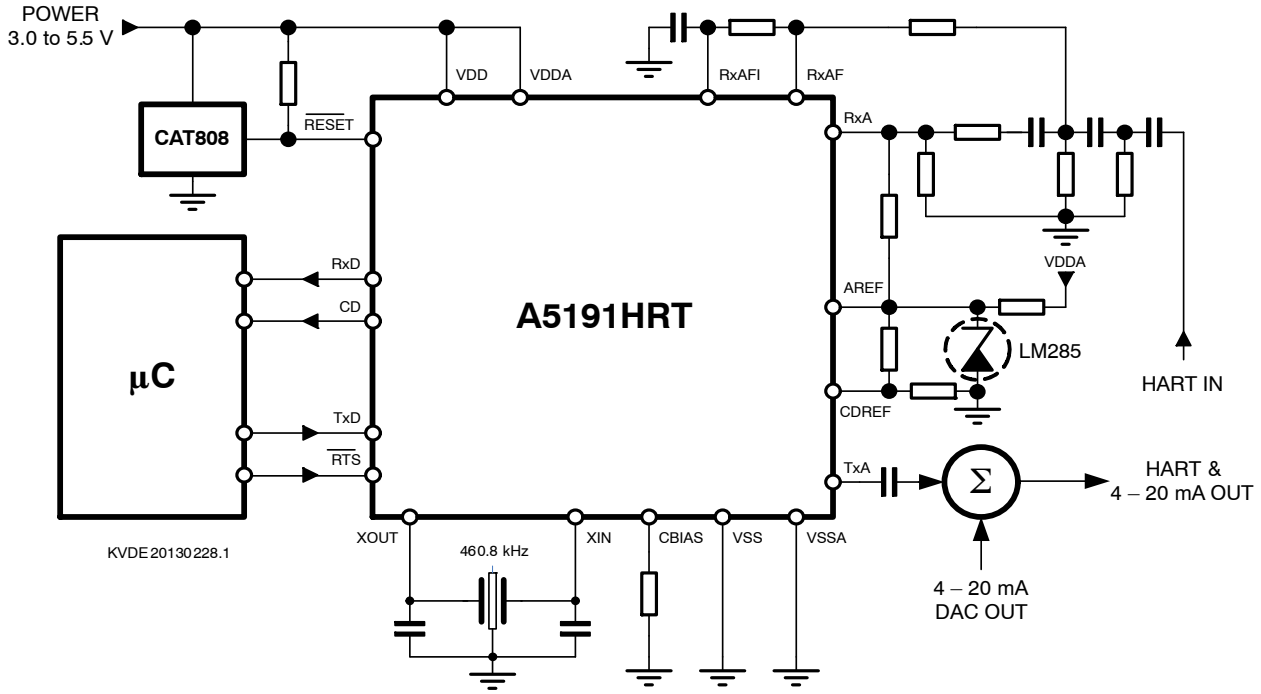

Figure 2. Application Diagram A5191HRT

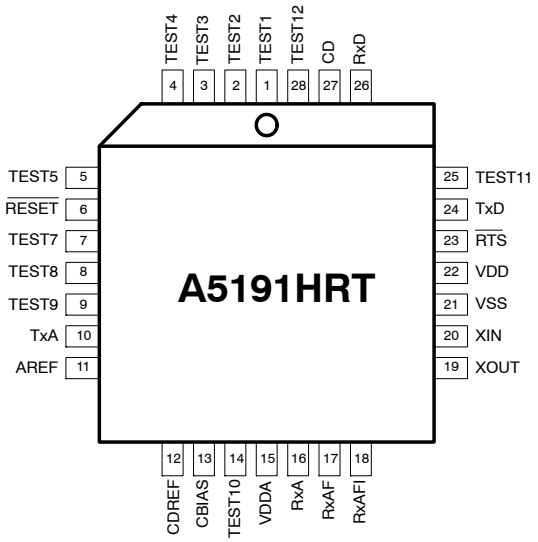

Figure 3. Pin Out A5191HRT in 28-pin PLCC

Table 6. PIN OUT SUMMARY 28−PIN PLCC

Pin No.	Signal Name	Type	Pin Description
1	TEST1	Input	Connect to VSS
2, 3, 4	TEST2, 3, 4	–	Do Not Connect
5	TEST5	Input	Connect to VSS
6	RESETB	Input	Reset all digital logic when low
7, 8, 9	TEST7, 8, 9	Input	Connect to VSS
10	TxA	Output	Transmit Data Modulator output
11	AREF	Input	Analog reference voltage
12	CDREF	Input	Carrier detect reference voltage
13	CBIAS	Output	Comparator bias current
14	TEST10	Input	Connect to VSS
15	VDDA	Power	Analog supply voltage
16	RxA	Input	Receive Data Modulator input
17	RxAF	Output	Analog receive filter output
18	RxAFI	Input	Analog receive comparator input
19	XOUT	Output	Crystal oscillator output
20	XIN	Input	Crystal oscillator input
21	VSS	Ground	Ground
22	VDD	Power	Digital supply voltage
23	RTSB	Input	Request to send
24	TxD	Input	Input transmit date, transmitted HART data stream from microcontroller
25	TEST11	–	Do Not Connect
26	RxD	Output	Received demodulated HART data to microcontroller
27	CD	Output	Carrier detect output
28	TEST12	–	Do Not Connect

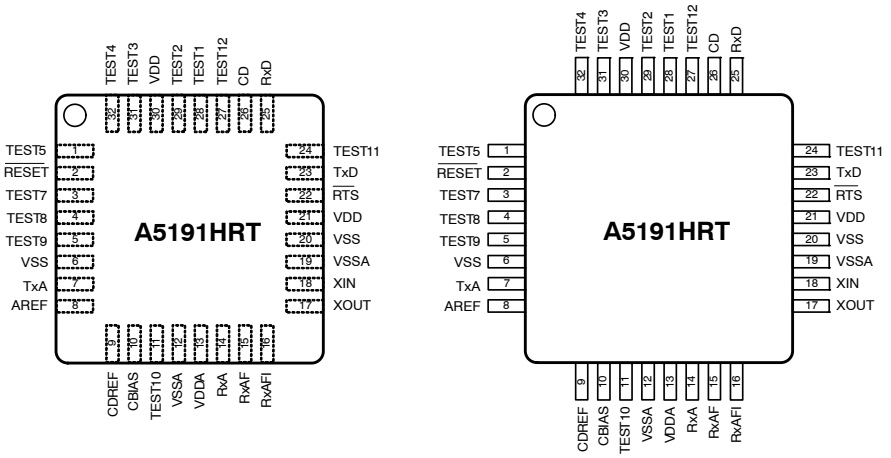

Figure 4. Pin Out A5191HRT in 32-pin QFN and LQFP (top view)

Table 7. PIN OUT SUMMARY 32−PIN QFN AND LQFP

Pin No.	Signal Name	Type	Pin Description
1	TEST5	Input	Connect to VSS
2	RESETB	Input	Reset all logic when low, connect to VDD for normal operation
3, 4, 5	TEST7, 8, 9	Input	Connect to VSS
6	VSS	Ground	Digital ground
7	TxA	Output	Transmit Data Modulator output
8	AREF	Input	Analog reference voltage
9	CDREF	Input	Carrier detect reference voltage
10	CBIAS	Output	Comparator bias current
11	TEST10	Input	Connect to VSS
12	VSSA	Ground	Analog ground
13	VDDA	Power	Analog supply voltage
14	RxA	Input	Receive Data Modulator input
15	RxAF	Output	Analog receive filter input
16	RxAFI	Input	Analog receive comparator input
17	XOUT	Output	Crystal oscillator output
18	XIN	Input	Crystal oscillator input
19	VSSA	Ground	Analog ground
20	VSS	Ground	Digital ground
21	VDD	Power	Digital supply voltage
22	RTSB	Input	Request to send
23	TxD	Input	Input transmit data, transmit HART data stream from microcontroller
24	TEST11	–	Do Not Connect
25	RxD	Output	Received demodulated HART data to microcontroller
26	CD	Output	Carrier detect output
27	TEST12	–	Do Not Connect
28	TEST1	Input	Connect to VSS
29	TEST2	–	Do Not Connect
30	VDD	Power	Digital supply voltage
31, 32	TEST3, 4	–	Do Not Connect
EP	Exposed Pad	Power	Connect to VSS (QFN only)

Pin Descriptions

Table 8. PIN DESCRIPTIONS

Symbol	Pin Name	Description
AREF	Analog reference voltage	Receiver Reference Voltage. Normally 1.23 V is selected (in combination with VDDA = 3.3 V). See Table 2.
CDREF	Carrier detect reference voltage	Carrier Detect Reference voltage. The value should be 85 mV below AREF to set the carrier detection to a nominal of 100 mV_{p-p}.
RESETB	Reset digital logic	When at logic low (V_{SS}) this input holds all the digital logic in reset. During normal operation RESETB should be at V_{DD}. RESETB should be held low for a minimum of 10 nS after V_{DD} = 2.5 V as shown in Figure 14.
RTSB	Request to send	Active−low input selects the operation of the modulator. TxA is enabled when this signal is low. This signal must be held high during power−up.
RxA	Analog receive input	Receive Data Demodulator Input. Accepts a HART 1200 / 2200 Hz FSK modulated square wave serial data stream as input.
RxAFI	Analog receive comparator input	Positive input of the carrier detect comparator and the receiver filter comparator.
TxD	Digital transmit input	Input to the modulator accepts digital data in NRZ form. When TxD is low, the modulator output frequency is 2200 Hz. When TxD is high, the modulator output frequency is 1200 Hz.
XIN	Oscillator input	Input to the internal oscillator must be connected to a parallel mode 460.8 kHz ceramic resonator when using the internal oscillator or grounded when using an external 460.8 kHz clock signal.
CBIAS	Comparator bias current	Connection to the external bias resistor. R_{BIAS} should be selected such that AREF / R_{BIAS} = 2.5 μA ± 5 %
CD	Carrier detect output	Output goes high when a valid input is recognized on RxA. If the received signal is greater than the threshold specified on CDREF for four cycles of the RxA signal, the valid input is recognized.
RxAF	Analog receive filter output	The output of the three pole high pass receive data filter
RxD	Digital receive output	Signal outputs the digital receive data. When the received signal (RxA) is 1200 Hz, RxD outputs logic high. When the received signal (RxA) is 2200 Hz, RxD outputs logic low. The HART receive data stream is only active if Carrier Detect (CD) is high.
TxA	Analog transmit output	Transmit Data Modulator Output. A trapezoidal shaped waveform with a frequency of 1200 Hz or 2200 Hz corresponding to a data value of 1 or 0 respectively applied to TxD. TxA is active when RTSB is low. TxA equals 0.5 V when RTSB is high.
XOUT	Oscillator output	Output from the internal oscillator must be connected to an external 460.8 kHz clock signal or to a parallel mode 460.8 kHz ceramic resonator when using the internal oscillator.
TEST(12:1)	Factory test	Factory test pins; for normal operation, tie these signals as per Tables 6 and 7
VDD	Digital power	Power for the digital modem circuitry
VDDA	Analog supply voltage	Power for the analog modem circuitry
VSS	Ground	Digital ground (and Analog ground in the case of PLCC package)
VSSA	Analog ground	Analog ground

Functional Description

The A5191HRT is a single-chip modem for use in Highway Addressable Remote Transducer (HART) field instruments and masters. The modem IC contains a transmit data modulator with signal shaper, carrier detect circuitry, an analog receiver, demodulator circuitry and a crystal oscillator, as shown in the block diagram in Figure 1.

The modulator accepts digital data at its digital input TxD and generates a sine shaped FSK modulated signal at the analog output TxA. A digital “1” or mark is represented with a frequency of 1200 Hz. A digital “0” or space is represented with a frequency of 2200 Hz. The used bit rate is 1200 baud.

The demodulator receives the FSK signal at its analog input, filters it with a band-pass filter and generates 2 digital signals: RxD: Received Data and CD: Carrier Detect. At the digital output RxD the original modulated signal is received. CD outputs the Carrier Detect signal. It goes logic high if the received signal is above 100 mVpp during 4 consecutive carrier periods.

The oscillator provides the modem with a stable time base using either a simple external resonator or an external clock source.

Detailed Description

Modulator

The modulator accepts digital data in NRZ form at the TxD input and generates the FSK modulated signal at the TxA output.

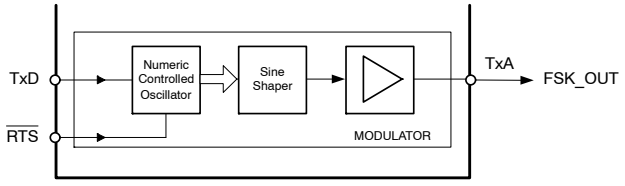

Figure 5. Modulator Block Diagram

A logic “1” or mark is represented by a frequency fm = 1200 Hz. A logic “0”or space is represented by a frequency fs = 2200 Hz.

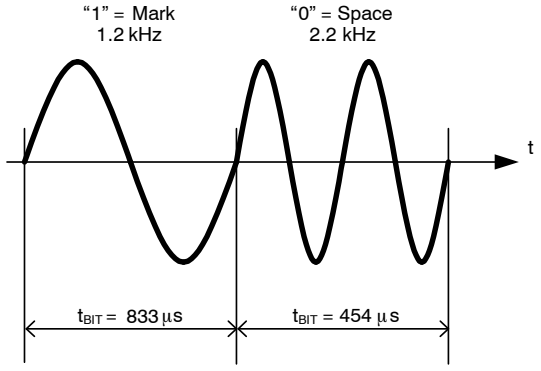

Figure 6. Modulation Timing

The Numeric Controlled Oscillator NCO works in a phase continuous mode preventing abrupt phase shifts when switching between mark and space frequency. The control signal Request To Send RTSB enables the NCO. When RTSB is logic low the modulator is active and A5191HRT is in transmit mode. When RTSB is logic high the modulator is disabled and A5191HRT is in receive mode.

The digital outputs of the NCO are shaped in the Wave Shaper block to a trapezoidal signal. This circuit controls the rising and falling edge to be inside the standard HART waveshape limits. Figure 7 shows the transmit-signal forms captured at TxA for mark and space frequency. The slew rates are SR_m = 1860 V/s at the mark frequency and SR_s = 3300 V/s at the space frequency. For AREF = 1.235 V, TxA will have a voltage swing from approximately 0.25 to 0.75 V_{DC}.

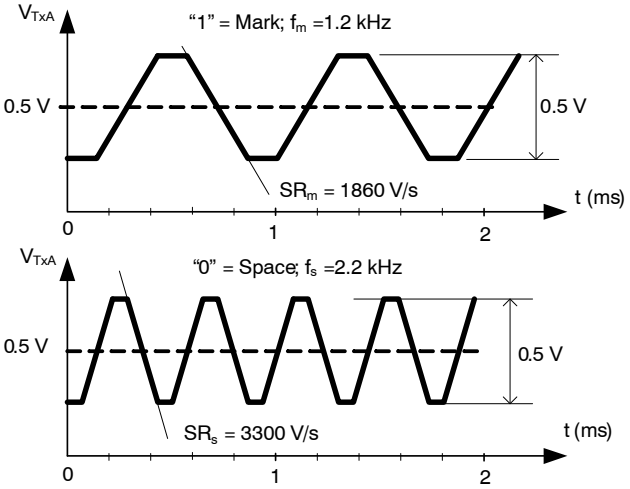

Figure 7. Modulator shaped output signal for Mark and Space frequency at TxA pin.

Demodulator

The demodulator accepts a FSK signal at the RxA input and reconstructs the original modulated signal at the RxD output. Figure 8 illustrates the demodulation process.

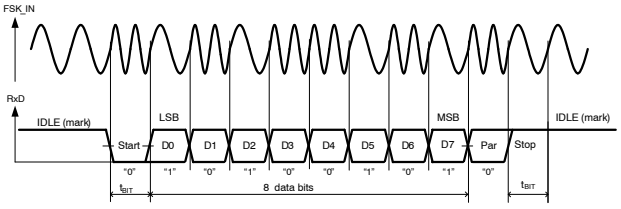

Figure 8. Modulation Timing

This HART bit stream follows a standard 11-bit UART frame with 1 startbit, 8 databits, 1 paritybit (odd) and 1 stopbit. The communication speed is 1200 baud.

Receive Filter and Comparator

The received FSK signal first is filtered using a band-pass filter build around the low noise receiver operational amplifier “Rx HP filter”. This filter blocks interferences outside the HART signal band.

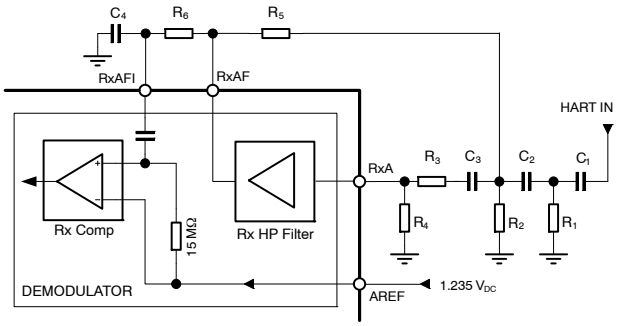

Figure 9. Demodulator Receive Filter and Signal Comparator

The filter output is fed into the Rx comparator. The threshold value equals the analog ground making the comparator to toggle on every zero crossing of the filtered FSK signal. The maximum demodulator jitter is 12 % of one bit given the input frequencies are within the HART specifications, a clock frequency of 460.8 kHz (±1.0 %) and zero input (RxA) asymmetry.

Carrier Detect Circuitry

Low HART input signal levels increases the risk for the generation of bit errors. Therefore the minimum signal amplitude is set to 80 – 120 mVpp. If the received signal is below this level the demodulator is disabled.

This level detection is done in the Carrier Detector. The output of the demodulator is qualified with the carrier detect signal (CD), therefore, only RxA signals large enough to be detected (100 mVp-p typically) by the carrier detect circuit produce received serial data at RxD.

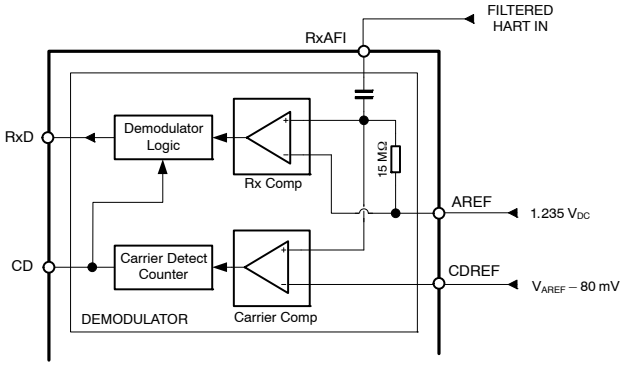

Figure 10. Demodulator Carrier and Signal Comparator

The carrier detect comparator shown in Figure 10 generates logic low output if the RxAFI voltage is below CDREF. The comparator output is fed into a carrier detect block. The carrier detect block drives the carrier detect output pin CD high if RTSB is high and four consecutive pulses out of the comparator have arrived. CD stays high as long as RTSB is high and the next comparator pulse is received in less than 2.5 ms. Once CD goes inactive, it takes four consecutive pulses out of the comparator to assert CD again. Four consecutive pulses amount to 3.33 ms when the received signal is 1200 Hz and to 1.82 ms when the received signal is 2200 HZ.

Miscellaneous Analog Circuitry

Voltage References

The A5191HRT requires two voltage references, AREF and CDREF. AREF sets the DC operating point of the internal operational amplifiers and is the reference for the Rx comparator. If A5191HRT operates at V_{DD} = 3.3 V the ON Semiconductor LM285D 1.235 V reference is recommended.

The level at which CD (Carrier Detect) becomes active is determined by the DC voltage difference (CDREF - AREF). Selecting a voltage difference of 80 mV will set the carrier detect to a nominal 100 mV_{p-p}.

Bias Current Resistor

The A5191HRT requires a bias current resistor R_{BIAS} to be connected between CBIAS and V_{SS}. The bias current controls the operating parameters of the internal operational amplifiers and comparators and should be set to 2.5 μA.

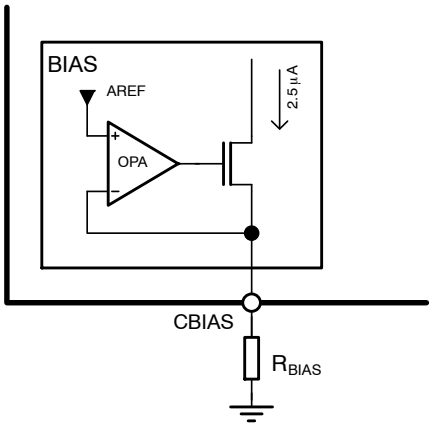

Figure 11. Bias Circuit

The value of the bias current resistor is determined by the reference voltage AREF and the following formula:

$$R_{BIAS} = \frac{AREF}{2.5\ \mu A}$$

The recommended bias current resistor is 500 KΩ when AREF is equal to 1.235 V.

Oscillator

The A5191HRT requires a 460.8 kHz clock signal. This can be provided by an external clock or a resonator connected to the A5191HRT internal oscillator.

Internal Oscillator Option

The oscillator cell will function with either a 460.8 kHz crystal or ceramic resonator. A parallel resonant ceramic resonator can be connected between XIN and XOUT. Figure 12 illustrates the crystal option for clock generation using a 460.8 kHz (±1 % tolerance) parallel resonant crystal and two tuning capacitors Cx. The actual values of the capacitors may depend on the recommendations of the manufacturer of the resonator. Typically, capacitors in the range of 100 pF to 470 pF are used.

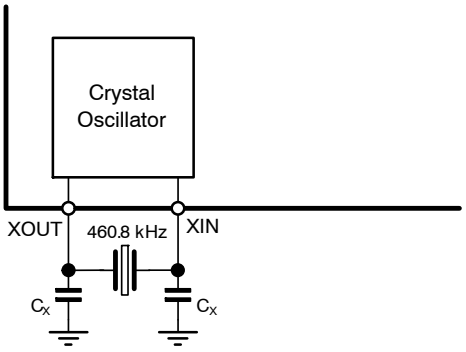

Figure 12. Crystal Oscillator

External Clock Option

It may be desirable to use an external 460.8 kHz clock as shown in Figure 13 rather than the internal oscillator. In addition, the A5191HRT consumes less current when an external clock is used. Minimum current consumption occurs with the clock connected to XOUT and XIN connected to V_{SS}.

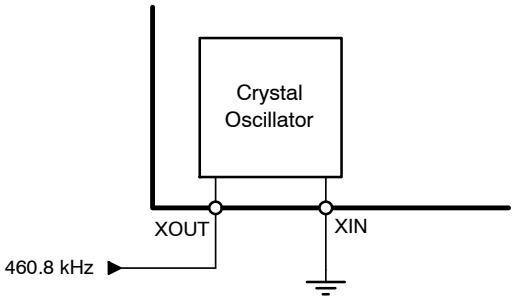

Figure 13. Oscillator with External Clock

Power On Reset

During start-up the RESETB pin should be kept low until the voltage level on V_{DD} is above the minimum level V_{DDH} = 2.5 V to guarantee correct operation of the digital circuitry. As illustrated in Figure 14 RESETB should be kept low for at least t_{POR} = 10 ns after this threshold level is reached.

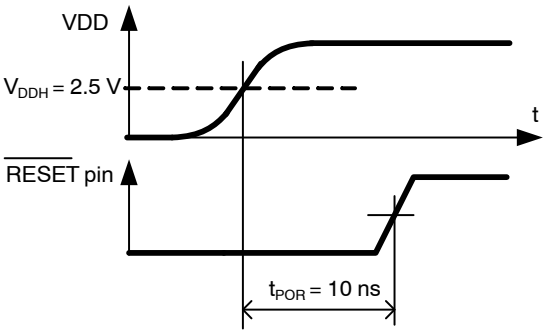

Figure 14. Power On Reset Timing

PACKAGE DIMENSIONS

PLCC 28 LEAD
CASE 776AA
ISSUE O

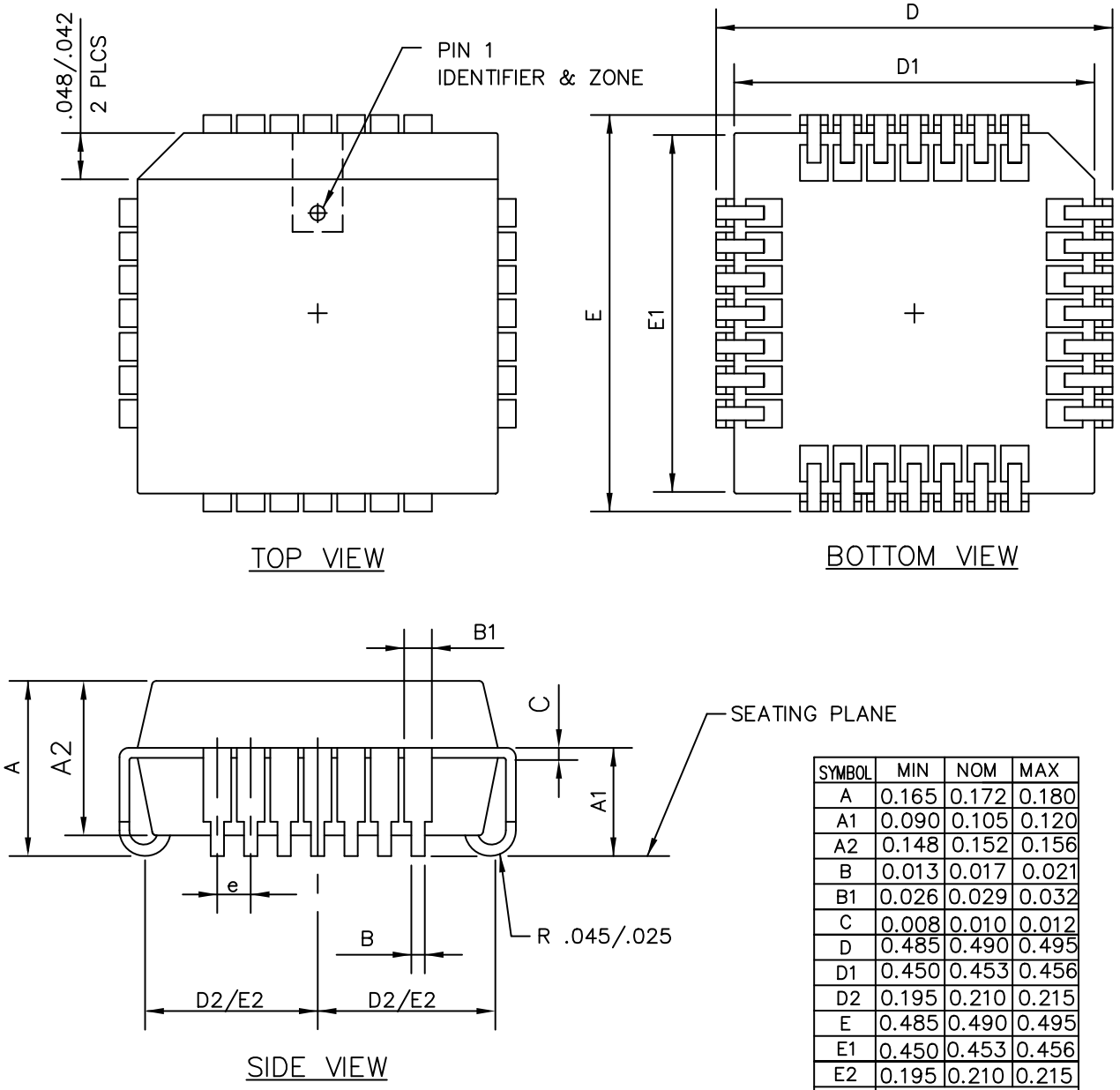

SYMBOL	MIN	NOM	MAX
A	0.165	0.172	0.180
A1	0.090	0.105	0.120
A2	0.148	0.152	0.156
B	0.013	0.017	0.021
B1	0.026	0.029	0.032
C	0.008	0.010	0.012
D	0.485	0.490	0.495
D1	0.450	0.453	0.456
D2	0.195	0.210	0.215
E	0.485	0.490	0.495
E1	0.450	0.453	0.456
E2	0.195	0.210	0.215
e	0.050 REF.		

ALL DIMENSIONS ARE IN INCHES.

PACKAGE DIMENSIONS

QFN−32, 5x5
CASE 488AM
ISSUE O

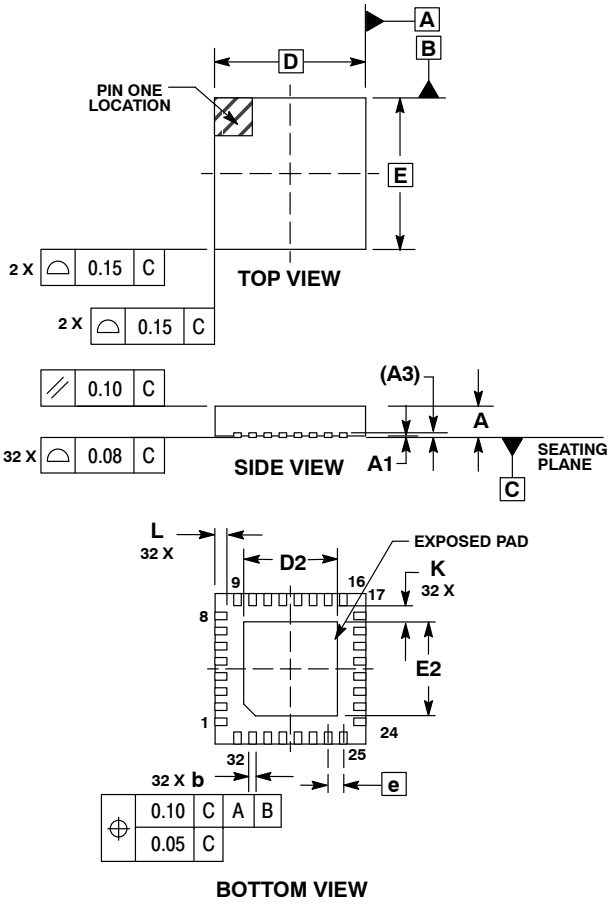

NOTES:
1. DIMENSIONS AND TOLERANCING PER ASME Y14.5M, 1994.
2. CONTROLLING DIMENSION: MILLIMETERS.
3. DIMENSION b APPLIES TO PLATED TERMINAL AND IS MEASURED BETWEEN 0.25 AND 0.30 MM TERMINAL
4. COPLANARITY APPLIES TO THE EXPOSED PAD AS WELL AS THE TERMINALS.

	MILLIMETERS		
DIM	MIN	NOM	MAX
A	0.800	0.900	1.000
A1	0.000	0.025	0.050
A3	0.200 REF		
b	0.180	0.250	0.300
D	5.00 BSC		
D2	2.950	3.100	3.250
E	5.00 BSC		
E2	2.950	3.100	3.250
e	0.500 BSC		
K	0.200	–––	–––
L	0.300	0.400	0.500

SOLDERING FOOTPRINT*

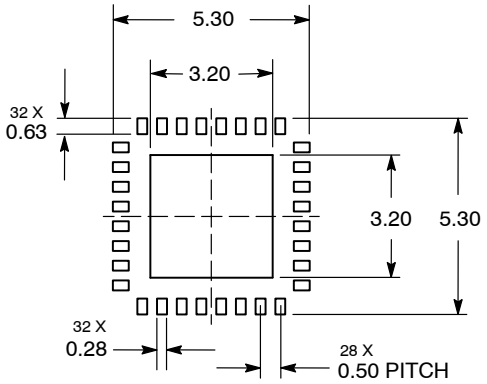

*For additional information on our Pb−Free strategy and soldering details, please download the ON Semiconductor Soldering and Mounting Techniques Reference Manual, SOLDERRM/D.

PACKAGE DIMENSIONS

LQFP−32, 7x7
CASE 561AB
ISSUE O

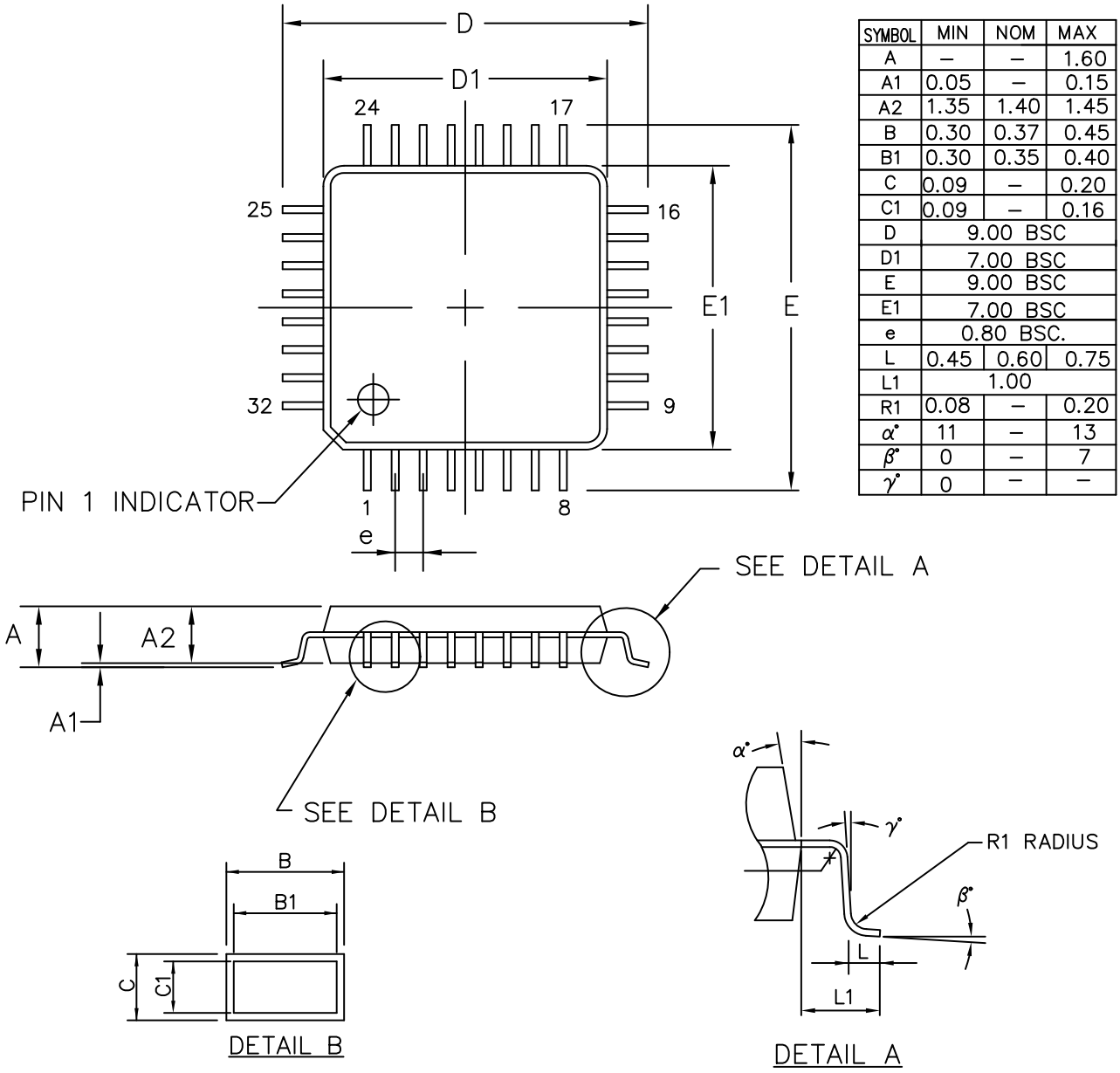

SYMBOL	MIN	NOM	MAX
A	–	–	1.60
A1	0.05	–	0.15
A2	1.35	1.40	1.45
B	0.30	0.37	0.45
B1	0.30	0.35	0.40
C	0.09	–	0.20
C1	0.09	–	0.16
D	9.00 BSC		
D1	7.00 BSC		
E	9.00 BSC		
E1	7.00 BSC		
e	0.80 BSC.		
L	0.45	0.60	0.75
L1	1.00		
R1	0.08	–	0.20
α°	11	–	13
β°	0	–	7
γ°	0	–	–

Ordering Information

The A5191HRT is available in a 28−pin plastic leaded chip carrier (PLCC), 32−pin quad flat no−lead (QFN) and 32−pin low−profile quad flat pack (LQFP). Use the following part numbers when ordering. Contact your local sales representative for more information: www.onsemi.com.

Table 9. ORDERING INFORMATION

Part Number	Package	Shipping Configuration	Temperature Range
A5191HRTLG−XTD (Industrial)	32−pin LQFP Green / RoHS compliant	250 Units / Tray	−40°C to +85°C
A5191HRTLG−XTP (Industrial)	32−pin LQFP Green / RoHS compliant	2500 Units / Tape & Reel	−40°C to +85°C
A5191HRTPG−XTD (Industrial)	28−pin PLCC Green / RoHS compliant	37 Units / Tube	−40°C to +85°C
A5191HRTPG−XTP (Industrial)	28−pin PLCC Green / RoHS compliant	750 Units / Tape & Reel	−40°C to +85°C
A5191HRTNG−XTD (Industrial)	32−pin QFN Green / RoHS compliant	60 Units / Tube/Tray	−40°C to +85°C
A5191HRTNG−XTP (Industrial)	32−pin QFN Green / RoHS compliant	5000 Units / Tape & Reel	−40°C to +85°C

ON Semiconductor and ON are registered trademarks of Semiconductor Components Industries, LLC (SCILLC). SCILLC reserves the right to make changes without further notice to any products herein. SCILLC makes no warranty, representation or guarantee regarding the suitability of its products for any particular purpose, nor does SCILLC assume any liability arising out of the application or use of any product or circuit, and specifically disclaims any and all liability, including without limitation special, consequential or incidental damages. “Typical” parameters which may be provided in SCILLC data sheets and/or specifications can and do vary in different applications and actual performance may vary over time. All operating parameters, including “Typicals” must be validated for each customer application by customer’s technical experts. SCILLC does not convey any license under its patent rights nor the rights of others. SCILLC products are not designed, intended, or authorized for use as components in systems intended for surgical implant into the body, or other applications intended to support or sustain life, or for any other application in which the failure of the SCILLC product could create a situation where personal injury or death may occur. Should Buyer purchase or use SCILLC products for any such unintended or unauthorized application, Buyer shall indemnify and hold SCILLC and its officers, employees, subsidiaries, affiliates, and distributors harmless against all claims, costs, damages, and expenses, and reasonable attorney fees arising out of, directly or indirectly, any claim of personal injury or death associated with such unintended or unauthorized use, even if such claim alleges that SCILLC was negligent regarding the design or manufacture of the part. SCILLC is an Equal Opportunity/Affirmative Action Employer. This literature is subject to all applicable copyright laws and is not for resale in any manner.

PUBLICATION ORDERING INFORMATION

LITERATURE FULFILLMENT:
Literature Distribution Center for ON Semiconductor
P.O. Box 5163, Denver, Colorado 80217 USA
Phone: 303−675−2175 or 800−344−3860 Toll Free USA/Canada
Fax: 303−675−2176 or 800−344−3867 Toll Free USA/Canada
Email: orderlit@onsemi.com

N. American Technical Support: 800−282−9855 Toll Free USA/Canada
Europe, Middle East and Africa Technical Support:
Phone: 421 33 790 2910
Japan Customer Focus Center
Phone: 81−3−5817−1050

ON Semiconductor Website: **www.onsemi.com**

Order Literature: http://www.onsemi.com/orderlit

For additional information, please contact your local Sales Representative

OCEAN CHIPS
Океан Электроники
Поставка электронных компонентов

Компания «Океан Электроники» предлагает заключение долгосрочных отношений при поставках импортных электронных компонентов на взаимовыгодных условиях!

Наши преимущества:

- Поставка оригинальных импортных электронных компонентов напрямую с производств Америки, Европы и Азии, а так же с крупнейших складов мира;
- Широкая линейка поставок активных и пассивных импортных электронных компонентов (более 30 млн. наименований);
- Поставка сложных, дефицитных, либо снятых с производства позиций;
- Оперативные сроки поставки под заказ (от 5 рабочих дней);
- Экспресс доставка в любую точку России;
- Помощь Конструкторского Отдела и консультации квалифицированных инженеров;
- Техническая поддержка проекта, помощь в подборе аналогов, поставка прототипов;
- Поставка электронных компонентов под контролем ВП;
- Система менеджмента качества сертифицирована по Международному стандарту ISO 9001;
- При необходимости вся продукция военного и аэрокосмического назначения проходит испытания и сертификацию в лаборатории (по согласованию с заказчиком);
- Поставка специализированных компонентов военного и аэрокосмического уровня качества (Xilinx, Altera, Analog Devices, Intersil, Interpoint, Microsemi, Actel, Aeroflex, Peregrine, VPT, Syfer, Eurofarad, Texas Instruments, MS Kennedy, Miteq, Cobham, E2V, MA-COM, Hittite, Mini-Circuits, General Dynamics и др.);

Компания «Океан Электроники» является официальным дистрибьютором и эксклюзивным представителем в России одного из крупнейших производителей разъемов военного и аэрокосмического назначения **«JONHON»**, а так же официальным дистрибьютором и эксклюзивным представителем в России производителя высокотехнологичных и надежных решений для передачи СВЧ сигналов **«FORSTAR»**.

AVIC JONHON

«JONHON» (основан в 1970 г.)

Разъемы специального, военного и аэрокосмического назначения:

(Применяются в военной, авиационной, аэрокосмической, морской, железнодорожной, горно- и нефтедобывающей отраслях промышленности)

«FORSTAR» (основан в 1998 г.)

ВЧ соединители, коаксиальные кабели, кабельные сборки и микроволновые компоненты:

(Применяются в телекоммуникациях гражданского и специального назначения, в средствах связи, РЛС, а так же военной, авиационной и аэрокосмической отраслях промышленности).

FORSTAR®

Телефон: 8 (812) 309-75-97 (многоканальный)
Факс: 8 (812) 320-03-32
Электронная почта: ocean@oceanchips.ru
Web: http://oceanchips.ru/
Адрес: 198099, г. Санкт-Петербург, ул. Калинина, д. 2, корп. 4, лит. А