RF Manual 16th edition

Application and design manual

for High Performance RF products

June 2012

NXP enables you to unleash the performance of next-generation RF and microwave designs

NXP's RF Manual is one of the most important reference tools on the market for today's RF designers. It features our complete range of RF products, from low- to high-power signal conditioning, organized by application and function, and with a focus on design-in support.

When it comes to RF, the first thing on the designer's mind is to meet the specified performance. NXP brings clarity to every aspect of your design challenge, so you can unleash the performance of your RF and microwave designs. NXP delivers a portfolio of high-performance RF technology that allows you to differentiate your product – no matter where in the RF world you are. That's why customers trust us with their mission-critical designs. Whether it's LDMOS and GaN for high-power RF applications or Si and SiGe:C BiCMOS for your small-signal needs, we've got you covered. Our broad portfolio of far-reaching technologies gives you the freedom to design with confidence.

Shipping more than four billion RF products annually, NXP is a clear industry leader in High Performance RF. From satellite receivers, cellular base stations, and broadcast transmitters to ISM (industrial, scientific, medical) and aerospace and defense applications, you will find the High Performance RF products that will help you realize a clear advantage in your products, your reputation, and your business.

So if you're looking to improve your RF performance, design a highly efficient signal chain, or break new ground with an innovative ISM application, NXP will help you unleash the performance of your next-generation RF and microwave designs.

UNLEASH RF

What's new?

This RF Manual provides updated information on RF applications that are grouped as follows: wireless and broadband communication infrastructure, TV and satellite, portable devices, automotive, ISM, and aerospace and defense.

We describe in detail the new developments in our core technologies, QUBiC4 (SiGe:C) and LDMOS. We have also added GaN technology to our product offering; this key technology lets high-power amplifiers deliver very high efficiency in next-generation wireless communication systems.

New products include GaN power amplifiers, a complete line of overmolded plastic (OMP) RF power transistors and MMICs, and our eighth generation LDMOS transistors (Gen8). Next-generation devices and improved products include GPS LNAs, medium power amplifiers, IF gain blocks, satellite LNB ICs and CATV modules.

Our portfolio for the wireless communication infrastructure has expanded, with a comprehensive set of amplifiers (low noise, variable gain, medium power, and high power Doherty amplifiers), mixers, IQ modulators and synthesizers, so you can build a highly efficient signal chain for transmit line-ups and receive chains.

The Design Support section is updated and includes all available tools, documents, materials and links that ease the design-in of our products.

We're relentless in our commitment to RF innovation, and have the infrastructure and insight to inspire confidence in your performance-critical applications. We bring focus to complex RF problems so you are free to push the performance limits of your application, realize your design vision, and gain a competitive edge for your enterprise. What you are reading is more than a guide, it's a tool that lets you unleash your RF performance: the 16th edition of the RF Manual.

Kind regards,

John Croteau

Sr. Vice President & General Manager
Business Line High Performance RF

RF Manual web page
www.nxp.com/rfmanual

Contents

1 Products by application 9

1.1 Wireless communication infrastructure 9
1.1.1 Base stations (all cellular standards and frequencies) 9
1.1.2 Point-to-point communications 12
1.1.3 Repeater 14
1.2 Broadband communication infrastructure 15
1.2.1 CATV optical (optical node with multiple out-ports) 15
1.2.2 CATV electrical (line extenders) 16
1.3 TV and satellite 17
1.3.1 Network interface module (NIM) for TV reception 17
1.3.2 Basic TV tuner 19
1.3.3 Satellite outdoor unit, twin low-noise block (LNB) with discrete components 20
1.3.4 Satellite outdoor unit, twin low-noise block (LNB) with integrated mixer / oscillator / downconverter 21
1.3.5 Satellite multi-switch box - 4 x 4 (up to 16 x 16) / DiSEqC / SMATV 22
1.3.6 VSAT 23
1.4 Portable devices 25
1.4.1 GPS 25
1.4.2 FM radio 26
1.4.3 China Mobile Multimedia Broadcasting (CMMB) in UHF band 470 – 862 MHz 27
1.4.4 Cellular receiver 28
1.4.5 802.11n DBDC and 802.11ac WLAN 29
1.4.6 Generic RF front-end 30
1.5 Automotive 31
1.5.1 SDARS & HD radio 31
1.5.2 Remote keyless entry, RF generic front-end with dedicated antenna for reception and transmission 32
1.5.3 Tire pressure monitoring system 33
1.5.4 Car radio receiver (CREST ICs: TEF6860HL, TEF6862HL) 34
1.6 Industrial, scientific & medical (ISM) 35
1.6.1 Broadcast / ISM 35
1.6.2 E-metering, RF generic front-end with a single antenna / ZigBee 36
1.6.3 RF microwave furnace application 37
1.6.4 RF plasma lighting 38
1.6.5 Medical imaging 39
1.7 Aerospace and defense 40
1.7.1 Microwave products for L- and S-band radar and avionics applications 40

2 Focus applications, products & technologies 42

2.1 Wireless communication infrastructure 42
2.1.1 Build a highly efficient signal chain with RF components for transmit line-ups and receive chains 42
2.1.2 Digital wideband VGAs with high linearity & flexible current settings 44
2.1.3 Doherty amplifier technology for state-of-the-art wireless infrastructure 46
2.1.4 The new generation of LDMOS RF power for wireless infrastructures: NXP's Gen8 48
2.2 Broadband communication infrastructure 49
2.2.1 Connecting people, protecting your network: NXP's CATV C-family for the Chinese SARFT standard 49
2.2.2 Highly efficient line-up of 1 GHz GaAs modules for sustainable CATV networks 52
2.3 TV and satellite 54
2.3.1 LNAs with programmable gain & bypass option for improved tuner performance 54
2.3.2 Complete satellite portfolio for all LNB architectures 56
2.3.3 VSAT, 2-way communication via satellite 58
2.3.4 Low noise LO generators for microwave & mmWave radios 60
2.4 Portable devices 61
2.4.1 The best reception of GNSS signals with the smallest footprint 61
2.5 Industrial, scientific & medical 63
2.5.1 Medical applications driven by RF power 63
2.5.2 RF-driven plasma lighting 64
2.5.3 QUBiC4 Si and SiGe:C transistors for any RF function 65
2.5.4 Building on decades of innovation in microwave and radar 66
2.5.5 Digital broadcasting at its best 68
2.5.6 Setting the benchmark for ultra low-power and high-performance wireless connectivity solutions 69
2.6 Technology 70
2.6.1 The first mainstream semiconductor company to offer GaN products 70

2.6.2 Completing NXP's RF power transistor offering: products in plastic packages (OMP) 71
2.6.3 Looking for a leader in SiGe:C? You just found us! 72
2.6.4 High-performance, small-size packaging enabled by NXP's leadless package platform and WL-CSP technology 74

3 Products by function 75

3.1 New products 75
3.2 RF diodes 78
3.2.1 Varicap diodes 78
3.2.2 PIN diodes 79
3.2.3 Band-switch diodes 81
3.2.4 Schottky diodes 81
3.3 RF Bipolar transistors 82
3.3.1 Wideband transistors 82
3.4 RF ICs 85
3.4.1 RF MMIC amplifiers and mixers 85
3.4.2 Wireless infrastructures ICs 88
3.4.3 Satellite LNB RF ICs 89
3.4.4 Low-noise LO generators for VSAT and general microwave applications 89
3.5 RF MOS transistors 90
3.5.1 JFETs 90
3.5.2 MOSFETs 91
3.6 RF Modules 93
3.6.1 CATV push-pulls 93
3.6.2 CATV push-pulls 1 GHz 93
3.6.3 CATV power doublers 94
3.6.4 CATV optical receivers 94
3.6.5 CATV reverse hybrids 94
3.7 RF power transistors 95
3.7.1 RF power transistors for base stations 95
3.7.2 RF power transistors for broadcast / ISM applications 99
3.7.3 RF power transistors for aerospace and defense 100
3.7.4 Gallium Nitride (GaN) RF power amplifiers 101
3.8 Wireless microcontroller chipsets and modules 101

4 Design support 102

4.1 Knowing NXP's RF portfolio 102
4.2 Product selection on NXP.com 102
4.3 Product evaluation 102
4.4 Additional design-in support 103
4.5 Application notes 103
4.6 Simulation models 104
4.6.1 Simulation models for RF power devices 104
4.6.2 Simulation models for RF bipolar wideband transistors 105
4.6.3 Simulation models for RF MOSFET transistors 106
4.6.4 Simulation models for RF varicap diodes 106
4.6.5 Simulation models for RF MMIC amplifiers 107

5 Cross-references & replacements 108

5.1 Cross-references: manufacturer types versus NXP types 108
5.2 Cross-references: NXP discontinued types versus NXP replacement types 117

6 Packing quantities per package with relevant ordering code 119

6.1 Packing quantities per package with relevant ordering code 119
6.2 Marking codes 122

7 Abbreviations 124

8 Contacts and web links 125

9 Product index 126

1. Products by application

1.1 Wireless communication infrastructure

1.1.1 Base stations (all cellular standards and frequencies)

See also brochure: 'Your partner in Mobile Communication Infrastructure design', NXP document number 9397 750 16837.

Application diagram

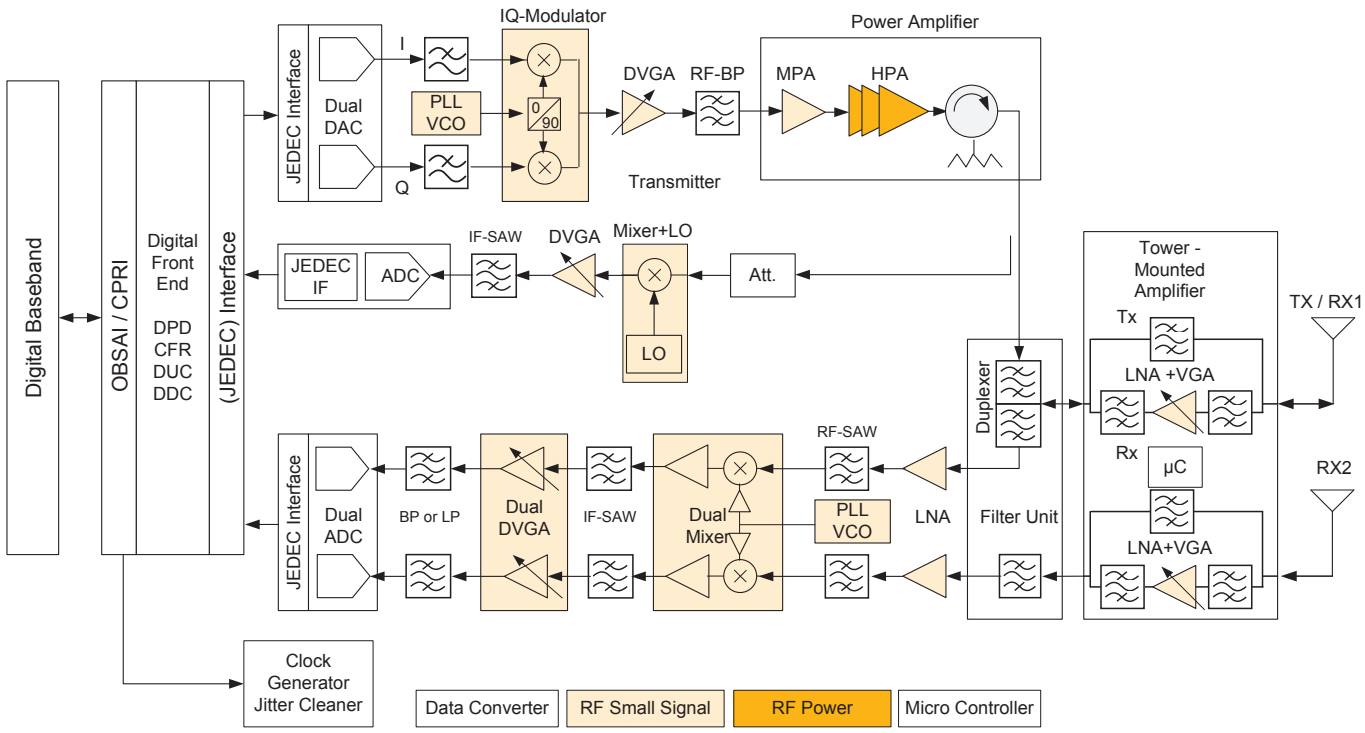

The block diagram above shows transmit (upper part, Tx) and receive (lower part, Rx) functions of a base station, and includes the Tx feedback function (middle part, Tx feedback).

The signals generated in the "Digital Baseband & Control" block follow the requirements of the air-interface standard. These signals are interfaced to the DAC via serial interface SER. The SER can use the LVDS or JEDEC standard. After the signals are fed to the I-DAC and Q-DAC, they are converted to the analog domain. Before the I and Q signals enter the IQ modulator, they are first low-pass filtered to remove any aliasing signals. At the IQ modulator, the signals are up-converted to RF using an LO signal coming from the PLL/VCO device, typically called the LO generator. Due to device aging and variation in cell load, the up-converted signals are fed to the VGA to control the power level. An additional band-pass filter is needed to remove the out-of-band spurs. The clean signal is fed to the RF power board, where the desired transmit power is made. Finally, the RF power signal is fed to the antenna via a duplexer.

Directly after the final-stage amplifier, a signal coupler picks up a certain amount of the RF signal, which is attenuated and then down-mixed using the IF mixer. This signal is called the observation signal, and is used to derive coefficients for the digital pre-distortion algorithm. Since power levels vary, the observation is first fed to the VGA to control the power level, and after band-pass filtering, the signal is converted to the digital domain using an ADC. The same serial interface is used to send the digital signals to the baseband processor.

At the receiver, the received signal directly after the duplexer is fed to the LNA for direct amplification, since the received signal level is quite low. If the first LNA is mounted in the tower top, a long RF cable is used to interface the RF signals with a base transceiver station (BTS). A second LNA is used to amplify the received signals. Band-pass filtering is applied to reduce the out-of-band signals levels before these signals are applied to the IF mixer. Signal levels that change dramatically require a VGA to maintain the full scale ranges of the I-ADC and Q-ADC for optimal conversion performance. Low-pass filtering is used before the ADC to remove the aliasing signals. These digital signals are interfaced to the baseband using a serial interface such as JEDEC.

The sample clocks and LO signals are derived from clock cleaners and PLLs respectively. This is denoted as Clock and PLL / VCO in the block diagram. This set-up is required to make a synchronized system. Typically denoted in SNRs, and in order to improve reception quality, the receive function is equipped with a second receiver, called a diversity receiver.

Recommended products

Function	Product	f_{min} (MHz)	f_{max} (MHz)	P1dB (W)	Matching	Package	Type
HPA	Driver	700	2200	10	-	SOT1179	BLP7G22-10*
	Driver/final	2110	2170	40	I/O	SOT1121	BLF6G22L(S)-40P
		2500	2700	40	I/O	SOT1121	BLF6G27L(S)-40P
	MMIC	2000	2200	60	I/O	SOT1212	BLM7G22S-60PB(G)*
	Final	700	1000	160	-	SOT467	BLF6H10L(S)-160
		700	1000	200	I/O	SOT1244C	BLF8G10LS-200GV
		700	1000	270	I/O	SOT1244C	BLF8G10LS-270GV
		850	960	300	I/O	SOT539	BLF8G10L(S)-300P*
		900	1000	140	O	SOT1224	BLP7G09S-140P(G)*
		920	960	160	I/O	SOT502	BLF8G10L(S)-160*
		920	960	250	I/O	SOT502	BLF7G10L(S)-250
		1800	1900	260	I/O	SOT539B	BLF7G20LS-260A*
		1805	1880	250	I/O	SOT539	BLF7G20L(S)-250P
		2000	2200	160	I/O	SOT502B	BLF7G22L(S)-160*
		2000	2200	200	I/O	SOT1244C	BLF8G22LS-200GV*
		2000	2200	270	I/O	SOT1244C	BLF8G22LS-270GV*
		2500	2700	100	I/O	SOT502	BLF7G27L(S)-100
		2500	2700	140	I/O	SOT502	BLF7G27L(S)-140
		3400	3600	100	I/O	SOT502	BLF6G38(LS)-100
	Integrated Doherty	2010	2025	50	O	SOT1130	BLD6G21L(S)-50

* Check status in section 3.1, as this type is not yet released for mass production

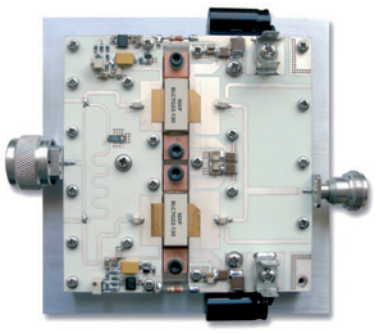

Product highlight:
BLF8G10LS-160

160 W LDMOS power transistor for base W-CDMA base station and multi-carrier applications at frequencies from 920 to 960 MHz.

Features

- Excellent ruggedness
- High efficiency
- Low R_{th} providing excellent thermal stability
- Designed for broadband operation (920 to 960 MHz)
- Lower output capacitance for improved performance in Doherty applications
- Low memory effects for excellent pre-distortability
- Internally matched for ease of use
- Integrated ESD protection
- Compliant to Restriction of Hazardous Substances (RoHS) Directive 2002/95/EC

Function	Product		Package	Type
Discrete attenuator	RF diode	PIN diode	SOT753	BAP64Q
			SOT753	BAP70Q
			Various	BAP64^

Function	Product		Package	Type
LNA (low noise amplifier)	RF transistor	SiGe:C transistor	SOT343F	BFU725F/N1
				BFU690F
				BFU730F
				BFU760F
				BFU790F
	MMIC	SiGe:C MMIC	SOT650	BGU7051
				BGU7052
				BGU7053
			SOT1301	BGU7060
				BGU7061
				BGU7062
				BGU7063

Function	Product	Gain range	Package	Type
Single VGA (variable-gain amplifier)	MMIC	31 dB	SOT617	BGA7210
				BGA7204

Function	Product	Gain range	Package	Type
Dual VGA (variable-gain amplifier)	MMIC	24 dB	SOT617	BGA7350
		28 dB		BGA7351

Function	Product	P_L (1dB) @ 940 MHz	Package	Type
MPA (medium power amplifier)	MMIC	24 dBm	SOT89	BGA7024
		28 dBm		BGA7027
		25 dBm	SOT908	BGA7124
		28 dBm		BGA7127
		30 dBm		BGA7130

Function	Product	Frequency	Package	Type
Dual mixer	MMIC	0.7 - 1.2 GHz	SOT1092	BGX7220
		1.7 -2.7 GHz		BGX7221

Function	Product	Noise	Package	Type
PLL + VCO (LO generator)	MMIC	131 dBc/Hz @ 1 MHz offset @ 5.3 GHz	SOT617	BGX7300*

Function	Product	Output power	Package	Type
IQ modulator	MMIC	0 dBm	SOT616	BGX7100
		4 dBm		BGX7101

* Check status in section 3.1, as this type is not yet released for mass production for mass production
^ SOD523, SOD323, SOT23 & SOT323

Product highlight:
Digital VGAs BGA7204 & BGA7210

These 6-bit digital VGAs offer high linearity (35 dBm @ 2.2-2.8 GHz) and high output power (23 dBm @ 2.2-2.8 GHz) across a large bandwidth without external matching. Smart routing with no connection crosses simplifies design and decreases footprint by 25%. The unique power-save mode can effectively reduce the current consumption in TDD systems up to 45%. The BGA7210 adds flexible current distribution across its two amplifiers, depending on the attenuation state, to save current.

Features

- Internally matched for 50 Ω
  - BGA7204 = 0.4 to 2.75 GHz
  - BGA7210 = 0.7 to 3.8 GHz
- High maximum power gain
  - BGA7204 = 18.5 dB
  - BGA7210 = 30 dB
- High output third-order intercept, $IP3_O$
  - BGA7204 = 38 dB
  - BGA7210 = 39 dB
- Attenuation range of 31.5 dB, 0.5 dB step size (6 bit)
- Fast switching power-save mode (power-down pin)
- Digitally controlled current setting from 120 to 195 mA with an optimum at 185mA (BGA7210 only)
- Simple control interfaces (SPI)
- ESD protection on all pins (HBM 4 kV; CDM 2 kV)

1.1.2 Point-to-point communications

Application diagram

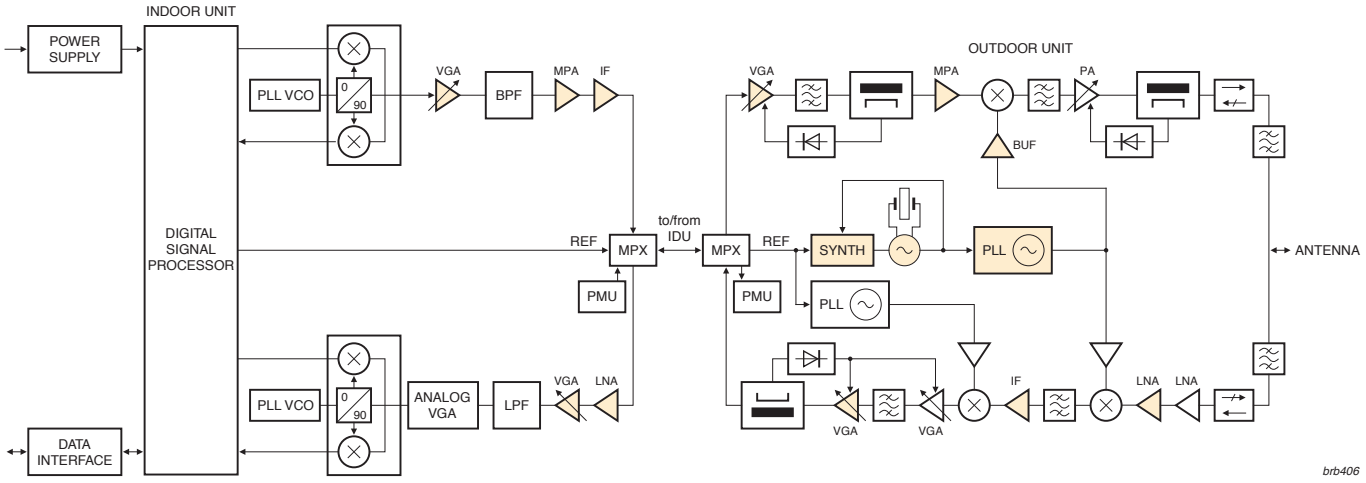

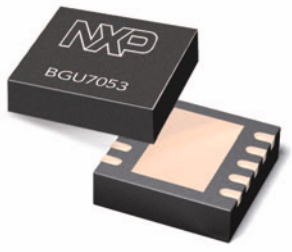

Recommended products

Indoor unit

Function	Product	Gain range	Package	Type
Single VGA (variable-gain amplifier)	MMIC	23 dB	SOT617	BGA7202
		31 dB		BGA7204

Function	Product	Gain range	Package	Type
Dual VGA (variable-gain amplifier)	MMIC	24 dB	SOT617	BGA7350
		28 dB		BGA7351

Function	Product	P_L (1dB) @ 940 MHz	Package	Type
MPA (medium power amplifier)	MMIC	24 dBm	SOT89	BGA7024
		28 dBm		BGA7027
		25 dBm	SOT908	BGA7124
		28 dBm		BGA7127
		30 dBm		BGA7130

Function	Product	Output power	Package	Type
IQ modulator	MMIC	0 dBm	SOT616	BGX7100
		4 dBm		BGX7101

Function	Product		Package	Type
IF	IF gain block	MMIC	SOT363	BGA2800
				BGA2801
				BGA2815
				BGA2816
	MMIC	General-purpose wideband amplifiers		BGM1012
				BGA2714
				BGA2748
				BGA2771

Function	Product		Package	Type
LNA	RF MMIC	SiGe:C MMIC	SOT891	BGU7003
			SOT650	BGU7051
				BGU7052
				BGU7053
			SOT1301	BGU7060
				BGU7061
				BGU7062
				BGU7063
	RF transistor	SiGe:C transistor	SOT343F	BFU725F/N1
				BFU710F
				BFU730F
		Wideband transistor	SOT343R	BFG425W
				BFG424W
			SOT143R	BFG325/XR

Outdoor unit

Function	Product	Gain range	Package	Type
Single VGA (variable-gain amplifier)	MMIC	31 dB	SOT617	BGA7210
				BGA7204

Function	Product	P_L (1dB) @ 940 MHz	Package	Type
MPA (medium power amplifier)	MMIC	24 dBm	SOT89	BGA7024
		28 dBm		BGA7027
		25 dBm	SOT908	BGA7124
		28 dBm		BGA7127
		30 dBm		BGA7130

Function	Product		Package	Type
Buffer	RF transistor	SiGe:C transistor	SOT343F	BFU725F/N1
				BFU730F
				BFU760F
				BFU790F

Function	Product		Package	Type
LNA	RF transistor	SiGe:C transistor	SOT343F	BFU725F/N1
				BFU730F
				BFU760F
				BFU790F

Function	Product		Package	Type
IF	IF gain block	MMIC	SOT363	BGA2800
				BGA2801
				BGA2815
				BGA2816
				BGA2850
				BGA2865
				BGA2866
	MMIC	General-purpose wideband amplifiers		BGM1014
				BGM1013
				BGM1012
				BGA2714

Function	Product	Gain range	Package	Type
Dual VGA (variable-gain amplifier)	MMIC	24 dB	SOT617	BGA7350
		28 dB		BGA7351

Function	Product	Noise	Package	Type
PLL + VCO (LO generator)	MMIC	-131 dBc/Hz @ 1 MHz offset @ 5.3 GHz	SOT617	BGX7300*

Function	Product		Package	Type
Oscillator	RF transistor	Wideband transistor	SOT343R	BFG424W
				BFG425W
		SiGe:C transistor	SOT343F	BFU725F/N1
				BFU730F
				BFU760F
				BFU790F

* Check status in section 3.1, as this type is not yet released for mass production

NXP BTS Tx component demonstrator board

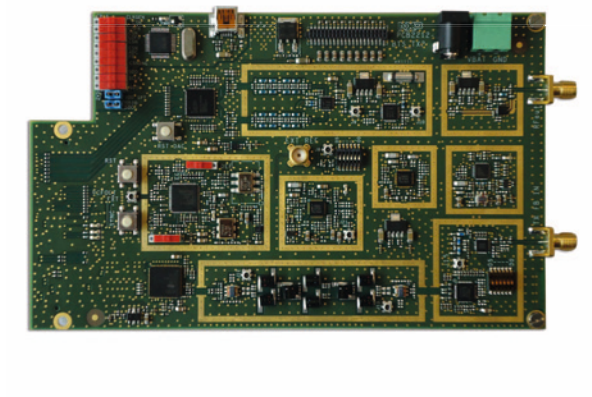

Product highlight:
BGA7350 MMIC variable-gain amplifier

The BGA7350 MMIC is a dual independent digitally controlled IF variable-gain amplifier (VGA) operating from 50 to 250 MHz. Each IF VGA amplifies with a gain range of 24 dB and, at its maximum gain setting, delivers 17 dBm output power at 1 dB gain compression with superior linear performance. The BGA7350 is optimized for a differential gain error of less than ±0.1 dB for accurate gain control and has a total integrated gain error of less than ±0.4 dB. It is housed in a 32-pin leadless HVQFN package (5 x 5 mm).

Features

- Dual independent digitally controlled 24 dB gain range VGAs, with 5-bit control interface
- 50 to 250 MHz frequency operating range
- Gain step size: 1 dB ± 0.1 dB
- 18.5 dB power gain
- Fast gain stage switching capability
- 17 dBm output power at 1 dB gain compression
- 5 V single supply operation with power-down control
- Logic-level shutdown control pin reduces supply current
- ESD protection at all pins
- Unconditionally stable

1.1.3 Repeater

Application diagram

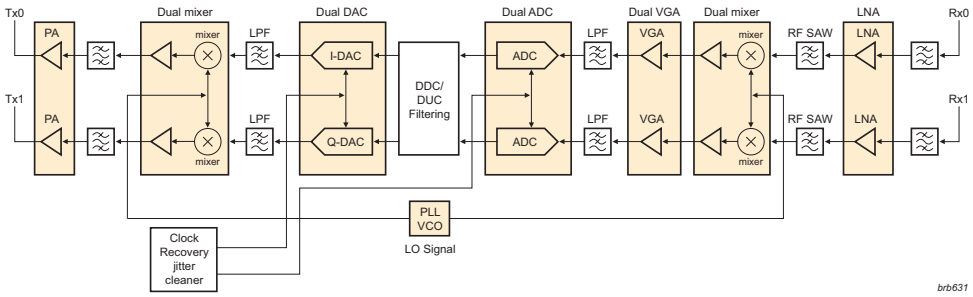

Recommended products

Function	Product	f_{min} (MHz)	f_{max} (MHz)	P1dB (W)	Matching	Package	Type
HPA	Driver	700	2200	10	-	SOT1179	BLP7G22-10*
		2300	2700	10	I	SOT975	BLF6G27-10(G)
	Driver/final	700	1000	45	I	SOT608	BLF6G10(S)-45
		1450	1550	40	I/O	SOT1135	BLF6G15L(S)-40RN
		1800	2000	45	I/O	SOT608	BLF6G20(S)-45
		2110	2170	40	I/O	SOT1121	BLF6G22L(S)-40P
		2500	2700	40	I/O	SOT1121	BLF6G27L(S)-40P
		3400	3800	50	I/O	SOT502	BLF6G38(LS)-50
	Integrated Doherty	2010	2025	50	O	SOT1130	BLD6G21L(S)-50
		2110	2170	50	I/O	SOT1130	BLD6G22L(S)-50

Function	Product	$P_{L(1\ dB)}$ @ 940 MHz	Package	Type
MPA (medium power amplifier)	MMIC	24 dBm	SOT89	BGA7024
		28 dBm		BGA7027
		25 dBm	SOT908	BGA7124
		28 dBm		BGA7127
		30 dBm		BGA7130

Function	Product	Gain range	Package	Type
Dual VGA (variable-gain amplifier)	MMIC	24 dB	SOT617	BGA7350
		28 dB		BGA7351

Function	Product	Frequency range	Package	Type
Dual mixer	MMIC	1.7 - 2.7 GHz	SOT1092	BGX7220
		0.7 - 1.2 GHz		BGX7221

Function	Product	Package	Type
LNA	SiGe:C MMIC	SOT650	BGU7051
			BGU7052
			BGU7053
		SOT1301	BGU7060
			BGU7061
			BGU7062
			BGU7063

Function	Product	Noise	Package	Type
PLL + VCO (LO generator)	MMIC	-131 dBc/Hz @ 1 MHz offset @ 5.3 GHz	SOT617	BGX7300*

* Check status in section 3.1, as this type is not yet released for mass production

Product highlight:
BGX7221 MMIC dual down-mixer

The BGX7221 combines a pair of high performance, high linearity down-mixers for use in receivers that have a common local oscillator used with, for example, main and diversity paths. The device covers frequency bands from 1700 to 2700 MHz with an extremely flat behavior.

Features

- 8.5 dB conversion gain over all bands
- 13 dBm input, 1 dB compression point
- 25.5 dBm input third-order intercept point
- 10 dB (typ) small signal noise figure
- Integrated active biasing
- Single +5 V supply operation
- Power-down per mixer with hardware control pins
- Low bias current in power-down mode
- Matched 50 Ω single-ended RF and LO input impedances
- ESD protection at all pins

1.2 Broadband communication infrastructure

1.2.1 CATV optical (optical node with multiple out-ports)

Application diagram

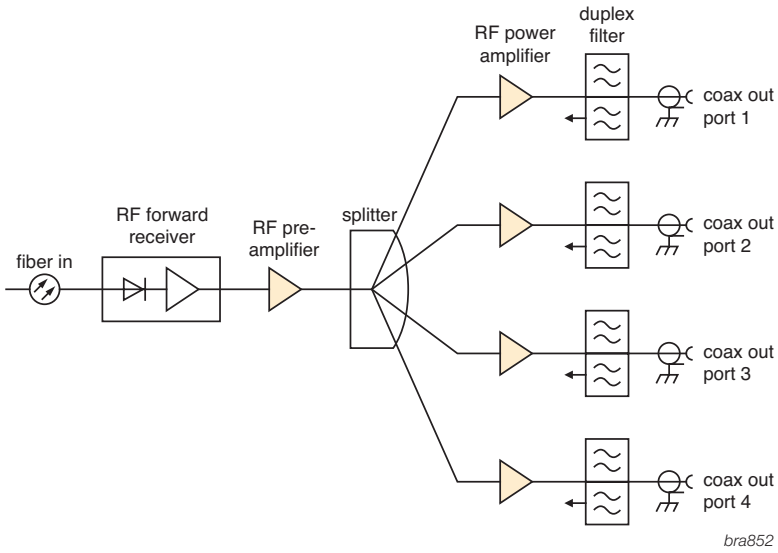

Recommended products

Function	Product	Frequency	Package	Type
RF forward receiver	Forward path receiver	870 MHz	SOT115	BGO807C
			SOT115	BGO807CE

Function	Product	Frequency	Gain (dB)	Type
RF pre-amplifier	Power doubler	870 MHz	18.2 - 18.8	BGD812
	Push-pulls	870 MHz	18 - 19	BGY885A
			21 - 22	BGY887
		1 GHz	23 - 24.5	CGY1043
			27 - 28.5	CGY1047

Function	Product	Frequency	Gain (dB)	Type
RF power amplifier	Power doublers	870 MHz	22 - 24	CGD942C
			24 - 26	CGD944C
		1 GHz	22 - 23.5	CGD1042Hi
			26.5 - 28	CGD1046Hi

Product highlight:
BGO807CE optical receiver

The BGO807CE is an integrated optical receiver module that provides high output levels and includes an integrated temperature-compensated circuitry. In your optical node design, BGO807CE enables a high performance/ price ratio and ruggedness. When upgrading an HFC network from analog to digital, our BGO807CE is the perfect fit.

Features

- Excellent linearity
- Low noise
- Excellent flatness
- Standard CATV outline
- Rugged construction
- Gold metallization ensures excellent reliability
- High optical input power range

1.2.2 CATV electrical (line extenders)

Application diagram

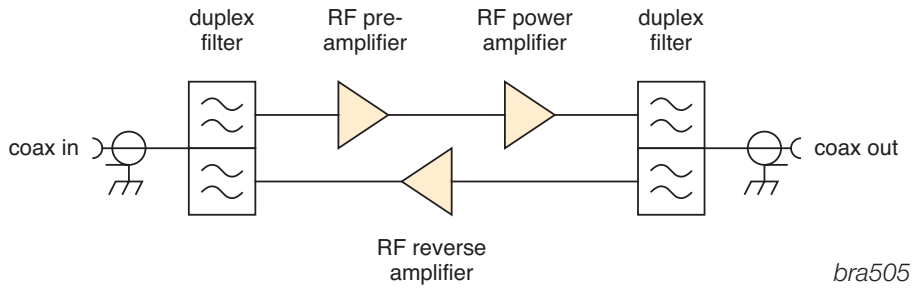

Recommended products

Function	Product	Frequency	Gain (dB)	Type
RF pre-amplifier	Push-pulls	550 MHz	33.5 - 35.5	BGY588C
		750 MHz	33.2 - 35.2	BGE788C
			18 - 19	BGY785A
			21 - 22	BGY787
		870 MHz	18 - 19	BGY885A
			21 - 22	BGY887
			33.5 - 34.5	BGY888
			34.5 - 36.5	CGY888C
		1003 MHz	18 - 19	BGY1085A
			21 - 22.5	CGY1041
			23 - 24.5	CGY1043
			27 - 28.5	CGY1047
			29 - 31	CGY1049
			32 - 34	CGY1032

Function	Product	Frequency	Gain (dB)	Type
RF reverse amplifier	Reverse hybrids	5-75 MHz	29.2 - 30.8	BGY68
		5-120 MHz	24.5 - 25.5	BGY66B
		5-200 MHz	23.5 - 24.5	BGY67A

All available in SOT115 package

Function	Product	Frequency	Gain (dB)	Type
RF power amplifier	Power doublers	750 MHz	18.2 - 18.8	BGD712
			18.2 - 18.8	BGD712C
			20 - 20.6	BGD714
		870 MHz	18.2 - 18.8	BGD812
			19.7 - 20.3	BGD814
			22 - 23	CGD942C
			24 - 26	CGD944C
		1003 MHz	22 - 24	CGD1042H
			24 - 26	CGD1044H
			19.5 - 22	CGD1040Hi
			22 - 23.5	CGD1042Hi
			23.5 - 25.5	CGD1044Hi
			26 - 28	CGD1046Hi
			22 - 24	CGD982HCi
			23.5 - 25.5	CGD985HCi
			26 - 28	CGD987HCi

Product highlight: CGD1046Hi

Capable of supporting high output power, the CGD1046Hi is primarily designed for use in fiber deep-optical-node applications (N+1/2/3). This 1 GHz hybrid amplifier solution offers an extended temperature range, high-power overstress capabilities in case of surges, and high ESD levels. The result is a low cost of ownership, with durability and superior ruggedness.

Features

- High output power
- High power gain for power doublers
- Extremely low noise
- Dark Green products
- GaAs HFET dies for high-end applications
- Rugged construction
- Superior levels of ESD protection
- Integrated ringwave protection
- Design optimized for digital channel loading
- Temperature-compensated gain response
- Optimized heat management
- Excellent temperature resistance

Looking for more information on our wideband LNAs supporting multi-tuner applications in TVs, DVR/PVRs, and STBs? See section 2.3.1 LNAs with programmable gain & bypass option for improved tuner performance.

1.3 TV and satellite

1.3.1 Network interface module (NIM) for TV reception

Application diagram

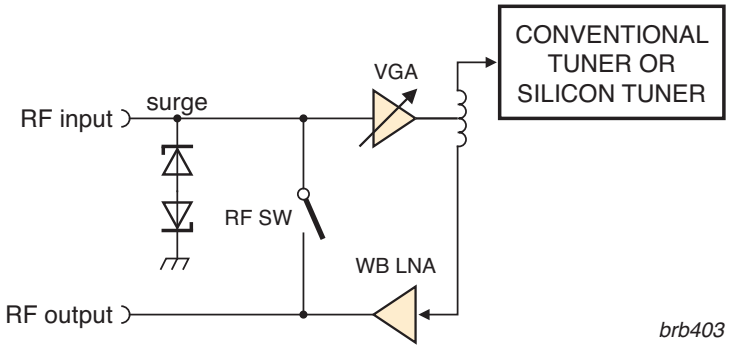

Recommended products

Function	Product	V_{cc} (V)	Gain (db)	Package	Type
LNA	MMIC	5	10	SOT363	BGU7031
		5	10	SOT363	BGU7032
			-2		
		5	10	SOT363	BGU7033
			5		
			-2		
		3.3	10	SOT363	BGU7041
		3.3	10	SOT363	BGU7042
			-2		
		3.3	14	SOT363	BGU7044
		3.3	14	SOT363	BGU7045
			-2		

Product highlight:

Make a high-performance active splitter in a NIM tuner with the BGU703x/ BGU704x

Today's TV tuners require complicated signal handling and benefit from flexibility in design. The front-end of a TV signal receiver is no longer just a tuned receiver, but has evolved into an RF network interface module (NIM) with tuned demodulators, active splitters, and remodulators. The active splitter requires an LNA with excellent linearity. NXP has developed two new series of LNA/VGA MMICs (BGU703x/BGU704x), designed especially for high linearity (P3O of 29 dBm) in low-noise applications such as an active splitter in a NIM tuner. The BGU703x family operates at a supply voltage of 5 V and is intended for use with normal can tuners. The BGU704x family operates at 3.3 V and works seamlessly with our Si tuner ICs, which also operate at 3.3 V.

Recommended products

Function	Product		Package	Type
RF Switch / PLT switch	MOSFET	5 V silicon RF switch	SOT23	BF1107
			SOT143B	BF1108
			SOT143R	BF1108R
			SOT343	BF1108W
			SOT343R	BF1108WR
		3.3 V silicon RF switch	SOT143B	BF1118
			SOT143R	BF1118R
			SOT343	BF1118W
			SOT343R	BF1118WR

Function	Product		Package	Type
AGC control amplifier	MOSFET	2-in-1 with band switch @ 5 V	SOT363	BF1215
		2-in-1 @ 5 V	SOT363	BF1216
		5 V	SOT343	BF1217

Note: given that there is now an LNA before the MOSFET, the gain of these MOSFETs is made slightly lower and the cross-modulation somewhat higher. That way, the MOSFET is not under AGC even under nominal RF input level.

BGU703x evaluation board

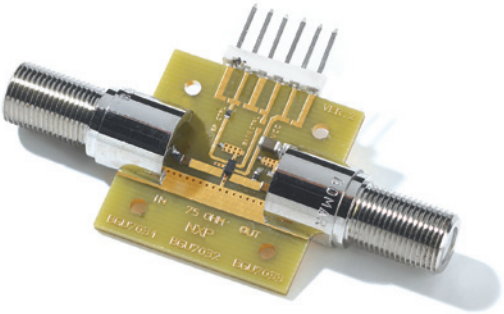

Product highlight:
Save energy with the BF11x8

The BF11x8 series are small-signal, RF-switching MOSFETs that can be used to switch RF signals up to 1 GHz. Using the BF11x8 series as an RF switch saves a considerable amount of energy. When a recording device (DVD-R, HDD-R, VCR, DVR) is powered off, viewers can still watch TV, although the antenna is looped via the recording device. Without the BF11x8, the antenna signal is lost. When power to the recording device is on, the BF11x8 is open, so the RF signal travels via the recording device to the TV tuner. When power to the recording device is off, the BF11x8 closes. This ensures that the RF signal is looped through directly to the TV tuner and guarantees TV reception. This saves energy because the recording device can be powered off.

1.3.2 Basic TV tuner

Application diagram

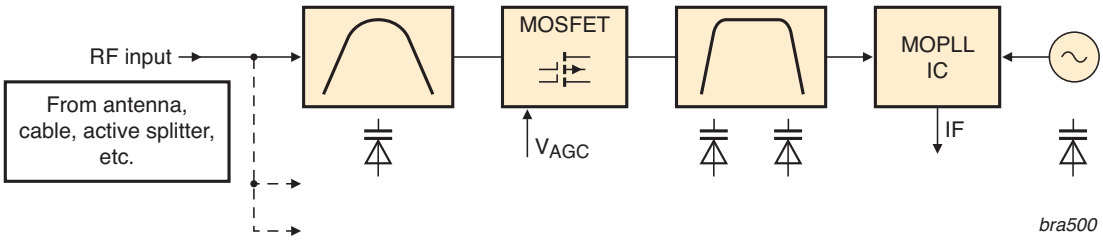

Recommended products

Function	Product		Package	Type
Input filter	Varicap diode	VHF low	SOD323	BB152
			SOD523	BB182
		VHF high	SOD323	BB153
			SOD523	BB178
			SOD523	BB187
			SOD882D	BB178LX
			SOD882D	BB187LX
		UHF	SOD323	BB149A
			SOD882D	BB179LX
			SOD523	BB179
			SOD523	BB189

Function	Product		Package	Type
RF pre-amplifier	MOSFET	5 V	SOT143	BF1201
			SOT143	BF1202
			SOT143	BF1105
			SOT143	BF1211
			SOT143	BF1212
		2-in-1 @ 5 V	SOT363	BF1102R
			SOT363	BF1203
			SOT363	BF1204
			SOT363	BF1206
			SOT363	BF1207
			SOT666	BF1208
			SOT666	BF1208D
			SOT363	BF1210
			SOT363	BF1214
			SOT363	BF1218

Function	Product	Package	Type
Bandswitching	Bandswitch diode	SOD523	BA277
		SOD523	BA891
		SOD523	BA591

Function	Product		Package	Type
Bandpass filter	Varicap diode	VHF low	SOD323	BB152
			SOD523	BB182
		VHF high	SOD323	BB153
			SOD882D	BB178LX
			SOD523	BB178
			SOD882D	BB187LX
			SOD523	BB187
		UHF	SOD323	BB149A
			SOD882D	BB179LX
			SOD523	BB179
			SOD523	BB189

Function	Product		Package	Type
Oscillator	Varicap diode	VHF low	SOD323	BB152
			SOD523	BB182
		VHF high	SOD323	BB153
			SOD882D	BB178LX
			SOD523	BB178
			SOD882D	BB187LX
			SOD523	BB187
		UHF	SOD323	BB149A
			SOD882D	BB179LX
			SOD523	BB179
			SOD523	BB189

Function	Product		Package	Type
RF pre-amplifier	MOSFET	2-in-1 with band switch @ 5 V	SOT363	BF1215
		2-in-1 @ 5 V	SOT363	BF1216
		5 V	SOT343	BF1217

Product highlight:
BGU7045 1 GHz wideband low-noise amplifier with bypass

The BGU7045 MMIC is a 3.3 V wideband amplifier with bypass mode. It is designed specifically for high-linearity, low-noise applications over a frequency range of 40 MHz to 1 GHz. It is especially suited to set-top box applications. The LNA is housed in a 6-pin SOT363 plastic SMD package.

Features

- Internally biased
- Noise figure of 2.8 dB
- High linearity with an $IP3_O$ of 29 dBm
- 75 Ω input and output impedance
- Power-down during bypass mode
- Bypass mode current consumption < 5 mA
- ESD protection > 2 kV HBM and >1.5 kV CDM on all pins

1.3.3 Satellite outdoor unit, twin low-noise block (LNB) with discrete components

Looking for fully integrated mixer / oscillator / downconverter for universal single LNB?
See section 2.3.2 Complete satellite portfolio for all LNB architectures

Application diagram

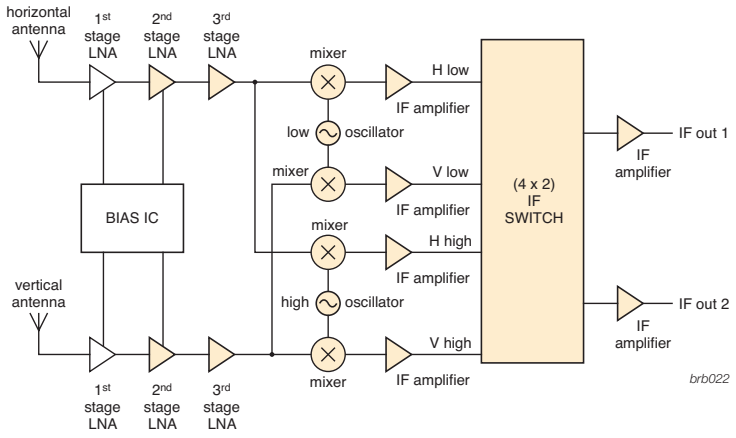

Recommended products

Function	Product		Package	Type
2nd & 3rd stage LNA	RF transistor	SiGe:C transistor	SOT343F	BFU710F
				BFU730F

Function	Product		Package	Type
Oscillator	RF bipolar transistor	Wideband transistor	SOT343	BFG424W
			SOT343F	BFG424F
	RF transistor	SiGe:C transistor	SOT343F	BFU660F
				BFU710F
				BFU730F

Function	Product		Package	Type
IF switch	RF diode	PIN diode	Various	BAP64^
			Various	BAP51^
			Various	BAP1321^
			Various	BAP50^
			Various	BAP63^

Function	Product		Package	Type
1st stage IF amplifier	MMIC	IF gain block	SOT363	BGA2800
			SOT363	BGA2801
			SOT363	BGA2802
			SOT363	BGA2803
			SOT363	BGA2815
			SOT363	BGA2816
			SOT363	BGA2817
			SOT363	BGA2818
			SOT363	BGA2850
			SOT363	BGA2851
			SOT363	BGA2866
	RF bipolar transistor	Wideband transistor	SOT343	BFG424W
			SOT343F	BFG424F

^ Also available in ultra-small leadless package SOD882D

Function	Product		Package	Type
Output stage IF amplifier	MMIC	IF gain block	SOT363	BGA2800
			SOT363	BGA2801
			SOT363	BGA2815
			SOT363	BGA2816
			SOT363	BGA2818
			SOT363	BGA2850
			SOT363	BGA2865
			SOT363	BGA2866
			SOT363	BGA2867
			SOT363	BGA2870
			SOT363	BGA2874
			SOT363	BGM1014
	RF bipolar transistor	Wideband transistor	SOT343	BFG325
2nd stage LNA	RF transistor	SiGe:C	SOT343F	BFU710F
				BFU730F

Function	Product		Package	Type
Mixer	RF transistor	SiGe:C transistor	SOT343F	BFU710F
				BFU730F

Product highlight:
BGA28xx-family of IF gain blocks

The BGA28xx IF gain blocks are silicon Monolitic Microwave Integrated Circuit (MMIC) wideband amplifiers with internal matching circuitry in a 6-pin SOT363 plastic SMD package.

Features

- No output inductor necessary when used at the output stage
- Internally matched to 50 Ω
- Reverse isolation > 30 dB up to 2 GHz
- Good linearity with low second- and third-order products
- Unconditionally stable (K > 1)

1.3.4 Satellite outdoor unit, twin low-noise block (LNB) with integrated mixer / oscillator / downconverter

Application diagram

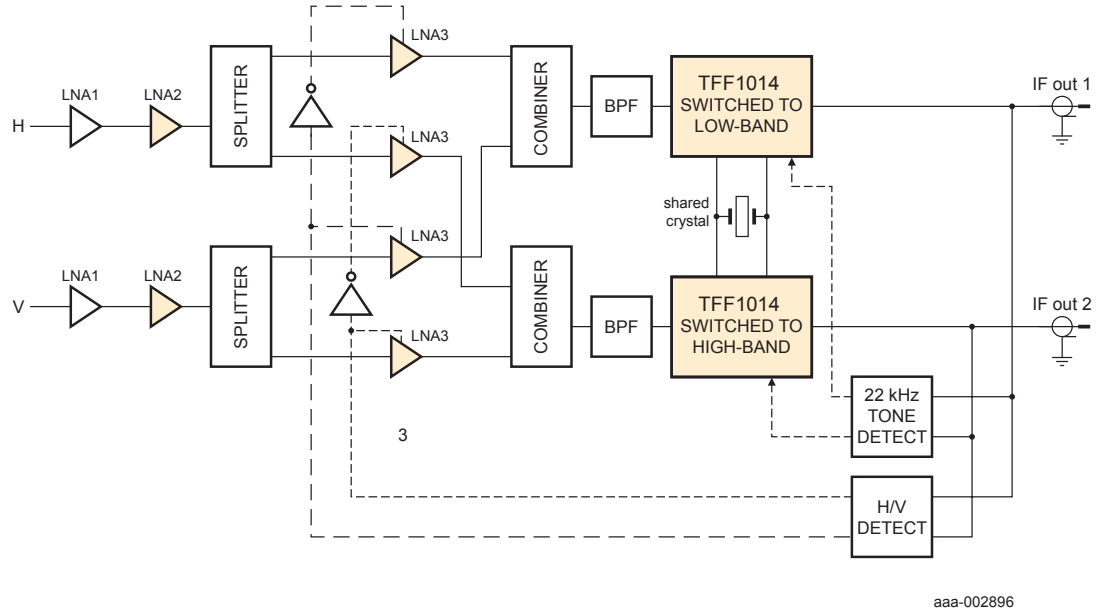

Recommended products

Function	Product		Package	Type
2nd & 3rd stage LNA	RF transistor	SiGe:C transistor	SOT343F	BFU710F
				BFU730F

Function	Product	Package	Type
Mixer/ oscillator/ downconverter	RF IC	SOT763	TFF1014HN

Product highlight:

Industry's lowest-power integrated Ku-band downconverters

These Universal DVB-S compliant Ku-band downconverters consume about 50% less current (52 mA) than other integrated solutions. They are fully integrated (PLL synthesizer/mixer/IF gain block) and RF tested – which results in significantly decreased manufacturing time. Stability of the local oscillator is guaranteed, which improves overall system reliability over temperature and time, and eliminates the need for manual alignment in production.

Features

- Ultra-low current consumption (I_{CC} = 52 mA)
- Low phase noise (1.5° RMS typ)
- Integration bandwidth from 10 kHz to 13 MHz
- Small PCB footprint
  - DHVQFN16 package (2.5 x 3.5 x 0.85 mm)
  - Only 7 external components
  - No inductors necessary

1.3.5 Satellite multi-switch box - 4 x 4 (up to 16 x 16) / DiSEqC / SMATV

Application diagram

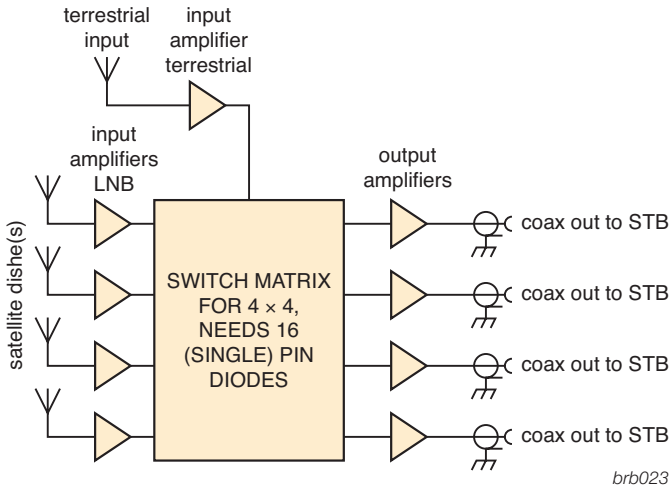

Recommended products

Function	Product		Package	Type
Input amplifier terrestrial	MMIC	General purpose medium power amplifier	SOT89	BGA6289
				BGA6489
				BGA6589
				BGA7024
			SOT908	BGA7124

Function	Product		Package	Type
Input amplifier LNB	MMIC	General purpose amplifier	SOT363	BGA2771
			SOT363	BGA2866
			SOT363	BGA2867
			SOT363	BGA2818
	RF bipolar transistor	Wideband transistor	SOT343	BFG325
			SOT343	BFG425W
			SOT143	BFG520
			SOT143	BFG540
		SiGe:C transistor	SOT343F	BFU660F
				BFU725F/N1
				BFU730F

Function	Product		Package	Type
Switch matrix	RF diode	PIN diode	Various	BAP50^
				BAP51^
				BAP63^
				BAP64^
				BAP70^
				BAP1321^
	RF transistor	SiGe:C transistor	SOT343F	BFU725F/N1
				BFU730F

^ Also available in ultra-small leadless package SOD882D

Function	Product		Package	Type
Output amplifier	MMIC	General purpose medium power amplifier	SOT89	BGA6289
				BGA6489
				BGA6589
				BGA7024
			SOT908	BGA7124
		General purpose amplifier	SOT363	BGM1011
			SOT363	BGA2869
	RF bipolar transistor	Wideband transistor	SOT223	BFG135
			SOT223	BFG 591
			SOT223	BFG198
			SOT143	BFG540
		SiGe:C transistor	SOT343F	BFU725F/N1
				BFU730F

Product highlight:
PIN diodes for switching matrix

In addition to delivering outstanding RF performance, this component simplifies design-in because of its extremely low forward resistance, diode capacitance, and series inductance. Significant board space is saved by supplying a range of highly compact package options, including SOD523, SOD323 and leadless SOD882D.

Features

- High isolation, low distortion, low insertion loss
- Low forward resistance (Rd) and diode capacitance (Cd)
- Ultra-small package options

1.3.6 VSAT

Application diagram

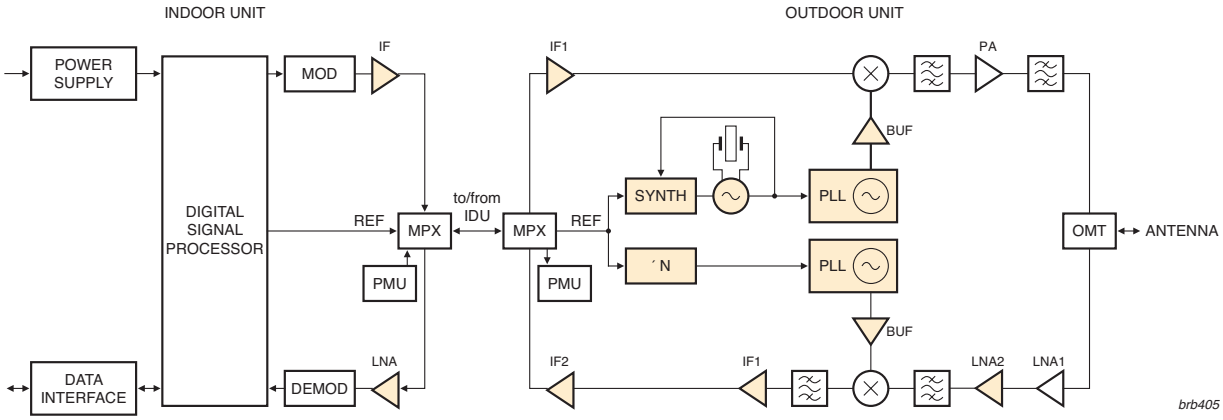

Recommended products

Indoor unit

Function	Product		Package	Type
IF	MMIC	IF gain block	SOT363	BGA2714
				BGA2748
				BGA2771
				BGA2800
				BGA2801
				BGA2815
				BGA2816
				BGM1012

Function	Product		Package	Type
LNA	RF transistor	SiGe:C transistor	SOT343F	BFU725F/N1
				BFU710F
				BFU725F/N1
				BFU730F
		Wideband transistor	SOT343R	BFG425W
				BFG424W
			SOT143R	BFG325/XR

Product highlight:
TFF1003HN Low phase noise LO generator for VSAT applications

The TFF1003HN is a Ku-band frequency generator intended for low phase noise local-oscillator (LO) circuits for Ku-band VSAT transmitters and transceivers. The specified phase noise complies with IESS-308 from Intelsat.

Features

- Phase noise compliant with IESS-308 (Intelsat)
- LO generator with VCO range: 12.8 to 13.05 GHz
- Input signal 50 to 816 MHz
- Divider settings: 16, 32, 64, 128, or 256
- Output level −5 dBm; stability ±2 dB
- Third- or fourth-order
- Internally stabilized voltage references for loop filter

Recommended products

Outdoor unit

Function	Product		Package	Type
IF	MMIC	IF gain block	SOT363	BGA2800
				BGA2801
				BGA2815
				BGA2816
				BGA2850
				BGA2865
				BGA2866
				BGM1014
				BGM1013
				BGM1012
				BGA2714

Function	Product		Package	Type
LNA2	RF transistor	SiGe:C transistor	SOT343F	BFU610F
				BFU630F
				BFU660F
				BFU690F
				BFU710F
				BFU725F/N1
				BFU730F
				BFU760F
				BFU790F
	MMIC	SiGe:C MMIC	SOT891	BGU7003

Function	Product		Package	Type
PLL	RF IC	SiGe:C IC	SOT616	TFF1003HN
				TFF1007HN
				TFF11xxxHN^

Function	Product		Package	Type
Oscillator	RF transistor	Wideband transistor	SOT343R	BFG424W
				BFG425W
		SiGe:C transistor	SOT343F	BFU610F
				BFU630F
				BFU660F
				BFU690F
				BFU710F
				BFU725F/N1
				BFU730F
				BFU760F
				BFU790F

Function	Product		Package	Type
Synth	RF diode	Varicap diode	SOD523	BB202

Function	Product		Package	Type
Buffer	RF transistor	SiGe:C transistor	SOT343F	BFU610F
				BFU630F
				BFU660F
				BFU690F
				BFU710F
				BFU725F/N1
				BFU730F
				BFU760F
				BFU790F

^ 17 different types with LO ranges: 7-15 GHz, see 3.4.4

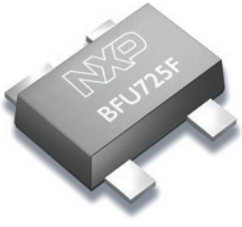

Product highlight:
TFF1007HN Low phase noise LO generator for VSAT applications

The TFF1007HN is a Ku-band frequency generator intended for low phase noise local-oscillator (LO) circuits for Ku-band VSAT transmitters and transceivers. The specified phase noise complies with IESS-308 from Intelsat.

Features

- Divider settings: 64
- Input signal 230.46 to 234.38 MHz
- Internally stabalized voltage references for loop filter and output power level
- LO generator with VCO range: 14.75 to 15 GHz
- Output level -4 dBm minimum
- Phase noise compliant with IESS-308 (Intelsat)
- Third- or fourth-order PLL

1.4 Portable devices

1.4.1 GPS

Application diagram

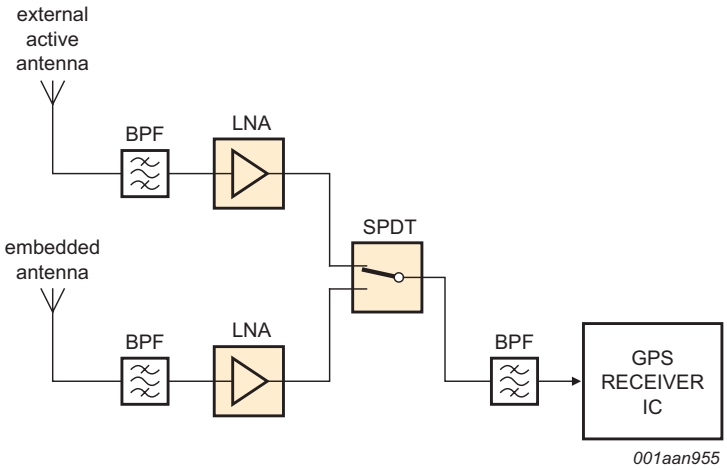

Recommended products

Function	Product		Package	Type
SPDT switch	RF diode	PIN diode	Various	BAP64^
				BAP1321^
				BAP51^

Function	Product		Package	Type
LNA	RF transistor	SiGe:C transistor	SOT343F	BFU725F /N1
				BFU710F
				BFU730F
	MMIC	SiGe:C MMIC	SOT891	BGU7003
			SOT886	BGU7003W
				BGU7004
				BGU7005
				BGU7007
				BGU7008
				BGU8007
			WL-CSP	BGU8006

^ Also available in ultra-small leadless package SOD882D

Product highlight:
BGU8007 SiGe:C LNA MMIC for GPS, GLONASS, and Galileo

The BGU8007 is a low-noise amplifier (LNA) for GNSS receiver applications in a plastic leadless 6-pin extremely-small SOT886 package. It requires only one external matching inductor and one external decoupling capacitor.

Features

- Covers full GNSS L1 band, from 1559 to 1610 MHz
- Noise figure (NF) = 0.75 dB
- Gain = 19.5 dB
- High 1 dB compression point of -12 dBm
- High out-of-band IP3 of 4 dBm
- Supply voltage 1.5 to 2.85 V
- Power-down mode current consumption < 1 µA
- Optimized performance at low supply current of 4.8 mA
- Integrated temperature stabilized bias for easy design
- Requires only one input matching inductor and one supply decoupling capacitor

1.4.2 FM radio

Application diagram

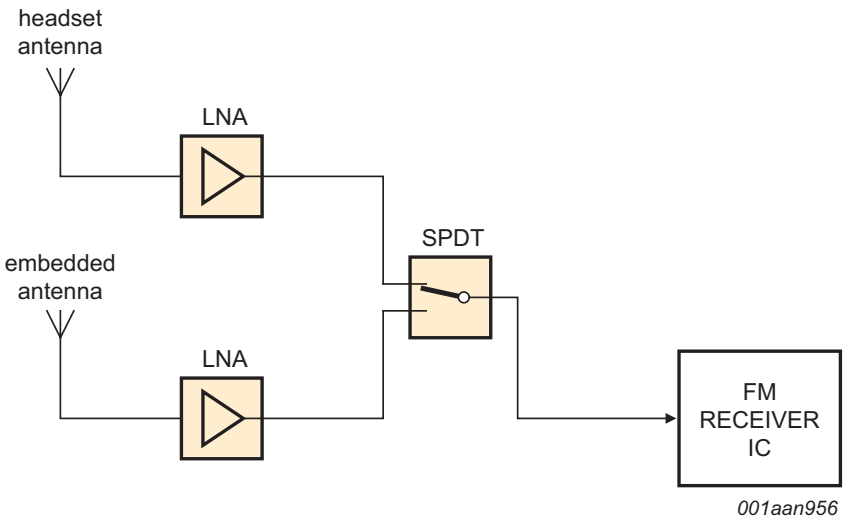

Recommended products

Function	Product		Package	Type
SPDT switch	RF diode	PIN diode	Various	BAP64^
				BAP 65^
				BAP1321^
				BAP51^

Function	Product		Package	Type
LNA	RF transistor	SiGe:C transistor	SOT343F	BFU725F /N1
	MMIC	SiGe:C MMIC	SOT1209	BGU6101
				BGU6102
				BGU6104
			SOT891	BGU7003
			SOT886	BGU7003W

^ Also available in ultra-small leadless package SOD882D

Product highlight: BGU6102 MMIC wideband amplifier

The BGU6102 is an unmatched MMIC featuring an integrated bias-enable function and a wide supply voltage. It is part of a family of three products (BGU6101, BGU6102, BGU6104), and is optimized for 2 mA operation.

Features

- Applicable between 40 MHz and 4 GHz
- High ohmic FM LNA: 13 dB gain and 1.0 dB NF at 100 MHz
- 50 Ω FM LNA: 15 dB gain and 1.3 dB NF at 100 MHz
- Integrated temperature-stabilized bias for easy design
- Bias current configurable with external resistor
- Power-down mode current consumption < 6 μA
- ESD protection > 1 kV Human Body Model (HBM) on all pins
- Supply voltage from 1.5 to 5 V

1.4.3 China Mobile Multimedia Broadcasting (CMMB) in UHF band 470 – 862 MHz

Application diagram

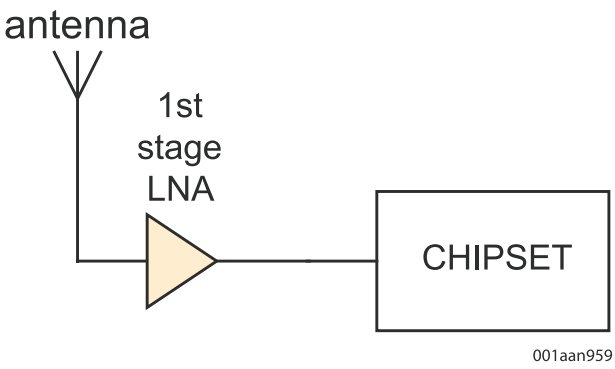

Recommended products

Function	Product		Package	Type
LNA	MMIC	SiGe:C MMIC	SOT891	BGU7003
			SOT886	BGU7003W
			SOT1209	BGU6101
				BGU6102
				BGU6104

Product highlight: BGU7003W MMIC wideband amplifier

The BGU7003W MMIC is a wideband amplifier in SiGe:C technology for high-speed, low-noise applications. It is housed in a plastic leadless 6-pin extremely thin small outline SOT886 package.

Features

- Low-noise, high-gain microwave MMIC
- Bias current configurable with external resistor
- Noise figure NF = 1.2 dB at 600 MHz
- Insertion power gain = 19.5 dB at 600 MHz
- Power-down mode current consumption < 1 μA
- Optimized performance at low supply current of 5 mA
- ESD protection > 1 kV HBM on all pins

1.4.4 Cellular receiver

Application diagram

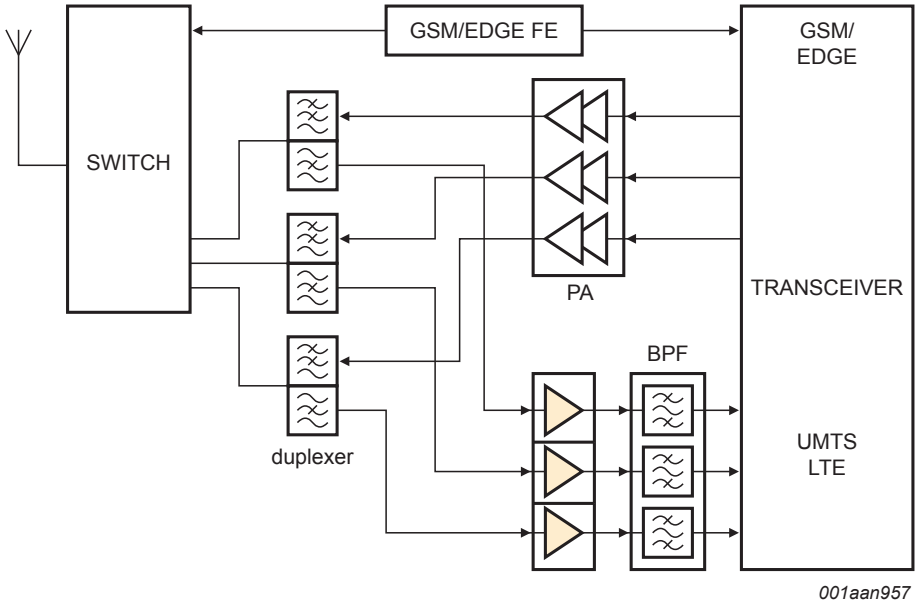

Recommended products

Function	Product		Package	Type
LNA	MMIC	SiGe:C MMIC	SOT891	BGU7003
			SOT886	BGU7003W

Product highlight:
BGU7003 MMIC wideband amplifier

The BGU7003 MMIC is a wideband amplifier in SiGe:C technology for high-speed, low-noise applications. It is housed in a plastic leadless 6-pin extremely thin small outline SOT886 package.

Features

- Applicable between 40 MHz and 6 GHz
- LTE LNA: 1 dB NF, 18.5 dB gain and -5 dBm IIP3 at 750 MHz
- Integrated temperature-stabilized bias for easy design
- Bias current configurable with external resistor
- Power-down mode current consumption < 1 μA
- ESD protection > 1 kV Human Body Model (HBM) on all pins

1.4.5 802.11n DBDC and 802.11ac WLAN

Application diagram

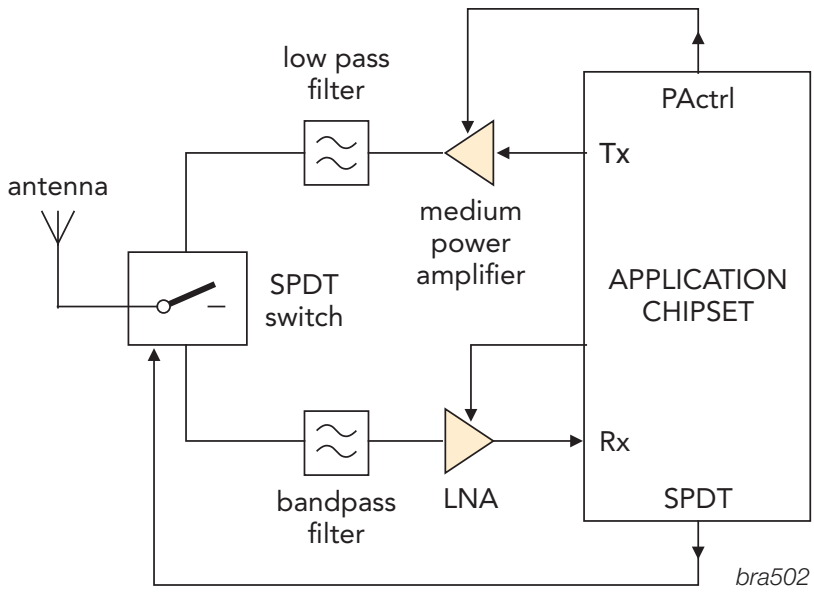

Recommended products

Function	Product		Package	Type
Medium power amplifier	MMIC	Medium power amplifier	SOT89	BGA7024
				BGA7027
			SOT908	BGA7124
				BGA7127

Function	Product		Package	Type
LNA	RF transistor	SiGe:C transistor	SOT343F	BFU730F
				BFU760F
	MMIC	SiGe:C MMIC	SOT883C	BFU730LX

Product highlight:
BFU760F NPN silicon germanium microwave transistor

The BGU760F is part of the family of 6th (Si) and 7th (SiGe:C) generation RF transistors and can be used to perform nearly any RF function. These next-generation wideband transistors offer the best RF noise figure versus gain performance, drawing the lowest current. This performance allows for better signal reception at low power and enables RF receivers to operate more robustly in noisy environments.

Features

- System optimized gain of 12.5 dB @ 2.4 GHz and 11 dB @ 5.5 GHz
- Low noise figure (NF) of 1.1 dB @ 2.4 GHz and 5.5 GHz
- High input 1 dB gain compression ($P_{i(1dB)}$) of -8 dBm @ 2.4 GHz and -5 dBm @ 5.5 GHz
- High input third order intercept point $IP3_i$ of +3 dBm @ 2.4 GHz and +8 dBm @ 5.5 GHz
- Only 8 external components required

1.4.6 Generic RF front-end

Application diagram

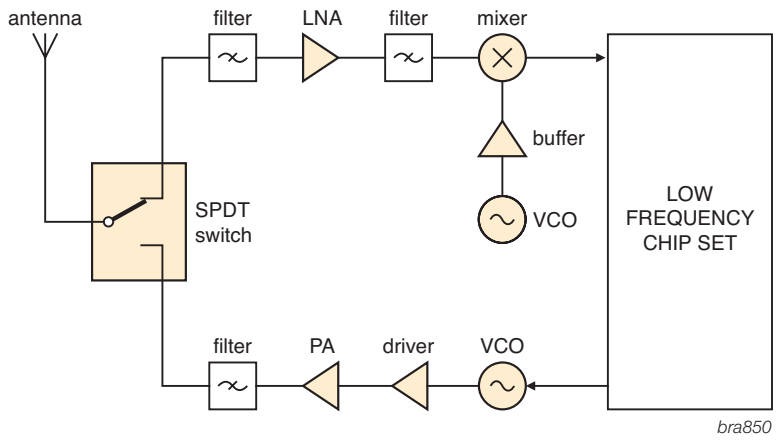

Recommended products

Function	Product		Package	Type
SPDT switch	RF diode	Bandswitch diode	SOD523	BA277
			SOD323	BA591
		PIN diode	Various	BAP51^
			Various	BAP1321^

Function	Product		Package	Type
Mixer	RF bipolar transistor	Wideband transistor	SOT343	BFG410W
			SOT343	BFG425W
			SOT343	BFG480W
	MMIC	Linear mixer	SOT363	BGA2022

Function	Product		Package	Type
LNA	RF bipolar transistor	Wideband transistor	SOT23	PBR951
			SOT323	PRF957
			SOT323	PRF947
		SiGe:C transistor	SOT343F	BFU610F
				BFU630F
				BFU660F
				BFU690F
				BFU710F
				BFU725F/N1
				BFU730F
				BFU760F
				BFU790F
	MMIC	Low-noise wideband ampl.	SOT1209	BGU6101
				BGU6102
				BGU6104

Function	Product		Package	Type
Buffer	RF bipolar transistor	Wideband transistor	SOT23	PBR951
			SOT323	PRF957
			SOT323	PRF947
			SOT416	PRF949

Function	Product		Package	Type
Power amplifier	MMIC	General-purpose wideband amplifier	SOT89	BGA6289
				BGA6489
				BGA6589
				BGA7024
				BGA7027

Function	Product		Package	Type
VCO	Varicap diodes	VCO varicap diodes	SOD523	BB198
			SOD323	BB156

Function	Product		Package	Type
Driver	RF bipolar transistor	Wideband transistor	SOT323	PRF957
			SOT23	PBR951
	MMIC	Gen-purp wideband amp	SOT363	BGA2771
			SOT363	BGA2866

^ Also available in ultra-small leadless package SOD882D

Product highlight:
BFU790F silicon NPN germanium microwave transistor

Silicon NPN germanium microwave transistor for high-speed, low-noise applications in a plastic, 4-pin dual-emitter SOT343F package.

Features

- Low-noise, high-linearity microwave transistor
- 110 GHz f_T silicon germanium technology
- High maximum output power at 1 dB compression of 20 dBm at 1.8 GHz

1.5 Automotive

1.5.1 SDARS & HD radio

Application diagram

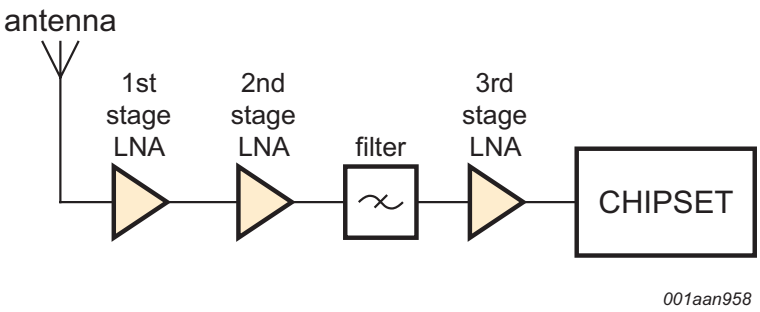

Recommended products

Function	Product		Package	Type
1st stage LNA	MMIC	Low-noise wideband amplifier	SOT343F	BFU730F

Function	Product		Package	Type
2nd stage LNA	MMIC	General-purpose wideband amplifier	SOT343F	BFU690F
			SOT363	BGA2869
				BGA2851
				BGA2803

Function	Product		Package	Type
3rd stage LNA	RF transistor	SiGe:C transistor	SOT343F	BFU690F
				BFU725F/N1
				BFU790F

Product highlight:
BFU730F NPN wideband silicon germanium RF transistor

The BGU730F is part of the family of 6th (Si) and 7th (SiGe:C) generation RF transistors and can be used to perform nearly any RF function. These next-generation wideband transistors offer the best RF noise figure versus gain performance, drawing the lowest current. This performance allows for better signal reception at low power and enables RF receivers to operate more robustly in noisy environments.

Features

At 2.3 GHz

- High maximum power gain (Gp) of 17.6 dB
- Noise figure (NF) of 0.8 dB
- Input 1dB gain compression ($P_{i(1dB)}$) of -15 dBm
- Input third order intercept point $IP3_i$ of +4.7 dBm

1.5.2 Remote keyless entry, RF generic front-end with dedicated antenna for reception and transmission

Application diagram

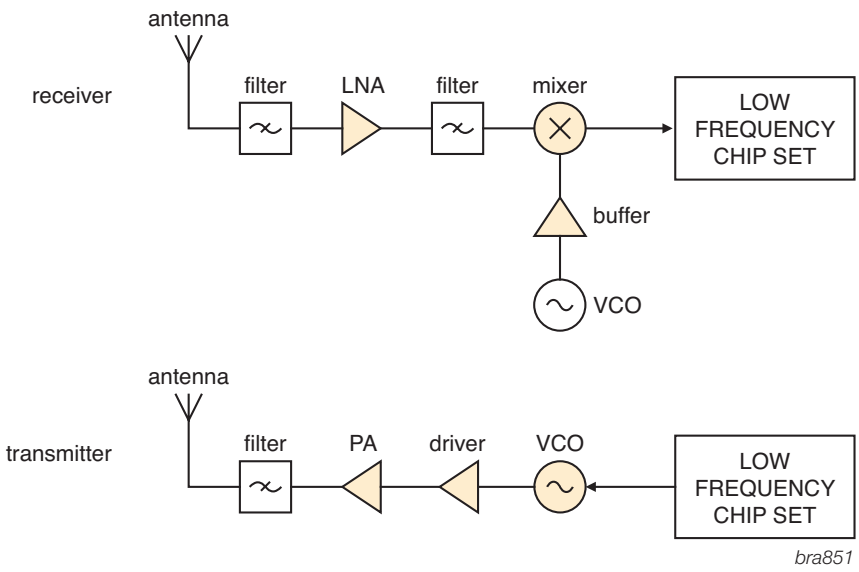

Recommended products

Function	Product		Package	Type
LNA	RF bipolar transistor	Wideband transistor	SOT23	PBR951
			SOT323	PRF957
			SOT323	PRF947
	MMIC	Low-noise wideband ampl.	SOT1209	BGU6101
				BGU6102
				BGU6104
		SiGe:C MMIC	SOT886	BGU7003W

Function	Product		Package	Type
Driver	RF bipolar transistor	Wideband transistor	SOT323	PRF957
			SOT23	PBR951
	MMIC	Gen-purp wideband amp	SOT363	BGA2771
			SOT363	BGA2866

Function	Product		Package	Type
VCO	Varicap diodes	VCO varicap diodes	SOD323	BB148
			SOD323	BB149A
			SOD523	BB198
			SOD323	BB156

^ AEC-Q101 qualified (some limitations apply)

Function	Product		Package	Type
Mixer	RF bipolar transistor	Wideband transistor	SOT343	BFG410W
			SOT343	BFG425W
			SOT343	BFG480W

Function	Product		Package	Type
Buffer	RF bipolar transistor	Wideband transistor	SOT23	PBR951
			SOT323	PRF957
			SOT323	PRF947
			SOT416	PRF949

Function	Product		Package	Type
Power amplifier	RF bipolar transistor	Wideband transistor	SOT323	PRF957
			SOT23	PBR951
	MMIC	General-purpose wideband amplifier	SOT363	BGA2771
			SOT363	BGA2866
			SOT908	BGA7124

Product highlight: Varicap diodes as VCO

Varicap diodes are principally used as voltage varicap capacitors, with their diode function a secondary option. These devices are ideal for voltage controlled oscillators (VCOs) in ISM band applications.

Features

- Excellent linearity
- Excellent matching
- Very low series resistance
- High capacitance ratio

1.5.3 Tire pressure monitoring system

Application diagram

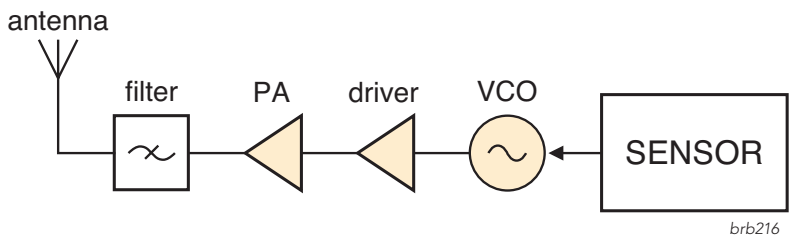

Recommended products

Function	Product		Package	Type
PA	RF bipolar transistor	Wideband transistor	SOT23	BFR92A
			SOT323	BFR92AW
			SOT23	BFR94A^
			SOT323	BFR93AW
			SOT323	BFR94AW^

Function	Product		Package	Type
Driver	RF bipolar transistor	Wideband transistor	SOT323	PRF957
			SOT23	PBR951
	MMIC	Amplifier	SOT363	BGA2031/1
		Gen-purp wideband amp	SOT363	BGA2771
			SOT363	BGA2866

Function	Product		Package	Type
VCO	Varicap diodes	VCO varicap diodes	SOD523	BB198
			SOD323	BB156

^ AEC-Q101 qualified (some limitations apply)

Product highlight:
BGU6101 MMIC wideband amplifier

The BGU6101 is an unmatched MMIC featuring an integrated bias-enable function and a wide supply voltage. It is part of a family of three products (BGU6101, BGU6102, BGU6104), and is optimized for 2 mA operation.

Features

- Applicable between 40 MHz and 6 GHz
- 13 dB gain and 0.8 dB NF at 450 MHz
- 50 Ω FM LNA: 15 dB gain and 1.4 dB NF at 100 MHz
- Integrated temperature-stabilized bias for easy design
- Bias current configurable with external resistor
- Power-down mode current consumption < 1 μA
- ESD protection > 1 kV Human Body Model (HBM) on all pins

1.5.4 Car radio receiver (CREST ICs: TEF6860HL, TEF6862HL)

Application diagram

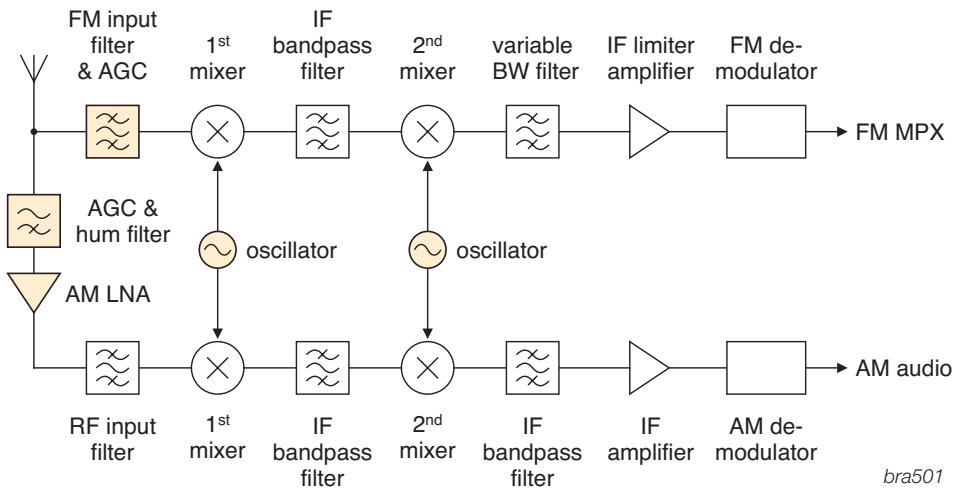

Recommended products

Function	Product		Package	Type
AM LNA	RF transistor	JFET	SOT23	BF862

Function	Product		Package	Type
FM input filter & AGC	RF diode	Varicap diode	SOT23	BB201^
			SOT23	BB207
		PIN diode	SOD523	BAP70-02
			SOD323	BAP70-03

^ OIRT

Function	Product		Package	Type
AGC & hum filter	RF diode	PIN diode	SOT363	BAP70AM

Function	Product		Package	Type
Oscillator	RF diode	Varicap diode	SOD323	BB156
			SOD523	BB208-02

Note 1:
The following recommended discrete products are applicable for NICEPACS, CCC and DDICE: NICE:TEA6840H,TEA6845H,TEA6846H, NICEPACS:TEA6848H,TEA6849H; CCC:TEF6901H,TEF6903H; DDICE:TEA6721HL. All recommended discrete products are applicable, excluding AM LNA in: DICE2:TEF6730HWCE.

Note 2:
Phones and portable radios (IC:TEA5767/68) use varicap BB202 as the FM oscillator.

Product highlight:
BF862 junction field effect transistor

Our tuning portfolio contains advanced products for car radio reception applications and in-vehicle media platforms. The NXP devices for this application ensure excellent reception quality and ease of design-in. Performance is demonstrated in reference designs. The high-performance junction FET BG862 is specially designed for AM radio amplifiers.

Features

- High transition frequency and optimized input capacitance for excellent sensitivity
- High transfer admittance resulting in high gain
- Encapsulated in the versatile and easy-to-use SOT23 package

1.6 Industrial, scientific & medical (ISM)

1.6.1 Broadcast / ISM

Application diagram

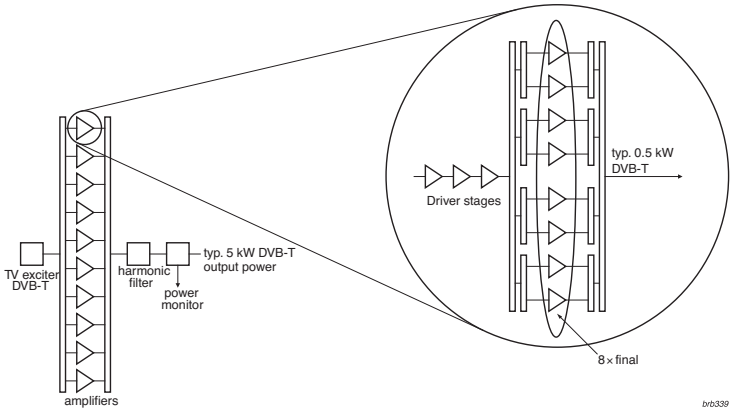

Recommended broadcast products

Function	Product	f_{min} (MHz)	f_{max} (MHz)	P1dB (W)	VDS (V)	η_D (%)	G_p (dB)	Test signal	Package	Type
HPA	Driver	10	500	20	50	70	27.5	CW	SOT467C	BLF571
		1	1400	35	32	63	19	CW	SOT467C	BLF642
	Final	1	1000	100	40	60	21	CW	SOT467	BLF871(S)
		1	1000	140	50	49	21	CW	SOT467	BLF881(S)
		10	1400	200	32	70	18	pulsed	SOT1121	BLF647P(S)*
		10	128	1200	50	75	28.5	pulsed	SOT539A	BLF178P
		470	860	500	42	47	21	CW	SOT539A	BLF879P
		470	860	300	50	46	21	CW	SOT1121	BLF884P(S)
		470	860	600	50	46	21	CW	SOT539	BLF888A(S)
		470	860	600	50	46	21	CW	SOT539	BLF888B(S)

Recommended ISM products

Function	Product	f_{min} (MHz)	f_{max} (MHz)	P1dB (W)	Matching	VDS (V)	η_D (%)	G_p (dB)	Test signal	Package	Type
HPA	Driver	1	2500	12	I	28	60	19	CW	SOT975	BLF25M612(G)*
	Final	10	128	600	-	50	75	28	pulsed	SOT539	BLF174XR(S)*
		10	128	1400	-	50	72	29	pulsed	SOT539	BLF178XR(S)
		10	500	200	-	50	70	24	pulsed	SOT1121	BLF572XR(S)*
		10	500	600	-	50	70	26	pulsed	SOT539	BLF574XR(S)*
		10	500	1400	-	50	69	23	pulsed	SOT539	BLF578XR(S)
		1300	1300	250	I	50	56	17	CW	SOT1121	BLF6G13L(S)-250P
		2400	2500	180	I/O	28	55	12	CW	SOT539	BLF2425M6L(S)180P*
		2400	2500	140	I/O	28	52	17.5	CW	SOT502	BLF2425M7L(S)140*
		2400	2500	200	I/O	28	52	15	CW	SOT502	BLF2425M7L(S)200*
		2400	2500	250	I/O	28	55	15	CW	SOT539	BLF2425M7L(S)250P*

* Check status in section 3.1, as this type is not yet released for mass production

Product highlight: BLF578XR Power LDMOS transistor

Designed for broadband operation, this 1400 W extremely rugged LDMOS power transistor supports broadcast and industrial applications in the HF to 500 MHz band. This product is an enhanced version of the BLF578. It uses NXP's XR process to provide maximum ruggedness capability in the most severe applications without compromising RF performance.

Features

- Output power = 1400 W
- Power gain = 23 dB
- High Efficiency = 69 %
- Integrated ESD protection
- Excellent ruggedness
- Excellent thermal stability

1.6.2 E-metering, RF generic front-end with a single antenna / ZigBee

Application diagram

Looking for a wireless microcontroller platform with chipsets, modules and supporting software? See section 2.5.6 Setting the benchmark for ultra low-power and high-performance wireless connectivity solutions.

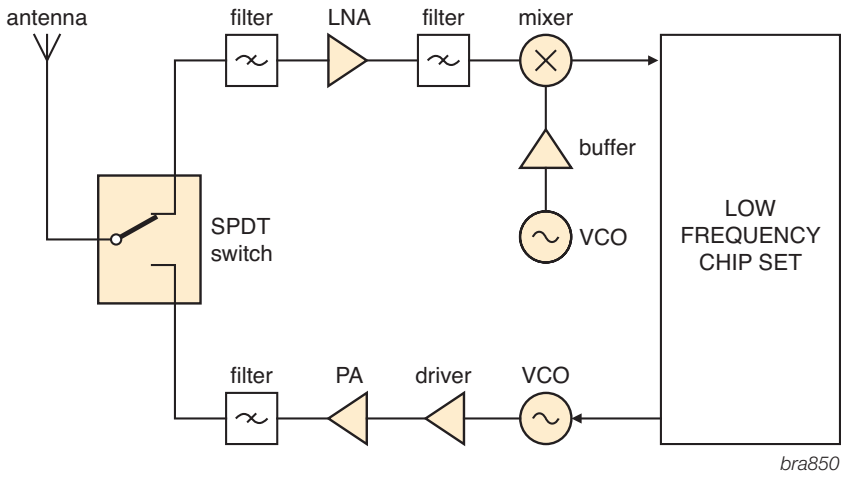

Recommended products

Function	Product		Package	Type
SPDT Switch	RF diode	Bandswitch diode	SOD523	BA277
			SOD323	BA591
		PIN diode	Various	BAP51^
			Various	BAP1321^

Function	Product		Package	Type
LNA	RF transistor	SiGe:C transistor	SOT343F	BFU610F
				BFU630F
				BFU660F
				BFU690F
				BFU710F
				BFU725F/N1
				BFU730F
				BFU760F
				BFU790F
	MMIC	SiGe:C MMIC	SOT886	BGU7003W

Function	Product		Package	Type
Driver	RF bipolar transistor	Wideband transistor	SOT343	BFG425W
	MMIC	Gen-purp wideband amp	SOT363	BGA2771
			SOT363	BGA2866

^ Also available in ultra-small leadless package SOD882D

Function	Product		Package	Type
Mixer	RF bipolar transistor	Wideband transistor	SOT343	BFG410W
			SOT343	BFG425W
			SOT343	BFG480W
	MMIC	Linear mixer	SOT363	BGA2022

Function	Product		Package	Type
Buffer	RF bipolar transistor	Wideband transistor	SOT23	PBR951
			SOT323	PRF957
			SOT323	PRF947
			SOT416	PRF949

Function	Product		Package	Type
Medium power amplifier	RF bipolar transistor	Wideband transistor	SOT343	BFG21W
	MMIC	General-purpose wideband amplifier	SOT89	BGA6289
				BGA6489
				BGA6589
			SOT908	BGA7124
			SOT908	BGA7127

Function	Product		Package	Type
VCO	Varicap diodes	VCO varicap diodes	SOD523	BB198
			SOD323	BB156

Product highlight:
BGA7127 MMIC medium power amplifier

The BGA7127 MMIC is a one-stage driver amplifier offered in a low-cost, ultra-small SOT908 leadless package. It delivers 27 dBm output power at 1 dB gain compression and superior performance for various narrowband-tuned application circuits at frequencies up to 2700 MHz.

Features

- Operating range: 400 to 2700 MHz
- 16 dB small signal gain at 2 GHz
- 27 dBm output power at 1 dB gain compression
- Integrated active biasing
- 3.3 / 5 V single-supply operation
- Simple quiescent current adjustment
- 1 µA shutdown mode

1.6.3 RF microwave furnace application

Application diagram

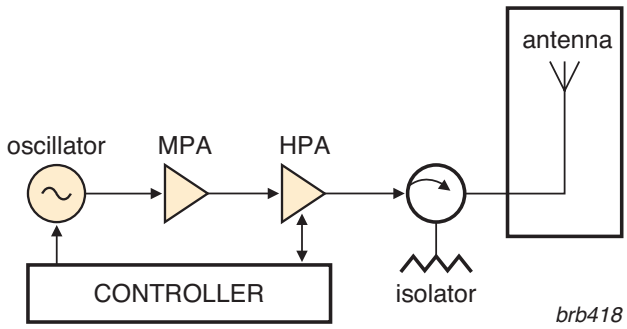

Recommended products

Function	Product	Package	Type
Oscillator	RF transistor	SOT343R	BFG410W
			BFG424W
			BFG425W
		SOT343F	BFG424F
			BFU610F
			BFU630F
			BFU660F
			BFU690F
			BFU710F
			BFU725F/N1
			BFU730F
			BFU760F
			BFU790F

Function	Product	Package	Type
MPA (medium power amplifier)	MMIC	SOT89	BGA6289
			BGA6489
			BGA6589
		SOT908	BGA7124
		SOT89	BGA7024
		SOT908	BGA7127
		SOT89	BGA7027
		SOT908	BGA7130

* Check status in section 3.1, as this type is not yet released for mass production

Function	Product	f_{min} (MHz)	f_{max} (MHz)	P1dB (W)	η_D (%)	G_p (dB)	test signal	Package	Type
HPA	Driver	1	2500	12	60	19	CW	SOT975	BLF25M612(G)
	Final	2400	2500	180	55	12	CW	SOT539	BLF2425M6L(S)180P
		2400	2500	140	52	17.5	CW	SOT502	BLF2425M7L(S)140*
		2400	2500	200	52	15	CW	SOT502	BLF2425M7L(S)200
		2400	2500	250	55	15	CW	SOT539	BLF2425M7L(S)250P*

Product highlight:
New family for ISM 2.45 GHz

NXP's 6th and 7th generation LDMOS technology, along with advanced packaging concepts, enables power amplifiers that deliver best-in-class performance at 2.45 GHz. The unsurpassed ruggedness and low thermal resistance, along with the intrinsic efficiency of the LDMOS process, make these transistors ideally suited for furnace applications.

Features
- Excellent ruggedness
- Consistent device performance
- Low thermal resistance for unrivalled reliability
- Ease of design

1.6.4 RF plasma lighting

Looking for more information on RF plasma lighting?
See section 2.5.2 RF-driven plasma lighting: The next revolution in light sources are powered by solid-state RF technology

Application diagram

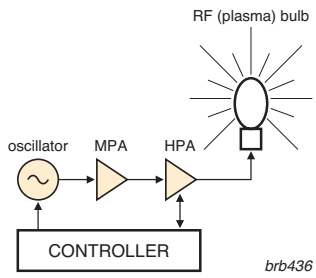

Recommended products

Function	Product	Package	Type
Oscillator	RF transistor	SOT143	BFG520
		SOT143	BFG325/XR
		SOT23	BFR520
		SOT323	BFR92AW
		SOT323	BFR93AW
		SOT323	BFS520
		SOT343	BFG520W
		SOT343	BFG325W/XR
		SOT363	BFM520
		SOT416	BFR520T

Function	Product	Package	Type
MPA (medium power amplifier)	MMIC	SOT89	BGA6289
			BGA6489
			BGA6589
		SOT908	BGA7124
		SOT89	BGA7024
		SOT908	BGA7127
		SOT89	BGA7027
		SOT908	BGA7130

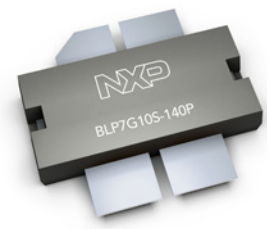

Function	Product	f_{min} (MHz)	f_{max} (MHz)	P1dB (W)	Package	Type
HPA	Driver	1	2500	12	SOT975	BLF25M612(G)*
		10	500	20	SOT467C	BLF571
	Final	1	1000	100	SOT467	BLF871(S)
		10	500	300	SOT502	BLF573(S)
		10	500	600	SOT539A	BLF574
		10	500	600	SOT539	BLF574XR(S)*
		10	500	1200	SOT539A	BLF578
		10	500	1400	SOT539	BLF578XR(S)
		688	1000	200	SOT502	BLF6G10(LS)-200RN
		700	1000	135	SOT502	BLF6G10(LS)-135RN
		700	1000	160	SOT502	BLF6G10(LS)-160RN
		2400	2500	180	SOT539	BLF2425M6L(S)180P*
		2400	2500	140	SOT502	BLF2425M7L(S)140
		2400	2500	200	SOT502	BLF2425M7L(S)200*
		2400	2500	250	SOT539	BLF2425M7L(S)250P

* Check status in section 3.1, as this type is not yet released for mass production

Product highlight: LDMOS enables RF lighting

NXP's 50 V high-voltage LDMOS process enables highest power at the extreme ruggedness levels necessary for this kind of application. BLF578: 1200 W CW operation - highest power LDMOS

Features

- Highest power device
- Unprecedented ruggedness
- Low thermal resistance for reliable operation
- Consistent device performance
- Broadband device for flexible use

1.6.5 Medical imaging

Looking for more information on medical applications?
See section 2.5.1 Medical applications driven by RF power: From imaging to cancer treatment, a flexible and versatile technology in the doctor's toolbox

Application diagram

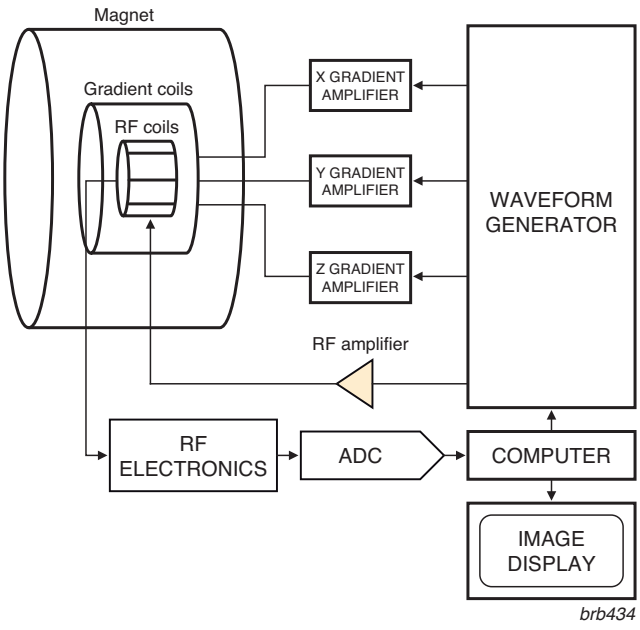

Recommended products

Function	Product	f_{min} (MHz)	f_{max} (MHz)	P1dB (W)	Package	Type
HPA	Driver	1	2500	12	SOT975	BLF25M612(G)*
		10	500	20	SOT467C	BLF571
	Final	1	1000	100	SOT467	BLF871(S)
		10	500	300	SOT502	BLF573(S)
		10	500	600	SOT539A	BLF574
		10	500	600	SOT539	BLF574XR(S)*
		10	500	1200	SOT539A	BLF578
		10	500	1400	SOT539	BLF578XR(S)
		688	1000	200	SOT502	BLF6G10(LS)-200RN
		700	1000	135	SOT502	BLF6G10(LS)-135RN
		700	1000	160	SOT502	BLF6G10(LS)-160RN
		2400	2500	140	SOT502	BLF2425M7L(S)140
		2400	2500	180	SOT539	BLF2425M6L(S)180P*
		2400	2500	200	SOT502	BLF2425M7L(S)200*
		2400	2500	250	SOT539	BLF2425M7L(S)250P

* Check status in section 3.1, as this type is not yet released for mass production

Product highlight:
LDMOS in emerging medical applications

NXP's line of 50 V high-voltage LDMOS devices enables highest power output and features unequalled ruggedness for pulsed operation in MRI and NMR applications. The high power densities enable compact amplifier design.

Features

- Best broadband efficiency
- Highest power (density) devices
- Unrivalled ruggedness
- Consistent device performance

1.7 Aerospace and defense

1.7.1 Microwave products for L- and S-band radar and avionics applications

Application diagram

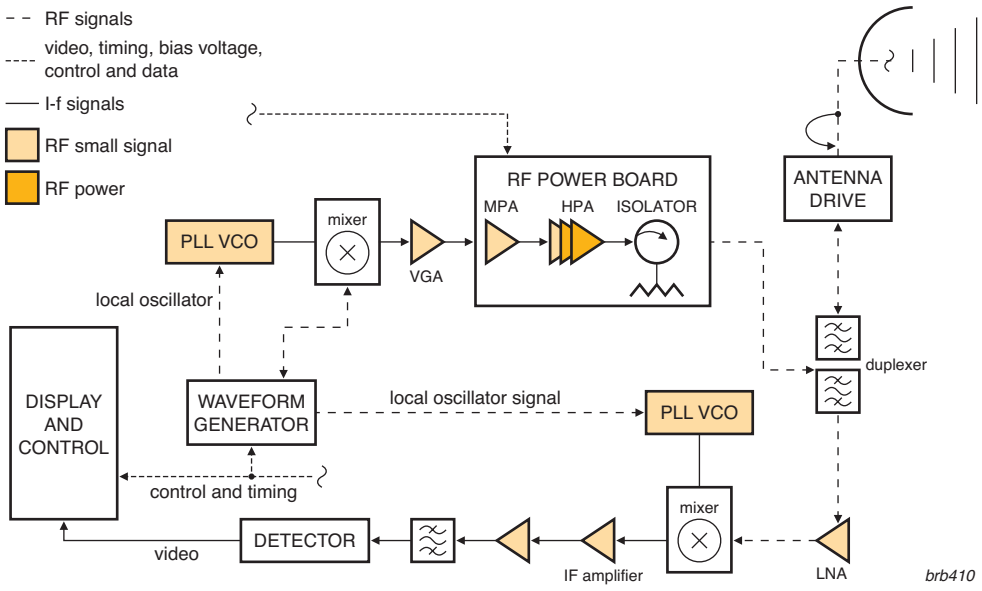

Recommended products

Function	Product	f_{min} (MHz)	f_{max} (MHz)	P1dB (W)	VDS (V)	η_D (%)	G_p (dB)	Package	Type
HPA	Driver	500	1400	25	50	50	19	SOT467C	BLL6H0514-25
		1030	1090	10	36	40	16	SOT467C	BLA1011-10
		1030	1090	2	36	-	16	SOT538A	BLA1011-2
		2700	3100	6	32	33	15	SOT975C	BLS6G2731-6G
		2700	3500	30	32	50	13	SOT1135	BLS6G2735L(S)-30
		3100	3500	20	32	45	15.5	SOT608	BLS6G3135(S)-20
	Final	400	1000	600	50	57	20	SOT539	BLU6H0410L(S)-600P
		500	1400	130	50	50	17	SOT1135	BLL6H0514L(S)-130
		960	1215	250	36	50	13.5	SOT502A	BLA0912-250R
		960	1215	500	50	50	17	SOT634A	BLA6H0912-500
		1030	1090	200	28	65	20	SOT502	BLA6G1011LS-200RG
		1030	1090	600	48	52	17	SOT539A	BLA6H1011-600
		1200	1400	250	36	45	15	SOT502A	BLL6G1214L-250
		1200	1400	500	50	50	17	SOT539A	BLL6H1214-500
		1200	1400	250	50	55	17	SOT502	BLL6H1214L(S)-250
		2700	3100	130	32	50	12	SOT922-1	BLS6G2731S-130
		2700	2900	350	32	50	13.5	SOT539	BLS7G2729L(S)-350P
		2900	3300	150	32	47	13.5	SOT922-1	BLS7G2933S-150
		3100	3500	120	32	43	11	SOT502	BLS6G3135(S)-120
		3100	3500	350	32	43	10	SOT539	BLS7G3135L(S)-350P*

* Check status in section 3.1, as this type is not yet released for mass production

Product highlight:
BLS7G2729L-350P LDMOS S-band radar power transistor

Designed for S-band operation (2.7 to 2.9 GHz), this internally matched LDMOS power transistor for rader applications delivers an output power of 350 W and a power gain of 13.5 dB at an efficiency of 50 %.

Features
- Easy power control
- Integrated ESD protection
- High flexibility with respect to pulse formats
- Excellent ruggedness
- Excellent thermal stability

Function	Product		Package	Type
LNA (low-noise amplifier) & Mixer	RF transistor	SiGe:C transistor	SOT343F	BFU710F BFU725F/N1 BFU730F

Function	Product		Package	Type
IF amplifier	MMIC	MMIC	SOT363	BGA2800 BGA2801 BGA2815 BGA2816 BGA2850 BGA2865 BGA2866
		General-purpose wideband amplifiers		BGM1014 BGM1013 BGM1012

Function	Product		Package	Type
PLL/VCO LO generator	RF IC	SiGe:C IC	SOT616	TFF1003HN TFF1007HN TFF11xxxHN^

Function	Product	Gain range	Package	Type
Single VGA (variable-gain amplifier)	MMIC	31 dB	SOT617	BGA7210 BGA7204

Function	Product	Gain range	Package	Type
Dual VGA (variable-gain amplifier)	MMIC	24 dB	SOT617	BGA7350
		28 dB		BGA7351

Function	Product	$P_{L(1\ dB)}$ @ 940 MHz	Package	Type
MPA (medium power amplifier)	MMIC	24 dBm	SOT89	BGA7024
		28 dBm		BGA7027
		25 dBm	SOT908	BGA7124
		28 dBm		BGA7127
		30 dBm		BGA7130

^ 17 different types with LO ranges: 7-15 GHz, see 3.4.4

Product highlight:
BGA28xx-family of IF gain blocks

The BGA28xx IF gain blocks are silicon Monolitic Microwave Integrated Circuit (MMIC) wideband amplifiers with internal matching circuitry in a 6-pin SOT363 plastic SMD package.

Features
- No output inductor necessary when used at the output stage
- Internally matched to 50 Ω
- Reverse isolation > 30 dB up to 2 GHz
- Good linearity with low second order

2. Focus applications, products & technologies

2.1 Wireless communication infrastructure

2.1.1 Build a highly efficient signal chain with RF components for transmit line-ups and receive chains

As a global leader in RF technology and component design, NXP Semiconductors offers a complete portfolio of RF products, from low- to high-power signal conditioning that delivers advanced performance and helps simplify your design and the development process. Our solutions range from discrete devices to modular building blocks, so you can design a highly efficient signal chain.

State-of-the-art QUBiC4

NXP's industry-leading QUBiC4 technology, available since 2002, has been widely deployed in the field and offers more consistent parameter performance compared to GaAs technology. It speeds the migration from GaAs to silicon and delivers more functionality in less space. High integration reduces the design footprint and enables more cost-competitive designs. It also improves reliability and offers significant savings in manufacturing expenditures.

Application diagram of base station (all cellular standards and frequencies)

The block diagram below shows base station transmit (upper part, Tx) and receive (lower part, Rx) functions, and includes the Tx feedback function (middle part, Tx feedback).

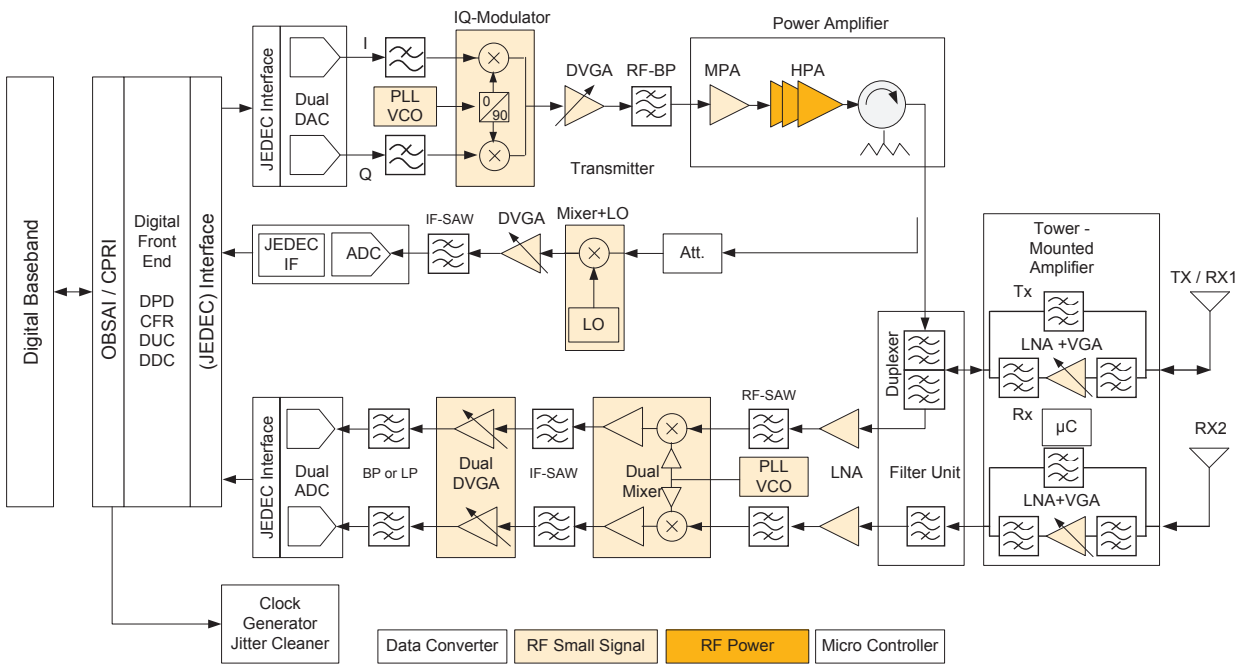

Digital wideband VGAs with high linearity & flexible current settings

These 6-bit digital VGAs (BGA7204 & BGA7210) offer high linearity (35 dBm @ 2.2-2.8 GHz) and high output power (23 dBm @ 2.2-2.8 GHz) across a large bandwidth without external matching. Smart routing with no connection crosses simplifies design and decreases footprint by 25%.

The unique power-save mode can effectively reduce the current consumption in TDD systems up to 45%. The BGA7210 adds flexible current distribution across its two amplifiers, depending on the attenuation state, to save current.

Dual digital IF VGAs

The BGA7350 and BGA7351 are dual, independently controlled receive IF VGAs that operate from 50 to 250 MHz. Integrated matching improves performance in the receiver chain, because the VGA can drive the filter directly into the analog-to-digital converter to ensure a constant input level. The BGA7350 has a gain range of 24 dB, while the BGA7351 has a range of 28 dB. For both devices, the maximum gain setting delivers at least 16 dBm output power at 1 dB gain compression (P1dB). For gain control, each amplifier uses a separate digital gain-control code, which is provided externally through two sets of five bits. The resulting gain flatness is 0.1 dB.

Medium power amplifier

The NXP MPAs (BGA7x2x/BGA7x3x) are based on a one-stage amplifier, available in a low-cost surface-mount package. It delivers a set of available output power from 24 to 30 dBm. All cover the frequency range from 400 to 2700 MHz.

Low-noise amplifiers up to 2.8 GHz

Designed for high linearity and low noise, these monolithic SiGe:C BiCMOS LNAs (BGU7051, BUG7052 & BGU7053) deliver 18-24 dB gain, 3-5 dB more gain than equivalents, along with low power consumption. The RF input power overdrive of 20 dBm and the high ESD protection (HBM 4 kV; CDM 2 kV) make these devices extremely rugged. Integrated biasing circuitry, 3.3 V supply voltage and low external component count (only 6 capacitors) ensures easy system integration.

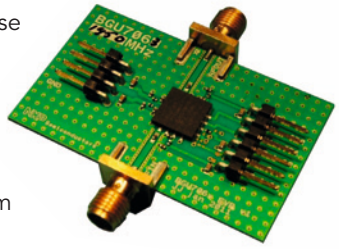

Integrated base station LNAs with lowest NF for the complete LNA chain

NXP provides the industry's only fully Integrated base station LNA that can be tailored to the needs of individual OEMs for optimal fit in their Rx line-ups. By integrating three stages in one monolithic design, these SiGe:C BiCMOS LNAs (BGU706x) deliver the industry's lowest noise figure for a receive chain (0.9 dB), while saving up to 80% in component cost. Additionally, the analog gain control up to 35 dB, RF input power overdrive of 10-15 dBm, and high linearity (0.9-2.5 dBm IP3I at maximum gain) make them very suitable in small cell sizes.

IQ modulators

The BGX7100 and BGX7101 devices combine high performance, high linearity I and Q modulation paths for use in radio frequency up-conversion. It supports RF frequency outputs in the range from 400 to 4000 MHz. The BGX710x IQ modulator is performance-independent of the IQ common mode voltage. The modulator provides a typical output 1 dB compression point (PL(1dB)) value of 12 dBm and a typical 27 dBm output third-order intercept point ($IP3_O$). Unadjusted sideband suppression and carrier feed through are 50 dBc and −45 dBm respectively. A hardware control pin provides a fast power-down/power-up mode functionality which allows significant power saving. The BGX7101 is 4 dB higher gain compared to the BGX7100.

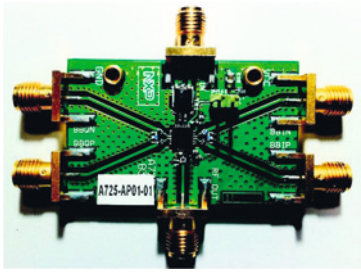

Dual mixers

The BGX722x device combines a pair of high-performance, high-linearity down-mixers for use in receivers having a common local oscillator (e.g. having main and diversity paths). Each mixer provides an input 1 dB compression point (P1dB) above 13 dBm, with an input third-order intercept point (IIP3) of 26 dBm. The small-signal noise figure (NF) is below 10 dB whereas under large signal blocking conditions the NF is typically 19 dB. Isolation between mixers is at least 40 dB.

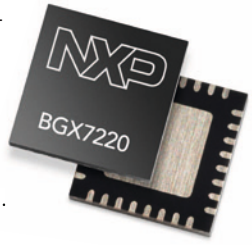

Synthesizer with an integrated VCO (LO generator)

The BGX7300 is a low phase noise wideband synthesizer with an integrated VCO which allows the implementation of an integer-N or fractional-N Phase-Locked Loop (PLL). The integrated voltage controlled oscillator (VCO) supports a fundamental frequency range from 2.2 GHz up to 4.4 GHz. The BGX7300 has dual differential RF outputs, each with output power up to +5 dBm. The VCO frequency can by divided by 1/2/4/8/16/32 before being fed to the RF outputs. Hence the generated output frequency can be as low as 68.75MHz. For isolation purpose, each RF output can be muted or forced into power-down mode using a hardware pin or SPI sofware control. A dedicated differential input stage lets the BGX7300 work with an external VCO. Most of the characteristics are programmable via a 3- or 4-wire Serial Peripheral Interface bus (SPI). Each VCO is powered from an internally regulated voltage source providing sufficient power supply rejection. The device is designed to operate from 3.3 V nominal supply voltage connected to the supply pins.

Selection guides of the listed components are available in Chapter 3 (3.4.1 & 3.4.2).

2.1.2 Digital wideband VGAs with high linearity & flexible current settings

NXP digital VGAs BGA7204 & BGA7210

These 6-bit digital VGAs offer high linearity (35 dBm @ 2.2-2.8 GHz) and high output power (23 dBm @ 2.2-2.8 GHz) across a large bandwidth without external matching. Smart routing with no connection crosses simplifies design and decreases footprint by 25%. The unique power-save mode can effectively reduce the current consumption in TDD systems up to 45%. The BGA7210 adds flexible current distribution across its two amplifiers, depending on the attenuation state, to save current.

Key features

- Internally matched for 50 Ω
  - BGA7204 = 0.4 to 2.75 GHz
  - BGA7210 = 0.7 to 3.8 GHz
- High maximum power gain
  - BGA7204 = 18.5 dB
  - BGA7210 = 30 dB
- High output third-order intercept, $IP3_O$
  - BGA7204 = 38 dBm
  - BGA7210 = 39 dBm
- Attenuation range of 31.5 dB, 0.5 dB step size (6 bit)
- High output power, $P_{L(1dB)}$
  - BGA7204 = 21 dBm
  - BGA7210 = 23 dBm
- Fast switching power-save mode (power down pin)
- Digitally controlled current setting from 120 to 195 mA with an optimum at 185mA (BGA7210 only)
- Simple control interfaces
  - BGA7204 SPI and parallel
  - BGA7210 SPI
- ESD protection on all pins (HBM 4 kV; CDM 2 kV)
- HVQFN32 (5 x 5 x 0.85 mm)

Key benefits

- Wideband operation supports platforms with multiple frequency ranges
- Smart lead routing produces simpler design, decreases footprint by 25%
- Power-save mode can reduce current consumption in TDD systems up to 45%
- Flexible current setting (BGA7210) saves power
- Monolithic design enables high quality

Applications

- GSM, W-CDMA, WiMAX, LTE base stations
- Wireless point-to-point and repeaters
- Cable modem termination systems
- Temperature-compensation circuits

OM7921 – BGA7210 customer evaluation kit (also available OM7922 – BGA7204 CEK)

The NXP BGA7204 and BGA7210 are monolithic digital variable-gain amplifiers (VGAs) that operate over an extremely wide range with high linearity and high output power.

Designed for the transmit path of wireless architectures, these VGAs can be used to control the power level to the power amplifier. The up-converted signals are fed to the VGA, and thus help compensate for variations in cell load and the presence of aging infrastructure equipment.

The BGA7204 operates in the range between 0.4 and 2.75 GHz, while the BGA7210 operates between 0.7 and 3.8 GHz. By supporting more than 2 GHz of bandwidth, these devices can be used to populate several frequency bands.

An integrated power-save mode makes it possible to reduce consumption even more, to just 15 mA during a receive slot. This can effectively reduce the current consumption in Time Division Duplexing (TDD) systems up to 45%.

The BGA7210 builds on the BGA7204 by adding flexible current setting across its two amplifiers, depending on the attenuation state. The serial peripheral interface is used to set the attenuation state, and, using a similar method, to set the current through the first and second amplifiers. The desired configuration is set by software and enables current savings of as much as 75 mA.

Higher output power, higher peak gain, and smaller attenuator step sizes enable engineers to use fewer components and provide greater control to maintain and optimize performance in the transmit chain.

Smart routing (with no connection crosses) reduces the number of board connections, simplifies design-in, and decreases the design footprint by 25%. The monolithic design increases reliability and ensures high quality.

Schematic of BGA7210 evaluation board (OM7921)

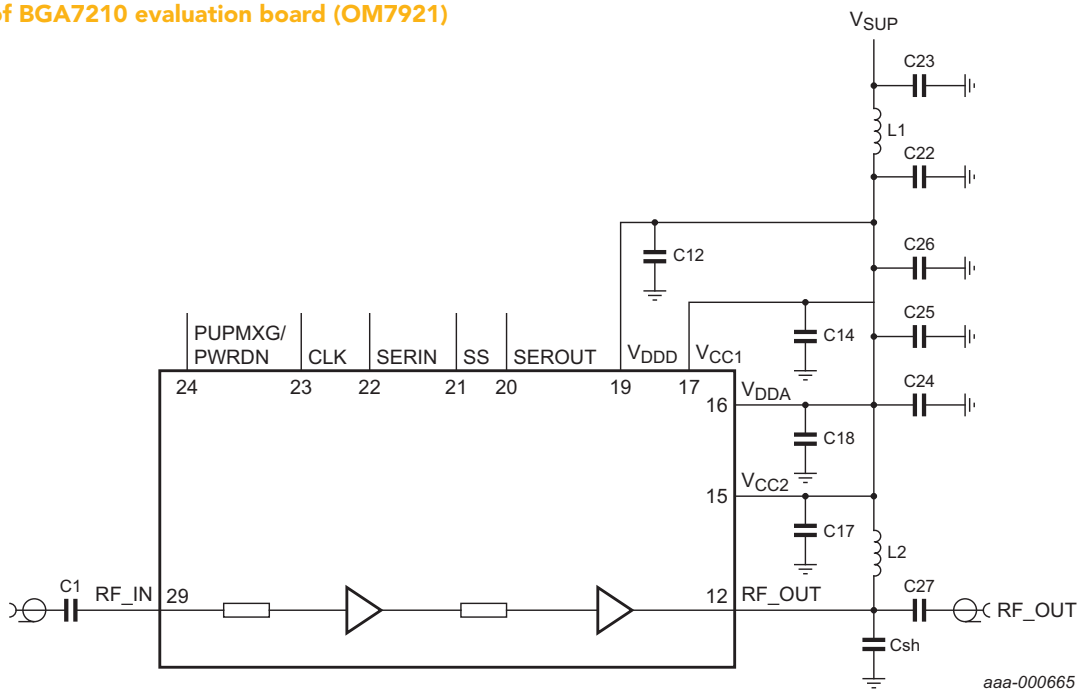

Digital VGAs

Type number	Package	f_{range} [min] (MHz)	f_{range} [max] (MHz)	@ V_{CC} (V)	@ I_{CC} [typ] (mA)	G_p @ minimum attenuation (dB)	Attenuation range (dB)	$IP3_O$ [typ] (dBm)	$P_{L(1dB)}$ [typ] (dBm)	NF [typ] (dB)
BGA7204	SOT617-3	400	700	5	115	18.5	31.5	38.0	21.0	7.0
		700	1450	5	115	18.5	31.5	37.5	21.0	6.5
		1450	2100	5	115	17.5	30.5	36.0	20.5	6.5
		2100	2750	5	115	16.5	30.0	34.0	20.0	7.0
BGA7210	SOT617-3	700	1400	5	185	30.0	31.5	39.0	21.0	6.5
		1400	1700	5	185	29.5	31.5	37.0	21.0	6.5
		1700	2200	5	185	29.0	31.5	35.0	21.0	6.5
		2200	2800	5	185	28.0	30.5	35.0	23.0	7.0
		3400	3800	5	185	26.0	29.5	27.0	19.0	8.0

2.1.3 Doherty amplifier technology for state-of-the-art wireless infrastructure

Best-in-class PA designs enable considerable energy savings

NXP's latest power amplifier designs let the wireless infrastructure run with significantly higher energy efficiency – towards "Green Base Stations". In order to achieve the highest efficiencies currently possible, NXP combines its latest generations of LDMOS technology (Gen7 & 8) with the Doherty concept. The high performance of our LDMOS technology, matched with the efficiency of the Doherty technology, creates power amplifiers that offer high efficiency and high gain, are easily linearizable, and are more cost-effective to operate.

Developed by W.H. Doherty in 1936, the Doherty amplifier remained largely unused because the dominant mobile communication system modulation techniques (FM, GMSK, and EDGE) did not require high peak-to-average ratio (PAR) signals. For today's base stations, however, transmitting 3G, 4G, and multi-carrier signals makes the high power and added efficiency of the Doherty approach the preferred option for most service providers.

NXP's Doherty designs ensure high efficiency while maintaining a very similar peak power capability of two transistors combined. The input and output sections are internally matched, benefiting the amplifiers with high gain, good gain flatness, and phase linearity over a wide frequency band.

Integrated Doherty

NXP offers the world's first fully integrated Doherty designs. From the outside these devices look like ordinary transistors. In fact, they are completely integrated Doherty amplifiers that readily deliver the associated high efficiency levels for base station applications. With the ease of design-in of an ordinary Class AB transistor, they also provide significant space and cost savings.

Key features & benefits

- Contains splitter, main and peak amplifier, delay lines, and combiner in one package
  - 40% efficiency @ 10 W average power
  - No additional tuning in manufacturing
- Design is as easy as with a single Class AB transistor
- Ideally suited for space-constrained applications (e.g. remote radio heads, antenna arrays)
- Currently available for TD-SCDMA (BLD6G21L(S)-50) and W-CDMA (BLD22L(S)-50); see section 3.7.1.4 for details

Discrete Doherty amplifiers

In addition to the integrated versions, NXP offers product demonstrators for very efficient, high-power, discrete two- and three-way Doherty amplifiers. The two-way designs, based on the BLF7G22LS-130 device, deliver 47.0 dBm (50 W) with 43% efficiency and 15.7 dB gain for W-CDMA applications.

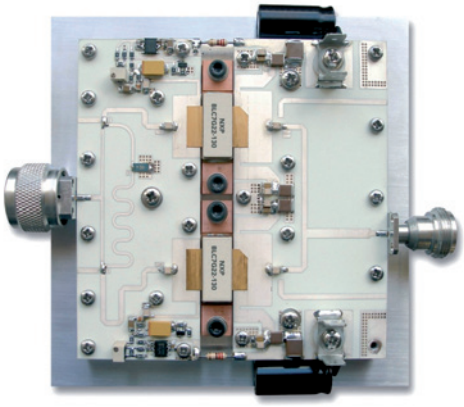

Our flagship three-way Doherty demonstrator achieves 48% efficiency at 48 dBm (63 W) average output power and 15.0 dB gain with a two-carrier W-CDMA signal. The current design covers the W-CDMA standard for band 1 operation and is tailored towards high-yield, minimum-tuning, volume manufacturing.

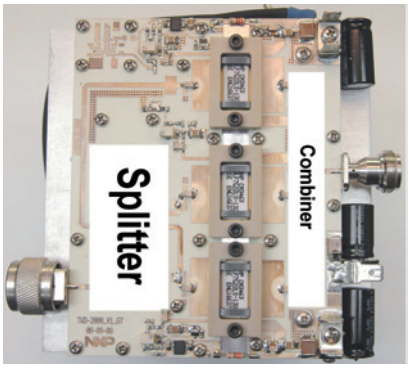

Key features & benefits

- Most efficient Doherty amplifier designs available to date
- Production-proven, consistent designs
- NXP's LDMOS provides unsurpassed ruggedness
- Currently available for the following frequency bands:
  - 728 to 821 MHz
  - 869 to 960 MHz
  - 1805 to 1880 MHz (DCS)
  - 1930 to 1990 MHz (PCS)
  - 1880 to 2025 MHz (TD-SCDMA)
  - 2110 to 2170 MHz (UMTS / LTE)
  - 2300 to 2400 MHz (WiBRO / LTE)
  - 2500 to 2700 MHz (WiMAX / LTE)
  - 3300 to 3800 MHz (WiMAX)

All of our product demonstrators are supported by comprehensive documentation and hardware.
Please see section 3.7.1.8 for a complete list of available designs.

Power LDMOS Doherty designs

Freq band (MHz)	PPEAK (dBm)	POUT-AVG (dBm)	VDS (V)	Gain (dB)	Drain Eff. (%)	Type	Main transistor	Peak transistor
869-894	59.2	50.4	28	16	52	3-WAY	BLF7G10LS-250	2x BLF7G10LS-250
920-960	57.3	49.3	30	16	50	ASYM	BLF8G10LS-160	BLF7G10LS-250
1526-1555	56.6	48.6	28	18.4	42	SYM	BLF7G15LS-200	BLF7G15LS-200
1805-1880	58.6	51	28	16	47.6	3-WAY	BLF7G20LS-200	2x BLF7G20LS-200
1930-1990	58.2	50	28	16	40	SYM	BLF7G20LS-250P	BLF7G20LS-250P
2010-2025	52.2	44	28	15.6	43	SYM	1/2 BLF7G21LS-160P	1/2 BLF7G21LS-160P
2110-2170	56.5	49	28	14.2	46	ASYM	BLF7G22LS-160	BLF7G22LS-200
2110-2170	57.2	49.2	28	16	47	3-WAY	BLF7G22LS-160	2x BLF7G22L(S)-160
2300-2400	56.8	48.5	30	15	42	3-WAY	BLF7G24LS-100	2x BLF7G24LS-100
2620-2690	55.2	47.2	30	15	41	ASYM	BLF7G27LS-100	BLF7G27LS-140

2.1.4 The new generation of LDMOS RF power for wireless infrastructures: NXP's Gen8

NXP announced last year the 8th generation of its renowned RF power device portfolio for base stations. Listening carefully to the world's leading infrastructure providers and understanding their requirements, we took a holistic approach to the development of Gen8. This means that we scrutinized every detail of a power transistor and reconsidered the entire "transistor system" to ceate a new generation that performs markedly better than its predecessors, and its competitors, and again sets standards for the industry.

Gen8 addresses the key trends in the wireless infrastructure industry

- Increasing signal bandwidths up to 100 MHz to enable full-band operation
- Cost sensitivity: peak powers up to 270 Watts in SOT502-sized packages
- Reduction in the size/weight/volume of the cabinet
- The ongoing need for greater electrical efficiency to reduce cooling requirements and operational expenditures
- Ever-increasing output power
- The need to deploy multi-standard and future-proof solutions

Gen8 is the answer to all these often conflicting requirements. The package and die design, as well as the input and output match structures, have been optimized to enable wideband, affordable, compact, multi-standard, and highly efficient Doherty power amplifiers. Solutions for all cellular frequency bands are currently being sampled and are in production or will be released throughout 2012.

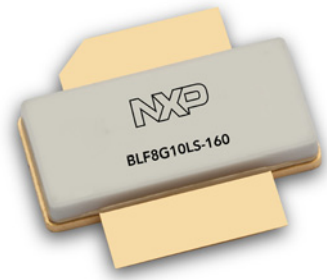

The first wave of Gen8 transistors

Type	f_{min} (MHz)	f_{max} (MHz)	P1dB (W)	Matching	Package	Planned release	Description
BLF8G10L(S)-160	920	960	160	I/O	SOT502	Released	Gen8 ceramic LDMOS transistor for GSM, WCDMA & LTE applications
BLF8G10L(S)-160V	700	1000	160	I/O	SOT1244	Released	Gen8 ceramic LDMOS transistor for GSM, WCDMA & LTE applications
BLF8G10LS-200GV	700	1000	200	I/O	SOT1244C	Q412	Gen8 ceramic LDMOS transistor for GSM, WCDMA & LTE applications (gull-wing)
BLF8G10LS-270GV	700	1000	270	I/O	SOT1244C	Q412	Gen8 ceramic LDMOS transistor for GSM, WCDMA & LTE applications (gull-wing)
BLF8G10L(S)-300P	850	960	300	I/O	SOT539	Q312	Gen8 ceramic push-pull LDMOS transistor for GSM, WCDMA & LTE applications (gull-wing)
BLF8G10LS-400PGV	700	1000	400	I/O	SOT1242C	Q412	Gen8 ceramic push-pull LDMOS transistor for GSM, WCDMA & LTE applications (gull-wing)
BLF8G20L(S)-200V	1800	2000	200	I/O	SOT1120	Released	Gen8 ceramic LDMOS transistor for GSM & LTE applications
BLF8G20LS-270GV	1800	2000	270	I/O	SOT1244C	Q412	Gen8 ceramic LDMOS transistor for GSM & LTE applications (gull-wing)
BLF8G20LS-270PGV	1800	2000	270	I/O	SOT1242C	Q412	Gen8 ceramic push-pull LDMOS transistor for GSM & LTE applications (gull-wing)
BLF8G22LS-160BV	2000	2200	160	I/O	SOT1120B	Released	Gen8 ceramic LDMOS transistor for WCDMA & LTE applications
BLF8G22LS-200GV	2000	2200	200	I/O	SOT1244C	Q312	Gen8 ceramic LDMOS transistor for WCDMA & LTE applications (gull-wing)
BLF8G22LS-270GV	2000	2200	270	I/O	SOT1244C	Q312	Gen8 ceramic LDMOS transistor for WCDMA & LTE applications (gull-wing)
BLF8G22LS-400PGV	2000	2200	400	I/O	SOT1242C	Q312	Gen8 ceramic push-pull LDMOS transistor for WCDMA & LTE applications (gull-wing)
BLF8G24L(S)-200P	2300	2400	200	I/O	SOT539	Q312	Gen8 ceramic push-pull LDMOS transistor for WCDMA & LTE applications
BLF8G27LS-140G	2500	2700	140	I/O	SOT502E	Q412	Gen8 ceramic LDMOS transistor for WCDMA & LTE applications (gull-wing)
BLF8G27LS-140V	2600	2700	140	I/O	SOT1244B	Q412	Gen8 ceramic LDMOS transistor for WCDMA & LTE applications
BLF8G27LS-200PGV	2500	2700	200	I/O	SOT1242C	Q412	Gen8 ceramic push-pull LDMOS transistor for WCDMA & LTE applications (gull-wing)
BLF8G27LS-280PGV	2500	2700	280	I/O	SOT1242C	Q412	Gen8 ceramic push-pull LDMOS transistor for WCDMA & LTE applications (gull-wing)

Note: All devices are internally matched (I/O)

2.2 Broadband communication infrastructure

2.2.1 Connecting people, protecting your network: NXP's CATV C-family for the Chinese SARFT standard

Specially designed for the Chinese Hybrid Fiber Coax (HFC) infrastructure, NXP's CATV C-family offers a total solution for cable TV networks. It is both flexible enough for connecting rural communities as part of China's "Connecting to Every Village" program and powerful enough for upgrading major cities from analog to high-end digital services. All C-type devices are compliant with the Chinese State Administration for Radio, Film and Television (SARFT) standard, and cover most HFC applications in the 550 MHz to 1 GHz range.

Products

- BGY588C, BGE788C and CGY888C push-pull amplifiers
- BGD712C, CGD944C, CGD942C, CGD982HCi, CGD985HCi and CGD987HCi power doublers
- BGO807C, BGO807CE optical receivers

Benefits

- Compliant with Chinese SARFT HFC networks standard
- Transparent cap allows confirmation of product authenticity
- Rugged construction
- Highest by Design internal ESD protection

Features

- Excellent linearity, stability, and reliability
- High power gain
- Extremely low noise
- Silicon nitride passivity
- GaAs HFET dies for high-end devices

The BGY588C, BGE788C and BGD712C devices cover the frequency range from 550 MHz to 750 MHz. Extending the C-family portfolio into the high-end segment, the CGD944C, CGD942C, CGY888C and BGO807C operate between 40 and 870 MHz and have been specifically tested under Chinese raster conditions. Manufactured using our GaAs HFET die process, the CGD942C and CGD944C are high-gain, high-performance 870 MHz power doublers. The CGD982HCi, CGD985HCi and CGD987HCi operate from 40 to 1003 MHz and are specified for 870 MHz and 1 GHz. These power doublers are optimized for the Chinese SARFT standard. They are capable of satisfying the demanding requirements of top-end applications, including high-power optical nodes.

Our GaAs HFET MMIC dies are designed to provide the best ESD protection levels, without the external TVS components normally used with GaAs pHEMT devices.

All CATV C-type devices feature a transparent cap that makes it easy to distinguish them from counterfeit products.

C-family application information

NXP C-family by application

Application	BGY588C	BGE788C	CGY888C	BGD712C	BGO807C BGO807CE	CGD942C CGD944C	CGD982HCi CGD985HCi CGD987HCi
Optical node				•	•	•	•
Optical receiver				•	•	•	•
Distribution amplifier			•	•		•	•
Line-extender amplifier			•	•		•	•
Terminating amplifier	•	•	•				

BGY588C, BGE788C, and CGY888C

The last stage of an HFC network structure is called a 'terminating amplifier' or, since it's close to the subscriber, a "user amplifier." terminating amplifier requires a single module such as the BGY588C for 550 MHz, the BGE788C for 750 MHz and the CGY888C for 870 MHz systems. These modules fit perfectly in the Chinese "Connecting to Every Village" projects.

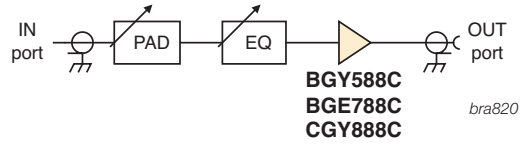

BGD712C

The BGD712C is a 750 MHz, 18 dB power doubler module. It has been designed for 750 MHz optical nodes including ordinary or optical receivers and distribution amplifiers. It can also be used in line-extender amplifiers together with a 750 MHz push-pull module, such as the BGY785A or the BGY787. As such it can be used widely in Chinese "Connecting to Every Village" projects.

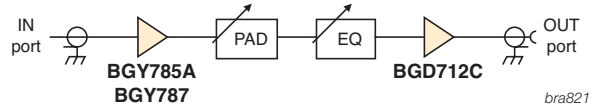

CGD944C and CGD942C

Our full GaAs power doubler modules, the CGD942C and the CGD944C offer high output power and better CTB and CSO than other modules. Designed for high-end HFC networks containing optical nodes with multiple out-ports, these modules enable each port to directly cover at least 125 subscribers. These two devices are ideal when used in upgrading HFC networks to 870 MHz.

CGD982HCi, CGD985HCi, and CGD987HCi

Our newest GaAs power doubler modules, the CGD982HCi, the CGD985HCi and the CGD987HCi are customized designs for CATV hybrid fiber coax Chinese networks operating in the 40 to 1003 MHz bandwidth, and specified with the Chinese cable TV network official loading raster on top of the traditional NTSC loading rasters. For use in optical notes for fiber deep applications where the output power level needs to be at its highest.

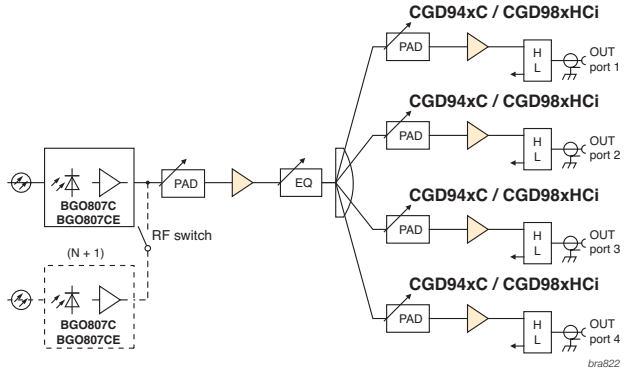

BGO807C

The BGO807C is an integrated optical receiver module that provides high output levels with integrated temperature-compensated circuitry. In an optical node design, the BGO807C enables a high performance / price ratio and ruggedness. When upgrading an HFC network from analog to digital, the BGO807C is the perfect fit.

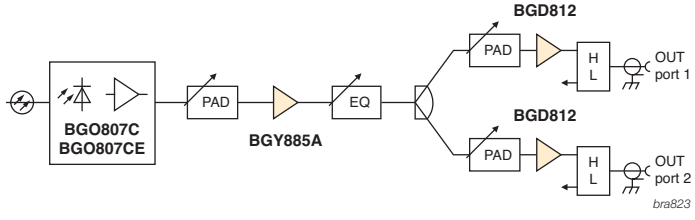

NXP CATV C-family for the Chinese SARFT standard

Push-pull amplifiers

Parameters		BGY588C	BGE788C	CGY888C
Power gain (dB)	Typ	34.5	34.2	35.5
Slope cable equivalent (dB)	Range	0.2 - 1.7	0.3 - 2.3	1.5 typ.
Composite triple beat (dB)	Max	-57	-49	-68 typ.
Composite 2nd order distortion (dB)	Max	-62	-52	-66 typ.
Noise (@ f_{max}) (dB)	Max	8	8	4 typ.
Total current consumption (mA)	Typ	325	305	280
Frequency range (MHz)	Range	40 - 550	40 - 750	40 - 870

Power doublers

Parameters		BGD712C	CGD942C	CGD944C	CGD982HCi	CGD985HCi	CGD987HCi
Power gain (dB)	Typ	18.5	23	25	23	24.5	27
Slope cable equivalent (dB)	Range	0.5 - 1.5	1 - 2	1 - 2	0.5 - 2	0.5 - 2	0.7 - 2
Composite triple beat (dB)	Max	-62	-66 typ.	-66 typ.	-66	-66	-66
Composite 2nd order distortion (dB)	Max	-63	-66 typ.	-66 typ.	-69	-69	-66
Noise (@ f_{max}) (dB)	Max	7	5	5	5.5	5.5	5.5
Total current consumption (mA)	Typ	395	450	450	440	440	440
Frequency range (MHz)	Range	40 - 750	40 - 870	40 - 870	40 - 1003	40 - 1003	40 - 1003

Optical receiver

Parameters		BGO807C	BGO807CE
Responsivity (R_{min})	Min	800	800
Slope cable equivalent (dB)	Range	0 - 2	0 - 2
Composite triple beat (dB)	Max	-71	-69
Composite 2nd order distortion (dB)	Typ	-54	-53
Noise (@ f_{max}) (dB)	Max	8.5	8.5
Total current consumption (mA)	Typ	190	190
Frequency range (MHz)	Range	40 - 870	40 - 870
Connector		- / SC0 / FC0	

2.2.2 Highly efficient line-up of 1 GHz GaAs modules for sustainable CATV networks

NXP high gain power doublers CGD104xHi and push-pulls CGY104

Designed for 1 GHz "sustainable networks," these high-performance GaAs devices enable extended bandwidth and higher data rates. They deliver increased network capacity and make way for high-end services like HDTV, VoIP, and digital simulcasting.

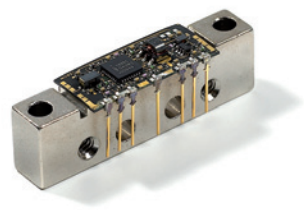

New CATV GaAs platform layout

Key features

- Excellent linearity, stability, and reliability
- High power gain for power doublers
- Extremely low noise
- Dark Green products
- GaAs HFET dies for high-end applications
- Rugged construction
- Superior levels of ESD protection
- Integrated ringwave protection
- Design optimized for digital channel loading
- Temperature compensated gain response
- Optimized heat management
- Excellent temperature resistance

Key benefits

- Simple upgrade to 1-GHz capable networks
- Low total cost of ownership
- High power-stress capability
- Highly automated assembly

Key applications

- Hybrid Fiber Coax (HFC) applications
- Line extenders
- Trunk amplifiers
- Fiber deep-optical-node (N+0/1/2)
- Bridgers

The NXP power doublers CGD104xH and CGD104xHi are ideal for use in line extenders and trunk amplifiers. They support fiber deep-optical-node applications (N+0/1/2), delivering the highest output power on the market today. The GaAs HFET die process delivers high gain, excellent CTB and CSO ratings, and lower current.

The new NXP CGY104x push-pull family is the first line-up on the market to combine very low noise, best-in-class distortion parameters, and low, "carbon footprint" capabilities. It delivers the best performance for the lowest power consumption, so it reduces OPEX and CO_2 emissions

All of NXP's 1 GHz solutions are designed for durability and offer superior ruggedness, an extended temperature range, high-power overstress capabilities, and extremely high ESD levels. As a result, they also reduce the cost of ownership.

The GaAs die is inserted in an HVQFN package that is then mounted on thermal vias that manage heat transfer to the heat sink. Temperature-control circuitry keeps the module's high performance stable over a wide range of temperature. Assembly is fully automated and requires almost no human intervention, so repeatability remains very high.

Upcoming products

Additional push-pulls, currently under development, will extend the capabilities of the power doublers even further, supporting almost all modern HFC applications. The push-pull CGY1041 will deliver a gain of 21 dB, the CGY1043 a gain of 23 dB, the CGY1049 a gain of 29 dB and the CGY1032 a gain of 32 dB. NXP is also developing a new, highly integrated power doubler. The CGD1046Hi will deliver, in one IC, a 26 dB power gain with 60 dBmV output power and excellent ESD protection, for the ultimate in high-quality, distortionless devices.

CATV 1 GHz power doublers

		CATV 1 GHz power doublers					
Parameters		CGD1040Hi	CGD1042H	CGD1042Hi	CGD1044H	CGD1044Hi	CGD1046Hi
Power gain (dB)	Typ	21	23	23	25	25	27
Slope cable equivalent (dB)	Typ	1.5	1.5	1.5	1	1.5	0.5 - 2.0
Composite triple beat (dB)	Typ	-69	-69	-69	-69	-69	-73
Composite 2nd order distortion (dB)	Typ	-68	-68	-68	-68	-68	-68
Noise (@ f_{max}) (dB)	Max	6	6	6	6	6	5
Total current consumption (mA)	Typ	440	450	440	450	440	460
Frequency range (MHz)	Range	40 - 1003	40 - 1003	40 - 1003	40 - 1003	40 - 1003	40 - 1003

CATV 1 GHz push-pulls

		CATV 1 GHz push-pulls				
Parameters		CGY1041	CGY1043	CGY1047	CGY1049	CGY1032
Power gain (dB)	Typ	22	24	28	30	33
Slope cable equivalent (dB)	Typ	2	2	2	1.6	1.8
Composite triple beat (dB)	Typ	-62	-62	-64	-62	-62
Composite 2nd order distortion (dB)	Typ	-64	-64	-66	-64	-64
Noise (@ f_{max}) (dB)	Max	5	5	4.5	5	5
Total current consumption (mA)	Typ	250	250	250	250	265
Frequency range (MHz)	Range	40 - 1003	40 - 1003	40 - 1003	40 - 1003	40 - 1003

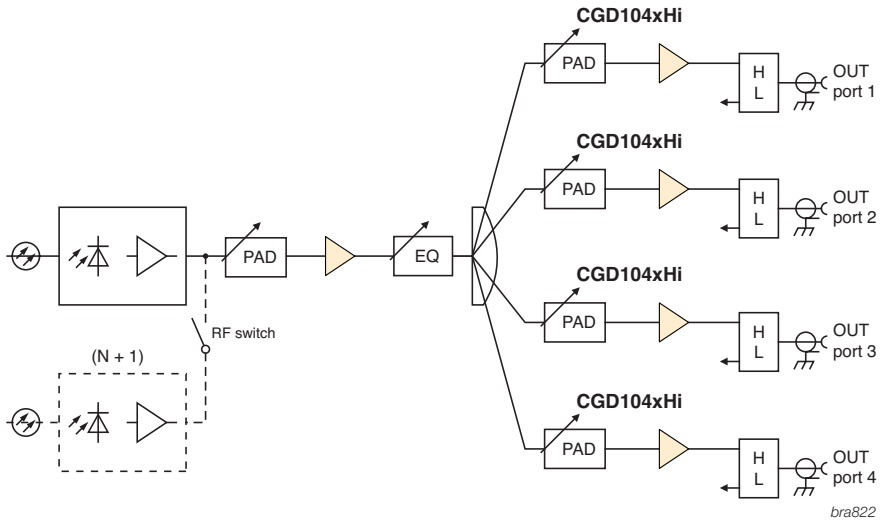

An optical node with multiple out-ports using the CGD1040Hi / CGD1042Hi / CGD1044Hi / CGD1046Hi

2.3 TV and satellite

2.3.1 LNAs with programmable gain & bypass option for improved tuner performance

NXP LNAs BGU703x &BGU704x for TVs/STBs

Designed for high linearity and low noise, these 3.3 and 5 V wideband LNAs support multi-tuner applications in TVs, DVR/PVRs, and STBs operating between 40 MHz and 1 GHZ. A unique programmable gain with bypass mode compensates for tuner switch signal loss (important in multi-tuner systems), and improves overall system performance by 7 to 10 dB.

Key features

- Internally biased
- Fixed G_p = 10 dB: BGU7031 (5 V), BGU7041 (3.3 V), and Fixed G_p = 14 dB: BGU7044 (3.3 V)
- Programmable between G_p = 10 dB and bypass: BGU7032 (5 V), BGU7042 (3.3 V), and programmable between G_p = 14 dB and bypass: BGU7045 (3.3 V)
- Programmable between G_p = 10 dB, 5 dB and bypass: BGU7033 (5 V)
- Flat gain between 40 MHz and 1 GHz
- Output power at 1 dB gain compression ($P_{L(1\ dB)}$) ranging from 9 to 14 dBm
- Noise figure as low as 2.8 dB
- High linearity with an OIP3 of 29 dBm
- 75 Ω input and output impedance
- Power-down during bypass mode
- ESD protection >2 kV HBM, >1.5 kV CDM on all pins

Key trends

- Multiple tuners in TV, DVR/PVR, and set-top box applications, requiring improved signal handling
- Use of 3.3 V Si tuner ICs, perfect match with our 3.3 V LNAs (BGU704x)

Applications

- Terrestrial and cable set-top boxes (STBs)
- Silicon and can tuners
- Personal and digital video recorders (PVRs and DVRs)
- Home networking and in-house signal distribution

NXP's BGU703x and BGU704x low-noise amplifiers (LNAs) upgrade overall picture quality with improved signal handling (NF, dynamic range), while reducing the number of external components.

Produced in NXP's own QUBiC4+ Si BiCMOS process, they improve signal handling by compensating for the signal loss at the tuner switch. This can improve system performance by as much as 7 to 10 dB.

The BGU7031, BGU7041, and BGU7044 are LNAs with fixed gain. The BGU7032, BGU7042, and BGU7045 have an additional bypass mode, and the BGU7033 adds two gain levels along with the bypass mode. In bypass mode, the devices consume less than 5 mA of current. Integrated biasing and 75 Ω matching reduces footprint by eliminating as many as 15 components compared to discrete solutions.

All the devices can be used with discrete or Si can tuners, as well as with on-board tuners. They deliver more robust ESD performance compared to GaAs solutions, withstanding >2 kV human body model (HBM) and >1.5 kV charged device model (CDM).

BGU703x evaluation board

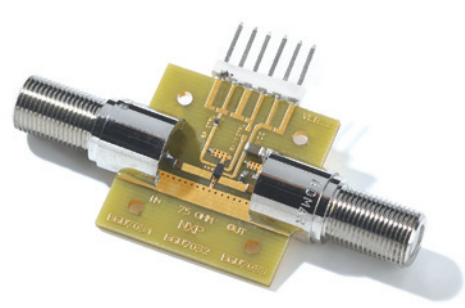

LNAs for set-top boxes (75 Ω)

Type	Package	Frequency range (MHz)	Mode	@ V_{CC} (V)	@ I_{CC} (mA)	Gain [1] (dB)	NF (dB)	$P_{L(1dB)}$ (dBm)	OIP3 (dBm)	FL [2] (dB)	RL_{out} (dB)	RL_{in} (dB)
BGU7031	SOT363	40 - 1000	G_p 10 dB	5	43	10	4.5	14	29	-0.2	12	18
BGU7032	SOT363	40 - 1000	G_p 10 dB	5	43	10	4.5	14	29	-0.2	12	18
			Bypass	5	4	-2	2.5	-	29	-0.2	8	8
BGU7033	SOT363	40 - 1000	G_p 10 dB	5	43	10	4.5	14	29	-0.2	12	18
			G_p 5 dB	5	43	5	6	9	29	-0.2	12	17
			Bypass	5	4	-2	2.5	-	29	-0.2	8	8
BGU7041	SOT363	40 - 1000	G_p 10 dB	3.3	38	10	4	12	29	-0.2	12	21
BGU7042	SOT363	40 - 1000	G_p 10 dB	3.3	38	10	4	12	29	-0.2	12	21
			Bypass	3.3	3	-2	2.5	-	29	-0.2	10	10
BGU7044	SOT363	40 - 1000	G_p 14 dB	3.3	34	14	2.8	13	29	-0.2	12	20
BGU7045	SOT363	40 - 1000	G_p 14 dB	3.3	34	14	2.8	13	29	-0.2	12	20
			Bypass	3.3	3	-2	2.5	-	27	-0.2	10	9

Block diagram

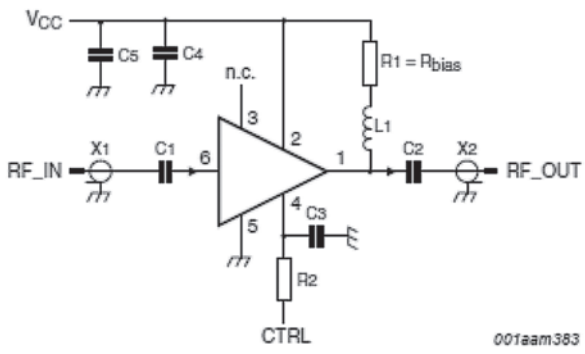

Application diagram of an active splitter with passive loop-through

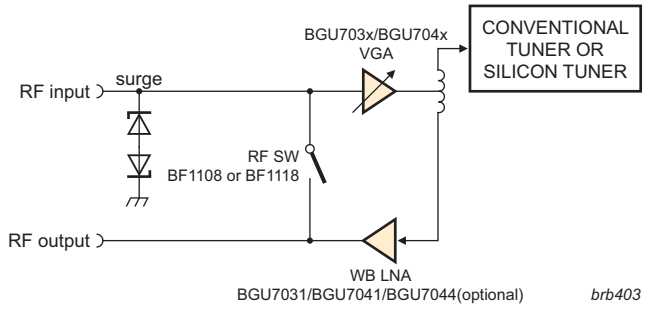

2.3.2 Complete satellite portfolio for all LNB architectures

NXP Satellite LNB devices TFF101xHN, BFU710F/730F, and BGA28xx

Designed for use in LNAs, mixers, and IF amplifiers, these robust, small-footprint products are the latest additions to NXP's leading portfolio for satellite LNB architectures. They are manufactured in NXP's groundbreaking QUBiC4X SiGe:C and QUBiC4+ process technologies.

Fully integrated Ku-band downconverters TFF101xHN

The TFF101xHN is a family of fully integrated downconverters for Ku-band LNBs. They give the best RF performance in terms of phase noise, gain, and noise figure at the lowest current consumption in the market.

Ku-band downconverter TFF101xHN/N1 for LNB

- Typical application: Universal single LNB & twin LNB
- Ultra-low current consumption: 52 mA over PVT
- Only 7 external components
- No inductors
- Single supply domain: 5 V
- Uses low-cost fundamental 25 MHz crystal
- High PL1dBo = 6 dBm / 3OIPo = 16 dBm
- Best-in-class PN < 1.4 deg RMS
  - 10 kHz to 13 MHz integration bandwidth
- Multiple gain types available
  - TFF1014HN/N1 36 dB
  - TFF1015HN/N1 39 dB
  - TFF1017HN/N1 42 dB
  - TFF1018HN/N1 45 dB
- Flat gain over frequency (< 2 dBpp)
- Input & output matched 50 Ω
- Small leadless DHVQFN16 package (2.5 x 3.5 x 0.85 mm)

RF transistors BFU710F/730F

The BFU710F and BFU730F are wideband RF transistors that can be used as an LNA or as a mixer for a DBS LNB in the Ku-band. In either application, they deliver good noise and linearity, a higher gain at a lower current consumption compared to their GaAs pHEMT equivalents, and the cost advantage of silicon.

BFU710F as LNA in Ku-band LNB

- Typical application: LNA2 for single-output LNB
- Overall similar RF performance to GaAs pHemt LNAs
- Power consumption: 3.5 mA
- Single supply: 3/5/6 V
- High RF gain: 13.5 dB
- Low noise figure: 1.6 dB
- Linearity (OIP3): 12 dBm

BFU710F as mixer in Ku-band LNB

- Typical application: Active mixer for single-output LNB
- Single supply 3/5/6 V
- Low power consumption: 2.5 mA
- LO drive < 0 dBm
- SSB noise figure < 8 dB (including BPF at the input)
- SSB conversion gain > 5 dB (including BPF at the input)
- Linearity (OIP3) > 0 dBm
- LO-RF isolation min 20 dB
- RF match better than 10 dB
- IF match better than 8 dB

BFU730F as LNA in Ku-band LNB

- Typical application: LNA2 and LNA3 for multi-output LNB
- Overall similar RF performance to GaAs pHemt LNAs
- Power consumption: 11 mA
- Single supply 3/5/6 V
- Very high RF gain: 11.5 dB
- Low noise figure: 1.25 dB
- Linearity (OIP3) > 17 dBm
- Return loss > 10 dB

MMICs BGA28xx as IF amplifiers (first stage & output stage)

For compatibility with existing designs, the series uses market standard packages: the SOT363 and the pin-compliant SOT363F. The pinning is identical to NXP's current gain block family, and the blocks deliver similar noise figures. New features include flatter gain, a positive gain slope, improved P1dB vs Icc, and no necessity for an output inductor.

- Internally matched at 50 Ω
- Gain slope > 0.5 dB

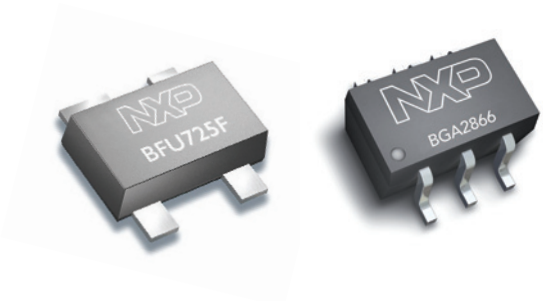

- Single supply voltage: 3.3 or 5 V
- Reverse isolation: > 30 dB up to 2 GHz
- Best-in-class power vs current consumption
- Noise figure: 4 to 6 dB at 1 GHz
- Unconditionally stable (K > 1)
- High-compression-point models work without output inductor
- 6-pin SOT363 plastic SMD package

These products – the integrated downconverters TFF101xHN, the wideband transistors BFU710F/730F for LNA and mixer functionality, and the BGA28xx series of IF MMICs – are the most recent additions to NXP's leading portfolio for satellite LNB. They join the other discrete products, including oscillators, amplifiers, and switches, to provide complete coverage for all LNB architectures.

Since the ICs, transistors, and the MMICs are manufactured in NXP's industry-leading QUBiC4X SiGe:C and QUBiC4+ process, they offer better overall RF performance and are more robust than their GaAs equivalents and offer the added cost advantage of silicon. The process technology also enables higher integration, for added features. NXP owns the industrial base for production (wafer fab, test, assembly), so volume supplies can be assured.

Satellite outdoor unit, twin low noise block (LNB) with integrated mixer/ oscillator/ downconverter

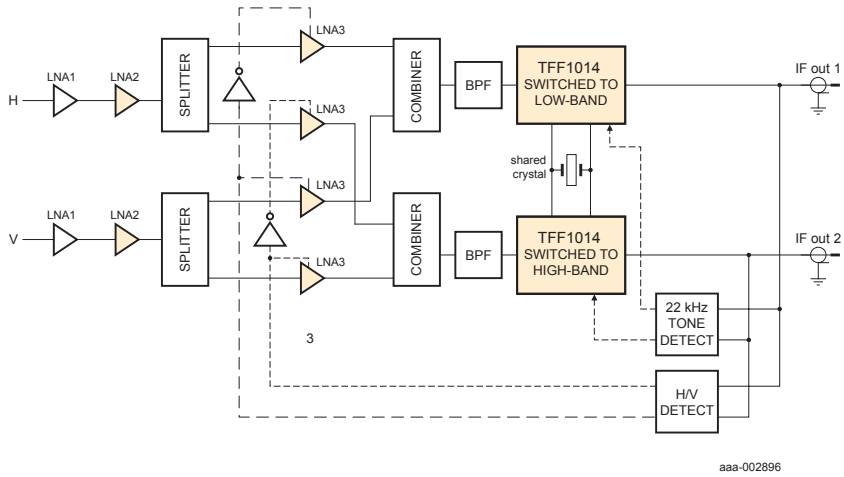

Note: Also see section 1.3.4 Satellite outdoor unit, twin low noise block (LNB) with integrated mixer/ oscillator/ downconverter

Fully integrated mixer/oscillator/downconverter

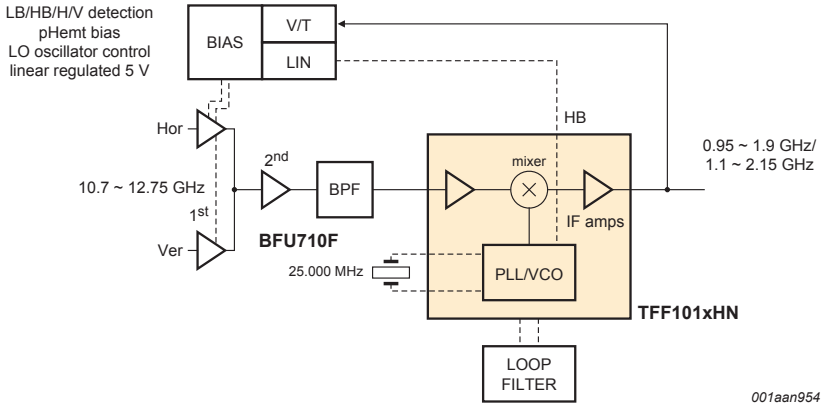

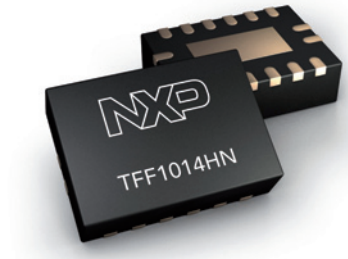

2.3.3 VSAT, 2-way communication via satellite

Design a Ku-/ Ka-band VSAT transceiver that meets IESS-308 with NXP's Ku-/ Ka-band RF LO generators

The TFF100xHN family are Ku-band RF PLLs, with integrated VCO intended for low phase-noise local-oscillator (LO) circuits in Ku- & Ka-band VSAT transmitters and transceivers. Manufactured in a high-performance SiGe:C process, these devices deliver extremely low phase noise and comply with the IESS-308 from Intelsat.

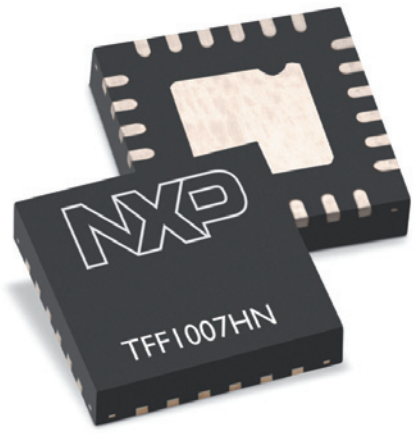

Features

- Phase noise compliant with IESS-308 (Intelsat)
- Differential input and output
- Divider settings at 16, 32, 64, 128, or 256
- Lock-detect output
- SiGe:C technology (120 GHz f_T process)
- HVQFN24 (SOT616-1) package

Applications

- VSAT block upconverters
- VSAT down conversion
- Local oscillator signal generation

VSAT networks are commonly used to transmit narrowband data, such as point-of-sale transactions for credit cards, or to transmit broadband data that supports satellite Internet access to a remote location, VoIP, or video.

The network typically consists of a dish antenna, an outdoor unit, and an indoor unit. The outdoor unit is used for frequency translation between RF and IF, and usually includes a microwave-based uplink/downlink separator, a low noise block (LNB) for receiving the downlink signals, and a block Upconverter (BUC).

The VSAT ICs can be used to create the LO generator for a linear BUC (meaning the IF or RF conversion is done by mixing with an LO).

To enable precise frequency and time multiplexing, the downlink signal provides an accurate frequency reference of 10 MHz. The indoor unit frequency multiplexes this with the uplink IF signal, and the LO signal in the BUC needs to be frequency-locked to the reference.

The TFF100xHN ICs are housed in a 24-pin HVQFN (SOT616-1) package. The pins have been assigned for optimal performance. Three voltage domains are used to separate the block on the IC, and two pins for each output (OUT-P and OUT-N) have been reserved to match a typical layout using a linewidth of Z = 50 Ω microstrip on a 20-mil RO4003 board (1.1 mm).

The ground pins have been placed next to the reference input and the output, and, to minimize crossings in the application, all the supply pins are on the same side of the IC.

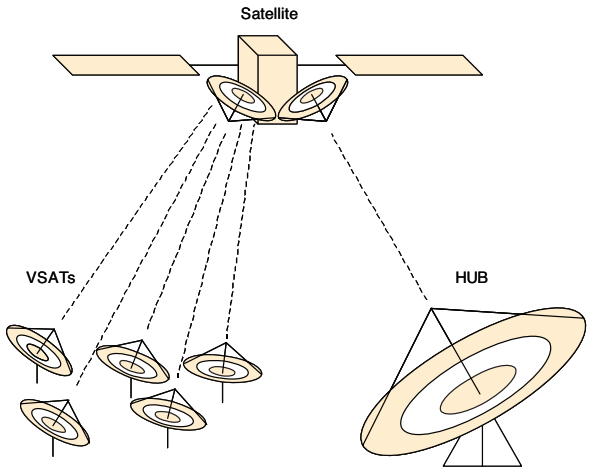

Typical VSAT network

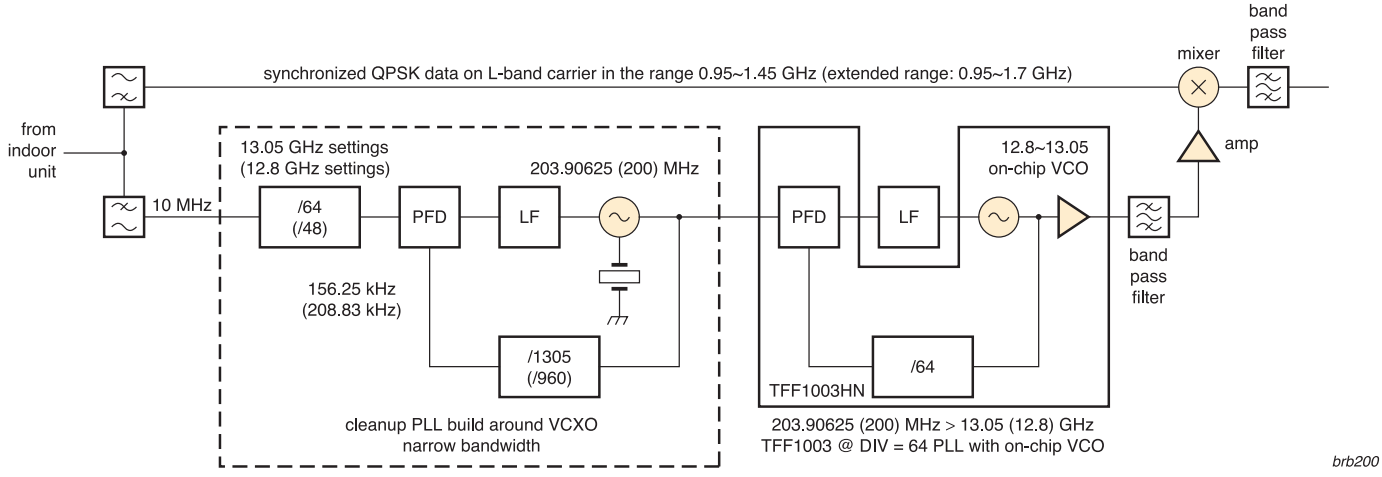

Complete LO generator for linear BUC with TFF1003HN

Type	Package	$f_{IN(REF)}$	V_{CC}	I_{CC}	PLL phase noise @ N=64 @ 100 kHz	PLL	Output buffer		Input
						$f_{o(RF)}$	P_o	$RL_{out(RF)}$	S_i
			Typ		Max		Typ	Max	Min
		(MHz)	(V)	(mA)	(dBc/Hz)	(GHz)	(dBm)	(dB)	(dBm)
TFF1003HN	SOT616	50 - 815	3.3	100	-92	12.8 - 13.05	-5	-10	-10
TFF1007HN	SOT616	228.78 - 234.38	3.3	130	-104	14.62 - 15	-3	-10	-10

Type	Application	I_{cc} (mA)	Single supply (V)	RF gain (dB)	NF (dB)	OIP3 (dBm)
BFU710F	Ku-band LNA2 for single output LNB	3.5	3/5/6	13.5	1.6	12
BFU730F	Ku-band LNA2 and LNA3 for multiple output LNB	11	3/5/6	11.5	1.25	17

Type	Application	I_{cc} (mA)	Single supply (V)	LO drive	SSB NF (dB)	SSB conversion gain (dB)	LO-RF isolation (dB)
BFU710F	Ku-band active mixer for single output LNB	2.5	3/5/6	< 0 dBm	< 8 dB	> 5 dB	min 20

2.3.4 Low noise LO generators for microwave & mmWave radios

NXP LO generators (integrated VCO/PLL) TFF11xxxHN

Manufactured in NXP's breakthrough QUBiC4X SiGe:C process technology, these highly integrated, alignment-free LO generators are low-power and low-spurious solutions that simplify design-in and lower the total cost of ownership.

Features

- TFF11xxxHN family: lowest-noise LO generators for a full family in 7 to 15 GHz range
- Maximum power consumption for all types is 330 mW (typ)
- Phase-noise compliant with IESS-308 (Intelsat)
- Proven QUBiC4X SiGe:C technology (120 GHz f_T process)
- External loop filter
- Differential input and output
- Lock-detect output
- Internally stabilized voltage reference for loop filter
- 24-pin HVQFN (SOT616-1) package

Applications: TFF11xxxHN family

- Industrial/medical test and measurement equipment
- Electronic warfare (EW)
- Electronic countermeasures (ECM)
- Point-to-point
- Point-to-multipoint
- Satellite communication/VSAT
- Radar systems

These low noise local-oscillator (LO) generators, optimized for use in many different microwave applications between 7 and 15 GHz, deliver highly accurate performance in a small footprint. They require no alignment or frequency modification on the production line, so they simplify manufacturing. High integration saves board space and makes design-in easier, for lower overall cost and faster development.

Since these ICs are manufactured in NXP's industry-leading QUBiC4X SiGe:C process, they offer better overall RF performance, are more robust than their GaAs equivalents, and consume much less power. The process technology also enables higher integration, for added features. NXP owns the industrial base for production (wafer fab, test, assembly), so volume supplies can be assured.

The TFF1003HN is the basis for the entire family of LO generators. It has VCO coverage of 12.8 to 13.05 GHz and accepts input signals from 50 to 816 MHz. The divider can be set for 16, 32, 64, 128, or 256, and the output level is -5 dBm with a stability of ±2 dB. The family of LO generators is completed by a range of 18 different devices operating in a center frequency ranging from 7 to 15 GHz. The RF performance of all these devices is consistent with the TFF1003HN.

All the LO generators have low power dissipation (330 mW typ), and all are available in a space-saving 24-pin HVQFN package.

Full portfolio overview of low noise LO generators for general microwave applications in section 3.4.4

2.4 Portable devices

2.4.1 The best reception of GNSS signals with the smallest footprint

NXP SiGe:C GPS LNAs BGU700x/BGU8007

NXP's GPS low-noise amplifiers offer the best reception of weak signals because of dynamic suppression of strong cellular and WLAN transmit signals. Moreover, as only two external components are required, designers can save up to 50% in PCB size and 10% in component cost.

Key features

- Low noise figure: 0.75 dB
- System-optimized gain of 16.5 or 19 dB
- Adaptive biasing dynamically suppresses strong cellular and WLAN transmit signals, resulting in improved linearity of 10 dB better IP3 under -40 to -20 dBm jamming conditions and effective GPS output with jammer powers up to -15 dBm
- AEC-Q100 qualified (BGU7004, BGU7008) for highest reliability in harsh conditions
- Only two external components required
- Small 6-pin leadless package: 1.45 x 1.0 x 0.5 mm

Key benefits

- Maintains optimal GPS signal reception for as long as possible
- Significant PCB size savings (50%)
- Lower component cost (10%)

Applications

- Smart phones, feature phones
- Tablets
- Personal Navigation Devices (PNDs)
- Digital Still Camera (DSCs)
- Digital Video Camera (DVCs)
- RF front-end modules (used in phones)
- Complete GPS chipset modules (used in DSCs)
- Automotive applications (BGU7004/8): toll collection, emergency call

These SiGe:C low-noise amplifiers (LNAs) improve the reception of GPS signals, including GloNass and Galileo. Available in extremely small 6-pin packages, they reduce footprint, lower cost, and enhance reception in systems that use an active or patch antenna.

GPS has become a standard feature in a very wide range of consumer products, from personal navigation devices to digital video cameras, watches, electric cars, and more. GPS signal power levels are weak and below the noise floor at -155 dBm. In many of these products, especially smart phones, strong transmitters such as WLAN and cellular can drive the GPS LNA into compression. When the GPS LNA is in compression, it has lower gain, and that can worsen GPS reception. Also, when the LNA is in compression, it generates intermodulation products and harmonics from the transmitter signals, which can overpower the weak GPS signals and lead to no GPS reception.

The NXP BGU700x/BGU8007 series use adaptive biasing to immediately detect any output power from jammers, and compensate by temporarily increasing the current. As a result, optimal GPS signal reception is maintained for as long as possible.

Each device in the BGU700x/BGU8007 series requires only one input matching inductor and one supply decoupling capacitor to complete the design. This creates a very compact design and lowers the bill of materials. Designers can save up to 50% in PCB size and 10% in component cost. For example, the BGU7005 is in a 1.45 x 1 mm package with application area at only 4.53 mm^2. This is 50% smaller than a comparable solution with a 9.06 mm^2 application area.

Application diagram

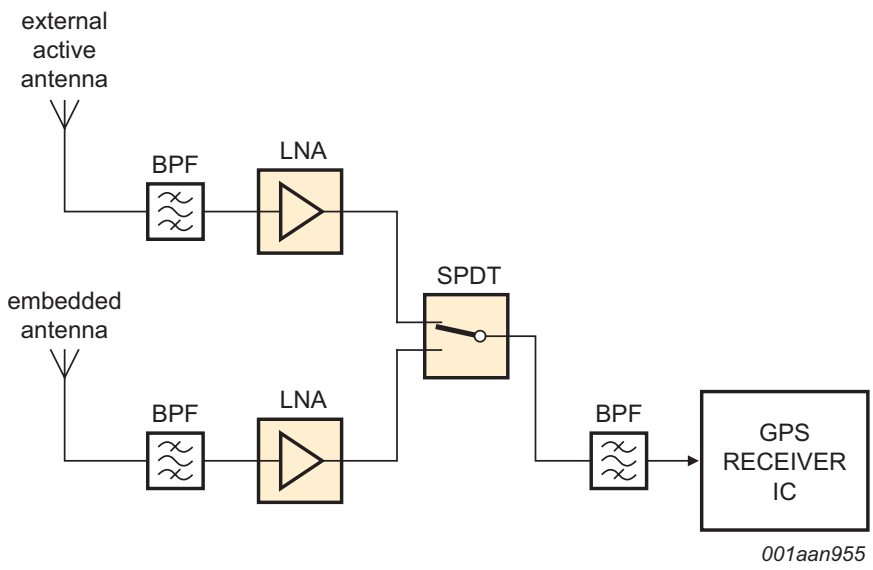

Smallest footprint

Type	Package	Package size	MMIC *					SMD's Appl.	SMD size		SMD's area	Appl. area
			X	Y	Pins	Pitch	Area		X	Y		
		mm	mm	mm	#	mm	mm²	#	mm	mm	mm²	mm²
BGU7005/7	SOT886	1.45 x 1	1.7	1.25	6	0.5	2.13	2	1.5	0.8	2.4	4.53
Competitor	Wafer-level package	1.26 x 0.86	1.5	1.1	6	0.4	1.65	6	1.5	0.8	7.2	8.85
Competitor	Wafer-level package	0.86 x 0.86	1.1	1.1	4	0.4	1.21	4	1.5	0.8	4.8	6.01
Competitor	Thin small leadless package	2 x 1.3	2.25	1.55	6	0.5	3.49	4	1.5	0.8	4.8	8.29
Competitor	Thin small leadless package	1.4 x 1.26	1.65	1.5	6	0.48	2.48	4	1.5	0.8	4.8	7.28
Competitor	Thin small outline non-leaded	1.5 x 1.5	1.75	1.75	6	0.5	3.06	5	1.5	0.8	6	9.06

* Includes keep-out area on PCB (a commonly used assembly rule)

SiGe:C GPS LNAs

Type	Package	Supply voltage		Supply current			@ 1.575 GHz: Insertion power gain			Noise figure	Input power at 1 dB gain compression									Input third-order intercept point f_1 = 1713 MHz, f_2 = 1851 MHz								
		V_{cc}		I_{cc}			$\|s_{21}\|^2$			NF	$P_{L(1dB)}$									$IP3_i$								
		(V)		(mA)			(dB)			(dB)	(dBm)									(dBm)								
		Min	Max	Min	Typ	Max	Min	Typ	Max	Typ	V_{cc} = 1.5 V, Min	V_{cc} = 1.5 V, Typ	V_{cc} = 1.8 V, Min	V_{cc} = 1.8 V, Typ	V_{cc} = 2.2 V, Min	V_{cc} = 2.2 V, Typ	V_{cc} = 2.5 V, I_{cc} = 5 mA	V_{cc} = 2.85 V, Min	V_{cc} = 2.85 V, Typ	V_{cc} = 1.5 V, Min	V_{cc} = 1.5 V, Typ	V_{cc} = 1.8 V, Min	V_{cc} = 1.8 V, Typ	V_{cc} = 2.2 V, Min	V_{cc} = 2.2 V, Typ	V_{cc} = 2.5 V, I_{cc} = 5 mA	V_{cc} = 2.85 V, Min	V_{cc} = 2.85 V, Typ
BGU7003	SOT891	2.2	2.85	3	-	15	16	18.3	20	0.8	-	-	-	-	-	-	-20	-	-	-	-	-	-	-	-	0	-	-
BGU7004^	SOT886	1.5	2.85	-	4.5	-	-	16.5*	-	0.9	-	-	-14	-11	-	-	-	-11	-8	-	-	5	9	-	-	-	5	12
BGU7005	SOT886	1.5	2.85	-	4.5	-	-	16.5*	-	0.9	-	-	-14	-11	-	-	-	-11	-8	-	-	5	9	-	-	-	5	12
BGU7007	SOT886	1.5	2.85	-	4.8	-	-	18.5**	-	0.9	-	-	-15	-12	-	-	-	-14	-11	-	-	1	4	-	-	-	2	5
BGU7008^	SOT886	1.5	2.85	-	4.8	-	-	18.5**	-	0.9	-	-	-15	-12	-	-	-	-14	-11	-	-	1	4	-	-	-	2	5
BGU8007	SOT886	1.5	2.2	-	4.6	-	-	19.0***	-	0.75#	-15	-12	-	-	-13	-10	-	-	-	1	4	-	-	2	5	-	-	-

* 16.5 dB without jammer / 17.5 dB with jammer
** 18.5 dB without jammer / 19.5 dB with jammer
*** 19.0 dB without jammer / 20.5 dB with jammer

^ AEC-Q101 qualified (some limitations apply)
# Evaluation board losses excluded

2.5 Industrial, scientific & medical

2.5.1 Medical applications driven by RF power: From imaging to cancer treatment, a flexible and versatile technology in the doctor's toolbox

RF technology is making its way into all kinds of medical applications, ranging from the well-known imaging techniques (MRI, EPRI) over low frequency, external heat treatment, and electro-surgical tools, to minimally invasive endoscopic cancer treatment (RF ablation). One clear trend is the increasing share of RF-based technologies for ablation. Another is the trend towards higher RF frequencies (several GHz) and higher powers (> 100 W) in order to achieve higher spatial resolution, better control, and shorter treatment times.

RF radiation is not a new technology in medicine. It is currently used for imaging purposes in MRI (magnetic resonance imaging) and EPRI (electron paramagnetic resonance imaging), techniques that employ frequencies from a few megahertz to about 500 MHz. Other well-known external heat-treatments to rejuvenate skin or relieve muscle pain make use of frequencies around 480 kHz – not too demanding in terms of RF. Surgical equipment to cut and simultaneously coagulate blood vessels runs off RF at about 5 MHz. The latter application belongs to a class of treatment techniques that is growing rapidly and uses RF radiation to deposit energy locally at various parts of the body – in general to "ablate" (remove) unwanted tissue. Inside the body, the RF energy heats the surrounding tissue until it is desiccated and/or necrotized. The damaged tissue will later be re-absorbed by the surrounding, living tissue. Further application examples for RF ablation include cancer treatment in the lung, kidney, breast, bone and liver, removal of varicose veins, treatment of heart arrhythmia, and a growing list of other applications that benefit from the high control and feedback possible with RF.

Another advantage of RF in this context is the fact that it can be applied via small catheters ending in antennas that deploy the RF signal. Unlike older, direct-current techniques, the tissue is heated only very locally around the antenna. Neighboring nerves (and the heart) are not stimulated. This led to the development of a variety of specialized catheters, used during minimally invasive surgery, along with ultrasound or X-ray imaging to determine the exact location of the RF-active part. During the treatment, the impedance of the surrounding tissue can be monitored and the end-point determined. With proper catheters, one can even achieve "self limitation" due to the reduced uptake of RF energy in desiccated tissue. Likewise, the RF frequency can be used to tune the energy deposition zone around the catheter: the higher the frequency, the smaller the penetration depth – and hence the volume to deposit the RF energy – in the watery tissue.

With the trend towards higher RF frequencies and powers, the complexity of RF generators and the requirements for the device technology also increase. Above 10 MHz, say, up to 3.8 GHz, the technology of choice for power amplifiers is Si LDMOS (laterally diffused metal oxide semiconductor). This technology has proven to be powerful, efficient, and rugged in base stations, radar systems, broadcast transmitters, and other industrial, scientific, and medical (ISM) applications. LDMOS is available from up to 50 V supply to achieve power levels up to 1,200 W per single device, with outstanding ruggedness and high gain and efficiency. To drive and control the LDMOS power amplifier stages, it takes voltage-controlled oscillators, phase locked loops, and medium power amplifiers. These parts of the RF signal chain are conveniently available based on reliable and high-volume SiGe:C (QUBiC) semiconductor technologies. Going a step further, one can even use high-speed converters to drive the signal chain entirely from the digital domain, for full and easy control over the shape and modulation of the applied RF.

RF implications

These in-situ medical applications and, in general, most of the ISM applications, usually form highly mismatched RF loads during some part of the usage cycle. This in turn means that, without protection or other measures, all of the "injected" RF power reflects back into the final stage of the amplifier and needs to be dissipated in the transistor(s), and most likely destroys the device(s) if this situation lasts too long. LDMOS transistors are designed to be extremely rugged and generally withstand these mismatch situations without degrading over time.

This device ruggedness, or the ability to withstand "harsh" RF conditions in general, be it mismatch or extremely short pulse rise and fall times, is essential for reliable device performance. RF power companies have gone to great lengths to achieve best-in-class device ruggedness. The technologies have been hardened under the most stringent ruggedness tests during development, which is particularly true for the 50 V technology. Among other factors, the base resistance of the parasitic bipolar and the drain extension of the LDMOS device play key roles in this respect.

This ruggedness, combined with the power density and the high efficiencies achievable, make LDMOS the preferred technology for RF power amplifiers up to 3.8 GHz.

2.5.2 RF-driven plasma lighting: The next revolution in light sources are powered by solid-state RF technology

Recent developments in RF power technology, such as improved cost structure, ruggedness, and power levels of up to 1200 W per device, have enabled a breakthrough light source technology, called 'RF plasma lighting'. All RF plasma lighting sources make use of a small, electrode-less quartz lightbulb that contains argon gas and metal halide mixtures. The bulb is powered by direct RF radiation, which ignites the gas mixtures to create and power a bright plasma, the color of which can be tuned by the composition of its constituents.

This technology works without any additional electrodes in the bulb, unlike standard high-intensity discharge lamps. No electrodes means very long operating lifetimes, since the contamination and wire erosion that lead to decreased efficiency and eventual lamp failure are precluded. The RF light source lives up to 50,000 hrs when it reaches 50% of its original light output. Typical high-intensity discharge lamps, by comparison, achieve 20,000 hrs operating life. Another strong point of the plasma light is its efficiency: 1 W of RF power is converted to 130-140 lm of light. This leads to very compact, very bright lamps that easily emit 10,000 to 20,000 lm of white light with a close-to-sunlight color rendition.

The key enabler for the RF light source is RF technology, based on Si LDMOS RF power transistors. LDMOS technology operating at 28 V is the leading RF power technology for cellular base stations or broadcast transmitters as final amplifier stages in the frequency range between a few MHz up to 3.8 GHz. Recently, another LDMOS format, 50 V LDMOS, has emerged for use in broadcast, ISM, defense and avionics applications. It combines high power density to achieve power levels up to 1,200 W per single device and outstanding ruggedness, with high gain and efficiency at frequencies of up to 1.5 GHz.

Comparison of lighting technologies

The table below summarizes currently available technologies that generate bright light with varying degrees of efficiency. It lists a few key parameters, including lifetime, luminous flux, efficacy, color rendition index, color temperature, start-up time, and re-strike time (time to start after switch-off from normal operation).

Type	Lifetime (hrs)	Luminous flux (klm)	Efficacy (lm/W)	Color rendering	Color temperature (K)	Start-up time (s)	Re-strike time (s)
Incandescent	2,000	1,700	10 to 17	100	3200	0.1	0.1
Fluorescent	10,500	3,000	115	51 to 76	2940 to 6430	0.3	0.1
LED	25,000	130	60 to 100	30	6000	0.1	0.1
HID (high-intensity discharge)	20,000	25,000	65 to 115	40 to 94	4000 to 5400	60	480
RF plasma	50,000	25,000	100 to140	70 to 94	4000 to 5500	30	25

Table 1: Comparison of light generation. Note: numbers are only valid for a qualitative comparison. Source: www.wikipedia.org and references therein.

The plasma light source is among the brightest and most efficient available to date and boasts a very long life time. Important to note is the high brightness per bulb: much brighter than LEDs, for example. Consequently, it takes multiple LEDs to generate the light output of a single plasma light source. Hence, LED luminaries for street lighting will be considerably larger than those for plasma light sources.

RF implications

The RF plasma lighting sources can operate at a wide range of RF frequencies, but initial applications typically focus at frequencies of around a few hundred megahertz. At these frequencies both the 28 and 50 V LDMOS technologies can be used, yielding high efficiency values of 70% to more than 80% and low-heat dissipation making compact plasma lamp designs possible.

The RF-driven plasma light is a perfect example of novel applications that can be powered by RF energy in the industrial, scientific, and medical (ISM) realm. Established technologies use RF to pump a gas discharge in a laser cavity. These "gas discharge" applications and, in general, most of the ISM applications, typically form highly mismatched RF loads during some part of the usage cycle. In the case of gas discharges, for example, the gas cavity acts as an "open circuit" during switch-on. This in turn means that without protection or other measures, all of the "injected" RF power reflected back into the final stage of the amplifier needs to be dissipated in the transistor(s) right there and most likely destroys the device(s) if this situation lasts too long. After the discharge strikes, the load impedance reverts to "matched," eventually, and the transistor sees an acceptable load. Obviously, these mismatched conditions occur every time the plasma is "switched on," exerting strain on the finals. LDMOS transistors are designed to be extremely rugged and generally withstand these mismatch situations without degrading over time.

This ruggedness, combined with the high power density and efficiency achievable, make LDMOS the preferred technology for RF lighting and other equally demanding applications in the ISM realm.

2.5.3 QUBiC4 Si and SiGe:C transistors for any RF function

NXP wideband transistors BFU6x0F & BFU7x0F

These next-generation devices offer the best RF noise figure versus gain performance, drawing the lowest current. This performance allows for better signal reception at low power and enables RF receivers to operate more robustly in noisy environments.

Key features

- 40/110 GHz transition frequency allows for applications up to 18 GHz and beyond
- High gain of 13.5 dB at 12 GHz with a low noise figure of 1.45 dB
- High linearity of 34 dBm (OIP3) at 1.8 GHz
- Consuming only 3 mA to generate 13.5 dB gain at 12 GHz
- Plastic surface-mount SOT343F package for high performance and easy manufacturing

Applications

- Wideband applications that require
  - Low-noise amplifiers
  - High linearity and high output amplifiers
  - Buffer amplifiers
  - Mixers
  - Oscillators

The devices in this family of sixth- (Si) and seventh- (SiGe:C) generation RF transistors can be used to perform nearly any RF function. For example, the BFUx10F, BFUx30F, BFU725/N1 can be used as low-noise amplifiers, while the BFUx60F and BFUx90F can be used as high-linearity and high-output amplifiers. Other options include using these transistors as buffer amplifiers, mixers, and oscillators.

Higher transition frequencies (40 to 110 GHz) enable higher application frequencies (24/77 GHz car radar, 18 GHz Ka band, 3.5-3.7 WiMas, etc.), and the devices meet the low current requirements of wideband applications.

As a result, these devices are ideal for use in a very wide range of applications: second and third LNA stage and mixer stage in DBS LNBs, Ka/Ku band DROs, satellite radio (SDARS) LNA, C-band/X-band high-output buffer amplifiers, AMR, WLAN/WiFi, ZigBee, Bluetooth, FM radio, GPS, cellular (LTE, UMTS), mobile TV, RKE, high-linearity applications, low current battery-equipped applications, low-noise amplifiers for microwave communications systems, medium output power applications, microwave driver/buffer applications, and more.

Selection guide – function

Function	LNAs, mixers, frequency multipliers, buffers			High-linearity, high-output amplifiers & drivers			Oscillators		
Frequency range	<6 GHz	6 GHz – 12 GHz	12 GHz – +18 GHz	<6 GHz	6 GHz – 12 GHz	12 GHz – 18 GHz	<6 GHz	6 GHz – 12 GHz	12 GHz – +18 GHz
Type / Band	L,S,C	X, Ku low	Ku high, Ka	L,S,C	X, Ku low	Ku high	L,S,C	X, Ku low	Ku high, Ka
BFU610F	•	•							•
BFU630F	•	•		•			•		•
BFU660F	•			•			•	•	
BFU690F	•			•			•	•	
BFU725F/N1	•	•	•	•	•		•		•
BFU710F	•	•	•						•
BFU730F	•	•	•	•	•	•	•		•
BFU760F	•	•		•	•		•		
BFU790F	•			•			•		

Red = application note available on NXP.com

Selection guide – specification

Typenumber	Package	Package name	generation	f_T [typ] (GHz)	V_{CEO} [max] (V)	I_C [max] (mA)	P_{tot} [max] (mW)	Polarity	NF (dB)	@ f (GHz)	@ I_C (mA)	@ V_{CE} (V)	NF (dB)	@ f (GHz)	@ I_C (mA)	@ V_{CE} (V)	$PL_{(1dB)}$ [typ] (dBm)	@ f (GHz)	@ I_C (mA)	@ V_{CE} (V)	IP3 [typ] (dBm)	@ f (GHz)	@ I_C (mA)	@ V_{CE} (V)
BFU610F	SOT343F	DFP4	6th	15	5.5	10	136	NPN	1.1	2.4	2	2	1.7	5.8	2	2	3	5.8	10	1.5	18	5.8	10	1.5
BFU630F	SOT343F	DFP4	6th	21	5.5	30	200	NPN	0.85	2.4	3	2	1.3	5.8	3	2	12.5	5.8	30	2.5	27.5	5.8	30	2.5
BFU660F	SOT343F	DFP4	6th	21	5.5	60	225	NPN	0.6	1.5	6	2	1.2	5.8	6	2	18.5	5.8	60	4	28	5.8	40	4
BFU690F	SOT343F	DFP4	6th	18	5.5	100	230	NPN	0.6	1.5	15	2	0.7	2.4	15	2	20	2.4	70	4	33	2.4	70	4
BFU710F	SOT343F	DFP4	7th	43	2.8	10	136	NPN	0.85	5.8	2	2	1.45	12	2	2	4.5	5.8	5	2.5	19.5	5.8	10	1.5
BFU725F/N1	SOT343F	DFP4	7th	55	2.8	40	136	NPN	0.7	5.8	5	2	1.1	12	5	2	8	5.8	25	2	19	5.8	25	2
BFU730F	SOT343F	DFP4	7th	55	2.8	30	197	NPN	0.8	5.8	5	2	1.3	12	5	2	12.5	5.8	15	2.5	29	5.8	20	2.5
BFU760F	SOT343F	DFP4	7th	45	2.8	70	220	NPN	0.4	1.5	12	2	0.5	2.4	12	2	18.5	5.8	30	2.5	33	5.8	30	2.5
BFU790F	SOT343F	DFP4	7th	25	2.8	100	234	NPN	0.4	1.5	20	2	0.5	2.4	20	2	19	2.4	60	2.5	34	2.4	30	2.5

2.5.4 Building on decades of innovation in microwave and radar

NXP builds on more than 50 years of history in semiconductor technology and component design. For more than three decades we have led in providing high-performance RF technologies for microwave applications. The company has built a strong position in the field of RF small-signal and power transistors for microwave amplifiers with best-in-class Si devices and processing technologies.

We were the first semiconductor company to supply S-band transistors (2700 to 3500 MHz) based on laterally diffused metal-oxide-silicon (LDMOS). To further strengthen our position towards the future, we are currently developing new high-power and high-bandwidth technologies based on gallium nitride (GaN) material.

Another enabling technology is NXP's BICMOS process QUBiC, which is available in several variants with f_T up to 200 GHz, each specialized to address specific small-signal RF applications.

The product portfolio encompasses:

- Low-noise amplifiers (LNAs)
- Variable-gain amplifiers (VGAs)
- Mixers
- Local oscillators (LOs)
- LO generators

NXP now also focuses on architectural breakthroughs and has developed highly integrated products for microwave and millimeter wave. One example is a family of LO generators from 7 to 15 GHz with integrated PLL and VCO. Another example is an integrated RF power module in S-band (3.1-3.5 GHz) at 200 W.

RF small-signal product highlight

Manufactured in NXP's breakthrough QUBiC4X SiGe:C process technology, these highly integrated, alignment-free LO generators TFF1xxxHN are low-power, low-spurious solutions that simplify design-in and lower the total cost of ownership.

Features

- Lowest noise LO generators for 7 to 15 GHz range
- Maximum power consumption for all types, typical 330 mW
- Phase-noise compliant with IESS-308 (Intelsat)
- Proven QUBiC4X SiGe:C technology (120 GHz f_T process)
- External loop filter
- Differential input and output
- Lock-detect output
- Internally stabilized voltage reference for loop filter

RF power product highlight

The BLS6G2933P-200 is the first LDMOS-based, industry-standard pallet produced by NXP. This pallet offers more than 40% efficiency and includes the complete bias network for S-band applications.

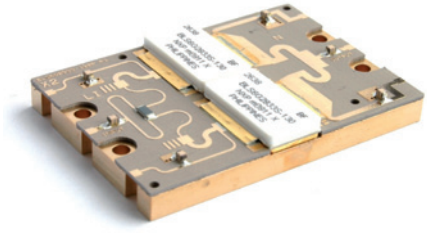

Features

- Reduces component count and considerably simplifies radar system design
- P1 dB output power 200 W
- Efficiency > 40%
- Industry-standard footprint
- 50 Ω in/out matched for entire bandwidth
- Lightweight heat sink included
- The advantages of LDMOS over Bipolar
  - Higher gain and better efficiency
  - Better ruggedness – overdrive without risk to 5 dB
  - Improved pulse droop and insertion phase
  - Consistent performance – no tuning required
  - Improved thermal characteristics – no thermal runaway
  - Non-toxic packaging and RoHS-compliance

Microwave applications and bands of operation

System	Frequency
VHF and UHF	<1 GHz
L-band	1200 - 1400 MHz
S-band	2700 - 3500 MHz
X-band	8000 - 12000 MHz
Commercial avionics	
DME (Distance Measuring Equipment)	978 - 1215 MHz
Transponders	
Mode A / Mode S / Mode C / TCAS	1030 - 1090 MHz
Military avionics	
IFF transponders (Identification, Friend or Foe)	1030 - 1090 MHz
TACAN (Tactical Air Navigation)	960 - 1215 MHz
JTIDS / MIDS (Joint Tactical Information Distribution System)	960 - 1215 MHz
Marine radar	9300 - 9500 MHz

For a complete list of products, see the respective small-signal and power microwave pages in chapter 3

2.5.5 Digital broadcasting at its best

The BLF881 / BLF888A transistor line-up enables today's most powerful and efficient digital broadcast transmitter applications

BLF881

This transistor is based on NXP's 50 V LDMOS technology and features 120 W RF output power for broadcast transmitter and industrial applications. An unmatched device, the BLF881 can be used in the HF to 1 GHz range. The excellent ruggedness and broadband performance of this device make it ideal for digital transmitter applications – either on its own or as a driver in combination with the high-power transistor BLF888A.

The BLF881 is also available in an earless version, the BLF881S, which enables an even more compact PCB design.

BLF888A

Running from a 50 V supply voltage, the BLF888A is a 600 W LDMOS RF power transistor for broadcast transmitter and industrial applications. Being a matched device, the BLF888A is optimized for digital signal broadcasting and can deliver 120 W average DVB-T output power over the full UHF band from 470 MHz to 860 MHz with 20 dB power gain and 31% drain efficiency. The excellent ruggedness of this transistor (it withstands a VSWR in excess of 40:1) makes it the ultimate choice as final stage for digital transmitter applications – ideally accompanied by a BLF881 as the driver. This device is also available in an earless package, denoted BLF888AS, to enable surface-mount assembly processes and take optimum advantage of the very low thermal resistance of the package.

Key features and benefits

- Excellent efficiency and reliability
- Highest power levels in the market
- Best-in-class ruggedness designed into all devices
- Best broadband performance
- Easy power control
- Best-in-class design support
- Low thermal resistance design for unrivalled reliability
- Advanced flange material for optimum thermal behavior and reliability
- Designed for broadband operation (470 to 860 MHz)

Key applications

- Analog and digital TV transmitters

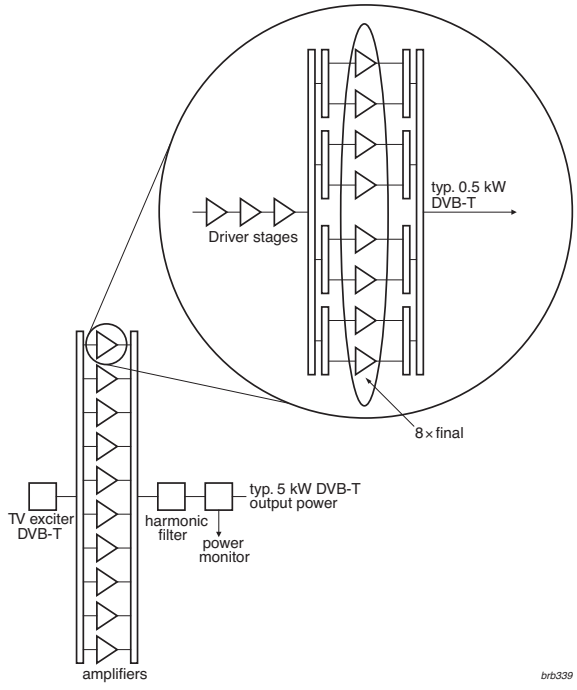

Type	Product	f_{min} (MHz)	f_{max} (MHz)	P1dB (W)	Matching	VDS (V)	P_L (W)	η_D (%)	G_p (dB)	Test signal	Package
BLF642	Driver	1	1400	35	-	32	35	63	19	CW	SOT467C
BLF884P(S)	Final	470	860	300	I	50	150	46	21	CW	SOT1121
BLF879P		470	860	500	I	42	200	47	21	CW	SOT539A
BLF888A(S)		470	860	600	I	50	250	46	21	CW	SOT539
BLF888B(S)		470	860	600	I	50	250	46	21	CW	SOT539
BLF881(S)		1	1000	140	-	50	140	49	21	CW	SOT467

2.5.6 Setting the benchmark for ultra low-power and high-performance wireless connectivity solutions

NXPs JN5148/2 wireless microcontroller platform with chipsets, modules, and supporting software

NXP provides a complete package for the development of IEEE802.15.4-based wireless network solutions, incorporating all the necessary hardware and software components. NXP's JN514x range of wireless microcontroller chips provides the optimum hardware platform for designing wireless network nodes that combine high-performance processing and radio communications. NXP also supplies JN514x wireless microcontrollers mounted on modules, and evaluation kits that simplify the development of custom applications.

Products

- JN5142-J01 for JenNet-IP Smart Devices, JN5148-J01 for JenNet-IP Gateways
- JN5148-001 for JenNet and IEEE802.15.4, JN5142-001 for RF4CE and IEEE802.15.4
- JN5148-Z01 for ZigBee applications
- JN5148-001-M00, JN5148-001-M03, JN5148-001-M04: modules for JenNet and IEEE802.15.4

Key features

- Ultra low-power MCU together with an IEEE802.15.4-compliant radio transceiver
- Enhanced 32-bit RISC processor for high performance and low power
- On-chip ROM and RAM for storage of application, networking stack, and software libraries
- A rich mix of analog and digital peripherals
- Low-current solution for long battery-life
- Standard-power and high-power modules
- Software Developer's Kit (SDK), including JenNet, JenNet-IP and ZigBee networking stacks

Key applications

- Smart lighting / smart energy / smart grid
- Utilities metering
- Home and commercial building automation and control
- Remote control
- Security systems
- Location-aware services – eg asset management

Software

A selection of network protocol stacks, based on the industry-standard IEEE802.15.4, is available to support the wireless connectivity requirements of your application. These include JenNet, JenNet-IP, and ZigBee PRO, which are provided as a set of software libraries.

JenNet is suitable for all proprietary applications. ZigBee PRO is used for smart energy and other applications where ZigBee interoperability is required. JenNet-IP provides IPv6 connectivity to the end node and is rapidly emerging as a standard for lighting and automation applications in buildings.

Evaluation kit

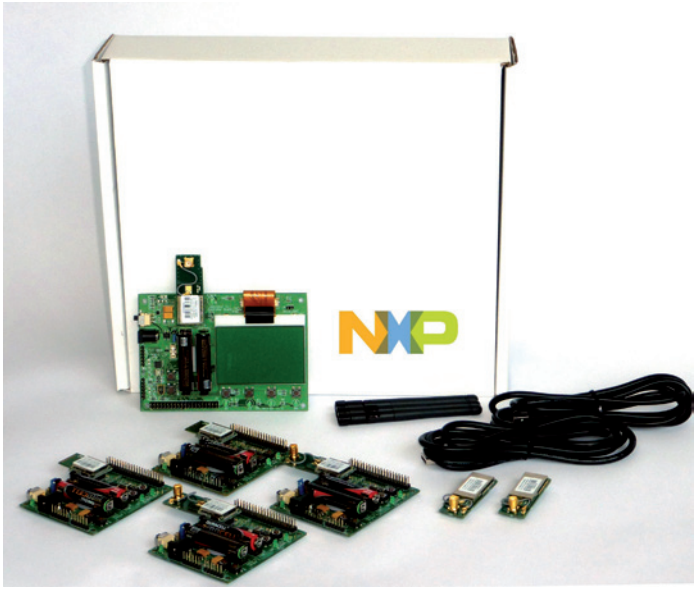

2.6 Technology

2.6.1 The first mainstream semiconductor company to offer GaN products

NXP Galium-Nitride (GaN) broadband amplifiers

A disruptive technology, setting new performance boundaries for RF power amplifiers

If independent market research claims come true, GaN product sales will exceed 300 Musd in 2014. This can only happen if GaN is made available through mainstream semiconductor companies, and NXP is the first to make this happen. So, what is it about GaN and RF power applications? Simply put, GaN makes a step increase in efficiency and power density performance over Si LDMOS in most applications. This can be quantified in the Johnson's Figure of Merit (FoM) – a combination of significant RF performance variables that has a baseline for Si at 1 and leads to a FoM for GaN of 324. To put this into some context, GaAs, another commonly used compound material in RF, has a FoM of 1.44. With such a high FoM rating, GaN truly represents a breakthrough technology.

GaN products are termed High-Electron Mobility Transistors (HEMT), a name that captures one of the intrinsic benefits of GaN: the high electron drift velocity. These transistors are depletion-mode devices, that is, devices that are normally on, without the need for applying a gate bias. A negative gate bias will be needed to switch the transistors off. This biasing is not straightforward, but at NXP, we've developed complete solutions (not just individual components) that include a tried and tested bias circuit. We also provide continuous application support throughout the life of the product.

A further advantage of GaN is that it is a very hard structure able to withstand very high temperatures. NXP's GaN transistors will be specified to a maximum temperature of 250 °C, compared to 225 °C for Si LDMOS. Special packages are required to support such high temperatures. In this area, NXP's GaN customers benefit from our 30-year legacy in RF power products, and our large industrial base. As a GaN supplier, we deliver excellence in product reliability and cost, and give our customers a high degree of confidence in the supply chain. It's part of what's needed to take GaN to the mainstream.

The first NXP GaN products will be unmatched broadband amplifiers for use in applications requiring high RF performance across a wide range of frequencies up to 3.5 GHz. NXP's first generation GaN process is designed for products operating from a 50V supply voltage, delivering best-in-class efficiency and linearity. The products will use industry-standard package footprints enabling customers to adopt NXP's products into existing designs without changing the mechanical design.

Next-generation GaN devices from NXP will be super-efficient, enabling a breakthrough in performance for the largest RF power market segment: cellular base stations. In turn this technology will enable a departure from linear amplifier topologies with the onset of switched mode power amplifier (SMPA) concepts. NXP's commitment to exploit the technology in a full portfolio of products will also lead to products for higher frequency applications up to 10 GHz.

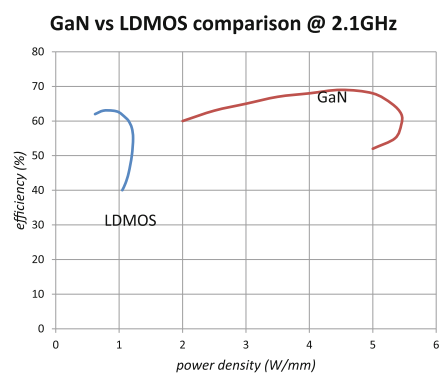

GaN RF power amplifiers

Type	f_{min} (MHz)	f_{max} (MHz)	P_{out} (W)	Matching	V_{DS} (V)	η_D (%)	G_p (dB)	Test signal	Package	Planned release	Applications
CLF1G0035-50	0	3500	50	-	50	54	14.2	Pulsed	SOT467	Q312	Cellular, WiMAX, ISM, avionics, S-band, general purpose
CLF1G0035-100	0	3500	100	-	50	52	14.8	Pulsed	SOT467	Q412	Cellular, WiMAX, ISM, avionics, S-band, general purpose
CLF1G0035-200	0	3500	200	-	50	50	14.2	Pulsed	SOT1228	Q313	Cellular, WiMAX, ISM, avionics, S-band, general purpose
CLF1G0060-10	0	6000	10	-	50	54	14	Pulsed	SOT1227	Q113	Cellular, WiMAX, ISM, avionics, S-band, general purpose
CLF1G0060-30	0	6000	30	-	50	54	14	Pulsed	SOT1227	Q113	Cellular, WiMAX, ISM, avionics, S-band, general purpose
CLF2G2536-100	2500	3600	100	I/O	28	65	13	Pulsed	SOT1135	Q413	Cellular, WiMAX, S-band
CLF2G2536-300	2500	3600	300	I/O	28	65	13	Pulsed	SOT502	Q413	Cellular, WiMAX, S-band
CLF3G4060-30	4000	6000	30	I/O	28	55	13	Pulsed	SOT1135	Q114	C-band
CLF3G4060-350	4000	6000	350	I/O	28	55	13	Pulsed	SOT502	Q114	C-band

2.6.2 Completing NXP's RF power transistor offering: products in plastic packages (OMP)

NXP is currently developing a complete line of overmolded plastic (OMP) RF power transistors and MMICs with peak powers ranging from 3 to 500 W. The main benefit of plastic packages is cost effectiveness with little or no impact on performance. The range of plastic devices will complement the extensive range of RF power products that NXP offers in ceramic packages for all frequency ranges and applications up to 2.45 GHz.

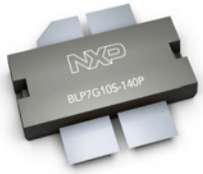

Products in development

- Single-stage broadband drivers in HSOP-outlines, from 3 to 10 W
- Single-stage OMP drivers from 25 to 45 W, replacing their ceramic equivalents for cost-sensitive applications
- Dual-stage MMICs from 30 to 60 W that can be used as high-gain drivers or combined as low-power dual-stage Doherty amplifiers
- Fully integrated plug-and-play Doherty PAs in a single package (50 to 100 W)
- Final transistors in OMP package (SOT502-sized) ranging from 140 to 200 W in frequency bands from 730 MHz to 2.2 GHz
- Final transistors in OMP package (SOT502-sized) ranging from 3 to 500 W in ISM frequency bands from a few MHz up to 2.45 GHz

Some of these products are available for sampling now, while the rest of the portfolio will be rolled out throughout 2012.

RF power products in plastic packages (OMP)

Type	f_{min} (MHz)	f_{max} (MHz)	P1dB (W)	Matching	Package	Description
BLP7G22-10	700	2200	10	-	SOT1179	Gen7 OMP LDMOS transistor for WCDMA & GSM applications
BLM7G22S-60PB(G)	2000	2200	60	I/O	SOT1212	Gen7 LDMOS MMIC for WCDMA applications (gull-wing)
BLP7G07S-140P(G)	700	900	140	O	SOT1224	Gen7 OMP push-pull LDMOS transistor for GSM, WCDMA & LTE applications (gull-wing)
BLP7G09S-140P(G)	900	1000	140	O	SOT1224	Gen7 OMP push-pull LDMOS transistor for GSM, WCDMA & LTE applications (gull-wing)

2.6.3 Looking for a leader in SiGe:C? You just found us!

NXP QUBiC4 process technology

NXP's innovative, high-performance SiGe:C QUBiC4 process lets customers implement more functions into less space, with the added benefits of competitive cost, superb reliability, and significant manufacturing advantages. Our state-of-the-art QUBiC4 technology and extensive IP availability speed the migration from GaAs components to silicon by enabling cutting-edge products with best-in-class low noise performance, linearity, power consumption, immunity to out-of-band signals, spurious performance, and output power. QUBiC is a mature process that has been in mass production since 2002 and has had continuous performance upgrades added ever since. The QUBiC4 process is automotive-qualified and dual-sourced in two high-volume, NXP-owned 8-inch waferfabs that provide flexible, low-cost manufacturing with high yields and very low ppm in the field.

There are three QUBiC4 variants, each with its own benefits for specific application areas

QUBiC4+

The QUBiC4+ BiCMOS process features 0.25 µm CMOS with 5 metal layers for integration of dense digital logic-based smart functionality, a rich set of active and passive devices for high-frequency mixed-signal designs, including thick top metal layers for high-quality inductors. The device set includes 35 GHz f_T NPNs with 3.8 V breakdown voltage (BVce0) and low noise figure (NF < 1.1 dB @ 2 GHz), 5 GHz f_T VPNPs, a 28 GHz high-voltage NPN with 5.9 V breakdown voltage, differential and single-ended varicaps with Q-factor > 30, scalable inductors with Q-factor > 20, 800 MHz FT lateral PNPs, 0.25 µm CMOS, 137, 220 & 12 to 2000 ohm/sq. poly and active resistors, a 270 ohm/sq. SiCr thin film resistor, a 5.7 fF/µm2 oxide capacitor and a 5 fF/µm2 MIM capacitor, 1 to 6 fF/µm2 oxide capacitors and various other devices including L-PNPs, isolated NMOS, 3.3 V CMOS and RF-CMOS transistors capacitor. The QUBiC4+ process is silicon-based and ideal for applications up to 5 GHz (f_T = 35 GHz, NF < 1.1 dB @ 2 GHz), as well as for medium power amplifiers up to 33 dBm.

QUBiC4X

The QUBiC4X BiCMOS process is a SiGe:C-based extension of the QUBiC process for high-frequency mixed-signal designs and offers a rich set of devices, including a 110 GHz f_T NPN with 2.0 V breakdown voltage and very low noise figure (NF < 1.0 dB @ 10 GHz), 0.25 µm CMOS, a variety of resistors, a 5.7 fF/µm2 oxide capacitor, and a 5 fF/µm2 MIM capacitor.

The QUBiC4X is ideal for applications that typically operate at up to 30 GHz (f_T = 110 GHz , NF < 1.0 dB @ 10 GHz) and ultra-low noise applications such as LNAs and mixers.

QUBiC4Xi

The QUBiC4Xi BiCMOS process further enhances the QUBiC4X process and offers an additional feature set of devices for high-frequency mixed-signal designs. These include 180 GHz f_T NPNs with 1.4 V breakdown voltage and ultra-low noise figure (NF < 0.7 dB @ 10 GHz), 0.25 µm CMOS, several resistors, a 5.7 fF/µm2 oxide capacitor and a 5 fF/µm2 MIM capacitor. QUBiC4Xi represents the newest SiGe:C process, with improved f_T (> 200 GHz) and even lower noise figure (NF < 0.6 dB @ 10 GHz). It is ideal for applications beyond 30 GHz, such as LO generators.

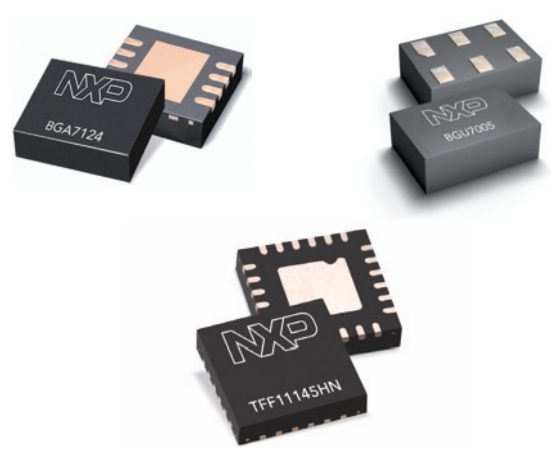

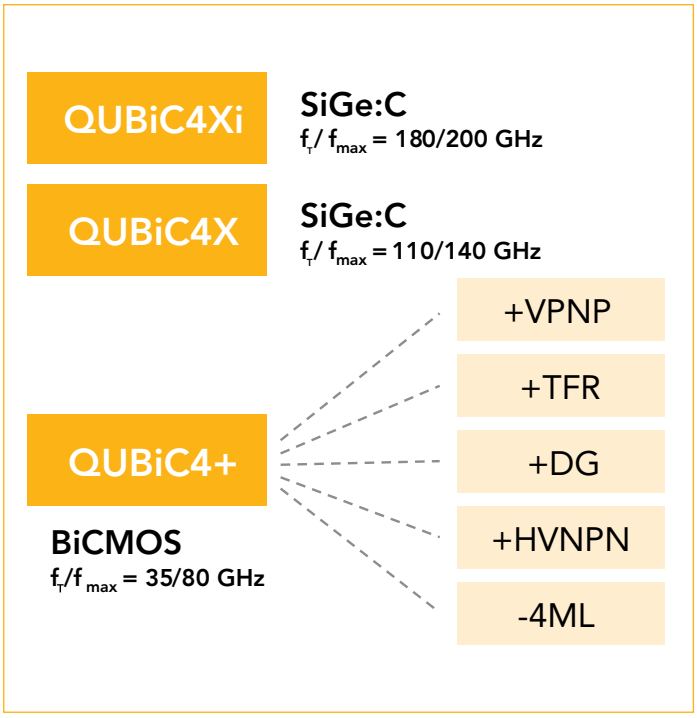

QUBiC4+

- Baseline, 0.25 µm CMOS, single poly, 5 metal
- Digital gate density 26k gates/mm^2
- f_T/f_{MAX}= 35/80 GHz
- +TFR – Thin Film Resistor
- +DG – Dual Gate Oxide MOS
- +HVNPN – High Voltage NPN
- +VPNP – Vertical PNP (high V_{early})
- -4ML – high-density 5fF/µm^2 MIM capacitor
- Wide range of active and high-quality passive devices
- Optimized for up to 5 GHz applications

QUBiC4X

- SiGe:C process
- f_T/f_{MAX}= 110/140 GHz
- Optimized for applications up to 30 GHz

QUBiC4Xi

- SiGe:C process
- Improves f_T/f_{max} up to 180/200 GHz
- Optimized for ultra-low noise microwave above 30 GHz

Features	QUBiC4+	QUBiC4X	QUBiC4Xi
Release for production	2004	2006	2008
CMOS/bipolar	CMOS 0.25 um, bipolar 0.4 um, double poly, deep trench, Si	CMOS 0.25 um, bipolar LV 0.4 um, double poly, deep trench, SiGe:C	CMOS 0.25 um, bipolar LV 0.3 um, double poly, deep trench, SiGe:C
LV NPN f_T/F_{max} (GHz)	35/80 (Si)	110/140 (SiGe:C)	180/200 (SiGe:C)
HV NPN f_T/F_{max} (GHz)	28/70 (Si)	60/120 (SiGe:C)	90/200 (SiGe:C)
NPN BVce0: HV/LV **	5.9 / 3.8 V	3.2 / 2.0 V	2.5 / 1.4 V
V-PNP f_T / BVcb0 (GHz / V)	5 / >9	Planned	Planned
CMOS voltage / dual gate	2.5 / 3.3 V	2.5 V	2.5 V
Noise figure NPN (dB)	2 GHz: 1.1	10 GHz: 1.0	10 GHz: 0.6
RFCMOS f_T (GHz)	NMOS 58, PMOS 19	NMOS 58, PMOS 19	NMOS 58, PMOS 19
Isolation (60 dB @ 10 GHz)	STI and DTI	STI and DTI	STI and DTI
Interconnection (AlCu with CMP W Plugs)	5 LM, 3 µm top metal	5 LM, 3 µm top metal 2 µm M4	5 LM, 3 µm top metal
Capacitors	NW, DN, Poly-Poly 5fF/um2 MIM	NW, DN, Poly-Poly 5fF/um2 MIM	NW, DN, Poly-Poly 5fF/um2 MIM
Resistors (Ω/sq)	Poly (64/137/220/2K) Active (12, 57), high-precision SiCr (270)	Poly (64/220/330/2K), Active (12, 57), high-precision SiCr (tbd)	Poly (64/220/330/2K), Active (12, 57), high-precision SiCr (tbd)
Varicaps (single-ended & differential)	1x single-ended, Q > 40 3x differential, Q 30-180	1x single-ended, Q > 40 3x differential, Q 30-180	1x single-ended, Q > 40 3x differential, Q 30-180
Inductors (1.5nH @ 2 GHz) - scalable	Q > 21, thick metal, deep trench isolation, high R substrate	Q > 21, thick metal, deep trench isolation, high R substrate	Q > 21, thick metal, deep trench isolation, high R substrate
Other devices	LPNP, isolated NMOS, VPNP, transformers	Isolated-NMOS, transformers	Isolated-NMOS, transformers
Mask count	32 (MIM) / 34 / 33 (HVNPN) / 35 (VPNP)	36 (MIM)	36 (MIM)

2.6.4 High-performance, small-size packaging enabled by NXP's leadless package platform and WL-CSP technology

RF small-signal packaging is driven by two major trends which partly overlap

- Lower parasitics for better RF performance
- Smaller form factors for portable applications

To cope with these trends, NXP uses several approaches

- For non-space-restricted applications the use of flat-pack packages instead of gull-wing versions reduces the parasitic impedance because of shorter lead length (e.g. SOT343F instead of SOT343). This results in better RF performance in the Ku and Ka bands (13-20GHz). To reduce PCB board space, a smaller version (SOT1206) is also available.

SOT343

SOT343F

SOT1206

- For space-restricted applications there are two routes to reduce the form factor and parasitics:
  - Leadless package platform
  - Wafer Level Chip Scale Package (WL-CSP) technology

The leadless package (UTLP) platform (>25 variants already released) is highly flexible with respect to package size, package height, and I/O pitch. For example, the 6-pin packages range in size from 1.45 x 1 x 0.5 mm with 0.5 mm pitch to 0.8 x 0.8 x 0.35 mm with 0.3 mm pitch. Package height of 0.25 mm is planned.

Because of the compact size of the design, wire lengths and parasitic impedance are also restricted. The absence of leads further reduces the inductance.

SOT886

SOT891

SOT1208

Wafer Level Chip Scale Package technology is ideally for RF functions where the I/O pitch has to fit within the chip area. With larger pitches and smaller designs (and thus little effective chip area), it is more cost-effective to do the fan-out using a leadless package instead of increasing the chip size.

The absence of wires gives the lowest parasitic inductance available.

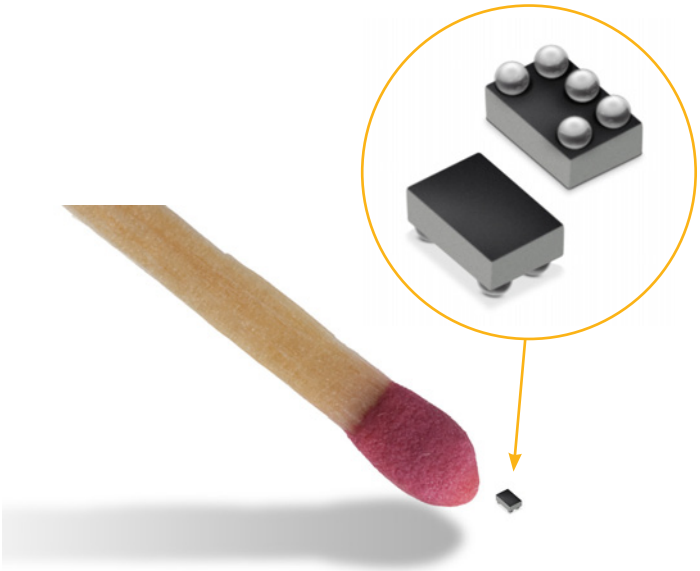

0.65 x 0.44 x 0.29 mm (incl. 0.09 mm balls)
5 I/Os @ 0.22 mm pitch

3. Products by function

NXP RF product catalog:
http://www.nxp.com/rf

3.1 New products

DEV = in development
CQS = customer qualification samples
RFS = release for supply

Type	Application / description	Expected status June 2012	Planned release	Section
NEW: Wideband transistors				
BFU730LX	Gen7 wideband transistor	RFS	Released	3.3.1
NEW: SiGe:C LNAs (for e.g. GPS)				
BGU8007	GPS LNA, 19.0 dB gain, AEC-Q100	RFS	Released	3.4.1
BGU7003W	General-purpose unmatched LNA for FM radio	RFS	Released	3.4.1
BGU6101	Unmatched wideband MMIC w/ bias enable function & wide range of supply voltage	RFS	Released	3.4.1
BGU6102	Unmatched wideband MMIC w/ bias enable function & wide range of supply voltage	RFS	Released	3.4.1
BGU6104	Unmatched wideband MMIC w/ bias enable function & wide range of supply voltage	RFS	Released	3.4.1
NEW: LNAs for set-top boxes				
BGU7044	LNA for STB tuning	RFS	Released	3.4.1
BGU7045	LNA for STB tuning	RFS	Released	3.4.1
NEW: General-purpose wideband amplifiers (50 Ω gain blocks)				
BGA2874	IF gain block 30.5 dB, 2.5 V	RFS	Released	3.4.1
BGA2817	IF gain block 24 dB, 3 V	RFS	Released	3.4.1
BGA2818	IF gain block 31 dB, 3 V	RFS	Released	3.4.1
BGA2851	IF gain block 25 dB, 5 V	RFS	Released	3.4.1
BGA2867	IF gain block 27 dB, 5 V	RFS	Released	3.4.1
BGA2869	IF gain block 32.5 dB, 5 V	RFS	Released	3.4.1
NEW: Medium power amplifier MMICs				
BGA7014	Medium power amplifier, 12.0 dB ,13.0 dBm P1dB, SOT89	Dev	Q4 2012	3.4.1
BGA7017	Medium power amplifier, 13.5 dB, 16.5 dBm P1dB, SOT89	Dev	Q4 2012	3.4.1
BGA7020	Medium power amplifier, 13.0 dB, 18.5 dBm P1dB, SOT89	Dev	Q4 2012	3.4.1
BGA7130	Medium power amplifier, 18.0 dB, 30 dBm P1dB, SOT908	RFS	Released	3.4.1
NEW: VGAs for wireless infrastructures				
BGA7351	50 MHz to 250 MHz high linearity variable gain amplifier - 28 dB gain range	RFS	Released	3.4.1
BGA7210	400 MHz to 2750 MHz high linearity variable gain amplifier	RFS	Released	3.4.1
BGA7204	700 MHz to 3800 MHz high linearity variable gain amplifier	RFS	Released	3.4.1
NEW: LNAs for wireless infrastructures				
BGU7051	LNA 900 MHz - from 0.5 to 1.5 GHz	RFS	Released	3.4.1
BGU7052	LNA 1.9 GHz - from 1.5 to 2.5 GHz	RFS	Released	3.4.1
BGU7053	LNA 2.5 GHz - from 2.3 to 2.8 GHz	RFS	Released	3.4.1
BGU7060	LNA with variable gain from 700 to 800 MHz	RFS	Released	3.4.1
BGU7061	LNA with variable gain from 700 to 950 MHz	RFS	Released	3.4.1
BGU7062	LNA with variable gain from 1710 to 1785 MHz	RFS	Released	3.4.1
BGU7063	LNA with variable gain from 1920 to 1980 MHz	RFS	Released	3.4.1

Type	Application / description	Expected status June 2012	Planned release	Section
NEW: PLL + VCO (LO generator) for wireless infrastructures				
BGX7300	Rx LO generator, 400 MHz to 3 GHz	DEV	Q4 2012	3.4.2
NEW: IQ modulators for wireless infrastructures				
BGX7100	IQ modulator, ouput power 0 dBm	RFS	Released	3.4.2
BGX7101	IQ modulator, ouput power 4 dBm	RFS	Released	3.4.2
NEW: Dual mixers for wireless infrastructures				
BGX7220	Dual mixer, NF 8 dB, IIP3 30 dBm, P < 1 W, 700 MHz to 1.2 GHz	RFS	Released	3.4.2
BGX7221	Dual mixer, NF 10 dB, IIP3 23 dBm, P < 1 W, 1.7GHz to 2.7 GHz	RFS	Released	3.4.2
NEW: RF power transistors for base stations				
BLF6G15L(S)-40RN	Gen6 ceramic driver LDMOS transistor for GSM, WCDMA & LTE applications	RFS	Released	3.7.1
BLF6H10L(S)-160	Gen6 ceramic high-voltage LDMOS transistor for GSM, WCDMA & LTE applications	DEV	Q312	3.7.1
BLF7G20LS-260A	Gen7 ceramic asymmetrical Doherty LDMOS transistor for GSM & LTE applications	DEV	Q412	3.7.1
BLF7G24L(S)-160P	Gen7 ceramic push-pull LDMOS transistor for WCDMA & LTE applications	RFS	Released	3.7.1
BLF7G27LS-90PG	Gen7 ceramic push-pull LDMOS transistor for WCDMA & LTE applications (gull-wing)	RFS	Released	3.7.1
BLF8G10L(S)-160V	Gen8 ceramic LDMOS transistor for GSM, WCDMA & LTE applications	RFS	Released	3.7.1
BLF8G10LS-200GV	Gen8 ceramic LDMOS transistor for GSM, WCDMA & LTE applications (gull-wing)	DEV	Q412	3.7.1
BLF8G10LS-270GV	Gen8 ceramic LDMOS transistor for GSM, WCDMA & LTE applications (gull-wing)	DEV	Q412	3.7.1
BLF8G10L(S)-300P	Gen8 ceramic push-pull LDMOS transistor for GSM, WCDMA & LTE applications (gull-wing)	DEV	Q312	3.7.1
BLF8G10LS-400PGV	Gen8 ceramic push-pull LDMOS transistor for GSM, WCDMA & LTE applications (gull-wing)	DEV	Q412	3.7.1
BLF8G20L(S)-200V	Gen8 ceramic LDMOS transistor for GSM & LTE applications	RFS	Released	3.7.1
BLF8G20LS-270GV	Gen8 ceramic LDMOS transistor for GSM & LTE applications (gull-wing)	DEV	Q412	3.7.1
BLF8G20LS-270PGV	Gen8 ceramic push-pull LDMOS transistor for GSM & LTE applications (gull-wing)	DEV	Q412	3.7.1
BLF8G22LS-160BV	Gen8 ceramic LDMOS transistor for WCDMA & LTE applications	RFS	Released	3.7.1
BLF8G22LS-200GV	Gen8 ceramic LDMOS transistor for WCDMA & LTE applications (gull-wing)	DEV	Q312	3.7.1
BLF8G22LS-270GV	Gen8 ceramic LDMOS transistor for WCDMA & LTE applications (gull-wing)	DEV	Q312	3.7.1
BLF8G22LS-400PGV	Gen8 ceramic push-pull LDMOS transistor for WCDMA & LTE applications (gull-wing)	DEV	Q312	3.7.1
BLF8G24L(S)-200P	Gen8 ceramic push-pull LDMOS transistor for WCDMA & LTE applications	DEV	Q312	3.7.1
BLF8G27LS-140G	Gen8 ceramic LDMOS transistor for WCDMA & LTE applications (gull-wing)	DEV	Q412	3.7.1
BLF8G27LS-140V	Gen8 ceramic LDMOS transistor for WCDMA & LTE applications	DEV	Q412	3.7.1
BLF8G27LS-200PGV	Gen8 ceramic push-pull LDMOS transistor for WCDMA & LTE applications (gull-wing)	DEV	Q412	3.7.1
BLF8G27LS-280PGV	Gen8 ceramic push-pull LDMOS transistor for WCDMA & LTE applications (gull-wing)	DEV	Q412	3.7.1
BLM7G22S-60PB(G)	Gen7 LDMOS MMIC for WCDMA applications (gull-wing)	DEV	Q312	3.7.1
BLP7G07S-140P(G)	Gen7 OMP push-pull LDMOS transistor for GSM, WCDMA & LTE applications (gull-wing)	DEV	Q412	3.7.1
BLP7G09S-140P(G)	Gen7 OMP push-pull LDMOS transistor for GSM, WCDMA & LTE applications (gull-wing)	DEV	Q412	3.7.1
BLP7G22-10	Gen7 OMP LDMOS transistor for WCDMA & GSM applications	DEV	Q312	3.7.1
NEW: RF power transistors for broadcast / ISM applications				
BLF174XR(S)	XR ceramic push-pull LDMOS transistor for ISM applications	DEV	Q312	3.7.2
BLF178XR(S)	XR ceramic push-pull LDMOS transistor for FM broadcast & ISM applications	RFS	Released	3.7.2
BLF2425M6L(S)180P	Gen6 ceramic push-pull LDMOS transistor for 2.45 GHz ISM applications	DEV	Q312	3.7.2
BLF2425M7L(S)140	Gen7 ceramic LDMOS transistor for 2.45GHz ISM applications	RFS	Released	3.7.2
BLF2425M7L(S)200	Gen7 ceramic LDMOS transistor for 2.45GHz ISM applications	DEV	Q412	3.7.2
BLF2425M7L(S)250P	Gen7 ceramic push-pull LDMOS transistor for 2.45 GHz ISM applications	RFS	Released	3.7.2
BLF25M612(G)	Gen6 ceramic LDMOS driver transistor for 2.45 GHz ISM applications (gull-wing)	DEV	Q312	3.7.2
BLF572XR(S)	XR ceramic push-pull LDMOS transistor for ISM applications	DEV	Q412	3.7.2
BLF574XR(S)	XR ceramic push-pull LDMOS transistor for ISM applications	DEV	Q312	3.7.2
BLF578XR(S)	XR ceramic push-pull LDMOS transistor for UHF broadcast & ISM applications	RFS	Released	3.7.2
BLF647P(S)	Ceramic push-pull LDMOS transistor for broadband applications	DEV	Q312	3.7.2

Type	Application / description	Expected status June 2012	Planned release	Section
NEW: RF power transistors for aerospace and defense				
BLL6G1214LS-250	Gen6 ceramic LDMOS transistor for L-band applications	RFS	Released	3.7.3
BLL6H1214LS-500	Gen6 high-voltage ceramic LDMOS transistor for L-band applications	DEV	Q412	3.7.3
BLS6G2735L(S)-30	Gen6 ceramic LDMOS driver transistor for S-band radar applications	RFS	Released	3.7.3
BLS7G2729L(S)-350P	Gen7 ceramic push-pull LDMOS transistor for S-band radar applications	RFS	Released	3.7.3
BLS7G3135L(S)-350P	Gen7 ceramic push-pull LDMOS transistor for S-band radar applications	DEV	Q412	3.7.3
BLU6H0410L(S)-600P	Gen6 high-voltage ceramic push-pull LDMOS transistor for UHF band radar applications	RFS	Released	3.7.3
NEW: Gallium Nitride (GaN) RF power amplifiers				
CLF1G0060-10	Gen1 GaN broadband amplifier	DEV	Q113	3.7.4
CLF1G0060-30	Gen1 GaN broadband amplifier	DEV	Q113	3.7.4
CLF1G0035-50	Gen1 GaN broadband amplifier	DEV	Q312	3.7.4
CLF1G0035-100	Gen1 GaN broadband amplifier	DEV	Q412	3.7.4
NEW: Low-power wireless microcontrollers and networking stacks				
JN5142-J01	JenNet-IP	RFS	Released	3.8
JN5142-001	RF4CE / IEEE802.15.4	RFS	Released	3.8
JN5148-J01	JenNet-IP	RFS	Released	3.8
JN5148-001	JenNet / IEEE802.15.4	RFS	Released	3.8
JN5148-Z01	ZigBee	RFS	Released	3.8
JN5148-001-M00	JenNet / IEEE802.15.4	RFS	Released	3.8
JN5148-001-M03	JenNet / IEEE802.15.4	RFS	Released	3.8
JN5148-001-M04	JenNet / IEEE802.15.4	RFS	Released	3.8
JenNet	Networking stack	RFS	Released	3.8
JenNet-IP	Networking stack	RFS	Released	3.8
ZigBee PRO	Networking stack	RFS	Released	3.8

3.2 RF diodes

3.2.1 Varicap diodes

Varicap selection guide on www.nxp.com/varicaps
Easy-to-use parametric filters help you choose
the right varicap for your design.

Why choose NXP's varicap diodes:

- Reference designs for TV and radio tuning
- Direct matching process
- Small tolerances
- Short lead time
- Complete portfolio covering broad range of frequencies and packages (including leadless)
- Reliable volume supply

VCO and FM radio tuning varicap diodes

Type	Package	Number of diodes	Config-uration	@ f = 1 MHz												r_s typ	r_s max	@ f =
				C_d min	C_d typ	C_d max	@ V_R =	C_d min	C_d typ	C_d max	@ V_R =	C_{d1}/C_{d2} min	C_{d1}/C_{d2} max	@ V1 =	@ V2 =			
				(pF)	(pF)	(pF)	(V)	(pF)	(pF)	(pF)	(V)			(V)	(V)	(Ω)	(Ω)	(MHz)
BB145B	SOD523	1	SG	6.4	-	7.2	1	2.55	-	2.95	4	2.2	-	1	4	-	0.6	470
BB156	SOD323	1	SG	14.4	16	17.6	1	4.2	4.8	5.4	7.5	2.7	3.9	1	7.5	0.4	0.7	470
BB198	SOD523	1	SG	25	-	28.5	1	4.8	-	6.8	4	-	-	-	-	-	0.8	100
BB199	SOD523	1	SG	36.5	-	42.5	0.5	11.8	-	13.8	2	2.8	-	0.5	2	0.25	-	100
BB201	SOT23	2	CC	89	95	102	1	25.5	27.6	29.7	7.5	3.1	3.8	1	7.5	0.25	0.5	100
BB202^^	SOD523	1	SG	28.2	-	33.5	0.2	7.2	-	11.2	2.3	2.5	-	0.2	2.3	0.35	0.6	100
BB207^	SOT23	2	CC	76	81	86	1	25.5	27.6	29.7	7.5	2.6	3.3	1	7.5	0.2	0.4	100
BB208-02^	SOD523	1	SG	19.9	-	23.2	1	4.5	-	5.4	7.5	3.7	5.2	1	7.5	0.35	0.5	100
BB208-03^	SOD323	1	SG	19.9	-	23.2	1	4.5	-	5.4	7.5	3.7	5.2	1	7.5	0.35	0.5	100

^ Includes special design for FM car radio (CREST-IC:TEF6860)
^^ Includes special design for mobile phone tuner ICs

Type of connection: CC: common cathode
SG: single

TV / VCR / DVD / HDD varicap diodes - UHF tuning

Type	Package	@ f = 1 MHz									r_s typ	r_s max	@ f =	@ C_d =	$\Delta C_d/C_d$	@ V_1 =	@ V_2 =	@ N_s =
		C_d min	C_d typ	C_d max	@ V_R =	C_{d1}/C_{d2} min	C_{d1}/C_{d2} typ	C_{d1}/C_{d2} max	@ V_1 =	@ V_2 =								
		(pF)	(pF)	(pF)	(V)				(V)	(V)	(Ω)	(Ω)	(MHz)	(pF)		(V)	(V)	
Matched																		
BB149	SOD323	1.9	2.1	2.25	28	8.2	9	10	1	28	-	0.75	470	9	2	0.5	28	10
BB149A	SOD323	1.951	2.1	2.225	28	8.45	9	10.9	1	28	0.6	0.75	470	9	2	1	28	10
BB179	SOD523	1.951	2.1	2.225	28	8.45	9	10.9	1	28	0.6	0.75	470	9	2	1	28	10
BB179B	SOD523	1.9	2.1	2.25	28	8.45	9	10	1	28	0.6	0.75	470	9	2	1	28	10
BB179BLX	SOD882D	1.9	-	2.25	28	-	9	-	1	28	0.65	-	470	9	2	1	28	10
BB179LX	SOD882D	1.95	2.1	2.22	28	8.45	9	10.9	1	28	0.65	-	470	30	2	1	28	5
BB184	SOD523	1.87	2	2.13	10	6	7	-	1	10	0.65	-	470	9	2	1	10	5
BB189	SOD523	1.89	2.04	2.18	25	6.3	7.3	-	2	25	0.65	0.7	470	9	1.8	2	25	10
Unmatched																		
BB135	SOD323	1.7	-	2.1	28	8.9	-	12	0.5	28	-	0.75	470	9	-	-	-	-

Bold = highly recommended product

TV / VCR / DVD / HDD varicap diodes - VHF tuning

Type	Package	@ f = 1 MHz									r_s typ	r_s max	@ f =	@ C_d =	$\Delta C_d/C_d$	@ V_1 =	@ V_2 =	@ N_s =
		C_d min	C_d typ	C_d max	@ V_R =	C_{d1}/C_{d2} min	C_{d1}/C_{d2} typ	C_{d1}/C_{d2} max	@ V_1 =	@ V_2 =								
		(pF)	(pF)	(pF)	(V)				(V)	(V)	(Ω)	(Ω)	(MHz)	(pF)		(V)	(V)	
Matched																		
BB148	SOD323	2.4	2.6	2.75	28	14.5	15	-	1	28	-	0.9	100	12	2	0.5	28	10
BB152	SOD323	2.48	2.7	2.89	28	20.6	22	-	1	28	1	1.2	100	30	2	1	28	10
BB153	SOD323	2.361	2.6	2.754	28	13.5	15	-	1	28	0.65	0.8	100	30	2	1	28	10
BB178	SOD523	2.361	2.6	2.754	28	13.5	15	-	1	28	0.65	0.8	100	30	2	1	28	10
BB178LX	SOD882D	2.36	2.6	2.75	28	13.5	15	-	1	28	0.7	-	470	30	2	1	28	5
BB182	SOD523	2.48	2.7	2.89	28	20.6	22	-	1	28	1	1.2	100	30	2	1	28	10
BB187	SOD523	2.57	2.75	2.92	25	11	-	-	2	25	-	0.75	470	-	2	2	25	10
BB187LX	SOD882D	2.57	2.75	2.92	25	11	-	-	2	25	-	0.75	470	-	2	2	25	10
Unmatched																		
BB131	SOD323	0.7	-	1.055	28	12	-	16	0.5	28	-	3	470	9	-	-	-	-
BB181	SOD523	0.7	-	1.055	28	12	-	16	0.5	28	-	3	470	9	-	-	-	-
BBY40	SOT23	4.3	-	6	25	5	-	6.5	3	25	-	0.7	200	25	-	-	-	-

3.2.2 PIN diodes

PIN diode selection guide on www.nxp.com/pindiodes
Easy-to-use parametric filters help you choose the right PIN diode for your design.

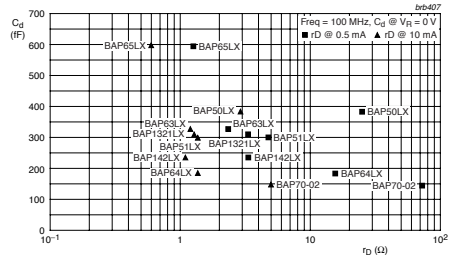

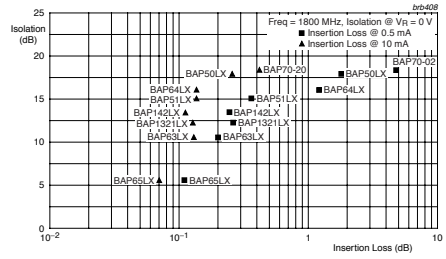

Why choose NXP's PIN diodes:

- Broad portfolio
- Unrivalled performance
- Short lead time
- Low series inductance
- Low insertion loss
- Low capacitance

For more information: www.nxp.com/pindiodes

PIN diodes: typical r_D @ 1 mA ≤ 2, switching diodes

Type	Package	Number of diodes	Config	V_R max (V)	IF max (mA)	@ f = 100 MHz						@ f = 1 MHz				
						@ IF = 0.5 mA		@ IF = 1 mA		@ IF = 10 mA		@ V_R = 0 V	@ V_R = 1 V		@ V_R = 20 V	
						r_D typ (Ω)	r_D max (Ω)	r_D typ (Ω)	r_D max (Ω)	r_D typ (Ω)	r_D max (Ω)	C_d typ (pF)	C_d typ (pF)	C_d max (pF)	C_d typ (pF)	C_d max (pF)
BAP65LX	SOD882D	1	SG	30	100	-	-	0.94	-	0.49	0.9	0.61	0.48	0.85	0.37	-
BAP65-02	SOD523	1	SG	30	100	-	-	1	-	0.56	0.9	0.65	0.55	0.9	0.375	-
BAP65-03	SOD323	1	SG	30	100	-	-	1	-	0.56	0.9	0.65	0.55	0.9	0.375	-
BAP65-05	SOT23	2	CC	30	100	-	-	1	-	0.56	0.9	0.7	0.575	0.9	0.425	-
BAP65-05W	SOT323	2	CC	30	100	-	-	1	-	0.56	0.9	0.7	0.575	0.9	0.425	-
BAP63LX	SOD882D	1	SG	50	100	2.3	3.3	1.87	3	1.19	1.8	0.34	0.29	-	0.24	0.3
BAP63-02	SOD523	1	SG	50	100	2.5	3.5	1.95	3	1.17	1.8	0.36	0.32	-	0.25	0.32
BAP63-03	SOD323	1	SG	50	100	2.5	3.5	1.95	3	1.17	1.8	0.4	0.35	-	0.27	0.32
BAP63-05W	SOT323	2	CC	50	100	2.5	3.5	1.95	3	1.17	1.8	0.4	0.35	-	0.3	0.35

PIN diode: selection on isolation and insertion loss in SOD882D

Type	ISL (isolation)			IL (Insertion loss)											
	f = 900 MHz	f = 1800 MHz	f = 2450 MHz	f = 900 MHz				f = 1800 MHz				f = 2450 MHz			
	VR = 0 V	VR = 0 V	VR = 0 V	IF = 0.5 mA	IF = 1 mA	IF = 10 mA	IF = 100 mA	IF = 0.5 mA	IF = 1 mA	IF = 10 mA	IF = 100 mA	IF = 0.5 mA	IF = 1 mA	IF = 10 mA	IF = 100 mA
BAP65LX	10	5.5	3.9	0.09	0.06	0.06	0.05	0.09	0.07	0.07	0.06	0.10	0.08	0.08	0.07
BAP63LX	15.9	10.5	8.3	0.20	0.17	0.12	0.11	0.20	0.17	0.13	0.11	0.21	0.19	0.15	0.15
BAP55LX	19	14	12	0.24	0.17	0.08	0.05	0.25	0.18	0.09	0.07	0.26	0.19	0.10	0.08
BAP1321LX	17	12	10	0.25	0.19	0.11	0.09	0.26	0.20	0.13	0.11	0.27	0.21	0.14	0.12
BAP142LX	18	13	11	0.24	0.18	0.10	0.07	0.24	0.19	0.11	0.09	0.25	0.25	0.12	0.10
BAP51LX	19	15	13	0.36	0.25	0.12	0.90	0.36	0.26	0.14	0.10	0.38	0.27	0.15	0.12
BAP64LX	22	16	14	1.22	0.22	0.12	0.09	1.21	0.23	0.13	0.10	1.22	0.24	0.15	0.11
BAP50LX	20.3	17.9	16.5	1.82	1.07	0.25	-	1.80	1.06	0.26	-	1.81	1.08	0.27	-

Bold = highly recommended product

PIN diodes: typical r_D @ 1 mA = 2.2 - 2.4, switching diodes

Type	Package	Number of diodes	Config	V_R max (V)	IF max (mA)	@ f = 100 MHz						@ f = 1 MHz				
						@ IF = 0.5 mA		@ IF = 1 mA		@ IF = 10 mA		@ V_R = 0 V	@ V_R = 1 V		@ V_R = 20 V	
						r_D typ (Ω)	r_D max (Ω)	r_D typ (Ω)	r_D max (Ω)	r_D typ (Ω)	r_D max (Ω)	C_d typ (pF)	C_d typ (pF)	C_d max (pF)	C_d typ (pF)	C_d max (pF)
BAP55LX	SOD882D	1	SG	50	100	3.3	4.5	2.2	3.3	0.8	1.2	0.28	0.23	-	0.18	0.28
BAP1321-02	SOD523	1	SG	60	100	3.4	5	2.4	3.6	1.2	1.8	0.4	0.35	0.45	0.25	0.32
BAP1321-03	SOD323	1	SG	60	100	3.4	5	2.4	3.6	1.2	1.8	0.4	0.35	0.45	0.25	0.32
BAP1321-04	SOT23	2	SR	60	100	3.4	5	2.4	3.6	1.2	1.8	0.42	0.375	0.45	0.275	0.325
BAP1321LX	SOD882D	1	SG	60	100	3.3	5	2.4	3.6	1.2	1.8	0.32	0.27	0.38	0.21	0.28
BAP142LX	SOD882D	1	SG	50	100	3.3	5	2.4	3.6	1	1.8	0.25	0.22	-	0.16	0.26

PIN diodes: typical r_D @ 1 mA = 3.2 - 3.6, switching diodes

Type	Package	Number of diodes	Config	V_R max (V)	IF max (mA)	@ f = 100 MHz						@ f = 1 MHz				
						@ IF = 0.5 mA		@ IF = 1 mA		@ IF = 10 mA		@ V_R = 0 V	@ V_R = 1 V		@ V_R = 20 V	
						r_D typ (Ω)	r_D max (Ω)	r_D typ (Ω)	r_D max (Ω)	r_D typ (Ω)	r_D max (Ω)	C_d typ (pF)	C_d typ (pF)	C_d max (pF)	C_d typ (pF)	C_d max (pF)
BAP51LX	SOD882D	1	SG	60	100	4.9	9	3.2	6.5	1.4	2.5	0.3	0.22	0.4	0.17	0.3
BAP51-02	SOD523	1	SG	60	50	5.5	9	3.6	6.5	1.5	2.5	0.4	0.3	0.55	0.2	0.35
BAP51-03	SOD323	1	SG	50	50	5.5	9	3.6	6.5	1.5	2.5	0.4	0.3	0.55	0.2	0.35
BAP51-04W	SOT323	2	SR	50	50	5.5	9	3.6	6.5	1.5	2.5	0.4	0.3	0.55	0.2	0.35
BAP51-05W	SOT323	2	CC	50	50	5.5	9	3.6	6.5	1.5	2.5	0.4	0.3	0.55	0.2	0.35
BAP51-06W	SOT323	2	CA	50	50	5.5	-	3.6	-	2	-	0.4	0.3	-	0.2	-

PIN diodes: typical r_D @ 1 mA = 10, attenuator/switching diodes

Type	Package	Number of diodes	Config	V_R max (V)	IF max (mA)	@ f = 100 MHz						@ f = 1 MHz				
						@ IF = 0.5 mA		@ IF = 1 mA		@ IF = 10 mA		@ V_R = 0 V	@ V_R = 1 V		@ V_R = 20 V	
						r_D typ (Ω)	r_D max (Ω)	r_D typ (Ω)	r_D max (Ω)	r_D typ (Ω)	r_D max (Ω)	C_d typ (pF)	C_d typ (pF)	C_d max (pF)	C_d typ (pF)	C_d max (pF)
BAP64Q	SOT753	4	SR	100	100	20	40	10	20	2	3,8	0.52	0.37	-	0.23	0.35
BAP64-02	SOD523	1	SG	175	100	20	40	10	20	2	3.8	0.48	0.35	-	0.23	0.35
BAP64-03	SOD323	1	SG	175	100	20	40	10	20	2	3.8	0.48	0.35	-	0.23	0.35
BAP64-04	SOT23	2	SR	175	100	20	40	10	20	2	3.8	0.52	0.37	-	0.23	0.35
BAP64-04W	SOT323	2	SR	100	100	20	40	10	20	2	3.8	0.52	0.37	-	0.23	0.35
BAP64-05	SOT23	2	CC	175	100	20	40	10	20	2	3.8	0.52	0.37	-	0.23	0.35
BAP64-05W	SOT323	2	CC	100	100	20	40	10	20	2	3.8	0.52	0.37	-	0.23	0.35
BAP64-06	SOT23	2	CA	175	100	20	40	10	20	2	3.8	0.52	0.37	-	0.23	0.35
BAP64-06W	SOT323	2	CA	100	100	20	40	10	20	2	3.8	0.52	0.37	-	0.23	0.35
BAP64LX^	SOD882D	1	SG	60	100	31	50	16	26	2.6	4.4	0.48	0.34	-	0.17*	0.3*

^ = attenuator / switching diode *= @ VR = 20 V

PIN diodes: typical r_D @ 1 mA = 14 - 16, attenuator diodes

Type	Package	Number of diodes	Config	V_R max (V)	IF max (mA)	@ f = 100 MHz						@ f = 1 MHz				
						@ IF = 0.5 mA		@ IF = 1 mA		@ IF = 10 mA		@ V_R = 0 V	@ V_R = 1 V		@ V_R = 5 V	
						r_D typ (Ω)	r_D max (Ω)	r_D typ (Ω)	r_D max (Ω)	r_D typ (Ω)	r_D max (Ω)	C_d typ (pF)	C_d typ (pF)	C_d max (pF)	C_d typ (pF)	C_d max (pF)
BAP50-02	SOD523	1	SG	50	50	25	40	14	25	3	5	0.4	0.3	0.55	0.22	0.35
BAP50-03	SOD323	1	SG	50	50	25	40	14	25	3	5	0.4	0.3	0.55	0.2	0.35
BAP50-04	SOT23	2	SR	50	50	25	40	14	25	3	5	0.45	0.35	0.6	0.3	0.5
BAP50-04W	SOT323	2	SR	50	50	25	40	14	25	3	5	0.45	0.35	0.6	0.3	0.5
BAP50-05	SOT23	2	CC	50	50	25	40	14	25	3	5	0.45	0.3	0.5	0.35	0.6
BAP50-05W	SOT323	2	CC	50	50	25	40	14	25	3	5	0.45	0.35	0.6	0.3	0.5
BAP50LX	SOD882D	1	SG	50	50	26	40	14	25	3	5	0.4	0.28	0.55	0.19	0.35

PIN diodes: typical r_D @ 1 mA = 40, attenuator diodes

Type	Package	Number of diodes	Config	V_R max (V)	IF max (mA)	@ f = 100 MHz						@ f = 1 MHz				
						@ IF = 0.5 mA		@ IF = 1 mA		@ IF = 10 mA		@ V_R = 0 V	@ V_R = 1 V		@ V_R = 20 V	
						r_D typ (Ω)	r_D max (Ω)	r_D typ (Ω)	r_D max (Ω)	r_D typ (Ω)	r_D max (Ω)	C_d typ (pF)	C_d typ (pF)	C_d max (pF)	C_d max (pF)	C_d typ (pF)
BAP70Q	SOT753	4	SR	50	100	77	100	40	50	5.4	7	0.6	0.43	-	0.25	0.3
BAP70-02	SOD523	1	SG	50	100	77	100	40	50	5.4	7	0.57	0.4	-	0.2	0.25
BAP70-03	SOD323	1	SG	50	100	77	100	40	50	5.4	7	0.57	0.4	-	0.2	0.25
BAP70-04W	SOT323	2	SR	50	100	77	100	40	50	5.4	7	0.6	0.43	-	0.25	0.3
BAP70-05	SOT23	2	CC	50	100	77	100	40	50	5.4	7	0.6	0.43	-	0.25	0.3
BAP70AM	SOT363	4	SR	50	100	77	100	40	50	5.4	7	0.57	0.4	-	0.2	0.25

Bold = highly recommended product

SG = single
SR = series
CC = common cathode
CA = common anode

3.2.3 Band-switch diodes

Why choose NXP's band-switch diodes:

- Reliable volume supplier
- Short lead time
- Low series inductance
- Low insertion loss
- Low capacitance
- High reverse isolation

Type	Package	V_R max (V)	IF max (mA)	r_D max (Ω)	@ IF = (mA)	@ f = (MHz)	C_d max (pF)	@ V_R = (V)	@ f = (MHz)
BA277	SOD523	35	100	0.7	2	100	1.2	6	1
BA591	SOD323	35	100	0.7	3	100	0.9	3	1
BA891	SOD523	35	100	0.7	3	100	0.9	3	1
BAT18	SOT23	35	100	0.7	5	200	1	20	1

3.2.4 Schottky diodes

Schottky diode selection guide on www.nxp.com/rfschottkydiodes
Easy-to-use parametric filters help you choose the right Schottky diode for your design.

Why choose NXP's Schottky diodes:

- Low diode capacitance
- Low forward voltage
- Single- and triple-isolated diode
- Small package

Applications

- Digital applications:
  - Ultra high-speed switching
  - Clamping circuits
- RF applications:
  - Diode ring mixer
  - RF detector
  - RF voltage doubler

Low-capacitance Schottky diodes

Type	Package	Configuration	V_R max. (V)	I_F max. (mA)	V_F max. (mV)	C_D max. (pF)
BAT17	SOT23	Single	4	30	450 @ IF = 1 mA	1 @ VR = 0 V
PMBD353	SOT23	Dual-series	4	30	450 @ IF = 1 mA	1 @ VR = 0 V
PMBD354^	SOT23	Dual-series	4	30	450 @ IF = 1 mA	1 @ VR = 0 V
1PS76SB17	SOD323	Single	4	30	450 @ IF = 1 mA	1 @ VR = 0 V
1PS66SB17	SOT666	Triple-isolated	4	30	450 @ IF = 1 mA	1 @ VR = 0 V
1PS79SB17	SOD523	Single	4	30	450 @ IF = 1 mA	1 @ VR = 0 V
1PS88SB82	SOT363	Triple-isolated	15	30	340 @ IF = 1 mA	1 @ VR = 0 V
1PS70SB82	SOT323	Single	15	30	340 @ IF = 1 mA	1 @ VR = 0 V
1PS70SB84	SOT323	Dual-series	15	30	340 @ IF = 1 mA	1 @ VR = 0 V
1PS70SB85	SOT323	Dual c.c	15	30	340 @ IF = 1 mA	1 @ VR = 0 V
1PS70SB86	SOT323	Dual c.a.	15	30	340 @ IF = 1 mA	1 @ VR = 0 V
1PS66SB82	SOT666	Triple-isolated	15	30	340 @ IF = 1 mA	1 @ VR = 0 V
1PS10SB82	SOD882	Single	15	30	340 @ IF = 1 mA	1 @ VR = 0 V

Bold = highly recommended product ^ Diodes have matched capacitance

3.3 RF Bipolar transistors

3.3.1 Wideband transistors

RF wideband transistor selection guide on www.nxp.com/rftransistors
Easy-to-use parametric filters help you choose the right RF wideband transistor for your design.

Why choose NXP's wideband transistors:

- Broad portfolio (1st - 7th generation)
- Short lead time
- Smallest packages
- Volume delivery

Wideband transistors

The f_T-I_C curve represents transition frequency (f_T) characteristics as a function of collector current (I_C) for the seven generations of RF wideband transistors. A group of transistors having the same I_C and similar f_T represents a curve. The curve number matches with products in the selection tables of this section (third column of each table), detailing their RF characteristics.

Wideband transistors line-up per frequency

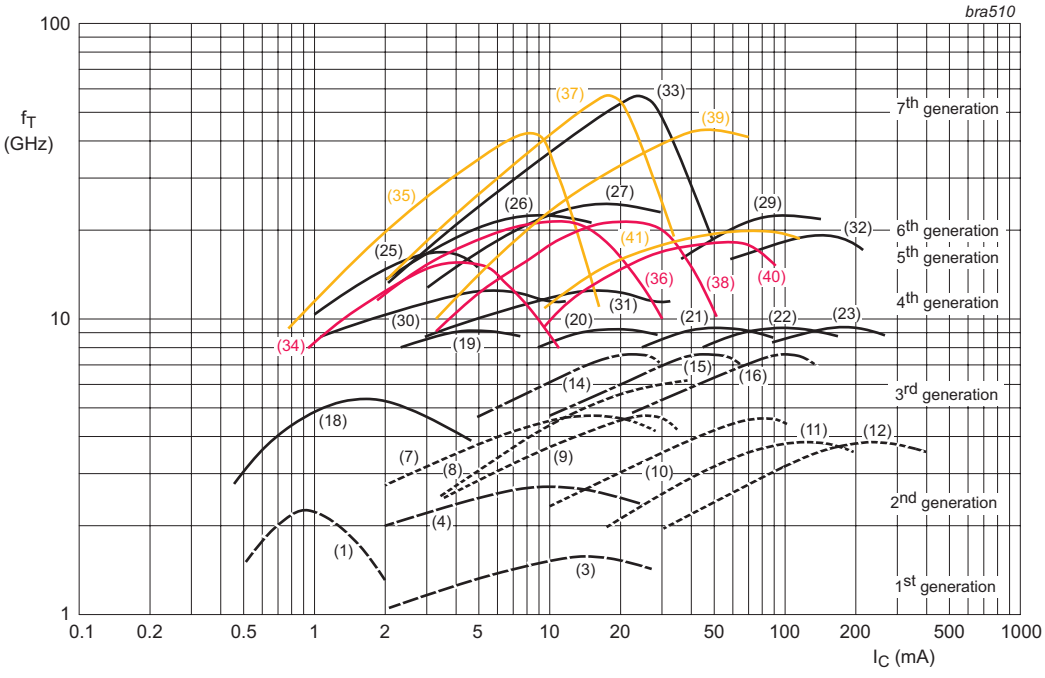

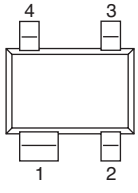

Figure 1

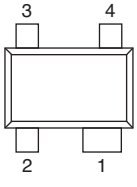

Figure 2

Pin	Description
	Type (Figure 1)
1	Collector
2	Base
3	Emitter
4	Emitter
	Type/X (Figure 1)
1	Collector
2	Emitter
3	Base
4	Emitter
	Type/XR (Figure 2)
1	Collector
2	Emitter
3	Base
4	Emitter

Wideband transistors

Function	LNAs, mixers, frequency multipliers, buffers			High-linearity, high-output amplifiers and drivers			Oscillators		
Frequency range	<6 GHz	6 GHz – 12 GHz	12 GHz – +18 GHz	<6 GHz	6 GHz – 12 GHz	12 GHz – 18 GHz	<6 GHz	6 GHz – 12 GHz	12 GHz – +18 GHz
Type \ Band	L,S,C	X, Ku low	Ku high, Ka	L,S,C	X, Ku low	Ku high	L,S,C	X, Ku low	Ku high, Ka
BFU610F	•	•							•
BFU630F	•	•		•			•		•
BFU660F	•			•			•	•	
BFU690F	•			•			•	•	
BFU725F/N1	•	•	•	•	•		•		•
BFU710F	•	•	•						•
BFU730F	•	•	•	•	•	•	•		•
BFU760F	•	•		•	•		•		
BFU790F	•			•			•		

Red = application note available on NXP.com

RF power transistors for portable equipment (VHF)

Type	Package	V_{CEO} (max) (V)	I_C (max) (mA)	P_{tot} (max) (mW)	Polarity	GUM (typ) (dB)	@ f = (MHz)	@ I_C = (mA)	@ V_{CE} = (V)
BFG10	SOT143	8	250	400	NPN	7	1900	1	3.6
BFG10/X	SOT143	8	250	400	NPN	7	1900	1	3.6
BFG10W/X	SOT343	10	250	400	NPN	7	1900	1	3.6
BLT50	SOT223	10	500	2000	NPN	-	-	-	-
BLT70	SOT223H	8	250	2100	NPN	-	-	-	-
BLT80	SOT223	10	250	2000	NPN	-	-	-	-
BLT81	SOT223	9.5	500	2000	NPN	-	-	-	-

RF wideband transistors generations 1 to 3

Type	Generation	Curve	Package	f_T (typ) (GHz)	V_{CEO} (max) (V)	I_C (max) (mA)	P_{tot} (max) (mW)	Polarity	GUM (typ) (dB)	@ f = (MHz)	@ I_C = (mA)	@ V_{CE} = (V)	GUM (typ) (dB)	@ f = (MHz)	@ I_C = (mA)	@ V_{CE} = (V)	NF (typ) (dB)	@ f = (MHz)	@ I_C = (mA)	@ V_{CE} = (V)	NF (typ) (dB)	@ f = (MHz)	@ I_C = (mA)	@ V_{CE} = (V)
BFS17	1	3	SOT23	1	15	25	300	NPN	-	-	-	-	-	-	-	-	4.5	500	2	5	-	-	-	-
BFS17W	1	3	SOT323	1.6	15	50	300	NPN	-	-	-	-	-	-	-	-	4.5	500	2	5	-	-	-	-
BFT25	1	1	SOT23	2.3	5	6.5	30	NPN	18	500	1	1	12	800	1	1	3.8	500	1	1	-	-	-	-
BFG25A/X	2	18	SOT143B	5	5	6.5	32	NPN	-	-	-	-	18	1000	0.5	1	1.8	1000	0.5	1	-	-	-	-
BFG25AW	2	18	SOT343N	5	5	6.5	500	NPN	-	-	-	-	16	2000	0.5	1	2	1000	1	1	-	-	-	-
BFG25AW/X	2	18	SOT343N	5	5	6.5	500	NPN	16	1000	0.5	1	8	2000	0.5	1	2	1000	1	1	-	-	-	-
BFG31	2	10	SOT223	5	-15	-100	1000	PNP	16	500	-70	-10	12	800	-70	-10	-	-	-	-	-	-	-	-
BFG35	2	11	SOT223	4	18	150	1000	NPN	15	500	100	10	11	800	100	10	-	-	-	-	-	-	-	-
BFG92A/X	2	7	SOT143B	5	15	25	400	NPN	16	1000	15	10	11	2000	15	10	2	1000	5	10	3	2000	5	10
BFG97	2	10	SOT223	5.5	15	100	1000	NPN	16	500	70	10	12	800	70	10	-	-	-	-	-	-	-	-
BFQ149	2	10	SOT89	5	-15	-100	1000	PNP	12	500	-50	-10	-	-	-	-	3.75	500	-50	-10	-	-	-	-
BFQ18A	2	11	SOT89	4	18	150	1000	NPN	-	-	-	-	-	-	-	-	-	-	-	-	-	-	-	-
BFQ19	2	10	SOT89	5.5	15	100	1000	NPN	11.5	500	50	10	7.5	800	50	10	3.3	500	50	10	-	-	-	-
BFR106	2	10	SOT23	5	15	100	500	NPN	-	-	-	-	11.5	800	30	6	3.5	800	30	6	-	-	-	-
BFR92A	2	7	SOT23	5	15	25	300	NPN	14	1000	15	10	8	2000	15	10	3	2000	5	10	2.1	1000	5	10
BFR92AW	2	7	SOT323	5	15	25	300	NPN	14	1000	15	10	8	2000	15	10	2	1000	5	10	3	2000	5	10
BFS17A	2	4	SOT23	2.8	15	25	300	NPN	-	-	-	-	13.5	800	14	10	2.5	800	2	5	-	-	-	-
BFS25A	2	18	SOT323	5	5	6.5	32	NPN	-	-	-	-	13	1000	0.5	1	1.8	1000	1	1	-	-	-	-
BFT25A	2	18	SOT23	5	5	6.5	32	NPN	-	-	-	-	15	1000	0.5	1	1.8	1000	0.5	1	-	-	-	-
BFT92	2	7	SOT23	5	-15	-25	300	PNP	18	500	-14	-10	-	-	-	-	2.5	500	-5	-10	-	-	-	-
BFT92W	2	7	SOT323	4	-15	-35	300	PNP	17	500	-15	-10	11	1000	-15	-10	2.5	500	-5	-10	3	1000	-5	-10
BFT93	2	9	SOT23	5	-12	-35	300	PNP	16.5	500	-30	-5					2.4	500	-10	-5	-	-	-	-
BFT93W	2	9	SOT323	4	-12	-50	300	PNP	15.5	500	-30	-5	10	1000	-30	-5	2.4	500	-10	-5	3	1000	-10	-5
BFG135	3	16	SOT223	7	15	150	1000	NPN	16	500	100	10	12	800	100	10	-	-	-	-	-	-	-	-
BFG198	3	15	SOT223	8	10	100	1000	NPN	18	500	50	8	15	800	50	8	-	-	-	-	-	-	-	-
BFG590	3	22	SOT143B	5	15	200	400	NPN	13	900	80	4	7.5	2000	80	4	-	-	-	-	-	-	-	-
BFG590/X	3	22	SOT143B	5	15	200	400	NPN	13	900	80	4	7.5	2000	80	4	-	-	-	-	-	-	-	-
BFG591	3	22	SOT223	7	15	200	2000	NPN	13	900	70	12	7.5	2000	70	12	-	-	-	-	-	-	-	-
BFG67	3	14	SOT143B	8	10	50	380	NPN	17	1000	15	8	10	2000	15	8	1.7	1000	15	8	2.5	2000	5	8
BFG67/X	3	14	SOT143B	8	10	50	380	NPN	17	1000	15	8	10	2000	15	8	1.7	1000	15	8	2.5	2000	5	8
BFG93A	3	8	SOT143B	6	12	35	300	NPN	16	1000	30	8	10	2000	30	8	1.7	1000	5	8	2.3	2000	5	8
BFG93A/X	3	8	SOT143B	6	12	35	300	NPN	16	1000	30	8	10	2000	30	8	1.7	1000	5	8	2.3	2000	5	8
BFG94	3	8	SOT223	6	12	60	700	NPN	-	-	-	-	13.5	1000	45	10	2.7	500	45	10	3	1000	45	10
BFQ591	3	22	SOT89	7	15	200	2250	NPN	11	900	70	12	5.5	2000	70	12	-	-	-	-	-	-	-	-
BFQ67W	3	14	SOT323	8	10	50	300	NPN	13	1000	15	8	8	2000	15	8	1.3	1000	5	8	2.7	2000	15	8
BFR93A	3	8	SOT23	6	12	35	300	NPN	13	1000	30	8	7	2000	30	8	1.9	1000	5	8	3	2000	5	8
BFR94A^	3	8	SOT23	6	12	35	300	NPN	13	1000	30	8	7	2000	30	8	1.9	1000	5	8	3	2000	5	8
BFR93AR	3	8	SOT23	6	12	35	300	NPN	13	1000	30	8	7	2000	30	8	1.9	1000	5	8	3	2000	5	8
BFR93AW	3	8	SOT323	5	12	35	300	NPN	13	1000	30	8	8	2000	30	8	1.5	1000	5	8	2.1	2000	5	8
BFR94AW^	3	8	SOT323	5	12	35	300	NPN	13	1000	30	8	8	2000	30	8	1.5	1000	5	8	2.1	2000	5	8

Bold = highly recommended product ^ AEC-Q101 qualified (some limitations apply)

RF wideband transistors generations 4 and 4.5

Type	Generation	Curve	Package	f_T (typ) (GHz)	V_{CEO} (max) (V)	I_C (max) (mA)	P_{tot} (max) (mW)	Polarity	GUM (typ) (dB)	@ f = (MHz)	@ I_C = (mA)	@ V_{CE} = (V)	NF (typ) (dB)	@ f = (MHz)	@ I_C = (mA)	@ V_{CE} = (V)	NF (typ) (dB)	@ f = (MHz)	@ I_C = (mA)	@ V_{CE} = (V)	PL(1dB) (typ) (dBmW)	@ V_{CE} = (V)	@ f = (MHz)	@ I_C = (mA)	IP3 (typ) (dBm)	@ IC = (mA)	@ VCE = (V)
BFG505	4	19	SOT143B	9	15	18	150	NPN	13	2000	5	6	1.6	900	5	6	1.9	2000	1.25	6	4	6	900	5	10	5	6
BFG505/X	4	19	SOT143B	9	15	18	150	NPN	13	2000	5	6	1.6	900	5	6	1.9	2000	1.25	6	4	6	900	5	10	5	6
BFG505W	4	19	SOT343N	9	15	18	500	NPN	12	2000	5	6	1.6	900	5	6	1.9	2000	1.25	6	4	6	900	5	10	5	6
BFG505W/X	4	19	SOT343N	9	15	18	500	NPN	12	2000	5	6	1.6	900	5	6	1.9	2000	1.25	6	4	6	900	5	10	5	6
BFG505W/XR	4	19	SOT343R	9	15	18	500	NPN	12	2000	5	6	1.6	900	5	6	1.9	2000	1.25	6	4	6	900	5	10	5	6
BFG520	4	20	SOT143B	9	15	70	300	NPN	13	2000	20	6	1.6	900	20	6	1.9	2000	5	6	17	6	900	20	26	20	6
BFG520/X	4	20	SOT143B	9	15	70	300	NPN	13	2000	20	6	1.6	900	20	6	1.9	2000	5	6	17	6	900	20	26	20	6
BFG520/XR	4	20	SOT143R	9	15	70	300	NPN	13	2000	20	6	1.6	900	20	6	1.9	2000	5	6	17	6	900	20	26	20	6
BFG520W	4	20	SOT343N	9	15	70	500	NPN	11	2000	20	6	1.1	900	5	6	1.85	2000	5	6	17	6	900	20	26	20	6
BFG520W/X	4	20	SOT343N	9	15	70	500	NPN	11	2000	20	6	1.1	900	5	6	1.85	2000	5	6	17	6	900	20	26	20	6
BFG540	4	21	SOT143B	9	15	120	400	NPN	11	2000	40	8	1.3	900	10	8	2.1	2000	10	8	21	8	900	40	34	40	8
BFG540/X	4	21	SOT143B	9	15	120	400	NPN	11	2000	40	8	1.3	900	10	8	2.1	2000	10	8	21	8	900	40	34	40	8
BFG540/XR	4	21	SOT143R	9	15	120	400	NPN	11	2000	40	8	1.3	900	10	8	2.1	2000	10	8	21	8	900	40	34	40	8
BFG540W	4	21	SOT343N	9	15	120	500	NPN	10	2000	40	8	1.3	900	10	8	2.1	2000	10	8	21	8	900	40	34	40	8
BFG540W/X	4	21	SOT343N	9	15	120	500	NPN	10	2000	40	8	1.3	900	10	8	2.1	2000	10	8	21	8	900	40	34	40	8
BFG540W/XR	4	21	SOT343R	9	15	120	500	NPN	10	2000	40	8	1.3	900	10	8	2.1	2000	10	8	21	8	900	40	34	40	8
BFG541	4	21	SOT223	9	15	120	650	NPN	9	2000	40	8	1.3	900	10	8	2.1	2000	10	8	21	8	900	40	34	40	8
BFM505	4	19	SOT363A	9	8	18	500	NPN	10	2000	5	3	1.1	900	1	3	1.9	2000	5	3	-	-	-	-	-	-	-
BFM520	4	20	SOT363A	9	8	70	1000	NPN	9	2000	20	3	1.2	900	5	3	1.9	2000	5	3	-	-	-	-	-	-	-
BFQ540	4	21	SOT89	9	15	120	1,200	NPN	-	-	-	-	1.9	900	40	8	-	-	-	-	-	-	-	-	-	-	-
BFQ67	4	14	SOT23	8	10	50	300	NPN	8	2000	15	8	1.7	1000	15	8	2.7	2000	15	8	-	-	-	-	-	-	-
BFR505	4	19	SOT23	9	15	18	150	NPN	10	2000	5	6	1.2	900	5	6	1.9	2000	5	6	4	6	900	5	10	5	6
BFR505T	4	19	SOT416	9	15	18	150	NPN	10	2000	5	6	1.2	900	1.25	6	1.9	2000	1.25	6	5	6	900	5	10	5	6
BFR520	4	20	SOT23	9	15	70	300	NPN	9	2000	20	6	1.1	900	5	6	1.9	2000	5	6	17	6	900	20	26	20	6
BFR520T	4	20	SOT416	9	15	70	150	NPN	9	2000	20	6	1.1	900	5	6	1.9	2000	5	6	17	6	900	20	26	20	6
BFR540	4	21	SOT23	9	15	120	500	NPN	7	2000	40	8	1.3	900	10	8	2.1	2000	10	8	21	8	900	40	34	40	8
BFS505	4	19	SOT323	9	15	18	150	NPN	10	2000	5	6	1.2	900	1.25	6	1.9	2000	1.25	6	4	6	900	5	10	5	6
BFS520	4	20	SOT323	9	15	70	300	NPN	9	2000	20	6	1.1	900	5	6	1.9	2000	5	6	17	6	900	20	26	20	6
BFS540	4	21	SOT323	9	15	120	500	NPN	8	2000	40	8	1.3	900	10	8	2.1	2000	10	8	21	8	900	40	34	40	8
PBR941	4	20	SOT23	8	10	50	360	NPN	9.5	2000	15	6	1.4	1000	5	6	2	2000	5	6	-	-	-	-	-	-	-
PBR951	4	21	SOT23	8	10	100	365	NPN	8	2000	30	6	1.3	1000	5	6	2	2000	5	6	-	-	-	-	-	-	-
PRF947	4	20	SOT323	8.5	10	50	250	NPN	10	2000	15	6	1.5	1000	5	6	2.1	2000	5	6	-	-	-	-	-	-	-
PRF949	4	20	SOT416	9	10	50	150	NPN	10	2000	15	6	1.5	1000	5	6	2.1	2000	5	6	-	-	-	-	-	-	-
PRF957	4	21	SOT323	8.5	10	100	270	NPN	9.2	2000	30	6	1.3	1000	5	6	1.8	2000	5	6	-	-	-	-	-	-	-
BFG310/XR	4.5	30	SOT143R	14	6	10	60	NPN	18	1800	5	3	-	-	-	-	1	2000	1	3	1.8	3	1800	5	8.5	5	3
BFG310W/XR	4.5	30	SOT343R	14	6	10	60	NPN	18	1800	5	3	-	-	-	-	1	2000	1	3	1.8	3	1800	5	8.5	5	3
BFG325/XR	4.5	31	SOT143R	14	6	35	210	NPN	18.3	1800	15	3	-	-	-	-	1.1	2000	3	3	8.7	3	1800	15	19.4	15	3
BFG325W/XR	4.5	31	SOT343R	14	6	35	210	NPN	18.3	1800	15	3	-	-	-	-	1.1	2000	3	3	8.7	3	1800	15	19.4	15	3

RF wideband transistors generations 5 to 7

Type	Generation	Curve	Package	f_T (typ) (GHz)	V_{CEO} (max) (V)	I_C (max) (mA)	P_{tot} (max) (mW)	Polarity	GUM (typ) (dB)	@ f = (MHz)	@ I_C = (mA)	@ V_{CE} = (V)	NF (typ) (dB)	@ f = (MHz)	@ I_C = (mA)	@ V_{CE} = (V)	NF (typ) (dB)	@ f = (MHz)	@ I_C = (mA)	@ V_{CE} = (V)	PL(1dB) (typ) (dBmW)	@ V_{CE} = (V)	@ f = (MHz)	@ I_C = (mA)	IP3 (typ) (dBm)	@ IC = (mA)	@ VCE = (V)
BFG21W	5	32	SOT343R	-	4.5	500	600	NPN	10	1900	1	3.6	-	-	-	-	-	-	-	-	-	-	-	-	-	-	-
BFG403W	5	25	SOT343R	17	4.5	3.6	16	NPN	22	2000	3	2	1	900	1	2	1.6	2000	1	2	5	1	900	1	6	1	1
BFG410W	5	26	SOT343R	22	4.5	12	54	NPN	21	2000	10	2	0.9	900	1	2	1.2	2000	1	2	5	2	2000	10	15	10	2
BFG424F	5	27	SOT343F	25	4.5	30	135	NPN	23	2000	25	2	0.8	900	2	2	1.2	2000	2	2	12	2	2000	25	22	25	2
BFG424W	5	27	SOT343R	25	4.5	30	135	NPN	22	2000	25	2	0.8	900	2	2	1.2	2000	2	2	12	2	2000	25	22	25	2
BFG425W	5	27	SOT343R	25	4.5	30	135	NPN	20	2000	25	2	0.8	900	2	2	1.2	2000	2	2	12	2	2000	25	22	25	2
BFG480W	5	29	SOT343R	21	4.5	250	360	NPN	16	2000	80	2	1.2	900	8	2	1.8	2000	8	2	20	3.6	2000	1	28	80	2
BFU610F	6	34	SOT343F	40	5	10	50	NPN	21	5800	8	2	0.75	2400	1	2	1.4	5800	1	2	-	-	-	-	14	8	5
BFU630F	6	35	SOT343F	40	5	30	130	NPN	28	2400	25	2	0.58	1500	5	2	0.73	2400	5	2	-	-	-	-	23	25	5
BFU660F	6	36	SOT343F	40	5	70	200	NPN	28.5	1500	60	2	0.6	1500	20	2	0.75	2400	20	2	-	-	-	-	30	60	5
BFU690F	6	37	SOT343F	40	5	100	300	NPN	25.6	1500	90	2	0.7	1500	50	2	0.9	2400	50	2	-	-	-	-	35	90	5
BFU710F	7	38	SOT343F	70	2.8	10	30	NPN	16.5	12000	8	2	0.9	5800	2	2	1.5	12000	2	2	-	-	-	-	14.5	8	2
BFU725F/N1	7	33	SOT343F	70	2.8	40	136	NPN	18	5800	25	2	0.47	2400	5	2	0.7	5800	5	2	8	2	5800	25	19	25	2
BFU730F	7	39	SOT343F	70	2.8	30	130	NPN	18.5	5800	25	2	0.56	2400	5	2	0.8	5800	5	2	-	-	-	-	20.5	25	2
BFU730LX	7	-	SOT883C	53	3.0	30	160	NPN	13.3	5800	25	2	0.55	2400	5	2	0.8	5800	5	2	-	-	-	-	26	12.4	2.3
BFU760F	7	40	SOT343F	70	2.8	70	200	NPN	25	2400	60	2	0.5	1500	20	2	0.6	2400	20	2	-	-	-	-	23	60	2
BFU790F	7	41	SOT343F	70	2.8	100	250	NPN	20.4	2400	90	2	0.56	1500	50	2	0.7	2400	50	2	-	-	-	-	24	90	2

Bold = highly recommended product

3.4 RF ICs

3.4.1 RF MMIC amplifiers and mixers

RF MMIC amplifiers and mixers selection guide on www.nxp.com/mmics
Easy-to-use parametric filters help you choose the right zRF MMIC for your design.

Why choose NXP's RF MMIC amplifiers and mixers:

- Reduced RF component count
- Easy circuit design-in
- Reduced board size
- Short time-to-market
- Broad portfolio
- Volume delivery
- Short lead time

General-purpose wideband amplifiers (50 Ω)

Type	Package			Gp [dB]			Pl(1dB) [dBm]			NF [dB]			IP3o[dBm]		Zout	External Inductor
		Vcc (V)	Is (mA)	250 MHz	500 MHz	750 MHz	250 MHz	500 MHz	750 MHz	250 MHz	500 MHz	750 MHz	250 MHz	750 MHz	[Ohm]	
BGA2870	SOT363	2.5	15.6	31.2	31.1	31.0	5.0	4.0	4.0	3.1	3.2	3.7	15.0	13.0	50	N
BGA2874	SOT363	2.5	16.0	31.1	31.0	30.6	5.0	4.0	4.0	3.0	3.1	3.4	19.0	17.0	50	N
				250 MHz	950 MHz	2150 MHz	250 MHz	950 MHz	2150 MHz	250 MHz	950 MHz	2150 MHz	950 MHz	2150 MHz		
BGA2800	SOT363	3	10.5	19.9	20.5	20.2			-2.0	3.7	3.6	3.7	11.0	8.0	50	N
BGA2803	SOT363	3	5.8	23.6	23.4	23.0	-6.0	-6.0	-8.0	3.7	3.6	3.4	5.0	2.0	50	N
BGA2748	SOT363	3	5.7	17.6	21.9	17.8		-9.2	-10.9	1.7	1.9	2.4	-1.9	-1.4	50	N
BGA2714	SOT363	3	4.6	20.7	20.4	20.8	-7.8	-7.9	-9.0	2.4	2.2	3.0	2.1	0.0	50	N
BGA2801	SOT363	3	14.3	22.2	22.4	23.0	2.0	2.0	0.0	3.8	3.8	3.9	14.0	9.0	50	N
BGA2802	SOT363	3	12.5	25.6	25.8	25.5	3.0	1.0	-3.0	4.2	4.1	3.6	13.0	6.0	50	N
BGA2815	SOT363	3	18.2	25.8	25.3	25.2	8.0	5.0	1.0	3.7	3.8	3.7	17.0	10.0	50	N
BGA2817	SOT363	3	20.0	24.5	24.7	25.1	6.0	6.0	5.0	3.9	3.9	3.8	18.0	15.0	50	N
BGA2819	SOT363	3	16.0	27.0	27.0	28.0		2.0	1.0		3.2	3.3	12.0	11.0	50	N
BGM1012	SOT363	3	14.6	19.6	20.0	20.4		6.0	3.4	4.9	4.8	4.9	18.0	13.0	50	Y
BGA2816	SOT363	3	22.0	31.9	32.0	26.9	7.0	5.0		3.2	3.2	3.2	15.0	8.0	50	N
BGA2818	SOT363	3	19.9	30.1	29.8	30.0	7.0	6.0	4.0	3.5	3.3	3.3	18.0	14.0	50	N
BGA2819	SOT363	3	18.0	30.0	30.0	31.0	5.0	5.0	3.0	3.0	3.1	3.4	16.0	14.0	50	N
BGA2850	SOT363	5	9.1	23.2	24.0	22.9			-2.0	4.2	4.1	4.0	10.0	8.0	50	N
BGA2851	SOT363	5	7.0	23.3	24.7	25.2	-3.0	-4.0	-5.0	4.0	3.2	3.0	8.0	5.0	50	N
BGA2715	SOT363	5	4.3	15.6	21.5	23.3		-8.0	-8.5	2.6	2.6	3.1	2.3	0.6	50	N
BGA2717	SOT363	5	8.0	20.0	24.2	25.1		-2.6	-3.1	2.3	2.3	2.9	10.0	6.3	50	N
BGA2712	SOT363	5	12.3	21.1	21.2	22.0		0.2	-2.0	4.2	3.9	4.3	11.0	6.0	50	N
BGA2866	SOT363	5	17.4	23.2	23.9	24.3	4.0	4.0	3.0	3.9	3.8	3.9	17.0	12.0	50	N
BGA2867	SOT363	5	21.7	26.4	27.2	27.2	6.8	6.5	4.9	3.7	3.8	3.7	18.8	14.1	50	N
BGA2709	SOT363	5	23.5	22.5	22.7	23.0		8.3	5.7	4.3	4.0	5.1	22.0	14.0	50	Y
BGA2716	SOT363	5	15.9	22.4	22.8	22.9		8.9	6.1	5.5	5.3	5.5	22.2	15.9	50	Y
BGA2776	SOT363	5	24.4	22.9	23.2	23.2		7.2	6.0	4.7	4.9	5.3	18.6	14.4	50	Y
BGA2865	SOT363	5	26.4	30.9	32.2	29.6	9.0	8.0	2.0	3.8	3.9	4.0	19.0	10.0	50	N
BGA2868	SOT363	5	26.0	31.5	32.8	33.5		11.0	8.5		4.0	4.1	23.5	21.5	50	N
BGA2869	SOT363	5	22.0	30.9	30.9	32.2	8.8	8.8	7.6	3.8	3.9	4.0	20.0	19.0	50	N
BGM1013	SOT363	5	27.5	35.3	35.6	32.1		13.0	8.1	4.6	4.6	4.9	22.7	18.6	75	Y
BGM1014	SOT363	5	21.0	30.2	32.2	34.3		11.2	5.7	4.3	4.2	4.2	20.5	15.1	75	Y

General-purpose LNA MMICs

Type	Package			|S21|² [dB]					Pl(1dB) [dBm]			NF_{min} [dB]					IP3o [dBm]					ESD protection
		V_{cc} (V)	Is (mA)	450 MHz	900 MHz	1800 MHz	2400 MHz	5800 MHz	450 MHz	900 MHz	2400 MHz	450 MHz	900 MHz	1800 MHz	2400 MHz	5800 MHz	450 MHz	900 MHz	1800 MHz	2400 MHz	5800 MHz	kV HBM
BGA2001	SOT343R	2.5	4.0		18.0	14.0							1.3	1.3				-7.4	-4.5			-
BGA2002 [1]	SOT343R	2.5	4.0		18.0	14.0							1.3	1.3				-7.4	-4.5			-
BGA2003	SOT343R	2.5	10.0		19.0	14.0							1.8	1.8				-6.5	-4.8			-
BGA2011	SOT363	3	15.0		19.0								1.5					10.0				-
BGA2012	SOT363	3	7.0			16.0								1.7					10.0			-
BGU7003	SOT891	2.5	5.0		20.0		15.2	11.4					0.6		0.8	1.5						1
BGU7003W	SOT886	2.5	5.0		20.0		15.2	11.4					0.6		0.8	1.5						1
BGU6101	SOT1209	3	1.5	13.0	12.0		13.0 [2]		-11.0	-11.5	-6.5 (2)	0.8	0.8		1.3 (2)		-2.5	-2.0		6.5 [2]	3	
BGU6102	SOT1209	3	3.0	18.5	16.5		14.0 [3]		-5.0	-5.5	0 (3)	0.7	0.8		1.2 (3)		5.5	6.0		11.5 [3]	3	
BGU6104	SOT1209	3	6.0	22.5	18.5		12.8 [4]		0.5	0.5	6.5 (4)	0.8	0.8		1.1 (4)		11.0	12.0		18.5 [4]	3	

[1] AEC-Q101 qualified [2] I_{cc} 3 mA [3] I_{cc} 6 mA [4] I_{cc} 12 mA

Bold = highly recommended product **Bold red** = new, highly recommended product

SiGe:C LNAs (for GPS and others)

Type	Package	Supply voltage V_{cc} (V)		Supply current I_{cc} (mA)			@ 1.575 GHz: Insertion power gain $\|s_{21}\|^2$ (dB)			Noise figure NF (dB)	Input power at 1 dB gain compression $P_{L(1dB)}$ (dBm)									Input third-order intercept point f_1 = 1713 MHz, f_2 = 1851 MHz $IP3_i$ (dBm)								
		Min	Max	Min	Typ	Max	Min	Typ	Max	Typ	V_{cc} = 1.5 V, Min	V_{cc} = 1.5 V, Typ	V_{cc} = 1.8 V, Min	V_{cc} = 1.8 V, Typ	V_{cc} = 2.2 V, Min	V_{cc} = 2.2 V, Typ	V_{cc} = 2.5 V, I_{cc} = 5 mA	V_{cc} = 2.85 V, Min	V_{cc} = 2.85 V, Typ	V_{cc} = 1.5 V, Min	V_{cc} = 1.5 V, Typ	V_{cc} = 1.8 V, Min	V_{cc} = 1.8 V, Typ	V_{cc} = 2.2 V, Min	V_{cc} = 2.2 V, Typ	V_{cc} = 2.5 V, I_{cc} = 5 mA	V_{cc} = 2.85 V, Min	V_{cc} = 2.85 V, Typ
BGU7003	SOT891	2.2	2.85	3	-	15	16	18.3	20	0.8	-	-	-	-	-	-	-20	-	-	-	-	-	-	-	-	0	-	-
BGU7004^	SOT886	1.5	2.85	-	4.5	-	-	16.5*	-	0.9	-	-	-14	-11	-	-	-	-11	-8	-	-	5	9	-	-	-	5	12
BGU7005	SOT886	1.5	2.85	-	4.5	-	-	16.5*	-	0.9	-	-	-14	-11	-	-	-	-11	-8	-	-	5	9	-	-	-	5	12
BGU7007	SOT886	1.5	2.85	-	4.8	-	-	18.5**	-	0.9	-	-	-15	-12	-	-	-	-14	-11	-	-	1	4	-	-	-	2	5
BGU7008^	SOT886	1.5	2.85	-	4.8	-	-	18.5**	-	0.9	-	-	-15	-12	-	-	-	-14	-11	-	-	1	4	-	-	-	2	5
BGU8006	WL-CSP	1.5	3.1	-	4.1	-	-	17.5****	-	0.6#	-	-	-	-10	-	-	-	-	-8	-	-	-	5	-	-	-	-	8
BGU8007	SOT886	1.5	2.2	-	4.6	-	-	19.0***	-	0.75#	-15	-12	-	-	-13	-10	-	-	-	1	4	-	-	2	5	-	-	-

* 16.5 dB without jammer / 17.5 dB with jammer
** 18.5 dB without jammer / 19.5 dB with jammer
*** 19.0 dB without jammer / 20.5 dB with jammer
**** 17.5 dB without jammer / 19 dB with jammer

^ AEC-Q101 qualified (some limitations apply)
# Evaluation board losses excluded

LNAs for set-top boxes (75 Ω)

Type	Package	Frequency range (MHz)	Mode	@ V_{CC} (V)	@ I_{CC} (mA)	Gain (1) (dB)	NF (dB)	$P_{L(1dB)}$ (dBm)	OIP3 (dBm)	FL (2) (dB)	RL_{out} (dB)	RL_{in} (dB)
BGU7031	SOT363	40 - 1000	G_p 10 dB	5	43	10	4.5	14	29	-0.2	12	18
BGU7032	SOT363	40 - 1000	G_p 10 dB	5	43	10	4.5	14	29	-0.2	12	18
			Bypass	5	4	-2	2.5	-	29	-0.2	8	8
BGU7033	SOT363	40 - 1000	G_p 10 dB	5	43	10	4.5	14	29	-0.2	12	18
			G_p 5 dB	5	43	5	6	9	29	-0.2	12	17
			Bypass	5	4	-2	2.5	-	29	-0.2	8	8
BGU7041	SOT363	40 - 1000	G_p 10 dB	3.3	38	10	4	12	29	-0.2	12	21
BGU7042	SOT363	40 - 1000	G_p 10 dB	3.3	38	10	4	12	29	-0.2	12	21
			Bypass	3.3	3	-2	2.5	-	29	-0.2	10	10
BGU7044	SOT363	40 - 1000	G_p 14 dB	3.3	34	14	2.8	13	29	-0.2	12	20
BGU7045	SOT363	40 - 1000	G_p 14 dB	3.3	34	14	2.8	13	29	-0.2	12	20
			Bypass	3.3	3	-2	2.5	-	27	-0.2	10	9

LNAs for wireless infrastructures (50 Ω)

Type	Package	@ V_{CC} [typ] (V)	@ I_{CC} [typ] (mA)	frange [min] (MHz)	frange [max] (MHz)	Gass [typ] (dB)	NF [typ] (dB)	$P_{L(1dB)}$ [typ] (dBm)	$IP3_O$ [typ] (dBm)	RL_{in} [typ] (dB)	RL_{out} [typ] (dB)
BGU7051	SOT650-1	3.3	65	500	750	23.5	0.6	17	32	27.5	18
				750	850	21.5	0.63	16.5	32	26	17.5
				900	1500	21	0.65	16.5	33	24.5	18
BGU7052	SOT650-1	3.3	80	1500	1750	21.5	0.76	15.5	37	23	22
				1850	1900	20	0.76	14.5	35.5	23	22
				1950	2500	19.7	0.79	14.5	35	22	21
BGU7053	SOT650-1	3.3	90	2300	2500	18.5	0.85	13.5	36	23	19.5
				2700	2800	17.5	0.9	13	36	26	23
BGU7060	SOT1301AA	5	200	700	800	3	21	11	25.5	20	19
						12	15	7.5	22.5	20	19
						18	7.2	-7	4.5	20	19
						35	1	-12.5	2.5	24	19
BGU7061	SOT1301AA	5	200	800	950	3	21	11	25.5	20	19
						12	15	7.5	22.5	20	19
						18	7.2	-7	4.5	20	19
						35	1	-12.5	2.5	24	19
BGU7062	SOT1301AA	5	185	1710	1785	3	20.6	10.7	25.6	23	16
						12	15	5.4	21	23	16
						18	9.3	-7	3.4	23	16
						35	0.98	-12.8	1	26	16
BGU7063	SOT1301AA	5	190	1920	1980	18	6.4	-6.4	5.4	35	15
			230			35	1.05	-12.5	0.9	31	15

General-purpose medium power amplifiers

Type	Package	@ V_{CC} [typ] (V)	@ I_{CC} [typ] (mA)	Frequency range [min] (MHz)	RF input frequency [max] (MHz)	Gain [typ] (dB)	$P_{L(1dB)}$ [typ] (dBm)	$IP3_O$ [typ] (dBm)	NF [typ] (dB)
BGA6289	SOT89	4.1	84	100-3000	900	15.0	31.0	17.0	3.5
					1800	13.0	28.0	15.0	3.7
BGA6489	SOT89	5.1	78	100-3000	900	20.0	33.0	20.0	3.1
					1800	16.0	30.0	17.0	3.3
BGA6589	SOT89	4.8	81	100-3000	900	22.0	33.0	21.0	3
					1800	17.0	32.0	20.0	3.3
BGA7014*	SOT89	5	70	30-6000	2000	12.0	13.0	26.0	6.2
					4000	13.5	10.0	20.5	6.0
BGA7017*	SOT89	5	87	30-6000	2000	12.0	16.5	29.0	6.4
					4000	13.5	11.5	23.0	6.3
BGA7020*	SOT89	5	120	30-6000	2000	13.0	18.5	33.0	6.5
					4000	14.0	14.0	26.0	6.2
BGA7024	SOT89	5	110	400 - 2700	940	22.0	24.0	37.5	2.9
					1960	16.0	25.5	38.0	3.7
					2140	15.0	25.5	38.0	3.7
					2445	14.0	24.5	37.5	4.0
BGA7027	SOT89	5	165	400 - 2700	940	19.0	29.0	41.5	2.6
					1960	11.5	27.5	43.0	3.8
					2140	11.0	28.0	42.5	3.9
BGA7124	SOT908	5	140	400 - 2700	940	23.0	25.0	38.5	5.2
					1960	16.5	24.5	38.0	4.6
					2140	16.0	24.5	37.5	4.8
					2445	14.0	23.5	36.0	5.4
BGA7127	SOT908	5	180	400 - 2700	940	20.0	27.5	41.5	3.1
					1960	13.0	28.5	42.5	4.5
					2140	12.0	28.0	42.0	4.6
					2445	10.5	27.5	41.5	4.7
BGA7130	SOT908	5	450	400 - 2700	750	18.0	30.0	43.0	5.0
					2140	10.0	30.0	44.0	5.0

VGAs for wireless infrastructures

Type	Package	type	@ V_{CC} [typ] (V)	@ I_{CC} [typ] (mA)	f_{range} [min] (MHz)	f_{range} [max] (MHz)	Gp @ minimum attenuation (dB)	Attenuation range (dB)	NF [typ] (dB)	$P_{L(1dB)}$ [typ] (dBm)	$IP3_O$ [typ] (dBm)
BGA7204	SOT617-3	single	5	115	400	700	18.5	31.5	7	21	38
			5	115	700	1450	18.5	31.5	6.5	21	37.5
			5	115	1450	2100	17.5	30.5	6.5	20.5	36
			5	115	2100	2750	16.5	30	7	20	34
BGA7210	SOT617-3	single	5	185	700	1400	30	31.5	6.5	21	39
			5	185	1400	1700	29.5	31.5	6.5	21	37
			5	185	1700	2200	29	31.5	6.5	21	35
			5	185	2200	2800	28	30.5	7	23	35
			5	185	3400	3800	26	29.5	8	19	27
BGA7350	SOT617-1	dual	5	245	50	250	18.5	24	6	17	43
BGA7351	SOT617-1	dual	5	280	50	250	22	28	6	16.5	46

2-stage variable-gain linear amplifier

Type	Package	@ V_s (V)	@ I_s (mA)	Frequency range	@ 900 MHz Gain[1] (dB)	@ 900 MHz DG[2] (dB)	@ 900 MHz P_{1dB} (dBm)	@ 900 MHz ACPR (dBc)	@ 1900 MHz Gain[1] (dB)	@ 1900 MHz DG[2] (dB)	@ 1900 MHz P_{1dB} (dBm)	@ 1900 MHz ACPR (dBc)	Limits V_s (V)	Limits I_s (mA)	Limits P_{tot} (mW)
BGA2031/1	SOT363	3	51	800-2500	24	62	11	49	23	56	13	49	3.3	77	200

[1] Gain = GP, power gain [2] DG = gain control range

Wideband linear mixer

Type	Package	@ V_s (V)	@ I_s (mA)	RF input Frequency range	IF output Frequency range	@ 880 MHz NF (dB)	@ 880 MHz Gain[1] (dB)	@ 880 MHz OIP3 (dBm)	@ 1900 MHz NF (dB)	@ 1900 MHz Gain[1] (dB)	@ 1900 MHz OIP3 (dBm)	Limits V_s (V)	Limits I_s (mA)	Limits P_{tot} (mW)
BGA2022	SOT363	3	6	800 - 2500	50 - 500	9	5	4	9	6	10	4	10	40

[1] Gain = GP, power gain [2] DG = gain control range

Bold = highly recommended product
Bold red = new, highly recommended product

* Check status in section 3.1, as this type is not yet released for mass production

3.4.2 Wireless infrastructure ICs

Low-noise PLL + VCO (LO generator) for wireless infrastructures

Type	Package	@ V_{CC}	@ I_{CC}	fi(ref)	VCO output frequency (MHz)	RF output frequency (MHz)	Normalized phase noise	Phase noise @ 1MHz	Integrated RMS phase error	Programmable output power
		[typ]	[typ]	[min]			[max]	[max]	[max]	[typ]
		(V)	(mA)	(MHz)			(dBc/Hz)	(dBc/Hz)	deg	(dBm)
BGX7300*	SOT1092-2	3.3	150	10 - 250	2200 - 2750 2750 - 3500 3500 - 4400	68 - 4400	-225	-134 (2.2 GHz carrier) -133 (3.0 GHz carrier) -131 (4.2 GHz carrier)	0.24° @ 2.1 GHz	-5 to +5

IQ modulators for wireless infrastructure

Type	Package	@ V_{CC}	@ I_{CC}	flo range	flo	Po	BWmod	Nflr(o) *	$P_{L(1dB)}$	$IP2_O$	$IP3_O$	SBS	CF
		[typ]	[typ]			[typ]	[typ]	[typ]	[typ]	[typ]	[typ]	[typ]	[typ]
		(V)	(mA)	(MHz)	(MHz)	(dBm)	(MHz)	(dBm/Hz)	(dBm)	(dBm)	(dBm)	(dBc)	(dBm)
BGX7100	SOT616-3	5	165	400 - 4000	750	-0.2	400	-159/-158.5	11.5	71	29	55	-55
			165		910			-159/-158.5	11.5	72	29	49	-55
			173		1840			-158.5/-158	11.5	69	27	47	-50
			173		1960			-158.5/-158	11.5	72.5	27	49	-48
			178		2140			-158.5/-158	11.5	74	27	51	-45
			178		2650			-158/-158	11.5	62	26	60	-45
			184		3650			-158/-158	11.5	60	25	53	-43
BGX7101	SOT616-3	5	172	400 - 4000	750	4	650	-159/-158.5	12	71	28	63	-51
			172		910			-159/-158.5	12	75	28	49	-57
			180		1840			-158.5/-158	12	71	27	55	-50
			180		1960			-158.5/-158	12	72	27	57	-47
			178		2140			-158.5/-158	12	75	27	63	-45
			182		2650			-158/-158	12	65	26	50	-45
			188		3650			-158/-158	12	65	25	57	-42

* Without modulation/with modulation

Dual mixers for wireless infrastructure

Type	Package	@ V_{CC}	@ I_{CC}	RF input frequency	RF input frequency	Local oscillator frequency	Local oscillator frequency	Second-order spurious rejection 2RF-2LO	NFSSB single-sideband	$IP3_i$	Gconv
		[typ]	[typ]	[min]	[max]	[min]	[max]	[max]	[typ]	[typ]	[typ]
		(V)	(mA)	(MHz)	(MHz)	(MHz)	(MHz)	(dBc)	(dB)	(dBm)	(dB)
BGX7220	SOT1092-2	5	330	700	950	500	1150	-60	10	26	8
BGX7221	SOT1092-2	5	365	1400	2700	1500	2500	-60	10	25.5	8.5

Bold red = new, highly recommended product

* Check status in section 3.1, as this type is not yet released for mass production

3.4.3 Satellite LNB RF ICs

Type	Package	Input freq range	V_{cc}	I	G_{conv}	NF	OIP3	LO Freq	Integrated Phase noise density (degrees RMS)
			(V)	(mA)	(dB)	(dB)	(dB)	(GHz)	
TFF1014HN	SOT763-1	10.7 - 12.75	5	52	36	7	13	9.75 / 10.6	1.5
TFF1015HN	SOT763-1	10.7 - 12.75	5	52	39	7	13	9.75 / 10.6	1.5
TFF1017HN	SOT763-1	10.7 - 12.75	5	52	42	7	13	9.75 / 10.6	1.5
TFF1018HN	SOT763-1	10.7 - 12.75	5	52	45	7	13	9.75 / 10.6	1.5

3.4.4 Low-noise LO generators for VSAT and general microwave applications

Why choose NXP's low-noise LO generators:

- Lowest total cost of ownership
- Alignment-free concept
- Easy circuit design-in
- Improved LO stability

Low-noise LO generators for VSAT applications

Type	Package	$f_{IN(REF)}$	V_{CC}	I_{CC}	PLL phase noise @ N=64, @ 100 kHz	PLL	Output buffer		Input
						$f_{o(RF)}$	Po	$RL_{out(RF)}$	S_i
			Typ	Typ	Max		Typ	Max	Min
		(MHz)	(V)	(mA)	(dBc/Hz)	(GHz)	(dBm)	(dB)	(dBm)
TFF1003HN	SOT616	50 - 815	3.3	100	-92	12.8 - 13.05	-5	-10	-10
TFF1007HN	SOT616	230.46 - 234.38	3.3	100	-104	14.62 - 15	-3	-10	-10

Low-noise LO generators for general microwave applications

Type	Package	$f_{IN(REF)}$	V_{CC}	I_{CC}	PLL phase noise @ N=64		PLL			Output buffer		Input	Frequency band
							fo(RF)			Po	RLout(RF)	S_i	
			Typ	Typ	@ 100 kHz	@ 10 MHz	Min	Typ	Max	Typ	Max	Min	
		(MHz)	(V)	(mA)	(dBc/Hz)	(dBc/Hz)	(GHz)	(GHz)	(GHz)	(dBm)	(dB)	(dBm)	
TFF11070HN*	SOT616	27 - 448	3.3	100	-95	-131	6.84	7	7.16	-5	-10	-10	C
TFF11073HN*	SOT616	28 - 468	3.3	100	-95	-131	7.16	7.33	7.49	-5	-10	-10	C
TFF11077HN*	SOT616	29 - 490	3.3	100	-95	-131	7.49	7.67	7.84	-5	-10	-10	C
TFF11080HN*	SOT616	31 - 513	3.3	100	-95	-131	7.84	8.02	8.21	-5	-10	-10	C. X
TFF11084HN*	SOT616	32 - 537	3.3	100	-95	-131	8.21	8.4	8.59	-5	-10	-10	X
TFF11088HN*	SOT616	34 - 562	3.3	100	-95	-131	8.59	8.79	8.99	-5	-10	-10	X
TFF11092HN*	SOT616	35 - 588	3.3	100	-95	-131	8.99	9.2	9.41	-5	-10	-10	X
TFF11094HN*	SOT616	36-600	3.3	100	-95	-131	9.00	9.4	9.6	-5	-10	-10	X
TFF11096HN*	SOT616	37 - 616	3.3	100	-95	-131	9.41	9.63	9.85	-5	-10	-10	X
TFF11101HN*	SOT616	38 - 644	3.3	100	-95	-131	9.85	10.07	10.31	-5	-10	-10	X
TFF11105HN*	SOT616	40 - 674	3.3	100	-95	-131	10.31	10.54	10.79	-5	-10	-10	Ku
TFF11110HN*	SOT616	42 - 706	3.3	100	-95	-131	10.79	11.03	11.29	-5	-10	-10	Ku
TFF11115HN*	SOT616	44 - 738	3.3	100	-95	-131	11.29	11.55	11.81	-5	-10	-10	Ku
TFF11121HN*	SOT616	46 - 773	3.3	100	-95	-131	11.81	12.09	12.36	-5	-10	-10	Ku
TFF11126HN*	SOT616	48 - 809	3.3	100	-95	-131	12.36	12.65	12.94	-5	-10	-10	Ku
TFF11132HN*	SOT616	51 - 846	3.3	100	-95	-131	12.9	13.2	13.5	-5	-10	-10	Ku
TFF11139HN*	SOT616	53 - 886	3.3	100	-95	-131	13.54	13.85	14.17	-5	-10	-10	Ka
TFF11145HN*	SOT616	55 - 927	3.3	100	-95	-131	14.17	14.5	14.83	-5	-10	-10	Ka
TFF11152HN*	SOT616	58 - 970	3.3	100	-95	-131	14.83	15.18	15.52	-5	-10	-10	Ka

Bold = highly recommended product

* To be released on request, please consult your local NXP representative or authorized distributor

3.5 RF MOS transistors

3.5.1 JFETs

JFET selection guide on www.nxp.com/rffets
Easy-to-use parametric filters help you choose the right junction field effect transistor for your design.

Why choose NXP's JFETs:

- Reliable volume supplier
- Short lead time
- Broad portfolio

N-channel junction field-effect transistors for switching

Type	Package	V_{DS}	I_G	CHARACTERISTICS										
				I_{DSS}		V_{gsoff}		R_{DSON}	C_{rs}		t_{on}		t_{off}	
		(V)	(mA)	(mA)		(V)		(Ω)	(pF)		(ns)		(ns)	
		max	max	min	max	min	max	max	min	max	typ	max	typ	max
BSR56	SOT23	40	50	50	-	4	10	25	-	5	-	-	-	25
BSR57	SOT23	40	50	20	100	2	6	40	-	5	-	-	-	50
BSR58	SOT23	40	50	8	80	0.8	4	60	-	5	-	-	-	100
PMBFJ108	SOT23	25	50	80	-	3	10	8	-	15	4	-	6	-
PMBFJ109	SOT23	25	50	40	-	2	6	12	-	15	4	-	6	-
PMBFJ110	SOT23	25	50	10	-	0.5	4	18	-	15	4	-	6	
PMBFJ111	SOT23	40	50	20	-	3	10	30	-	typ.3	13	-	35	-
PMBFJ112	SOT23	40	50	5	-	1	5	50	-	typ.3	13	-	35	-
PMBFJ113	SOT23	40	50	2	-	0.5	3	100	-	typ.3	13	-	35	-
PMBF4391	SOT23	40	50	50	150	4	10	30	-	3.5	-	15	-	20
PMBF4392	SOT23	40	50	25	75	2	5	60	-	3.5	-	15	-	35
PMBF4393	SOT23	40	50	5	30	0.5	3	100	-	3.5	-	15	-	50

P-channel junction field-effect transistors for switching

Type	Package	V_{DS}	I_G	CHARACTERISTICS										
				I_{DSS}		V_{gsoff}		R_{DSON}	C_{rs}		t_{on}		t_{off}	
		(V)	(mA)	(mA)		(V)		(Ω)	(pF)		(ns)		(ns)	
		max	max	min	max	min	max	max	min	max	typ	max	typ	max
PMBFJ174	SOT23	30	50	20	135	5	10	85	typ.4		7	-	15	-
PMBFJ175	SOT23	30	50	7	70	3	6	125	typ.4		15	-	30	-
PMBFJ176	SOT23	30	50	2	35	1	4	250	typ.4		35	-	35	-
PMBFJ177	SOT23	30	50	1.5	20	0.8	2.25	300	typ.4		45	-	45	-

N-channel junction field-effect transistors for general RF applications

Type	Package	V_{DS}	I_G	CHARACTERISTICS							
				I_{DSS}		V_{gsoff}		|Yfs|		C_{rs}	
		(V)	(mA)	(mA)		(V)		(mS)		(pF)	
		max	max	min	max	min	max	min	max	min	max
DC, LF, and HF amplifiers											
BF545A	SOT23	30	10	2	6.5	0.4	7.5	3	6.5	0.8	-
BF545B	SOT23	30	10	6	15	0.4	7.5	3	6.5	0.8	-
BF545C	SOT23	30	10	12	25	0.4	7.5	3	6.5	0.8	-
BF556A	SOT23	30	10	3	7	0.5	7.5	4.5	-	0.8	-
BF556B	SOT23	30	10	6	13	0.5	7.5	4.5	-	0.8	-
BF556C	SOT23	30	10	11	18	0.5	7.5	4.5	-	0.8	-
Pre-amplifiers for AM tuners in car radios											
BF861A	SOT23	25	10	2	6.5	0.2	1.0	12	20	2.1	2.7
BF861B	SOT23	25	10	6	15	0.5	1.5	16	25	2.1	2.7
BF861C	SOT23	25	10	12	25	0.8	2	20	30	2.1	2.7
BF862	SOT23	20	10	10	25	0.3	2	35	-	typ=1.9	-
RF stages FM portables, car radios, main radios & mixer stages											
BF510[1]	SOT23	20	10	0.7	3	typ. 0.8		2.5		0.4	0.5
BF511[1]	SOT23	20	10	2.5	7	typ. 1.5		4		0.4	0.5
BF512[1]	SOT23	20	10	6	12	typ. 2.2		6		0.4	0.5
BF513[1]	SOT23	20	10	10	18	typ. 3		7		0.4	0.5
Low-level general-purpose amplifiers											
BFR30	SOT23	25	5	4	10	< 5		1	4	1.5	-
BFR31	SOT23	25	5	1	5	< 2.5		1.5	4.5	1.5	-
General-purpose amplifiers											
BFT46	SOT23	25	5	0.2	1.5	< 1.2		> 1		1.5	-
AM input stages UHF/VHF amplifiers											
PMBFJ308	SOT23	25	50	12	60	1	6.5	> 10		1.3	2.5
PMBFJ309	SOT23	25	50	12	30	1	4	> 10		1.3	2.5
PMBFJ310	SOT23	25	50	24	60	2	6.5	> 10		1.3	2.5
PMBFJ620	SOT363	25	50	24	60	2	6.5	10		1.3	2.5

[1] Asymmetrical

3.5.2 MOSFETs

RF MOSFET selection guide on www.nxp.com/rffets Easy-to-use parametric filters help you choose the right RF MOSFET for your design.

Why choose NXP's MOSFETs:

- Reference designs for TV tuning
- Short lead time
- Broad portfolio
- Smallest packages
- 2-in-1 FETs for tuner applications
- Reliable volume supply
- Best performance MOSFETs for TV tuning

N-channel, single MOSFETs for switching

Type	Package	V_{DS}	Characteristics															MODE
			I_D	I_{DSS}		$V_{GS(th)}$		R_{DSON}	C_{rs}		t_{on}		t_{off}		$\|S_{21(on)}\|^2$	$\|S_{21(off)}\|^2$		
		(V)	(mA)	(mA)		(V)		(Ω)	(pF)		(ns)		(ns)		(dB)	(dB)		
		max	max	min	max	min	max	max	min	max	typ	max	typ	max	max	min		
BSS83	SOT143	10	50	-	-	0.1	2	45	typ.0.6		-	1	-	5	-	-		enh.
Silicon RF Switches																		
BF1107	SOT23	3	10	-	100	-	7	20	-	-	-	-	-	-	2.5	30		depl.
BF1108	SOT143B	3	10	-	100	-	7	20	-	-	-	-	-	-	3	30		depl.
BF1108R	SOT143R	3	10	-	100	-	7	20	-	-	-	-	-	-	3	30		depl.
BF1108W	SOT343	3	10	-	100	-	7	20	-	-	-	-	-	-	3	30		depl
BF1108WR	SOT343R	3	10	-	100	-	7	20	-	-	-	-	-	-	3	30		depl
BF1118	SOT143B	3	10	-	100	-	7	22	-	-	-	-	-	-	3	30		depl
BF1118R	SOT143R	3	10	-	100	-	7	22	-	-	-	-	-	-	3	30		depl
BF1118W	SOT343	3	10	-	100	-	7	22	-	-	-	-	-	-	3	30		depl
BF1118WR	SOT343R	3	10	-	100	-	7	22	-	-	-	-	-	-	3	30		depl

Bold = highly recommended product

N-channel, dual-gate MOSFETs

Type	Package	V_{DS}	I_D	Characteristics										
				I_{DSX}		$V_{GS(th)}$		|Yfs|		C_{is}	C_{os}	F @ 800 MHz	VHF	UHF
		(V)	(mA)	(mA)		(V)		(mS)		(pF)	(pF)	(dB)		
		max	max	min	max	min	max	min	max	typ	typ	typ		
With external bias														
BF908	SOT143	12	40	3	27	-	-2	36	50	3.1	1.7	1.5	X	X
BF908R	SOT143R	12	40	3	27	-	-2	36	50	3.1	1.7	1.5	X	X
BF908WR	SOT343R	12	40	3	27	-	-2	36	50	3.1	1.7	1.5	X	X
BF991	SOT143	20	20	4	25	-	-2.5	10	-	2.1	1.1	1	X	-
BF992	SOT143	20	40	-	-	-	-1.3	20	-	4	2	1.2[1]	X	-
BF994S	SOT143	20	30	4	20	-	-2.5	15	-	2.5	1	1[1]	X	-
BF996S	SOT143	20	30	4	20	-	-2.5	15	-	2.3	0.8	1.8	-	X
BF998	SOT143	12	30	2	18	-	-2.0	21	-	2.1	1.05	1	X	X
BF998R	SOT143R	12	30	2	18	-	-2.0	21	-	2.1	1.05	1	X	X
BF998WR	SOT343R	12	30	2	18	-	-2.5	22	-	2.1	1.05	1	X	X
Fully internal bias														
BF1105	SOT143	7	30	8	16	0.3	1.2	25	-	2.2[3]	1.2[2]	1.7	X	X
BF1105R	SOT143R	7	30	8	16	0.3	1.2	25	-	2.2[3]	1.2[2]	1.7	X	X
BF1105WR	SOT343R	7	30	8	16	0.3	1.2	25	-	2.2[3]	1.2[2]	1.7	X	X
Partly internal bias														
BF904A	SOT143	7	30	8	13	0.3	1	22	30	2.2	1.3	2	X	X
BF904AR	SOT143R	7	30	8	13	0.3	1	22	30	2.2	1.3	2	X	X
BF904AWR	SOT343R	7	30	8	13	0.3	1	22	30	2.2	1.3	2	X	X
BF909A	SOT143	7	40	12	20	0.3	1	36	50	3.6	2.3	2	X	X
BF909AR	SOT143R	7	40	12	20	0.3	1	36	50	3.6	2.3	2	X	X
BF909AWR	SOT343R	7	40	12	20	0.3	1	36	50	3.6	2.3	2	X	X
BF1102(R)[4]	SOT363	7	40	12	20	0.3	1.2	36	-	2.8[3]	1.6[2]	2	X	X
BF1201	SOT143	10	30	11	19	0.3	1.2	23	35	2.6	0.9	1.9	X	X
BF1201R	SOT143R	10	30	11	19	0.3	1.2	23	35	2.6	0.9	1.9	X	X
BF1201WR	SOT343R	10	30	11	19	0.3	1.2	23	35	2.6	0.9	1.9	X	X
BF1202	SOT143	10	30	8	16	0.3	1.2	25	40	1.7	0.85	1.1	X	X
BF1202R	SOT143R	10	30	8	16	0.3	1.2	25	40	1.7	0.85	1.1	X	X
BF1202WR	SOT343R	10	30	8	16	0.3	1.2	25	40	1.7	0.85	1.1	X	X
BF1203[5]	SOT363	10	30	11	19	0.3	1.2	23	35	2.6	0.9	1.9	X	-
		10	30	8	16	0.3	1.2	25	40	1.7	0.85	1.1	-	X
BF1204[4]	SOT363	10	30	8	16	0.3	1.2	25	40	1.7	0.85	1.1	X	X
BF1206[5]	SOT363	6	30	14	23	0.3	1.0	33	48	2.4	1.1	1.6	X	-
		6	30	9	17	0.3	1.0	29	44	1.7	0.85	1.4	-	X
BF1207[5][7][8]	SOT363	6	30	13	23	0.3	1.0	25	40	2.2	0.9	1.4	X	-
		6	30	9	19	0.3	1.0	26	41	1.8	0.8	1.4	-	X
BF1208[5][6][7]	SOT666	6	30	14	24	0.3	1	26	41	2.2	0.9	1.4	X	-
		6	30	9	17	0.3	1	28	43	2	0.85	1.4	-	X
BF1208D[5][6][7]	SOT666	6	30	14	24	0.3	1	26	41	2.1	0.8	1.1	X	-
		6	30	10	20	0.3	1	25	40	2.1	0.85	1.4	-	X
BF1210[5][6]	SOT363	6	30	14	24	0.3	1	26	41	2.2	0.9	1.4	X	-
		6	30	9	17	0.3	1	28	43	2	0.85	1.4	-	X
BF1211	SOT143	6	30	11	19	0.3	1.0	25	40	2.1	0.9	1.3	X	-
BF1211R	SOT143R	6	30	11	19	0.3	1.0	25	40	2.1	0.9	1.3	X	-
BF1211WR	SOT343	6	30	11	19	0.3	1.0	25	40	2.1	0.9	1.3	X	-
BF1212	SOT143	6	30	8	16	0.3	1.0	28	43	1.7	0.9	1.1	-	X
BF1212R	SOT143R	6	30	8	16	0.3	1.0	28	43	1.7	0.9	1.1	-	X
BF1212WR	SOT343	6	30	8	16	0.3	1.0	28	43	1.7	0.9	1.1	-	X
BF1214[4]	SOT363	6	30	13	23	0.3	1.0	25	35	2.2	0.9	1.4	X	X
BF1218[5][6][7]	SOT363	6	30	14	24	0.3	1	26	41	2.1	0.8	1.1	X	-
		6	30	10	20	0.3	1	25	40	2.1	0.85	1.4	-	X

(1) @ 200 MHz
(2) C_{oss}
(3) C_{ig}
(4) Two equal dual gate MOSFETs in one package
(5) Two low-noise gain amplifiers in one package
(6) Transistor A: fully internal bias, transistor B: partly internal bias
(7) Internal switching function
(8) Transistor A: partly internal bias, transistor B: fully internal bias

N-channel, dual-gate MOSFETs for set-top boxes

Type	Package	V_{DS}	I_D	Characteristics							
				I_{DSX}	$V_{(th)gs}$		|Yfs|	C_{is}	C_{OS}	F @ 800 MHz	X-Mod @ 40 dB gain reduction
		(V)	(mA)	(mA)	(V)		(mS)	(pF)	(pF)	(dB)	(dB)
		max	max	max	min	max	typ	typ	typ	typ	typ
BF1215 [1][2][3]	SOT363	6	30	19.5	0.3	1	27	2.5	0.8	1.9	107
			30	23	0.3	1	27	2.5	0.8	1.9	107
BF1216[1]	SOT363	6	30	19.5	0.3	1	27	2.5	0.8	1.9	107
			30	23	0.3	1	27	2.5	0.8	1.9	107
BF1217	SOT343		30	23	0.3	1	27	2.5	0.8	1.9	107

(1) Two low-noise gain amplifiers in one package
(2) Transistor A: fully internal bias, transistor B: partly internal bias
(3) Internal switching function
Bold = highly recommended product

3.6 RF modules

CATV module selection guide on www.nxp.com/catv
Easy-to-use parametric filters help you choose the right CATV module for your design.

Why choose NXP's RF modules:

- Excellent linearity, stability, and reliability
- Rugged construction
- Extremely low noise
- High power gain
- Low total cost of ownership

CATV types for Chinese (C-types) and 1 GHz GaAs HFET line-ups

The C-types are specially designed for the Chinese market, customized for two major governmental projects. The GaAs HFET family includes a complete 1 GHz line-up for high-end applications around the world.

C-types (China)

- CATV push-pulls, section 3.6.2: BGY588C, BGE788C, CGY888C
- CATV power doublers, section 3.6.3: BGD712C, CGD982HCi, CGD985HCi, CGD987HCi
- CATV optical receivers, section 3.6.4: BGO807C, BGO807CE

1 GHz GaAs HFET high-end hybrids

- CATV push-pulls, section 3.6.2 : CGY1032, CGY1041, CGY1043, CGY1047, CGY1049
- CATV power doublers, section 3.6.3: CGD1040Hi, CGD1042Hi, CGD1044Hi, CGD1046Hi, CGD1042H, CGD1044H

3.6.1 CATV push-pulls

Type	Frequency range (MHz) (1)	Gain (dB)	Slope (dB)	FL (dB) (2)	RL_{IN}/RL_{OUT} (dB)	CTB (dB) (3)	X_{mod} (dB) (3)	CSO (dB) (3)	@ Ch	@ Vo (dBmV)	NF @ f_{max} (dB)	I_{tot} (mA)
BGY588C	40-550	33.5 - 35.5	0.2 - 1.7	0.5	16 / 16	-57		-62	77	44	8	345
BGY785A	40-750	18 - 19	0 - 2	0.1	20 / 20	-54.5	-57.5	-62	110	44	6	225
BGE788C		33.2 - 35.2	0.3 - 2.3	0.6	16 / 16	-49		-52	110	44	8	325
BGY787		21 - 22	0 - 1.5	0.2	20 / 20	-54.5	-54	-57.5	110	44	5	220
BGE787B		28.5 - 29.5	0.2 - 2.2	0.45	20 / 20	-48	-52	-56	110	44	6.5	340
BGE885	40-870	16.5 - 17.5	0.2 - 1.2	0.5	14 / 14						8	240
BGX885N		16.5 - 17.5	0.2 - 1.4	0.3	20 / 20						8	240
BGY885A		18 - 19	0 - 2	0.2	20 / 20	-65	-65	-67	49	44	6	225
BGY887		21 - 22	0.2 - 2	0.2	20 / 20	-64.5	-64.5	-67.5	49	44	5	220
CGY888C		34.5 - 36.5	1.5	0.25	20 / 20	-65	-72	-63	112	44	4	280
BGY835C		33.5 - 34.5	0.5 - 2.5	0.5	20 / 20	-60		-55	49	44	7	340
BGY887B		28.5 - 29.5	0.5 - 2.5	0.5	20 / 20	-60	-60	-60	49	44	6.5	340
BGY888		33.5 - 34.5	0.5 - 2.5	0.2	20 / 20	-63.5	-63	-64	49	44	5.5	325

3.6.2 CATV push-pulls 1 GHz

Type	Frequency range (MHz) (1)	Gain (dB)	Slope (dB)	FL (dB) (1)	RL_{IN}/RL_{OUT} (dB)	CTB (dB) (3)	X_{mod} (dB) (3)	CSO (dB) (3)	@ Ch	@ Vo (dBmV)	NF @ f_{max} (dB)	I_{tot} (mA)
CGY1041	40 - 1003	21 - 22.5	1.2 - 2.7	0.9	20 / 18	-62	-58	-64	79 NTSC channels + 75 digital channels	44	4.3	265
CGY1043		23 - 24.5	1.2 - 2.7	0.9	20 / 18	-62	-58	-64	79 NTSC channels + 75 digital channels	44	4.2	265
CGY1047		27 - 28.5	1.5 - 2.5	0.8	20 / 18	-64	-60	-66	79 NTSC channels + 75 digital channels	44	4.5	250
CGY1049		29 - 31	0.85 - 2.35	0.85	20 / 18	-62	-58	-64	79 NTSC channels + 75 digital channels	44	4.5	265
CGY1032		32 - 34	1.05 - 2.55	0.85	20 / 18	-62	-58	-64	79 NTSC channels + 75 digital channels	44	4.4	265
BGY1085A		18 - 19	0 - 2	0.3	20 / 20	-53	-54	-56	150	40	7.5	240

Bold = highly recommended product

3.6.3 CATV power doublers

Type	Frequency range (MHz) [1]	Gain (dB)	Slope (dB)	FL (dB) [1]	RL_{IN}/RL_{OUT} (dB)	CTB (dB) [3]	X_{mod} (dB) [3]	CSO (dB) [3]	@ Ch	@ Vo (dBmV)	NF @ f_{max} (dB)	I_{tot} (mA)
BGD712	40 - 750	18.2 - 18.8	0.5 - 1.5	0.35	17 / 17	-62	-63	-63	112	44	7	395
BGD712C		18.2 - 18.8	0.5 - 1.5	0.35	17 / 17	-62		-63	112	44	7	410
BGD714		20 - 20.6	0.5 - 1.5	0.35	23 / 23	-61	-62	-62	112	44	7	395
BGD812	40 - 870	18.2 - 18.8	0.4 - 1.4	0.5	25 / 23	-57	-62	-58	132	44	7.5	395
BGD814		19.7 - 20.3	0.5 - 1.5	0.5	25 / 24	-56	-61	-57	132	44	7.5	395
BGD816L		21.2 - 21.8	0.5 - 1.5	0.5	22 / 25	-55	-58	-56	132	44	7.5	360
CGD942C		22 - 24	1 - 2	0.5	20 / 20	-66	-66	-66	98	48	3.5	450
CGD944C		24 - 26	1 - 2	0.5	20 / 20	-66	-66	-66	98	48	3.5	450
CGD1040HI	40 - 1003	19.5 - 22	0.5 - 2	1	20 / 20	-70	-66	-76	79	58.4	5.5	440
CGD1042HI		22 - 23.5	0.5 - 2	1	20 / 20	-70	-65	-75	79	58.4	5.5	440
CGD1044HI		23.5 - 25.5	0.5 - 2	1	20 / 20	-70	-64	-75	79	58.4	5	440
CGD1046HI		26.5 - 28	0.7 - 2.2	1	20 / 20	-75	-68	-70	79	56.4	5	450
CGD1042H		22 - 24	1.5	0.5	20 / 21	-75	-67	-76	79	59	5	450
CGD1044H		24 - 26	1	0.5	20 / 21	-75	-67	-76	79	59	5	450
CGD982HCI		22 - 24	0.5 - 2	1	20 / 20	-66	-68	-69	98	48	5.5	440
CGD985HCI		23.5 - 25.5	0.5 - 2	1	20 / 20	-66	-68	-69	98	48	5	440
CGD987HCI		26 - 28	0.7 - 2	1	20 / 20	-66	-68	-66	98	48	5	440

3.6.4 CATV optical receivers

Type	Frequency range (MHz) [1]	S (V/W) [4]	Slope (dB)	FL (dB) [1]	RL_{OUT} (dB)	IMD3 (dB) [3]	IMD2 (dB) [3]	@ $f_{measured}$ (MHz)	@ $P_{i(opt)}$ (mW)	NF @ f_{max} (dB)	I_{tot} (mA)	Connectors
BGO807C	40 - 870	750	0 - 2	1	11	-71	-55	854.5	1	8.5	205	FC and SC
BGO807CE		750	0 - 2	1	11	-69	-53	854.5	1	8.5	205	FC and SC

3.6.5 CATV reverse hybrids

Type	Frequency range (MHz)[1]	Gain (dB)	Slope (dB)	FL (dB) [1]	RL_{IN}/RL_{OUT} (dB)	CTB (dB) [3]	X_{mod} (dB) [3]	CSO (dB) [3]	@ Ch	@ Vo (dBmV)	NF @ f_{max} (dB)	I_{tot} (mA)
BGY68	5 - 75	29.2 - 30.8	-0.2 - 0.5	0.2	20 / 20	-68	-60		4	50	3.5	135
BGY66B	5 - 120	24.5 - 25.5	-0.2 - 0.5	0.2	20 / 20	-66	-54		14	48	5	135
BGY67	5 - 200	21.5 - 22.5	-0.2 - 0.5	0.2	20 / 20	-67	-60		22	50	5.5	215
BGY67A		23.5 - 24.5	-0.2 - 0.5	0.2	20 / 20	-67	-59		22	50	5.5	215
BGR269		34.5 - 35.5	-0.2 - 0.6	0.5	20 / 20	-57	-50	-66	28	50	5.5	160

Bold = highly recommended product

[1] Frequency range: minimum and maximum frequency in MHz at which data are characterized (@ Ch / @ Vo)

[2] FL is flatness of frequency response

[3] The number of channels and the output voltage at which CTB, X_{mod}, CSO, IMD2, and IMD3 are characterized, are @ f_{max}

[4] S is minimum responsivity of optical receivers

3.7 RF power transistors

NEW: RF power transistor selection guide on www.nxp.com/rfpower
Easy-to-use parametric filters help you choose the right RF power transistor for your design.

3.7.1 RF power transistors for base stations

Device naming conventions RF power transistors for base stations

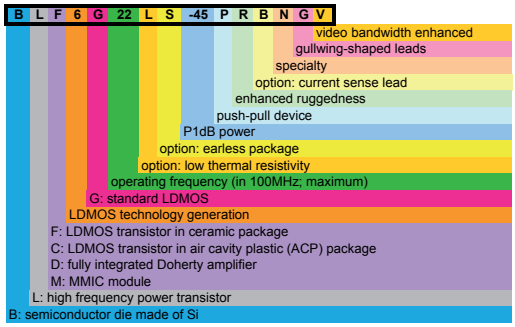

Why choose NXP's RF power transistors for base stations:

- Leading technology (generations 6, 7, and 8 of LDMOS)
- Highest efficiency
- Best ruggedness
- Advanced Doherty amplifier designs
- Very broad band (video bandwidth enhanced) devices
- Industry's first 3.8 GHz Doherty
- Industry's first three-way, 900 MHz Doherty
- Industry's first 50 V, 600 W, single-package Doherty

NXP offers complete line-ups of RF power transistors operating from 800 MHz right up to 3.8 GHz for base stations, covering all cellular technologies [MC-GSM/EDGE, TDMA, (TD-S)CDMA, W-CDMA/UMTS, LTE] and WiMAX infrastructures.

3.7.1.1 0.7 - 1.0 GHz line-up

						Test signal performance						
Type	Product	f_{min} (MHz)	f_{max} (MHz)	P1dB (W)	Matching	VDS (V)	P_L (W)	BO (dB)	η_D (%)	G_p (dB)	Test signal	Package
BLP7G22-10*	Driver	700	2200	10	-	28	2	7.0	26	17	2-c WCDMA	SOT1179
BLM6G10-30(G)	MMIC	920	960	30	I/O	28	2	11.8	11.5	29	2-c WCDMA	SOT822
BLF6G10L-40BRN	Driver/final	700	1000	40	I	28	2.5	12.0	15	23	2-c WCDMA	SOT1112A
BLF6G10(S)-45		700	1000	45	I	28	1	16.5	8	23	2-c WCDMA	SOT608
BLP7G07S-140P(G)*	Final	700	900	140	O	28	35	6.0	28	19	2-c WCDMA	SOT1224
BLF8G10L(S)-300P*		850	960	300	I/O	28	60	7.0	30	19	2-c WCDMA	SOT539
BLF8G10L(S)-160		920	960	160	I/O	30	35	6.6	29	19.7	2-c WCDMA	SOT502
BLF7G10L(S)-250		920	960	250	I/O	30	60	6.2	30.5	19.5	2-c WCDMA	SOT502
BLF6G10(LS)-200RN		688	1000	200	I	28	40	7.0	28.5	20	2-c WCDMA	SOT502
BLF6G10(LS)-135RN		700	1000	135	I	28	26.5	7.1	28	21	2-c WCDMA	SOT502
BLF6H10L(S)-160		700	1000	160	-	50	45	5.5	30	20	2-c WCDMA	SOT467
BLF6G10(LS)-160RN		700	1000	160	I	32	32	7.0	27	22.5	2-c WCDMA	SOT502
BLF8G10L(S)-160V*		700	1000	160	I/O	30	35	6.6	28	30	2-c WCDMA	SOT1244
BLF8G10LS-200GV*		700	1000	200	I/O	28	45	6.5	28	19.3	2-c WCDMA	SOT1244C
BLF6G10L(S)-260PRN		700	1000	260	I	28	40	8.1	26.5	22	2-c WCDMA	SOT539
BLF8G10LS-270GV*		700	1000	270	I/O	28	56	6.8	28	19.6	2-c WCDMA	SOT1244C
BLF8G10LS-400PGV*		700	1000	400	I/O	28	79	7.0	27	19.4	2-c WCDMA	SOT1242C
BLP7G09S-140P(G)*		900	1000	140	O	28	35	6.0	28	19	2-c WCDMA	SOT1224

Bold red = new, highly recommended product

* Check status in section 3.1, as this type is not yet released for mass production

3.7.1.2 1.4 - 1.7 GHz line-up

Type	Product	f_{min} (MHz)	f_{max} (MHz)	P1dB (W)	Matching	Test signal performance						
						VDS (V)	P_L (W)	BO (dB)	η_D (%)	G_p (dB)	Test signal	Package
BLF6G21-10G	Driver	1	2200	10	-	28	0.7	11.5	15	18.5	2-c WCDMA	SOT538A
BLP7G22-10		700	2200	10	-	28	2	7.0	26	17	2-c WCDMA	SOT1179
BLF6G15L-40BRN	Driver/final	1450	1550	40	I/O	28	2.5	12.0	13	22	2-c WCDMA	SOT1112A
BLF6G15L(S)-40RN*		1450	1550	40	I/O	28	2.5	12.0	13	21.5	2-c WCDMA	SOT1135
BLF7G15LS-200	Final	1450	1550	200	I/O	28	50	6.0	29	19.5	2-c WCDMA	SOT502B
BLF6G15L-250PBRN		1450	1550	250	I/O	28	60	6.2	33	18.5	2-c WCDMA	SOT1110A
BLF7G15LS-300P		1450	1550	300	I/O	28	85	5.5	31	18	2-c WCDMA	SOT539B

3.7.1.3 1.8 - 2.0 GHz line-up

Type	Product	f_{min} (MHz)	f_{max} (MHz)	P1dB (W)	Matching	Test signal performance						
						VDS (V)	P_L (W)	BO (dB)	η_D (%)	G_p (dB)	Test signal	Package
BLF6G21-10G	Driver	1	2200	10	-	28	0.7	11.5	15	18.5	2-c WCDMA	SOT538A
BLP7G22-10		700	2200	10	-	28	2	7.0	26	17	2-c WCDMA	SOT1179
BLF6G20(S)-45	Driver/final	1800	2000	45	I/O	28	2.5	12.6	14	19.2	2-c WCDMA	SOT608
BLF7G20L(S)-90P	Final	1427	2170	90	I/O	28	40	3.5	41	19.5	GSM EDGE	SOT1121
BLF6G20(LS)-75		1800	2000	75	I/O	28	29.5	4.1	37.5	19	GSM EDGE	SOT502
BLF6G20(LS)-110		1800	2000	110	I/O	28	25	6.4	32	19	2-c WCDMA	SOT502
BLF6G20LS-140		1800	2000	140	I/O	28	35.5	6.0	30	16.5	2-c WCDMA	SOT502B
BLF7G20LS-140P		1800	2000	140	I/O	28	60	3.7	41	17.5	GSM EDGE	SOT1121B
BLF6G20(LS)-180RN		1800	2000	180	I/O	30	40	6.5	27	17.2	2-c WCDMA	SOT502
BLF8G20L(S)-200V*		1800	2000	200	I/O	28	55	5.6	33	17.5	2-c WCDMA	SOT1120
BLF6G20S-230PRN		1800	2000	230	I/O	28	65	5.5	32	17.5	2-c WCDMA	SOT539B
BLF7G20LS-260A*		1800	1900	260	I/O	28	50	7.2	44	15.5	2-c WCDMA	SOT539B
BLF8G20LS-270GV*		1800	2000	270	I/O	28	50	7.3	25	17.8	2-c WCDMA	SOT1244C
BLF8G20LS-270PGV*		1800	2000	270	I/O	28	56	6.8	28	19.4	2-c WCDMA	SOT1242C
BLF7G20L(S)-200		1805	1990	200	I/O	28	55	5.6	33	18	2-c WCDMA	SOT502
BLF7G20L(S)-250P		1805	1880	250	I/O	28	70	5.5	35	18	2-c WCDMA	SOT539
BLD6G21L(S)-50	Integrated Doherty	2010	2025	50	O	28	8	8.0	43	14.5	TD-SCDMA	SOT1130

3.7.1.4 2.0 - 2.2 GHz line-up

Type	Product	f_{min} (MHz)	f_{max} (MHz)	P1dB (W)	Matching	Test signal performance						
						VDS (V)	P_L (W)	BO (dB)	η_D (%)	G_p (dB)	Test signal	Package
BLF6G21-10G	Driver	1	2200	10	-	28	0.7	11.5	15	18.5	2-c WCDMA	SOT538A
BLP7G22-10*		700	2200	10	-	28	2	7.0	26	17	2-c WCDMA	SOT1179
BLF3G21-6		1800	2200	6	-	26	6	0.0	39	15.5	CW	SOT538A
BLF3G21-30		1800	2200	30	-	26	30	0.0	35	13.5	CW	SOT467C
BLF6G22L(S)-40P	Driver/final	2110	2170	40	I/O	28	13.5	4.7	30	19	2-c WCDMA	SOT1121
BLF6G22L-40BN		2000	2200	40	I/O	28	2.5	12.0	16	19	2-c WCDMA	SOT1112A
BLF6G22(S)-45		2000	2200	45	I/O	28	2.5	12.6	13	18.5	2-c WCDMA	SOT608
BLM6G22-30(G)	MMIC	2100	2200	30	I/O	28	2	11.8	9	29.5	2-c WCDMA	SOT822
BLM7G22S-60PB(G)*		2000	2200	60	I/O	28	3.2	12.7	10	30	2-c WCDMA	SOT1212
BLF7G21LS-160	Final	1800	2050	160	I/O	28	45	5.5	34	18	2-c WCDMA	SOT1121B
BLF7G21L(S)-160P		1800	2050	160	I/O	28	45	5.5	34	18	2-c WCDMA	SOT1121
BLF6G22LS-75		2000	2200	75	I/O	28	17	6.4	30.5	18.7	2-c WCDMA	SOT502B
BLF6G22LS-100		2000	2200	100	I/O	28	25	6.0	29	18.5	2-c WCDMA	SOT502B
BLF7G22L(S)-100P		2000	2200	100	I/O	28	20	7.0	28.5	19.1	2-c WCDMA	SOT1121B
BLF6G22LS-130		2000	2200	130	I/O	28	30	6.4	28.5	17	2-c WCDMA	SOT502B
BLF7G22L(S)-130		2000	2200	130	I/O	28	30	6.4	32	18.5	2-c WCDMA	SOT502
BLF7G22L(S)-160		2000	2200	160	I/O	28	43	5.7	30	18	2-c WCDMA	SOT502B
BLF8G22LS-160BV*		2000	2200	160	I/O	32	55	4.6	30	18.5	2-c WCDMA	SOT1120B
BLF6G22(LS)-180PN		2000	2200	180	I/O	32	50	5.6	27.5	17.5	2-c WCDMA	SOT539
BLF6G22(LS)-180RN		2000	2200	180	I/O	30	40	6.5	25	16	2-c WCDMA	SOT502
BLF8G22LS-200GV*		2000	2200	200	I/O	28	48	6.2	28	20.2	2-c WCDMA	SOT1244C
BLF8G22LS-270GV*		2000	2200	270	I/O	28	50	7.3	26	17.8	2-c WCDMA	SOT1244C
BLF8G22LS-400PGV*		2000	2200	400	I/O	28	50	9.0	26	18	2-c WCDMA	SOT1242C
BLF7G22L(S)-200		2110	2170	200	I/O	28	55	5.6	31	18.5	2-c WCDMA	SOT502
BLF7G22L(S)-250P		2110	2170	250	I/O	28	70	5.5	31	18.5	2-c WCDMA	SOT539
BLD6G22L(S)-50	Integrated Doherty	2110	2170	50	I/O	28	8	8.0	40	14	TD-SCDMA	SOT1130

3.7.1.5 2.3 - 2.4 GHz line-up

Type	Product	f_{min} (MHz)	f_{max} (MHz)	P1dB (W)	Matching	Test signal performance						
						VDS (V)	P_L (W)	BO (dB)	η_D (%)	G_p (dB)	Test signal	Package
BLF6G27-10(G)	Driver	2300	2700	10	I	28	2	7.0	20	19	N-CDMA/IS95	SOT975
BLF7G24L(S)-100	Final	2300	2400	100	I/O	28	20	7.0	27	18	N-CDMA/IS95	SOT502
BLF7G24L(S)-140		2300	2400	140	I/O	28	30	6.7	26.5	18.5	N-CDMA/IS95	SOT502
BLF7G24L(S)-160P*		2300	2400	160	I/O	28	30	7.3	27.5	18.5	N-CDMA/IS95	SOT539
BLF8G24L(S)-200P*		2300	2400	200	I/O	28	60	5.2	30	16.5	1-c WCDMA	SOT539

Bold red = new, highly recommended product

* Check status in section 3.1, as this type is not yet released for mass production

3.7.1.6 2.5 - 2.7 GHz line-up

Type	Product	f_{min} (MHz)	f_{max} (MHz)	P1dB (W)	Matching	Test signal performance						
						VDS (V)	P_L (W)	BO (dB)	η_D (%)	G_p (dB)	Test signal	Package
BLF6G27-10(G)	Driver	2300	2700	10	I	28	2	7.0	20	19	N-CDMA/IS95	SOT975
BLF6G27L(S)-40P	Driver/final	2500	2700	40	I/O	28	20	3.0	37	17.5	1-c WCDMA	SOT1121
BLF6G27(S)-45		2500	2700	45	I/O	28	7	8.1	24	18	N-CDMA/IS95	SOT608
BLF6G27L(S)-50BN		2500	2700	50	I/O	28	3	12.2	14.5	16.5	2-c WCDMA	SOT1112
BLF7G27L(S)-75P	Final	2300	2700	75	I/O	28	12	8.0	26	17	N-CDMA/IS95	SOT1121
BLF6G27(LS)-75		2500	2700	75	I/O	28	9	9.2	23	17	N-CDMA/IS95	SOT502
BLF7G27L(S)-90P		2500	2700	90	I/O	28	16	7.5	29	18.5	N-CDMA/IS95	SOT1121
BLF7G27LS-90PG*		2500	2700	90	I/O	28	16	7.5	27.5	17.5	N-CDMA/IS95	SOT1121C
BLF6G27(LS)-100		2500	2700	100	I/O	28	14	8.5	23	17	1-c WCDMA	SOT502
BLF7G27L(S)-100		2500	2700	100	I/O	28	25	6.0	28	18	N-CDMA/IS95	SOT502
BLF6G27(LS)-135		2500	2700	135	I/O	32	20	8.3	22.5	16	N-CDMA/IS95	SOT502
BLF7G27L(S)-140		2500	2700	140	I/O	28	30	6.7	22	16.5	N-CDMA/IS95	SOT502
BLF8G27LS-140		2500	2700	140	I/O	28	50	4.5	31	18	2-c WCDMA	SOT502B
BLF8G27LS-140G*		2500	2700	140	I/O	28	50	4.5	31	18	2-c WCDMA	SOT502E
BLF7G27L(S)-150P		2500	2700	150	I/O	28	30	7.0	26	16.5	N-CDMA/IS95	SOT539
BLF8G27LS-200PGV*		2500	2700	200	I/O	28	32	8.0	23	17	2-c WCDMA	SOT1242C
BLF8G27LS-280PGV*		2500	2700	280	I/O	28	50	7.5	21	16.4	2-c WCDMA	SOT1242C
BLF8G27LS-140V*		2600	2700	140	I/O	32	45	4.9	30	16.5	2-c WCDMA	SOT1244B
BLF7G27L-200PB		2600	2700	200	I/O	32	65	4.9	29	16.5	2-c WCDMA	SOT1110A

3.7.1.7 3.5 - 3.8 GHz line-up

Type	Product	f_{min} (MHz)	f_{max} (MHz)	P1dB (W)	Matching	Test signal performance						
						VDS (V)	P_L (W)	BO (dB)	η_D (%)	G_p (dB)	Test signal	Package
BLF6G38-10(G)	Driver	3400	3600	10	I/O	28	2	7.0	20	14	N-CDMA/IS95	SOT975
BLF6G38(S)-25		3400	3800	25	I/O	28	4.5	7.4	24	15	N-CDMA/IS95	SOT608
BLF6G38(LS)-50	Driver/final	3400	3800	50	I/O	28	9	7.4	23	14	N-CDMA/IS95	SOT502
BLF6G38(LS)-100	Final	3400	3600	100	I/O	28	18.5	7.3	21.5	13	N-CDMA/IS95	SOT502

3.7.1.8 Power LDMOS Doherty designs

Freq band (MHz)	PPEAK (dBm)	POUT-AVG (dBm)	VDS (V)	Gain (dB)	Drain efficiency (%)	Type	Main transistor	Peak transistor
728-821 MHz								
790-821	55.5	47	28	19	42	SYM	1/2 BLF6G10L(S)-260PRN	1/2 BLF6G10L(S)-260PRN
790-821	57.2	49.5	32	20	42	SYM	BLF6G10LS-200RN	BLF6G10LS-200RN
728-768	58	50	32	20.5	47	SYM	BLF6G10LS-200RN	BLF6G10LS-200RN
869-960 MHz								
920-960	46	38	28	24	51	SYM	BLF6G21-10G	BLF6G21-10G
869-894	52	44	28	20	48	SYM	BLF6G10S-45	BLF6G10S-45
869-894	52.7	44.5	28	15	50	3-WAY	BLF6G10S-45	2x BLF6G10S-45
920-960	54.7	47.5	28	17.3	48	SYM	BLF6G10LS-135RN	BLF6G10LS-135RN
920-960	55.1	47.1	28	20.5	44	SYM	1/2 BLF6G10L(S)-260PRN	1/2 BLF6G10L(S)-260PRN
920-960	56.2	48	28	18.5	40	SYM	BLF6G10LS-135RN	BLF6G10LS-135RN
920-960	56.6	50	30	18.8	44.5	SYM	BLF6G10LS-200RN	BLF6G10LS-200RN
920-960	57	49.2	28	15.8	48	SYM	BLF7G10LS-250	BLF7G10LS-250
920-960	57.1	49	30	16.1	46.7	ASYM	BLF8G10LS-160	BLF7G10LS-250
920-960	57.1	49	28	15	48	3-WAY	BLF8G10LS-160	2x BLF8G10LS-160
869-894	57.2	49.3	28	16.5	49.5	SYM	BLF7G10LS-250	BLF7G10LS-250
920-960	57.3	49.3	30	16	50	ASYM	BLF8G10LS-160	BLF7G10LS-250
869-894	57.5	50.8	30	18	48.8	ASYM	BLF6G10LS-200RN	BLF7G10LS-250
925-960	57.7	49.7	28	20.5	40	SYM / MPPM	BLF6G10L(S)-260PRN	BLF6G10L(S)-260PRN
869-894	57.9	52	28	18.2	50.1	SYM / MMPP	BLF6G10LS-260PRN	BLF6G10LS-260PRN
869-894	58	50	32	20.5	46	SYM	BLF6G10-200RN	BLF6G10-200RN
869-894	58.9	52	28	16.1	49.1	ASYM	BLF6G10LS-200RN	2x BLF7G10LS-250
925-960	58.9	50.9	32	22	47	SYM / MMPP	BLF6G10L(S)-260PRN	BLF6G10L(S)-260PRN
869-894	59.2	50.4	28	16	52	3-WAY	BLF7G10LS-250	2x BLF7G10LS-250
1476-1555 MHz								
1526-1555	56.6	48.6	28	18.4	42	SYM	BLF7G15LS-200	BLF7G15LS-200
1476-1511	58.1	49.6	28	16	42	ASYM	BLF7G15LS-200	BLF7G15LS-300P
1476-1511	58.6	50.6	32	16.5	42	SYM	BLF6G15LS-250PBRN	BLF6G15LS-250PBRN
1805-1880 MHz (DCS)								
1805-1880	48	40	28	15.4	42.4	SYM	1/2 BLF6G22LS-40P	1/2 BLF6G22LS-40P
1805-1880	50	42.8	28	15.8	48	SYM	1/2 BLF7G20LS-90P	1/2 BLF7G20LS-90P
1805-1880	52.5	44.5	28	16	44	SYM	1/2 BLF7G21LS-160P	1/2 BLF7G21LS-160P
1845-1880	52.6	45	28	14.5	46.5	SYM	1/2 BLF7G21LS-160P	1/2 BLF7G21LS-160P
1805-1880	54	47	28	16	49	SYM	BLF6G20LS-110	BLF6G20LS-110
1805-1880	55	49	28	15.5	47	SYM	BLF7G21LS-160P	BLF7G21LS-160P
1805-1880	55.4	47.5	31	16.3	49	ASYM	BLF7G20LS-90P	BLF7G21LS-160P
1805-1880	55.5	47	28	16	41	SYM	1/2 BLF7G20L(S)-250P	1/2 BLF7G20L(S)-250P
1805-1880	56.1	48.1	30	15.2	48	ASYM	BLF7G20LS-90P	BLF7G20LS-200
1805-1880	56.5	49	28	32	45.5	ASYM	BLF6G21-10G	BLF7G20LS-200

Bold red = new, highly recommended product

* Check status in section 3.1, as this type is not yet released for mass production

Freq band (MHz)	PPEAK (dBm)	POUT-AVG (dBm)	VDS (V)	Gain (dB)	Drain efficiency (%)	Type	Main transistor	Peak transistor
1805-1880	57.1	49	28	14.3	45.1	3-WAY	BLF7G21LS-160P	2x BLF7G21LS-160P
1805-1880	57.5	49.5	30	16	42	SYM	BLF7G20LS-200	BLF7G20LS-200
1805-1880	57.5	50.5	28	14	48	ASYM	BLF7G20LS-200	BLF7G20LS-250P
1805-1880	57.8	50.4	30	16	41.5	SYM	BLF7G20LS-250P	BLF7G20LS-250P
1805-1880	57.9	50	32	15.5	37	SYM / MMPP	BLF6G20-230PRN	BLF6G20-230PRN
1805-1880	58.2	50	28	16	42	SYM MPPM	BLF7G20LS-250P	BLF7G20LS-250P
1805-1880	58.6	51	28	16	47.6	3-WAY	BLF7G20LS-200	2x BLF7G20LS-200
1805-1880	58.7	51	30	15.8	47	3-WAY	BLF7G20LS-200	2x BLF7G20LS-200
1930-1990 MHz (PCS)								
1930-1990	53	45	28	16.5	40	SYM	BLF6G20-75	BLF6G20-75
1930-1990	54.3	47.4	28	16.7	48.2	SYM	BLF6G20LS-110	BLF6G20LS-110
1930-1990	55.2	47.2	28	16	40	SYM	1/2 BLF7G20LS-250P	1/2 BLF7G20LS-250P
1930-1990	55.5	47.5	28	14.5	46	ASYM	BLF7G20LS-90P	BLF7G20LS-200
1930-1990	55.7	49	28	14.5	48	ASYM	BLF7G21LS-160P	BLF7G20LS-200
1930-1990	56	48	31	15.3	38	SYM	BLF6G20LS-140	BLF6G20LS-140
1930-1990	56	48	28	14.8	45	ASYM	BLF7G20LS-140P	BLF7G20LS-200
1930-1990	57	49	30	17.2	41	SYM	BLF7G20LS-200	BLF7G20LS-200
1930-1990	57	49.5	28	15.1	46	ASYM	BLF7G21LS-160P	2x BLF7G21LS-160P
1930-1990	58.2	50	28	16	40	SYM	BLF7G20LS-250P	BLF7G20LS-250P
1930-1990	56.8	49.1	28	32	42.3	ASYM	BLF6G21-10G	BLF7G20LS-200
1930-1990	58.5	50.5	30	15.7	43	3-WAY	BLF7G20LS-200	2x BLF7G20LS-200
1805-2025 MHz (TD-SCDMA)								
2010-2025	47	39	28	14.4	41	SYM	BLD6G21L(S)-50	BLD6G21L(S)-50
1880-2025	50	42	28	17	46	SYM	1/2 BLF7G20L(S)-90P	1/2 BLF7G20L(S)-90P
2010-2025	50	42	28	17.2	47.2	SYM	1/2 BLF7G20L(S)-90P	1/2 BLF7G20L(S)-90P
1805-2050	52	44.5	28	15.2	41.5	SYM	1/2 BLF7G21LS-160P	1/2 BLF7G21LS-160P
2010-2025	52.2	44	28	15.6	43	SYM	1/2 BLF7G21LS-160P	1/2 BLF7G21LS-160P
1880-1920	52.5	44.5	28	16	44	SYM	1/2 BLF7G21LS-160P	1/2 BLF7G21LS-160P
2110-2170 MHz (UMTS / LTE)								
2110-2170	47	39	28	13	38	SYM	BLD6G22L(S)-50	BLD6G22L(S)-50
2110-2170	48.3	40	28	17	44	SYM	1/2 BLF6G22LS-40P	1/2 BLF6G22LS-40P
2110-2170	48.5	40.5	28	17.2	46	SYM	1/2 BLF6G22L-40P	1/2 BLF6G22L-40P
2110-2170	54.7	46.5	28	16.5	43	SYM	BLF6G22LS-100	BLF6G22LS-100
2110-2170	54.9	47	28	17	43	SYM	BLF7G22L(S)-130	BLF7G22L(S)-130
2110-2170	55	47	28	17	43	SYM	1/2 BLF7G22LS-250P	1/2 BLF7G22LS-250P
2110-2170	55	47	28	15.5	38	SYM	BLF6G22L(S)-130	BLF6G22L(S)-130
2110-2170	55.5	46.4	28	15	43	ASYM	BLF7G22L(S)-130	BLF7G22L(S)-200
2110-2170	55.7	49	28	14.5	47	ASYM	BLF7G22LS-130	BLF7G22LS-200
2110-2170	55.9	47.9	28	17.3	42	SYM	BLF7G22LS-160	BLF7G22LS-160
2110-2170	56	48	28	15	48	3-WAY	BLF7G22L(S)-130	2x BLF7G22L(S)-130
2110-2170	56.5	48.5	28	16.2	41	SYM	BLF7G22L(S)-200	BLF7G22L(S)-200
2110-2170	56.5	49	28	14.2	46	ASYM	BLF7G22LS-160	BLF7G22LS-200
2110-2170	57.2	49.2	28	16	47	3-WAY	BLF7G22LS-160	2x BLF7G22L(S)-160
2110-2170	58	50	32	17.5	40	SYM	BLF7G22LS-250P	BLF7G22LS-250P
2300-2400 MHz (WiBRO / LTE)								
2300-2400	49.5	42	28	14.6	44	SYM	1/2 BLF7G27L(S)-75P	1/2 BLF7G27L(S)-75P
2300-2400	53	45	28	15	42.3	SYM	1/2 BLF7G24LS-160P	1/2 BLF7G24LS-160P
2300-2400	54.1	47	28	15.5	45	SYM	BLF7G24LS-100	BLF7G24LS-100
2300-2400	55	47.5	28	15.2	44	ASYM	BLF7G24LS-100	BLF7G24LS-140
2300-2400	56.2	48.5	30	15	40	SYM	BLF7G24LS-140	BLF7G24LS-140
2300-2400	56.8	48.5	30	15	42	3-WAY	BLF7G24LS-100	2x BLF7G24LS-100
2500-2700 MHz (WiMAX / LTE)								
2620-2690	46.9	39	28	14.6	46.2	ASYM	BLF6G27-10G	1/2 BLF6G27LS-40P
2580-2620	48.2	40	28	14.4	41	SYM	1/2 BLF6G27LS-40P	1/2 BLF6G27LS-40P
2620-2690	48.2	40	28	14.6	44	SYM	1/2 BLF6G27LS-40P	1/2 BLF6G27LS-40P
2570-2620	49.5	42	28	15	43	SYM	1/2 BLF7G27L(S)-75P	1/2 BLF7G27L(S)-75P
2500-2700	50	42	28	15	37.5	SYM	BLF6G27S-45	BLF6G27S-45
2500-2700	50.3	42.3	28	14.5	39	SYM	1/2 BLF7G27LS-90P	1/2 BLF7G27LS-90P
2500-2600	52	44	28	14	40	3-WAY	BLF6G27-45	2x BLF6G27-45
2600-2700	52	44	28	14	40	3-WAY	BLF6G27-45	2x BLF6G27-45
2600-2700	52	44	28	14	40	ASYM	BLF6G27-45	BLF6G27(LS)-100
2500-2700	52.5	44.5	28	14	38	SYM	1/2 BLF7G27LS-150P	1/2 BLF7G27LS-150P
2570-2620	54.1	47	28	15.2	43	SYM	BLF7G27LS-100	BLF7G27LS-100
2620-2690	55.2	47.2	30	15	41	ASYM	BLF7G27LS-100	BLF7G27LS-140
2545-2575	55.3	47.3	28	15	41	ASYM	BLF7G27LS-100	BLF7G27LS-140
2570-2620	55.4	47	28	15	40.4	ASYM	BLF7G27LS-100	BLF7G27LS-140
3300-3800 MHz (WiMAX)								
3400-3600	51	43	28	11.5	32	SYM	BLF6G38-50	BLF6G38-50
3500-3700	52	45	28	10	30	ASYM	BLF6G38LS-50	BLF6G38LS-100

3.7.2 RF power transistors for broadcast / ISM applications

Why choose NXP's RF power transistors for broadcast / ISM applications:

- Highest power
- Best ruggedness
- Best broadband performance
- Best-in-class design support
- Very low thermal resistance design for unrivalled reliability

NXP's leading LDMOS technologies, together with advanced package concepts, enable power amplifiers that deliver best-in-class performance. We offer the industry's highest power and best ruggedness for all broadcast technologies. Our portfolio includes transistors for Ultra High Frequency (UHF), Very High Frequency (VHF), and High Frequency (HF) applications and covers ISM frequency bands.

3.7.2.1 0-1000 MHz (UHF/VHF/HF/ISM) LDMOS line-up

Type	Product	f_{min} (MHz)	f_{max} (MHz)	P1dB (W)	VDS (V)	P_L (W)	η_D (%)	G_p (dB)	Test signal	Package
BLF571	Driver	10	500	20	50	20	70	27,5	CW	SOT467C
BLF645	Final	1	1400	100	32	100	56	18	CW	SOT540A
BLF871(S)		1	1000	100	40	100	60	21	CW	SOT467
BLF647		1	800	300	32	150	60	12,5	CW	SOT540A
BLF572XR(S)*		10	500	200	50	200	70	24	pulsed	SOT1121
BLF647P(S)*		10	1400	200	32	200	70	18	pulsed	SOT1121
BLF573(S)		10	500	300	50	300	70	27.2	CW	SOT502
BLF369		10	500	500	32	500	60	18	CW	SOT800-2
BLF574		10	500	600	50	500	70	26.5	CW	SOT539A
BLF574XR(S)*		10	500	600	50	600	70	26	pulsed	SOT539
BLF578		10	500	1200	50	1000	75	26	CW	SOT539A
BLF578XR(S)*		10	500	1400	50	1400	69	23	pulsed	SOT539
BLF861A		470	860	150	32	150	60	14	CW	SOT540A
BLF174XR(S)		10	128	600	50	600	75	28	pulsed	SOT539
BLF178XR(S)		10	128	1400	50	1400	72	29	pulsed	SOT539

3.7.2.2 UHF 470-860 MHz LDMOS line-up

Type	Product	f_{min} (MHz)	f_{max} (MHz)	P1dB (W)	VDS (V)	P_L (W)	η_D (%)	G_p (dB)	Test signal	Package
BLF642	Driver	1	1400	35	32	35	63	19	CW	SOT467C
BLF871(S)	Final	1	1000	100	40	100	60	21	CW	SOT467
BLF881(S)		1	1000	140	50	140	49	21	CW	SOT467
BLF878		470	860	300	42	300	46	21	CW	SOT979A
BLF884P(S)		470	860	300	50	150	46	21	CW	SOT1121
BLF879P		470	860	500	42	200	47	21	CW	SOT539A
BLF888		470	860	500	50	250	46	19	CW	SOT979A
BLF888A(S)		470	860	600	50	250	46	21	CW	SOT539
BLF888B(S)		470	860	600	50	250	46	21	CW	SOT539

3.7.2.3 2.45 GHz ISM LDMOS transistor line-up

Type	Product	f_{min} (MHz)	f_{max} (MHz)	P1dB (W)	VDS (V)	P_L (W)	η_D (%)	G_p (dB)	Test signal	Package
BLF25M612(G)	Driver	1	2500	12	28	12	60	19	CW	SOT975
BLF2425M7L(S)140	Final	2400	2500	140	28	140	52	17.5	CW	SOT502
BLF2425M6L(S)180P		2400	2500	180	28	180	55	12	CW	SOT539
BLF2425M7L(S)200		2400	2500	200	28	200	52	15	CW	SOT502
BLF2425M7L(S)250P		2400	2500	250	28	250	55	15	CW	SOT539

Bold red = new, highly recommended product

* Check status in section 3.1, as this type is not yet released for mass production

3.7.3 RF power transistors for aerospace and defense

Device naming conventions RF power transistors for aerospace and defense

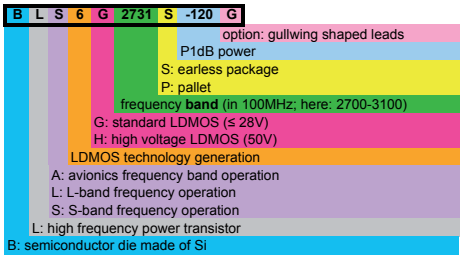

Why choose NXP's microwave RF power transistors

- High gain
- High efficiency
- Highest reliability
- Improved pulse droop and insertion phase
- Improved ruggedness - overdrive without risk to +5 dB
- Reduces component count and helps simplify L- and S-band radar design
- Uses non-toxic, RoHS-compliant packages

3.7.3.1 Avionics LDMOS transistors

Type	Product	f_{min} (MHz)	f_{max} (MHz)	P1dB (W)	VDS (V)	P_L (W)	η_D (%)	G_p (dB)	Test signal	Package
BLA1011-2	Driver	1030	1090	2	36	2	-	16	pulsed	SOT538A
BLA1011-10		1030	1090	10	36	10	40	16	pulsed	SOT467C
BLA1011(S)-200R	Final	1030	1090	200	36	200	50	15	pulsed	SOT502
BLA6G1011-200R		1030	1090	200	28	200	65	20	pulsed	SOT502A
BLA6G1011LS-200RG		1030	1090	200	28	200	65	20	pulsed	SOT502
BLA0912-250R		960	1215	250	36	250	50	13.5	pulsed	SOT502A
BLA1011-300		1030	1090	300	32	300	57	16.5	pulsed	SOT957A
BLA6H0912-500		960	1215	500	50	450	50	17	pulsed	SOT634A
BLA6H1011-600		1030	1090	600	48	600	52	17	pulsed	SOT539A
BLU6H0410L(S)-600P		400	1000	600	50	600	57	20	pulsed	SOT539

3.7.3.2 L-band LDMOS transistors

Type	Product	f_{min} (MHz)	f_{max} (MHz)	P1dB (W)	VDS (V)	P_L (W)	η_D (%)	G_p (dB)	Test signal	Package
BLL6H0514-25	Driver	500	1400	25	50	25	50	19	pulsed	SOT467C
BLL1214-35		1200	1400	35	36	35	43	13	pulsed	SOT467C
BLL6H0514L(S)-130	Final	500	1400	130	50	130	50	17	pulsed	SOT1135
BLL1214-250R		1200	1400	250	36	250	47	13	pulsed	SOT502A
BLL6G1214L-250		1200	1400	250	36	250	45	15	pulsed	SOT502A
BLL6H1214L(S)-250		1200	1400	250	50	250	55	17	pulsed	SOT502
BLL6H1214(LS)-500		1200	1400	500	50	500	50	17	pulsed	SOT539A

Bold red = new, highly recommended product

3.7.3.3 S-band LDMOS transistors

Type	Product	f_{min} (MHz)	f_{max} (MHz)	P1dB (W)	VDS (V)	P_L (W)	η_D (%)	G_p (dB)	Test signal	Package
BLS6G2731-6G	Driver	2700	3100	6	32	6	33	15	pulsed	SOT975C
BLS6G3135(S)-20		3100	3500	20	32	20	45	15.5	pulsed	SOT608
BLS6G2735L(S)-30		2700	3500	30	32	30	50	13	pulsed	SOT1135
BLS2933-100	Final	2900	3300	100	32	100	40	8	pulsed	SOT502A
BLS7G2325L-105		2300	2500	105	30	105	55	16.5	pulsed	SOT502A
BLS6G2731(S)-120		2700	3100	120	32	120	48	13.5	pulsed	SOT502
BLS6G3135(S)-120		3100	3500	120	32	120	43	11	pulsed	SOT502
BLS6G2731S-130		2700	3100	130	32	130	50	12	pulsed	SOT922-1
BLS6G2933S-130		2900	3300	130	32	130	47	12.5	pulsed	SOT922-1
BLS7G2933S-150		2900	3300	150	32	150	47	13.5	pulsed	SOT922-1
BLS7G2729L(S)-350P		2700	2900	350	32	350	50	13.5	pulsed	SOT539
BLS7G3135L(S)-350P		3100	3500	350	32	350	43	10	pulsed	SOT539

3.7.4 Gallium Nitride (GaN) RF power amplifiers

Device naming conventions GaN RF power amplifiers

C L F 1G 0040 S # P

P: push-pull indicator, P = push-pull type; no P means single-ended transistor
2 to 1500: nominal P3dB in Watts: eg 50 = 50W
S earless type, S = earless; no S means eared package
35 to 60: upper frequency, 10x GHz value: 35 = 3.5GHz; 60 = 6.0GHz
00 to 40: lower frequency, 10x GHz value: 00 = 0GHz or DC; 40 = 4.0GHz
1G: technology generation: 1G = 1st generation
F: package style: F = ceramic, P = overmolded plastic
L: high frequency power transistor
C: primary material identifier: C = wide band-gap compound materials, eg GaN

Type	f_{min} (MHz)	f_{max} (MHz)	P_{out} (W)	Matching	VDS (V)	η_D (%)	G_p (dB)	Test signal	Package	Applications
CLF1G0060-10*	0	6000	10	-	50	54	14	Pulsed	SOT1227	Cellular, WiMAX, ISM, avionics, S-band, general purpose
CLF1G0060-30*	0	6000	30	-	50	54	14	Pulsed	SOT1227	Cellular, WiMAX, ISM, avionics, S-band, general purpose
CLF1G0035-50*	0	3500	50	-	50	54	14.2	Pulsed	SOT467	Cellular, WiMAX, ISM, avionics, S-band, general purpose
CLF1G0035-100*	0	3500	100	-	50	52	14.8	Pulsed	SOT467	Cellular, WiMAX, ISM, avionics, S-band, general purpose

3.8 Wireless microcontroller chipsets and modules

Type	Module/ single chip	Application	TX power	Receiver sensitivity	TX current	RX current	Operating voltage	Form factor
JN5148-001-M00	Module	2.4-2.4835 GHz JenNet & IEEE802.15.4	+2.5 dBm	–95 dBm	15 mA	17.5 mA	2.3-3.6 V	Integral antenna 18 x 32 mm
JN5148-001-M03	Module	2.4-2.4835 GHz JenNet & IEEE802.15.4	+2.5 dBm	–95 dBm	15 mA	17.5 mA	2.3-3.6 V	U.FL connector 18 x 30 mm
JN5148-001-M04	Module	2.4-2.4835 GHz JenNet & IEEE802.15.4	+20 dBm	–98 dBm	110mA	23 mA	2.7-3.6 V	U.FL connector 18 x 41 mm
JN5142-J01	Single chip	2.4-2.4835 GHz JenNet-IP	+2.5 dBm	–95 dBm	15 mA	17.5 mA	2.3-3.6 V	6 x 6 mm QFN40
JN5148-J01	Single chip	2.4-2.4835 GHz JenNet-IP	+2.5 dBm	–95 dBm	15 mA	17.5 mA	2.3-3.6 V	8 x 8 mm QFN56
JN5142-001	Single chip	2.4-2.4835 GHz RF4CE & IEEE802.15.4	+2.5 dBm	–95 dBm	15 mA	17.5 mA	2.3-3.6 V	6 x 6 mm QFN40
JN5148-001	Single chip	2.4-2.4835 GHz JenNet & IEEE802.15.4	+2.5 dBm	–95 dBm	15 mA	17.5 mA	2.3-3.6 V	8 x 8 mm QFN56
JN5148-Z01	Single chip	2.4-2.4835 GHz ZigBee PRO	+2.5 dBm	–95 dBm	15 mA	17.5 mA	2.3-3.6 V	8 x 8 mm QFN56

Bold red = new, highly recommended product

* Check status in section 3.1, as this type is not yet released for mass production

4. Design support

This chapter will guide you through the available tools, documents, materials, and links that ease the design-in of our products.

4.1 Knowing NXP's RF portfolio

Beyond this RF Manual, you can learn about NXP's broad RF portfolio through the NXP Technical Academy, various webinars and the NXP channel on YouTube.

The NXP Technical Academy provides training modules where you can learn about our products and applications, watch hands-on trainings and even get certified! The training modules can be viewed on mobile devices as well.

NXP provides RF webinars on a regular basis. (www.nxp.com/news/meet-nxp/webinars-and-podcasts.html#rf)

On NXP's YouTube channel (www.youtube.com/user/nxpsemiconductors), there are short videos that explain NXP's portfolio, application information, tips and tricks to optimize your systems performance, and more.

4.2 Product selection on NXP.com

Every RF product has its own webpage on the NXP website. Pages can be accessed in several ways: by product tree, by application area, or via cross-reference search. Or, simply type 'nxp <product>' in the Google search bar.

Product tree and parametric search

The product tree (www.nxp.com/products/rf) categorizes the product by function. The parametric search tool allows you to refine the selection based on performance requirements.

Application area

To find out what NXP offers in each application area, use the Explore Application section of the NXP website.

Cross reference

NXP maintains a cross-reference of competitor products and NXP alternatives. This list can be searched online via the search tool bar on the NXP website or off-line by installing the X-Reference-Tool.

4.3 Product evaluation

NXP offers a broad range of support material for evaluating RF products and optimizing the performance of your application.

Data sheets and application notes

The first chapter of this RF Manual includes application diagrams, recommended type numbers, and product highlights. More in-depth application information is available in the second chapter, in product data sheets or in the Application Notes section of the NXP website (www.nxp.com/products/all_appnotes).

Simulation tools

To help you evaluate our products in your specific application, NXP offers various simulation tools, including small-signal touchstone S-parameters and parametric models that let you customize the biasing conditions. The parametric models are based on best-in-class Mextram models and RFLDMOS models developed by Philips Research, a recognized leader in physics-based models. The parametric models fully support AC, DC, S-parameter, harmonic balance, and time-domain simulations. These models allow designers to assess the performance of complex systems at an early stage of the development process.

The models are available for Advanced Design System (ADS), Microwave Office (MWO) and Ansoft Designer. Spice versions of the parametric models, which can be used with almost any commercial design tool, are also available.

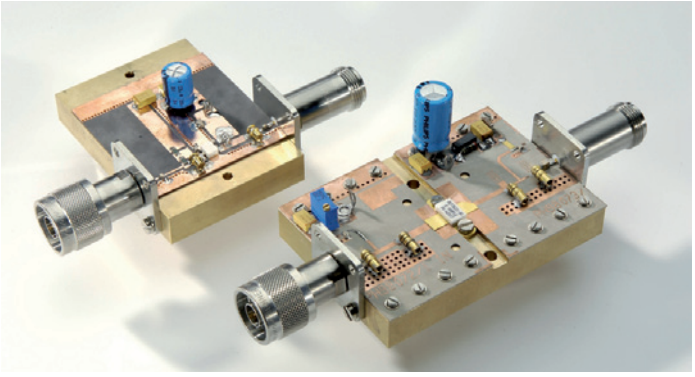

Customer evaluation kits and samples

Several kits are available for evaluation of our products. Boards are provided with industry-standard RF connectors to facilitate measurements and integration in your application. The features and content of each kit are described on the NXP website and are listed on the corresponding product page. On the Customer Evaluation Kits page you can also find support materials, such as the latest user manuals and software updates. You can order small quantities of all products to build and evaluate prototypes. To obtain a kit or order samples, please contact your local NXP representative or authorized distributor.

4.4 Additional design-in support

If you need additional design-in support, please contact your local NXP sales representative or authorized distributor. You can also submit a question using the web form on the NXP website.

4.5 Application notes

Product category	Filename	Description
Amplifiers	AN11152	Reducing the Spurs at RF_out caused by the biasing choke during fast switching on and off in TDD system
Amplifiers	AN11148	BGU7003 1900MHz to 2100MHz LNA Application
PLL's and Oscillators	AN11144	Universal Single LNB with TFF101x FIMOD IC
Amplifiers	AN11135	Replacing HMC625 by NXP BGA7204
Amplifiers	AN11130	Bias module for 50 V GaN demonstration boards
Transistors	AN11118	BFU725F/N1 1.5 GHz LNA evaluation board
Amplifiers	AN11103	Externally-matched 900 MHz LNA using BGU7005
Transistors	AN11102	BFU725F/N1 2.4 GHz LNA evaluation board
Amplifiers	AN11101	BGU7007 GPS front end evaluation board
Amplifiers	AN11091	Ohmic FM LNA for embedded Antenna in Portable applications with BGU6102
Amplifiers	AN11090	50 Ohm FM LNA for embedded Antenna in Portable applications with BGU6102
Amplifiers	AN11086	BGU7003 LNA application for GPS L2 band
Amplifiers	AN11072	BGU7003 400MHz and 900 MHz applicaiton
Amplifiers	AN11068	BGU7005 matching options for improved LTE jammer immunity
Transistors	AN11066	SDARS active antenna 1st stage LNA with BFU730F, 2.33 GHz
Amplifiers	AN11062	Broadband DVB-T UHF power amplifier with the BLF888A
Amplifiers	AN11035	50 Ohm FM LNA for embedded Antenna in Portable applications with BGU7003W
Amplifiers	AN11034	High Ohmic FM LNA for embedded Antenna in Portable applications with BGU7003W
Transistors	AN11024	SDARS active antenna 2nd stage LNA with BFU690, 2.33 GHz
Transistors	AN11010	Single stage Ku band LNA using BFU730F
Transistors	AN11007	Single stage 5-6 GHz WLAN LNA with BFU730F
Transistors	AN11006	Single stage 2.3_2.7GHz LNA with BFU730F
Amplifiers	AN10967	BLF578 demo for 352 MHz 1kW CW power
Amplifiers	AN10953	BLF645 10 MHz to 600 MHz 120 W amplifier
Amplifiers	AN10951	1805 MHz to 1880 MHz asymmetrical Doherty amplifier with the BLF7G20LS-90P and BLF7G21LS-160P
Amplifiers	AN10945	174 MHz to 230 MHz DVB-T power amplifier with the BLF881
Amplifiers	AN10944	1930 MHz to 1990 MHz Doherty amplifier using the BLF7G20LS-200
Amplifiers	AN10933	2.5 GHz to 2.7 GHz Doherty power amplifier using the BLF7G27LS-150P
Amplifiers	AN10923	1.5GHz Doherty power amplifier for base station applications using the BLF6G15L-250PBRN
Amplifiers	AN10921	BLF7G20LS-200 Doherty 1.805-1.88 GHz RF power amplifier
Amplifiers	AN10896	Mounting and Soldering of RF transistors
Amplifiers	AN10885	Doherty RF performance analysis using the BLF7G22LS-130
Amplifiers	AN10882	Dependency of BLF578 gate bias voltage on temperature
Amplifiers	AN10869	Broadband DVB-T UHF power amplifier with the BLF888
Amplifiers	AN10858	174 MHz to 230 MHz DVB-T power amplifier with the BLF578
Amplifiers	AN10847	Doherty RF performance using the BLF6G20-230PRN
Amplifiers	AN10800	Using the BLF578 in the 88 MHz to 108 MHz FM band
Amplifiers	AN10714	Using the BLF574 in the 88-108 MHz FM band

4.6 Simulation models

4.6.1 Simulation models for RF power devices

Updates of this overview are available in PDF format at: http://www.nxp.com/wcm_documents/models/RFPower_Model_Overview.pdf

Type	ADS model	Microwave Office model
BLA6G1011-200R	Available	Available
BLA6G1011L-200RG	Available	Available
BLA6G1011LS-200RG	Available	Available
BLA6H0912-500	Available	Available
BLA6H1011-600	Available	Available
BLF369	Available	
BLF3G21-6	Available	
BLF571	Available	Available
BLF573	Available	Available
BLF573S	Available	Available
BLF574	Available	Available
BLF578	Available	Available
BLF645	Available	Available
BLF6G10-135RN	Available	Available
BLF6G10-200RN	Available	
BLF6G10-45	Available	Available
BLF6G10L-260PRN	Available	
BLF6G10L-40BRN	Available	
BLF6G10LS-135RN	Available	Available
BLF6G10LS-200RN	Available	
BLF6G10LS-260PRN	Available	
BLF6G10S-45	Available	Available
BLF6G15L-250PBRN	Available	
BLF6G15L-40BRN	Available	
BLF6G20-180RN	Available	
BLF6G20-230PRN	Available	
BLF6G20-45	Available	Available
BLF6G20LS-180RN	Available	
BLF6G20S-230PRN	Available	
BLF6G20S-45	Available	Available
BLF6G21-10G	Available	Available
BLF6G22-180RN	Available	
BLF6G22-45	Available	Available
BLF6G22L-40P	Available	
BLF6G22LS-180RN	Available	
BLF6G22LS-40P	Available	
BLF6G22S-45	Available	Available
BLF6G27-10	Available	
BLF6G27-10G	Available	Available
BLF6G27-135	Available	
BLF6G27-45	Available	Available
BLF6G27-75	Available	
BLF6G27L-40P	Available	
BLF6G27LS-135	Available	
BLF6G27LS-40P	Available	
BLF6G27LS-75	Available	
BLF6G27S-45	Available	Available
BLF6G38-10	Available	
BLF6G38-100	Available	

Type	ADS model	Microwave Office model
BLF6G38-10G	Available	Available
BLF6G38-25	Available	Available
BLF6G38-50	Available	Available
BLF6G38LS-100	Available	
BLF6G38LS-50	Available	Available
BLF6G38S-25	Available	Available
BLF7G15LS-300P	Available	
BLF7G15LS-200	Available	
BLF7G20L-200	Available	
BLF7G20L-250P	Available	
BLF7G20L-90P	Available	
BLF7G20LS-140P	Available	
BLF7G20LS-200	Available	
BLF7G20LS-250P	Available	
BLF7G20LS-90P	Available	
BLF7G21L-160P	Available	
BLF7G21LS-160P	Available	
BLF7G22L-130	Available	Available
BLF7G22L-160	Available	
BLF7G22L-200	Available	
BLF7G22L-250P	Available	
BLF7G22LS-130	Available	Available
BLF7G22LS-160	Available	
BLF7G22LS-200	Available	
BLF7G22LS-250P	Available	
BLF7G24L-100	Available	
BLF7G24L-140	Available	
BLF7G24LS-100	Available	
BLF7G24LS-140	Available	
BLF7G27L-100	Available	
BLF7G27L-140	Available	
BLF7G27L-150P	Available	
BLF7G27L-200PB	Available	
BLF7G27L-75P	Available	
BLF7G27L-90P	Available	
BLF7G27LS-100	Available	
BLF7G27LS-140	Available	
BLF7G27LS-150P	Available	
BLF7G27LS-75P	Available	
BLF7G27LS-90P	Available	
BLF871	Available	Available
BLF871S	Available	Available
BLF878	Available	Available
BLF881	Available	Available
BLF881S	Available	Available
BLF888	Available	
BLF888A	Available	Available
BLF888AS	Available	Available
BLL6H0514-25	Available	Available
BLL6H0514L-130	Available	Available
BLL6H0514LS-130	Available	Available
BLL6H1214-500	Available	
BLL6H1214L-250	Available	Available
BLL6H1214LS-250	Available	Available
BLM6G22-30	Available	
BLS6G2731-6G	Available	
BLS6G2731S-130	Available	Available
BLS6G3135-120	Available	Available
BLS6G3135-20	Available	
BLS6G3135S-120	Available	Available
BLS6G3135S-20	Available	

4.6.2 Simulation models for RF bipolar wideband transistors

				ADS 2009 design kit v2.2			Microwave Office design kit			Ansoft Designer design kit		
Type	Evaluation board	S-parameters	Spice model	S-parameters	Spice model	Mextram model	S-parameters	Spice model	Mextram model	S-parameters	Spice model	Mextram model
BFG67		√	√	√	√		√	√		√	√	
BFG67/X			√		√			√		√	√	
BFG10			√		√			√		√	√	
BFG10W			√		√			√		√	√	
BFG10W/X			√		√			√		√	√	
BFG135		√	√	√	√		√	√		√	√	
BFG198		√	√	√	√		√	√		√	√	
BFG21W	√	√	√	√	√		√	√		√	√	
BFG25A/X		√	√	√	√		√	√		√	√	
BFG25AW/X			√		√			√		√	√	
BFG31		√	√	√	√		√	√		√	√	
BFG35		√	√	√	√		√	√		√	√	
BFG310/XR		√	√	√	√		√	√		√	√	
BFG310W/XR		√	√	√	√		√	√		√	√	
BFG325/XR		√	√	√	√		√	√		√	√	
BFG325W/XR		√	√	√	√		√	√		√	√	
BFG403W		√	√	√	√		√	√		√	√	
BFG410W	√	√	√	√	√		√	√		√	√	
BFG424F		√	√	√	√		√	√		√	√	
BFG424W	√	√	√	√	√		√	√		√	√	
BFG425W	√	√	√	√	√		√	√		√	√	
BFG480W	√	√	√	√	√		√	√		√	√	
BFG505		√	√	√	√		√	√		√	√	
BFG505/X			√		√			√		√	√	
BFG505W/X			√		√			√		√	√	
BFG520		√	√	√	√		√	√		√	√	
BFG520W		√	√	√	√		√	√		√	√	
BFG520X			√		√			√		√	√	
BFG520/XR			√		√			√		√	√	
BFG540		√	√	√	√		√	√		√	√	
BFG540/X			√		√			√		√	√	
BFG540/XR			√		√			√		√	√	
BFG540W		√	√	√	√		√	√		√	√	
BFG541		√	√	√	√		√	√		√	√	
BFG590		√	√	√	√		√	√		√	√	
BFG590/X			√		√			√		√	√	
BFG591		√	√	√	√		√	√		√	√	
BFG92A/X			√		√			√		√	√	
BFG93A		√	√	√	√		√	√		√	√	
BFG94		√	√	√	√		√	√		√	√	
BFG97		√	√	√	√		√	√		√	√	
BFM505		√	√	√	√		√	√		√	√	
BFM520		√	√	√	√		√	√		√	√	
BFQ149		√	√	√	√		√	√		√	√	
BFG18A		√	√	√	√		√	√		√	√	
BFQ19		√	√	√	√		√	√		√	√	
BFQ540			√		√			√		√	√	
BFQ67		√	√	√	√		√	√		√	√	
BFQ67W		√	√	√	√		√	√		√	√	
BFR106		√	√	√	√		√	√		√	√	
BFR505		√	√	√	√		√	√		√	√	
BFR505T			√		√			√		√	√	
BFR520		√	√	√	√		√	√		√	√	
BFR540		√	√	√	√		√	√		√	√	
BFR92A		√	√	√	√		√	√		√	√	
BFR92AW		√	√	√	√		√	√		√	√	
BFR93A		√	√	√	√		√	√		√	√	
BFR93AW		√	√	√	√		√	√		√	√	
BFS17		√	√	√	√		√	√		√	√	
BFS17A		√	√	√	√		√	√		√	√	
BFS17W		√	√	√	√		√	√		√	√	
BFS25A		√	√	√	√		√	√		√	√	
BFS505		√	√	√	√		√	√		√	√	
BFS520		√	√	√	√		√	√		√	√	

4.6.2 Simulation models for RF bipolar wideband transistors (continued)

				ADS 2009 design kit v2.2			Microwave Office design kit			Ansoft Designer design kit		
Type	Evaluation board	S-parameters	Spice model	S-parameters	Spice model	Mextram model	S-parameters	Spice model	Mextram model	S-parameters	Spice model	Mextram model
BFS540		√	√	√	√		√	√		√	√	
BFT25		√		√			√					
BFT25A		√	√	√	√		√	√		√	√	
BFT92		√	√	√	√		√	√		√	√	
BFT92W		√	√	√	√		√	√		√	√	
BFT93		√	√	√	√		√	√		√	√	
BFT93W		√	√	√	√		√	√		√	√	
BFU725F	√	√	√	√	√		√	√		√	√	
BFU725F/N1	√	√	√	√	√		√	√		√	√	
BFU610F	√	√	√		√	√		√			√	
BFU630F	√	√	√		√	√		√			√	
BFU660F	√	√	√		√	√		√			√	
BFU690F	√	√	√		√	√		√			√	
BFU710F	√	√	√		√	√		√			√	
BFU730F	√	√	√		√			√			√	
BFU730LX	√	√				√						
BFU760F	√	√	√		√	√		√			√	
BFU790F	√	√	√		√	√		√			√	
PBR941		√	√	√	√		√	√		√	√	
PBR951		√	√	√	√		√	√		√	√	
PRF947		√	√	√	√		√	√		√	√	
PRF949		√	√	√	√		√	√		√	√	
PRF957		√	√	√	√		√	√		√	√	

4.6.3 Simulation models for RF MOSFET transistors

				ADS 2009 design kit v2.2			Microwave Office design kit			Ansoft Designer design kit		
Type	Evaluation board	S-parameters	Spice model	S-parameters	Spice model	Mextram model	S-parameters	Spice model	Mextram model	S-parameters	Spice model	Mextram model
BF1211		√		√			√			√		
BF1211R		√		√			√			√		
BF1211WR		√		√			√			√		
BF1212		√		√			√			√		
BF1212R		√		√			√			√		
BF1212WR		√		√			√			√		
BF511		√		√			√			√		
BF513		√		√			√			√		
BF862		√	√	√			√			√		
BF904			√		√			√			√	
BF908			√		√			√			√	
BF909			√		√			√			√	
BF998			√		√			√			√	

4.6.4 Simulation models for RF varicap diodes

				ADS 2009 design kit v2.2			Microwave Office design kit			Ansoft Designer design kit		
Type	Evaluation board	S-parameters	Spice model	S-parameters	Spice model	Mextram model	S-parameters	Spice model	Mextram model	S-parameters	Spice model	Mextram model
BB145B			√		√			√			√	
BB149			√		√			√			√	
BB149A			√		√			√			√	
BB156			√		√			√			√	
BB179			√		√			√			√	
BB179B			√		√			√			√	
BB201			√		√			√			√	
BB202			√		√			√			√	
BB207			√		√			√			√	
BB208-2			√		√			√			√	

4.6.5 Simulation models for RF MMIC amplifiers

				ADS 2009 design kit v2.2			Microwave Office design kit			Ansoft Designer design kit		
Type	Evaluation board	S-parameters	Spice model	S-parameters	Spice model	Mextram model	S-parameters	Spice model	Mextram model	S-parameters	Spice model	Mextram model
BGA2001	√	√		√			√			√		
BGA2002	√											
BGA2003	√	√		√			√			√		
BGA2711	√	√		√			√			√		
BGA2748	√	√		√			√			√		
BGA2771	√	√		√			√			√		
BGA2776	√	√		√			√			√		
BGA2709	√	√		√			√			√		
BGA2712	√	√		√			√			√		
BGA2714	√											
BGA2715	√	√		√			√			√		
BGA2716	√	√		√			√			√		
BGA2717		√		√			√			√		
BGA2011	√	√		√			√			√		
BGA2012	√	√		√			√			√		
BGA2031	√											
BGA6289	√	√		√			√			√		
BGA6489	√	√		√			√			√		
BGA6589	√	√		√			√			√		
BGA2800	√	√		√			√			√		
BGA2801	√	√		√			√			√		
BGA2815	√	√		√			√			√		
BGA2816	√	√		√			√			√		
BGA2850	√	√		√			√			√		
BGA2865	√	√		√			√			√		
BGA2866	√	√		√			√			√		
BGA7024	√	√										
BGA7027	√	√										
BGA7124	√	√										
BGA7127	√	√		√			√			√		
BGM1011	√	√		√			√			√		
BGM1012	√	√		√			√			√		
BGM1013	√	√		√			√			√		
BGM1014	√	√		√			√			√		
BGU6102	√											
BGU7031	√											
BGU7032	√											
BGU7033	√											
BGU7041	√											
BGU7042	√											
BGU7044	√											
BGU7045	√											
BGU7050	√											
BGU7051	√											
BGU7052	√											
BGU7053	√											
BGU7061	√											
BGU7062	√											
BGU7063	√											
BGU7064	√											
BGU7003	√	√										
BGU7003W	√											
BGU7004	√	√										
BGU7005	√	√										
BGU7007	√	√										
BGU8007	√	√										

5. Cross-references & replacements

NXP cross-references:
http://www.nxp.com/xref/nxp?typenumber

NXP end-of-life:
http://www.nxp.com/products/eol/

5.1 Cross-references: manufacturer types versus NXP types

In alphabetical order of manufacturer type

Abbreviations:

Base station	Base station power transistors
Broadcasts	Broadcast power transistors
BS diode	Band switch diode
CATV OR	CATV optical receiver
CATV PD	CATV power doubler
CATV PPA	CATV push-pull amplifier
CATV PPA/HG	CATV push-pull amplifier high gain
CATV RA	CATV reverse amplifier
FET	Field-effect transistor
A&D	Microwave power transistors
MMIC	Monolithic microwave integrated circuit
Varicap	Varicap diode
WB trs 1-4	Wideband transistor 1-4 generation
WB trs 5-7	Wideband transistor 5-7 generation

Manufacturer type	Manufacturer	NXP type	Product family
3001	Microsemi	BLS7G3135LS-350P	A&D
3003	Microsemi	BLS7G3135L-350P	A&D
3005	Microsemi	BLS6G3135S-20	A&D
10502	Microsemi	BLA1011-200R	A&D
AH125	Triquint	BGA7127	MMIC
SXB-4089	RFMD	BGA7127	MMIC
0510-50A	Microsemi	BLF1043	Broadcast
1011LD110A	Microsemi	BLA1011-300	A&D
1011LD110B	Microsemi	BLA1011S-200	A&D
1014-12	Microsemi	BLL1214-250R	A&D
1014-2	Microsemi	BLL1214-35	A&D
1014-6A	Microsemi	BLL6G1214L-250	A&D
10AM20	Microsemi	BLF1046	Broadcast
1617-35	Microsemi	BLL6G1214LS-250	A&D
1SS314	Toshiba	BA591	BS diode
1SS356	Rohm	BA591	BS diode
1SS381	Toshiba	BA277	BS diode
1SS390	Rohm	BA891	BS diode
1SV172	Toshiba	BAP50-04	PIN diode
1SV214	Toshiba	BB149	Varicap
1SV214	Toshiba	BB149A	Varicap
1SV215	Toshiba	BB153	Varicap
1SV228	Toshiba	BB201	Varicap
1SV231	Toshiba	BB152	Varicap
1SV232	Toshiba	BB148	Varicap
1SV233	Sanyo	BAP70-03	PIN diode
1SV234	Sanyo	BAP64-04	PIN diode
1SV239	Toshiba	BB145B	Varicap
1SV241	Sanyo	BAP64-02	PIN diode
1SV246	Sanyo	BAP64-04W	PIN diode

Manufacturer type	Manufacturer	NXP type	Product family
1SV247	Sanyo	BAP70-02	PIN diode
1SV248	Sanyo	BAP50-02	PIN diode
1SV249	Sanyo	BAP50-04W	PIN diode
1SV250	Sanyo	BAP50-03	PIN diode
1SV251	Sanyo	BAP50-04	PIN diode
1SV252	Toshiba	BAP50-04W	PIN diode
1SV254	Toshiba	BB179	Varicap
1SV263	Sanyo	BAP50-02	PIN diode
1SV264	Sanyo	BAP50-04W	PIN diode
1SV266	Sanyo	BAP50-03	PIN diode
1SV267	Sanyo	BAP50-04	PIN diode
1SV269	Toshiba	BB148	Varicap
1SV270	Toshiba	BB156	Varicap
1SV271	Toshiba	BAP50-03	PIN diode
1SV278	Toshiba	BB179	Varicap
1SV279	Toshiba	BB179	Varicap
1SV282	Toshiba	BB178	Varicap
1SV282	Toshiba	BB187	Varicap
1SV283	Toshiba	BB178	Varicap
1SV283	Toshiba	BB187	Varicap
1SV284	Toshiba	BB156	Varicap
1SV288	Toshiba	BB152	Varicap
1SV290	Toshiba	BB182	Varicap
1SV294	Sanyo	BAP70-03	PIN diode
1SV305	Toshiba	BB202	Varicap
1SV307	Toshiba	BAP51-03	PIN diode
1SV308	Toshiba	BAP51-02	PIN diode
1T362	PEC	BB149	Varicap
1T362A	PEC	BB149A	Varicap
1T363A	PEC	BB153	Varicap

Manufacturer type	Manufacturer	NXP type	Product family
1T368A	PEC	BB148	Varicap
1T369	PEC	BB152	Varicap
1T379	PEC	BB131	Varicap
1T397	PEC	BB152	Varicap
1T399	PEC	BB148	Varicap
1T402	PEC	BB179B	Varicap
1T403	PEC	BB178	Varicap
1T404A	PEC	BB187	Varicap
1T405A	PEC	BB187	Varicap
1T406	PEC	BB182	Varicap
1T408	PEC	BB187	Varicap
2324-12L	Microsemi	BLS6G2731S-120	A&D
2324-20	Microsemi	BLS6G2731-6G	A&D
2324-25	Microsemi	BLS6G2731-120	A&D
2424-25	Microsemi	BLS6G2731S-130	A&D
2F1G20DS	RFHIC	CGD1040Hi	CATV PD
2F1G20DS	RFHIC	CGD1042H	CATV PD
2F1G20P	RFHIC	CGY1041	CATV PP
2F1G22DS	RFHIC	CGD1042H	CATV PD
2F1G22DS	RFHIC	CGD1042Hi	CATV PD
2F1G22DS	RFHIC	CGD982HCi	CATV PD
2F1G23P	RFHIC	CGY1041	CATV PP
2F1G23P	RFHIC	CGY1043	CATV PP
2F1G24D	RFHIC	CGD1044Hi	CATV PD
2F1G24D	RFHIC	CGD985HCi	CATV PD
2F1G24DS	RFHIC	CGD1044H	CATV PD
2F722DS	RFHIC	BGD816L	CATV PD
2F8718P	RFHIC	BGY885A	CATV PP
2F8719DS	RFHIC	BGD812	CATV PD
2F8720DS	RFHIC	BGD814	CATV PD
2F8723P	RFHIC	BGY887	CATV PP
2F8734P	RFHIC	CGY888C	CATV PP
2N4856	Standard	BSR56	FET
2N4857	Standard	BSR57	FET
2N4858	Standard	BSR58	FET
2SC4094	Renesas Electronics	BFG520/XR	WB trs 1-4
2SC4095	Renesas Electronics	BFG520/XR	WB trs 1-4
2SC4182	Renesas Electronics	BFS17W	WB trs 1-4
2SC4184	Renesas Electronics	BFS17W	WB trs 1-4
2SC4185	Renesas Electronics	BFS17W	WB trs 1-4
2SC4186	Renesas Electronics	BFR92AW	WB trs 1-4
2SC4226	Renesas Electronics	PRF957	WB trs 1-4
2SC4227	Renesas Electronics	BFQ67W	WB trs 1-4
2SC4228	Renesas Electronics	BFS505	WB trs 1-4
2SC4247	Toshiba	BFR92AW	WB trs 1-4
2SC4248	Toshiba	BFR92AW	WB trs 1-4
2SC4315	Toshiba	BFG520/XR	WB trs 1-4
2SC4320	Toshiba	BFG520/XR	WB trs 1-4
2SC4321	Toshiba	BFQ67W	WB trs 1-4
2SC4325	Toshiba	BFS505	WB trs 1-4
2SC4394	Toshiba	PRF957	WB trs 1-4
2SC4536	Renesas Electronics	BFQ19	WB trs 1-4
2SC4537	Renesas Electronics	BFR93AW	WB trs 1-4
2SC4592	Renesas Electronics	BFG520/XR	WB trs 1-4
2SC4593	Renesas Electronics	BFS520	WB trs 1-4
2SC4703	Renesas Electronics	BFQ19	WB trs 1-4
2SC4784	Renesas Electronics	BFS505	WB trs 1-4
2SC4807	Renesas Electronics	BFQ18A	WB trs 1-4
2SC4842	Toshiba	BFG540W/XR	WB trs 1-4
2SC4899	Renesas Electronics	BFS505	WB trs 1-4
2SC4900	Renesas Electronics	BFG520/XR	WB trs 1-4
2SC4901	Renesas Electronics	BFS520	WB trs 1-4
2SC4988	Renesas Electronics	BFQ540	WB trs 1-4
2SC5011	Renesas Electronics	BFG540W/XR	WB trs 1-4
2SC5012	Renesas Electronics	BFG540W/XR	WB trs 1-4
2SC5065	Toshiba	PRF957	WB trs 1-4
2SC5085	Toshiba	PRF957	WB trs 1-4
2SC5087	Toshiba	BFG520/XR	WB trs 1-4
2SC5088	Toshiba	BFG540W/XR	WB trs 1-4
2SC5090	Toshiba	BFS520	WB trs 1-4
2SC5092	Toshiba	BFG520/XR	WB trs 1-4
2SC5095	Toshiba	BFS505	WB trs 1-4
2SC5107	Toshiba	BFS505	WB trs 1-4
2SC5463	Toshiba	BFQ67W	WB trs 1-4
2SC5508	Renesas Electronics	BFU660F	WB trs 5-7
2SC5508	Renesas Electronics	BFU660F	WB trs 5-7
2SC5593	Renesas Electronics	BFG410W	WB trs 5-7

Manufacturer type	Manufacturer	NXP type	Product family
2SC5594	Renesas Electronics	BFG425W	WB trs 5-7
2SC5623	Renesas Electronics	BFG410W	WB trs 5-7
2SC5624	Renesas Electronics	BFG425W	WB trs 5-7
2SC5631	Renesas Electronics	BFQ540	WB trs 1-4
2SC6023	Sanyo	BFG424W	WB trs 5-7
2SK210BL	Renesas Electronics	PMBFJ309	FET
2SK508	Renesas Electronics	PMBFJ308	FET
3SK290	Renesas Electronics	BF998WR	FET
AD8376	ADI	BGA7350	MMIC
AD8376	ADI	BGA7351	MMIC
ADL5354	ADI	BGX7221	MMIC
ADL5356	ADI	BGX7221	MMIC
ADL5358	ADI	BGX7220	MMIC
ADL5372	ADI	BGX710x	MMIC
ADL5375	ADI	BGX710x	MMIC
ADL5812	ADI	BGX7221	MMIC
ADRF660x	ADI	BGX721x	MMIC
AH115-S8G	Triquint	BLF8G27LS-140V	Base station
AH116-S8G	Triquint	BLF6G10-135RN	Base station
AH118	Triquint	BGA7024	MMIC
AH118	Triquint	BGA7024	MMIC
AH118	Triquint	BGA7124	MMIC
AH118	Triquint	BGA7124	MMIC
AH125	Triquint	BGA7027	MMIC
AH125	Triquint	BGA7127	MMIC
AH212-EG	Triquint	BLF6G38-10	Base station
AH212-S8G	Triquint	BLF6G38-100	Base station
AH215	Triquint	BGA7130	MMIC
AH215	Triquint	BGA7130	MMIC
AH215-S8G	Triquint	BLF6G27-10	Base station
AH225-S8G	Triquint	BLF6G27-10G	Base station
AH312-S8G	Triquint	BLF7G24L-100	Base station
AH314-G	Triquint	BLF6G27LS-100	Base station
AH315-G	Triquint	BLF6G10-160RN	Base station
AH315-G	Triquint	BLF6G10-200RN	Base station
AH315-G	Triquint	BLF7G24L-140	Base station
AH315-G	Triquint	BLF7G24L-160P	Base station
AH315-G	Triquint	BLF6G27LS-135	Base station
AH315-G	Triquint	BLF6G27LS-40P	Base station
AN26112A	Panasonic	BGU7045	MMIC
AN26120A	Panasonic	BGU7042	MMIC
AN26122A	Panasonic	BGU7045	MMIC
BA592	Infineon	BA591	BS diode
BA595	Infineon	BAP51-03	PIN diode
BA595	Infineon	BAP70-03	PIN diode
BA597	Infineon	BAP70-03	PIN diode
BA885	Infineon	BAP70-03	PIN diode
BA892	Infineon	BA891	BS diode
BA892-02V	Infineon	BA277	PIN diode
BA892-02V	Infineon	BA891	PIN diode
BA892V-02V-GS08	Vishay	BA891	PIN diode
BA895	Infineon	BAP70-02	PIN diode
BAR14-1	Infineon	BAP70-03	PIN diode
BAR15-1	Infineon	BAP70-03	PIN diode
BAR16-1	Infineon	BAP70-03	PIN diode
BAR17	Infineon	BAP50-03	PIN diode
BAR50-02L	Infineon	BAP50LX	PIN diode
BAR50-02V	Infineon	BAP50-02	PIN diode
BAR50-02V	Infineon	BAP50-03	PIN diode
BAR50-02V	Infineon	BAP50-05	PIN diode
BAR50-03W	Infineon	BAP70-02	PIN diode
BAR60	Infineon	BAP50-03	PIN diode
BAR61	Infineon	BAP50-03	PIN diode
BAR63	Infineon	BAP63-03	PIN diode
BAR63-02L	Infineon	BAP63-02	PIN diode
BAR63-02L	Infineon	BAP63LX	PIN diode
BAR63-02V	Infineon	BAP63-02	PIN diode
BAR63-02W	Infineon	BAP63-02	PIN diode
BAR63-03W	Infineon	BAP63-03	PIN diode
BAR63-05	Infineon	BAP63-05W	PIN diode
BAR63-05W	Infineon	BAP63-05W	PIN diode
BAR63V-02V-GS08	Vishay	BAP63-02	PIN diode
BAR63V-05W-GS08	Vishay	BAP63-05W	PIN diode
BAR64-02LRH	Infineon	BAP64LX	PIN diode
BAR64-02V	Infineon	BAP64-02	PIN diode
BAR64-02W	Infineon	BAP64-02	PIN diode
BAR64-03W	Infineon	BAP64-03	PIN diode

Manufacturer type	Manufacturer	NXP type	Product family
BAR64-04	Infineon	BAP64-04	PIN diode
BAR64-04W	Infineon	BAP64-04W	PIN diode
BAR64-05	Infineon	BAP64-05	PIN diode
BAR64-05W	Infineon	BAP64-05W	PIN diode
BAR64-06	Infineon	BAP64-06	PIN diode
BAR64-06W	Infineon	BAP64-06W	PIN diode
BAR64V-02V-GS08	Vishay	BAP64-02	PIN diode
BAR64V-04-GS08	Vishay	BAP64-04	PIN diode
BAR64V-05-GS08	Vishay	BAP64-05	PIN diode
BAR64V-06-GS08	Vishay	BAP64-06	PIN diode
BAR64V-06W-GS08	Vishay	BAP64-06W	PIN diode
BAR65-02L	Infineon	BAP65LX	PIN diode
BAR65-02V	Infineon	BAP65-02	PIN diode
BAR65-02W	Infineon	BAP65-02	PIN diode
BAR65-03W	Infineon	BAP65-03	PIN diode
BAR65V-02V-GS08	Vishay	BAP65-02	PIN diode
BAR66	Infineon	BAP1321-04	PIN diode
BAR67-02W	Infineon	BAP1321-02	PIN diode
BAR67-03W	Infineon	BAP1321-03	PIN diode
BAT18-04	Infineon	BAT18	PIN diode
BB304C	Renesas Electronics	BF1201WR	FET
BB304M	Renesas Electronics	BF1201R	FET
BB305C	Renesas Electronics	BF1201WR	FET
BB305M	Renesas Electronics	BF1201R	FET
BB403M	Renesas Electronics	BF909R	FET
BB501C	Renesas Electronics	BF1202WR	FET
BB501M	Renesas Electronics	BF1202R	FET
BB502C	Renesas Electronics	BF1202WR	FET
BB502M	Renesas Electronics	BF1202R	FET
BB503C	Renesas Electronics	BF1202WR	FET
BB503M	Renesas Electronics	BF1202R	FET
BB535	Infineon	BB149	Varicap
BB545	Infineon	BB149A	Varicap
BB555	Infineon	BB179B	Varicap
BB565	Infineon	BB179	Varicap
BB601M	Renesas Electronics	BF1202	FET
BB639	Infineon	BB148	Varicap
BB639	Infineon	BB153	Varicap
BB640	Infineon	BB152	Varicap
BB641	Infineon	BB152	Varicap
BB659	Infineon	BB178	Varicap
BB664	Infineon	BB178	Varicap
BB664	Infineon	BB187	Varicap
BB669	Infineon	BB152	Varicap
BB814	Infineon	BB201	Varicap
BB831	Infineon	BB131	Varicap
BB833	Infineon	BB131	Varicap
BB835	Infineon	BB131	Varicap
BBY58-02V	Infineon	BB202	Varicap
BBY65	Infineon	BB202	Varicap
BF1005R	Infineon	BF1105R	FET
BF1005S	Infineon	BF1105	FET
BF1005SR	Infineon	BF1105R	FET
BF2030	Infineon	BF1211	FET
BF2030	Infineon	BF1212	FET
BF2030R	Infineon	BF1211R	FET
BF2030R	Infineon	BF1212R	FET
BF2030W	Infineon	BF1211WR	FET
BF2030W	Infineon	BF1212WR	FET
BF2040	Infineon	BF909	FET
BF2040R	Infineon	BF909R	FET
BF2040W	Infineon	BF909WR	FET
BF5020	Infineon	BF1212	FET
BF5020R	Infineon	BF1212R	FET
BF5020W	Infineon	BF1212WR	FET
BF5030W	Infineon	BF909WR	FET
BF770A	Infineon	BFR93A	WB trs 1-4
BF771	Infineon	PBR951	WB trs 1-4
BF771W	Infineon	BFS540	WB trs 1-4
BF772	Infineon	BFG540	WB trs 1-4
BF775	Infineon	BFR92A	WB trs 1-4
BF775A	Infineon	BFR92A	WB trs 1-4
BF775W	Infineon	BFR92AW	WB trs 1-4
BF851A	Standard	BF861A	FET
BF851B	Standard	BF861B	FET
BF851C	Standard	BF861C	FET
BF994S	Vishay	BF994S	FET

Manufacturer type	Manufacturer	NXP type	Product family
BF996S	Vishay	BF996S	FET
BF998	Infineon	BF998	FET
BF998	Vishay	BF998	FET
BF998-GS08	Vishay	BF998	FET
BF998R	Vishay	BF998R	FET
BF998R	Infineon	BF998R	FET
BF998R-GS08	Vishay	BF998R	FET
BF998RW	Vishay	BF998WR	FET
BF998W	Infineon	BF998WR	FET
BFG135A	Infineon	BFG135	WB trs 1-4
BFG193	Infineon	BFG198	WB trs 1-4
BFG194	Infineon	BFG31	WB trs 1-4
BFG196	Infineon	BFG541	WB trs 1-4
BFG19S	Infineon	BFG97	WB trs 1-4
BFG235	Infineon	BFG135	WB trs 1-4
BFP180	Infineon	BFG505/X	WB trs 1-4
BFP181	Infineon	BFG67/X	WB trs 1-4
BFP181T-GS08	Vishay	BFG67/X	WB trs 1-4
BFP182	Infineon	BFG67/X	WB trs 1-4
BFP183	Infineon	BFG520/X	WB trs 1-4
BFP183R	Infineon	BFG520/XR	WB trs 1-4
BFP183T-GS08	Vishay	BFG520/X	WB trs 1-4
BFP183TW-GS08	Vishay	BFG520W/X	WB trs 1-4
BFP193	Infineon	BFG540/X	WB trs 1-4
BFP193W	Infineon	BFG540W/XR	WB trs 1-4
BFP196T-GS08	Vishay	BFG540/X	WB trs 1-4
BFP196TR-GS08	Vishay	BFG540/XR	WB trs 1-4
BFP196TRW-GS08	Vishay	BFG540W/XR	WB trs 1-4
BFP196TW-GS08	Vishay	BFG540W/X	WB trs 1-4
BFP196W	Infineon	BFG540W/XR	WB trs 1-4
BFP280	Infineon	BFG505/X	WB trs 1-4
BFP405	Infineon	BFG410W	WB trs 5-7
BFP420	Infineon	BFG425W	WB trs 5-7
BFP450	Infineon	BFG480W	WB trs 5-7
BFP620	Infineon	BFU660F	WB trs 5-7
BFP640	Infineon	BFU630F, BFU660F	WB trs 5-7
BFP650	Infineon	BFU690F, BFU760F, BFU790F	WB trs 5-7
BFP67-GS08	Vishay	BFG67/X	WB trs 1-4
BFP67R-GS08	Vishay	BFG67/X	WB trs 1-4
BFP720	Infineon	BFU710F, BFU730F	WB trs 5-7
BFP740	Infineon	BFU710F, BFU730F	WB trs 5-7
BFP740	Infineon	BFU725F	WB trs 5-7
BFP740F	Infineon	BFU725F	WB trs 5-7
BFP750	Infineon	BFU690F, BFU760F, BFU790F	WB trs 5-7
BFP81	Infineon	BFG92A/X	WB trs 1-4
BFP92A-GS08	Vishay	BFG92A/X	WB trs 1-4
BFP93A	Infineon	BFG93A/X	WB trs 1-4
BFP93A-GS08	Vishay	BFG93A/X	WB trs 1-4
BFQ193	Infineon	BFQ540	WB trs 1-4
BFQ19S	Infineon	BFQ19	WB trs 1-4
BFQ67-GS08	Vishay	BFQ67W	WB trs 1-4
BFR106	Infineon	BFR106	WB trs 1-4
BFR180	Infineon	BFR505	WB trs 1-4
BFR180W	Infineon	BFS505	WB trs 1-4
BFR181	Infineon	BFR520	WB trs 1-4
BFR181T-GS08	Vishay	BFR520	WB trs 1-4
BFR181TW-GS08	Vishay	BFS520	WB trs 1-4
BFR181W	Infineon	BFS520	WB trs 1-4
BFR182	Infineon	PBR941	WB trs 1-4
BFR182W	Infineon	PRF947	WB trs 1-4
BFR183	Infineon	PBR951	WB trs 1-4
BFR183T-GS08	Vishay	PBR951	WB trs 1-4
BFR183TW-GS08	Vishay	PRF957	WB trs 1-4
BFR183W	Infineon	PRF957	WB trs 1-4
BFR193	Infineon	PBR951	WB trs 1-4
BFR193TW-GS08	Vishay	PRF957	WB trs 1-4
BFR193W	Infineon	PRF957	WB trs 1-4
BFR196T-GS08	Vishay	BFR540	WB trs 1-4
BFR196TW-GS08	Vishay	BFS540	WB trs 1-4
BFR35AP	Infineon	BFR92A	WB trs 1-4
BFR92AL	Freescale	BFR92A	WB trs 1-4
BFR92AW-GS08	Vishay	BFR92AW	WB trs 1-4
BFR92P	Infineon	BFR92A	WB trs 1-4
BFR92W	Infineon	BFR92AW	WB trs 1-4
BFR93A	Infineon	BFR93A	WB trs 1-4

Manufacturer type	Manufacturer	NXP type	Product family
BFR93AL	Freescale	BFR93A	WB trs 1-4
BFR93AW	Infineon	BFR93AW	WB trs 1-4
BFR93AW-GS08	Vishay	BFR93AW	WB trs 1-4
BFR93-GS08	Vishay	BFR93A	WB trs 1-4
BFS17-GS08	Vishay	BFS17	WB trs 1-4
BFS17-GS08	Vishay	BFS17A	WB trs 1-4
BFS17L	Freescale	BFS17	WB trs 1-4
BFS17P	Infineon	BFS17A	WB trs 1-4
BFS17W	Infineon	BFS17W	WB trs 1-4
BFS17W-GS08	Vishay	BFS17W	WB trs 1-4
BFS481	Infineon	BFM505	WB trs 1-4
BFS483	Infineon	BFM520	WB trs 1-4
BFT92	Infineon	BFT92	WB trs 1-4
BFT93	Infineon	BFT93	WB trs 1-4
BG3123	Infineon	BF1203	FET
BG3123R	Infineon	BF1203	FET
BG3130	Infineon	BF1214	FET
BG3130R	Infineon	BF1214	FET
BG3430R	Infineon	BF1207	FET
BG5120K	Infineon	BF1210	FET
BG5130R	Infineon	BF1206	FET
BG5412K	Infineon	BF1208D	FET
BGA428	Infineon	BGU7003	MMIC
BGA461	Infineon	BGU7003	MMIC
BGA615	Infineon	BGU7007	MMIC
BGA715	Infineon	BGU8007	MMIC
BGA915	Infineon	BGU7005	MMIC
BGB707	Infineon	BGU6102	MMIC
BGB717	Infineon	BGU6102	MMIC
BIC701C	Renesas Electronics	BF1105WR	FET
BIC701M	Renesas Electronics	BF1105R	FET
BIC702C	Renesas Electronics	BF1105WR	FET
BIC702M	Renesas Electronics	BF1105R	FET
BIC801M	Renesas Electronics	BF1105	FET
BSR111	Standard	PMBFJ111	FET
BSR112	Standard	PMBFJ112	FET
BSR113	Standard	PMBFJ113	FET
BSR174	Standard	PMBFJ174	FET
BSR175	Standard	PMBFJ175	FET
BSR176	Standard	PMBFJ176	FET
BSR177	Standard	PMBFJ177	FET
CA901	Standard	BGX885N	CATV PPA
CA901A	Standard	BGX885N	CATV PPA
CMM6004-SC	Mimix	BGA7024	MMIC
CMM6004-SC	Mimix	BGA7124	MMIC
CMM6004-SC	Mimix	BGA7124	MMIC
CMM6004-SC	Mimix	BGA7204	MMIC
CMY91	Infineon	BGA2022	MMIC
CMY91	Infineon	BGA2022	WB trs 1-4
CXE1089Z	RFMD	BGA6489	MMIC
CXE1089Z	RFMD	BGA6589	MMIC
D10040180GT	RFMD	CGD1042H	CATV PD
D10040180GTH	RFMD	CGD1042H	CATV PD
D10040200GT	RFMD	CGD1042H	CATV PD
D10040200GTH	RFMD	CGD1042H	CATV PD
D10040200P1	RFMD	CGD1042H	CATV PD
D10040200PH1	RFMD	CGD1042H	CATV PD
D10040220GT	RFMD	CGD1042H	CATV PD
D10040220GTH	RFMD	CGD1042H	CATV PD
D10040230P1	RFMD	CGD1042H	CATV PD
D10040230PH1	RFMD	CGD1042H	CATV PD
D10040240GT	RFMD	CGD1044H	CATV PD
D10040240GTH	RFMD	CGD1044H	CATV PD
D10040250GT	RFMD	CGD1044H	CATV PD
D10040250GTH	RFMD	CGD1044H	CATV PD
D10040270GT	RFMD	CGD1044H	CATV PD
D10040270GTH	RFMD	CGD1044H	CATV PD
D10040270GTL	RFMD	CGD1044H	CATV PD
D8740180GT	RFMD	CGD942C	CATV PD
D8740180GTH	RFMD	CGD942C	CATV PD
D8740220GT	RFMD	CGD942C	CATV PD
D8740220GTH	RFMD	CGD942C	CATV PD
D8740240GT	RFMD	CGD944C	CATV PD
D8740240GTH	RFMD	CGD944C	CATV PD
D8740250GT	RFMD	CGD944C	CATV PD
D8740250GTH	RFMD	CGD944C	CATV PD
D8740270GT	RFMD	CGD944C	CATV PD

Manufacturer type	Manufacturer	NXP type	Product family
D8740270GTH	RFMD	CGD944C	CATV PD
D8740320GT	RFMD	CGD888C	CATV PD
D8740320GTH	RFMD	CGD888C	CATV PD
EC2C03C	Sanyo	BB145B	Varicap
FSD273TA	Skyworks	BB148	Varicap
FSD273TA	Skyworks	BB178	Varicap
HBFP0405	Agilent	BFG410W	WB trs 5-7
HBFP0420	Agilent	BFG425W	WB trs 5-7
HBFP0450	Agilent	BFG480W	WB trs 5-7
HMC454ST89E	Hittite	BGA7027	MMIC
HMC454ST89E	Hittite	BGA7127	MMIC
HMC454ST89E	Hittite	BGA7127	MMIC
HMC617LP3	Hittite	BGU7051	MMIC
HMC618LP3	Hittite	BGU7052	MMIC
HMC625	Hittite	BGA7204	MMIC
HMC667LP2	Hittite	BGU7053	MMIC
HSC277	Renesas Electronics	BA277	BS diode
HSMP3800	Agilent	BAP70-03	PIN diode
HSMP3802	Agilent	BAP50-04	PIN diode
HSMP3804	Agilent	BAP50-05	PIN diode
HSMP3810	Agilent	BAP50-03	PIN diode
HSMP3814	Agilent	BAP50-05	PIN diode
HSMP381B	Agilent	BAP50-03	PIN diode
HSMP381C	Agilent	BAP50-05	PIN diode
HSMP381F	Agilent	BAP64-05W	PIN diode
HSMP3820	Agilent	BAP1321-03	PIN diode
HSMP3822	Agilent	BAP1321-04	PIN diode
HSMP3830	Agilent	BAP64-03	PIN diode
HSMP3832	Agilent	BAP64-04	PIN diode
HSMP3833	Agilent	BAP64-06	PIN diode
HSMP3834	Agilent	BAP64-05	PIN diode
HSMP3860	Agilent	BAP50-03	PIN diode
HSMP3862	Agilent	BAP50-04	PIN diode
HSMP3864	Agilent	BAP50-05	PIN diode
HSMP386B	Agilent	BAP50-02	PIN diode
HSMP386E	Agilent	BAP50-04W	PIN diode
HSMP386L	Agilent	BAP50-05W	PIN diode
HSMP3880	Agilent	BAP51-03	PIN diode
HSMP3890	Agilent	BAP51-03	PIN diode
HSMP3892	Agilent	BAP64-04	PIN diode
HSMP3894	Agilent	BAP64-05	PIN diode
HSMP3895	Agilent	BAP51-02	PIN diode
HSMP389B	Agilent	BAP51-02	PIN diode
HSMP389C	Agilent	BAP64-04	PIN diode
HSMP389F	Agilent	BAP51-05W	PIN diode
HVB14S	Renesas Electronics	BAP50-04W	PIN diode
HVC131	Renesas Electronics	BAP65-02	PIN diode
HVC132	Renesas Electronics	BAP51-02	PIN diode
HVC200A	Renesas Electronics	BB178	Varicap
HVC200A	Renesas Electronics	BB187	Varicap
HVC202A	Renesas Electronics	BB179	Varicap
HVC202B	Renesas Electronics	BB179B	Varicap
HVC300A	Renesas Electronics	BB182	Varicap
HVC300B	Renesas Electronics	BB182	Varicap
HVC306A	Renesas Electronics	BB187	Varicap
HVC306B	Renesas Electronics	BB187	Varicap
HVC355B	Renesas Electronics	BB145B	Varicap
HVC359	Renesas Electronics	BB202	Varicap
HVC363A	Renesas Electronics	BB178	Varicap
HVC376B	Renesas Electronics	BB198	Varicap
HVC376B	Renesas Electronics	BB202	Varicap
HVD132	Renesas Electronics	BAP51-02	PIN diode
HVU131	Renesas Electronics	BAP65-03	PIN diode
HVU132	Renesas Electronics	BAP51-03	PIN diode
HVU202(A)	Renesas Electronics	BB149	Varicap
HVU202(A)	Renesas Electronics	BB149A	Varicap
HVU300A	Renesas Electronics	BB152	Varicap
HVU307	Renesas Electronics	BB148	Varicap
HVU315	Renesas Electronics	BB148	Varicap
HVU316	Renesas Electronics	BB131	Varicap
HVU363A	Renesas Electronics	BB148	Varicap
HVU363A	Renesas Electronics	BB153	Varicap
HVU363B	Renesas Electronics	BB148	Varicap
IB0912L200	Integra	BLA1011-200R	A&D
IB0912L30	Integra	BLA1011-2	A&D
IB0912L70	Integra	BLA1011-200	A&D
IB0912M210	Integra	BLA0912-250	A&D

Manufacturer type	Manufacturer	NXP type	Product family
IB0912M350	Integra	BLA0912-250R	A&D
IB0912M500	Integra	BLA6H0912-500	A&D
IB0912M600	Integra	BLA1011-10	A&D
IB0912M70	Integra	BLL6H0514LS-130	A&D
IB1011S1000	Integra	BLA6G1011LS-200RG	A&D
IB1011S1500	Integra	BLA6H1011-600	A&D
IB1011S190	Integra	BLA1011S-200	A&D
IB1011S250	Integra	BLA1011S-200R	A&D
IB1011S350	Integra	BLA6G1011-200R	A&D
IB1011S70	Integra	BLA1011-300	A&D
IB1214M130	Integra	BLL6H1214-500	A&D
IB1214M150	Integra	BLL6G1214L-250	A&D
IB1214M300	Integra	BLL6G1214LS-250	A&D
IB1214M32	Integra	BLL1214-250R	A&D
IB1214M375	Integra	BLL6H1214L-250	A&D
IB1214M55	Integra	BLL1214-35	A&D
IB1214M6	Integra	BLL1214-250	A&D
IB2729M25	Integra	BLS7G2729LS-350P	A&D
IB2729M5	Integra	BLS7G2729L-350P	A&D
IB2731M110	Integra	BLS6G2731-6G	A&D
IB2731MH110	Integra	BLS6G2731S-130	A&D
IB2731MH25	Integra	BLS6G2731S-120	A&D
IB2931MH155	Integra	BLS6G2933S-130	A&D
IB2931MH55	Integra	BLS2933-100	A&D
IB2934M100	Integra	BLS7G2933S-150	A&D
IB3135MH100	Integra	BLS7G3135LS-350P	A&D
IB3135MH20	Integra	BLS6G3135-20	A&D
IB3135MH45	Integra	BLS6G3135S-120	A&D
IB3135MH5	Integra	BLS6G3135-120	A&D
IB3135MH65	Integra	BLS6G3135S-20	A&D
IB3135MH75	Integra	BLS7G3135L-350P	A&D
IB450S300	Integra	BLF578XR	Broadcast
IB450S500	Integra	BLF544	Broadcast
IDM165L650	Integra	BLF1043	Broadcast
IDM175CW300	Integra	BLF369	Broadcast
IDM265L650	Integra	BLF1046	Broadcast
IDM30512CW100	Integra	BLF574XRS	Broadcast
IDM30512CW20	Integra	BLF574	Broadcast
IDM30512CW50	Integra	BLF574XR	Broadcast
IDM500CW120	Integra	BLF572XR	Broadcast
IDM500CW150	Integra	BLF572XRS	Broadcast
IDM500CW200	Integra	BLF573	Broadcast
IDM500CW300	Integra	BLF573S	Broadcast
IDM500CW80	Integra	BLF571	Broadcast
ILD0506EL350	Integra	BLF988	Broadcast
ILD0912M150HV	Integra	BLL6H0514-25	A&D
ILD0912M15HV	Integra	BLU6H0410LS-600P	A&D
ILD0912M400HV	Integra	BLL6H0514L-130	A&D
ILD0912M60	Integra	BLU6H0410L-600P	A&D
ILD1214M10	Integra	BLL6H1214LS-250	A&D
ILD1214M60	Integra	BLL6H1214LS-500	A&D
ILD2731M140	Integra	BLS6G2731-120	A&D
ILD2735M120	Integra	BLS6G2735L-30	A&D
ILD2933M130	Integra	BLS6G2735LS-30	A&D
INA-51063	Agilent	BGA2001	MMIC
JDP2S01E	Toshiba	BAP65-02	PIN diode
JDP2S01U	Toshiba	BAP65-03	PIN diode
JDP2S02AFS	Toshiba	BAP51-02	PIN diode
JDP2S02AS	Toshiba	BAP51-03	PIN diode
JDP2S02T	Toshiba	BAP63-02	PIN diode
JDP2S04E	Toshiba	BAP50-02	PIN diode
JDS2S03S	Toshiba	BA891	BS diode
KP2310R	Toko	BAP64-04W	PIN diode
KTK920*	KEC	BF1108	FET
KTK920BT	KEC	BF1108	FET
KTK920T	KEC	BF1108R	FET
KV1835E	Toko	BB199	Varicap
LTC5590	Linear Technology	BGX7220	MMIC
LTC5591	Linear Technology	BGX7221	MMIC
LTC5592	Linear Technology	BGX7221	MMIC
MA2S077	Standard	BA277	BS diode
MA2S357	Panasonic	BB178	Varicap
MA2S357	Panasonic	BB187	Varicap
MA2S372	Panasonic	BB179	Varicap
MA2S374	Panasonic	BB182	Varicap
MA2SV01	Renesas Electronics	BB202	Varicap
MA357	Panasonic	BB153	Varicap

Manufacturer type	Manufacturer	NXP type	Product family
MA366	Panasonic	BB148	Varicap
MA368	Panasonic	BB131	Varicap
MA372	Panasonic	BB149	Varicap
MA372	Panasonic	BB149A	Varicap
MA4CP101A	Panasonic	BAP65-03	PIN diode
MA4P274-1141	Panasonic	BAP51-03	PIN diode
MA4P275-1141	Panasonic	BAP65-03	PIN diode
MA4P275CK-287	Panasonic	BAP65-05	PIN diode
MA4P277-1141	Panasonic	BAP70-03	PIN diode
MA4P278-287	Panasonic	BAP70-03	PIN diode
MA4P789-1141	Panasonic	BAP1321-03	PIN diode
MA4P789ST-287	Panasonic	BAP1321-04	PIN diode
MAX19985A	MAXIM	BGX7220	MMIC
MAX19995	MAXIM	BGX7221	MMIC
MAX2634	Maxim	BGU6102	MMIC
MAX2657	Maxim	BGU8007	MMIC
MAX2658	Maxim	BGU7005	MMIC
MAX2659	Maxim	BGU7005	MMIC
MAX2667	Maxim	BGU8007	MMIC
MAX2687	Maxim	BGU7005	MMIC
MAX2694	Maxim	BGU7005	MMIC
MC7712	Renesas Electronics	BGY785A	CATV PPA
MC7716	Renesas Electronics	BGY787	CATV PPA
MC7722	Renesas Electronics	BGY785A	CATV PPA
MC7726	Renesas Electronics	BGY787	CATV PPA
MC-7831	Renesas Electronics	BGY885A	CATV PP
MC7831-HA	Renesas Electronics	BGY1085A	CATV PP
MC-7831-HA	Renesas Electronics	BGY1085A	CATV PP
MC-7832	Renesas Electronics	BGY887	CATV PP
MC7832-HA	Renesas Electronics	CGY1041	CATV PP
MC-7832-HA	Renesas Electronics	CGY1041	CATV PP
MC-7833	Renesas Electronics	BGY887B	CATV PP
MC-7836	Renesas Electronics	BGY887B	CATV PP
MC-7836	Renesas Electronics	CGY1047	CATV PP
MC-7846	Renesas Electronics	CGD942C	CATV PD
MC-7847	Renesas Electronics	CGD944C	CATV PD
MC7852	Renesas Electronics	BGY885A	CATV PPA
MC7866	Renesas Electronics	BGD816L	CATV PD
MC-7882	Renesas Electronics	BGD814	CATV PD
MC-7883	Renesas Electronics	CGD942C	CATV PD
MC-7884	Renesas Electronics	CGD944C	CATV PD
MC-7891	Renesas Electronics	CGD1042H	CATV PD
MC7893	Renesas Electronics	CGD1042Hi	CATV PD
MC7893	Renesas Electronics	CGD982HCi	CATV PD
MC-7893	Renesas Electronics	CGD1042H	CATV PD
MC7894	Renesas Electronics	CGD1044Hi	CATV PD
MC7894	Renesas Electronics	CGD985HCi	CATV PD
MC-7894	Renesas Electronics	CDG1044H	CATV PD
MC7896	Renesas Electronics	CGD1046Hi	CATV PD
MC7896	Renesas Electronics	CGD987HCi	CATV PD
MC-7896	Renesas Electronics	CGD1044H	CATV PD
MCH4009	Sanyo	BFG424F	WB trs 5-7
MD7IC18120GNR1	Freescale	BLF6G20-180RN	Base station
MD7IC18120NR1	Freescale	BLF6G20-230PRN	Base station
MD7IC2050GNR1	Freescale	BLF7G20LS-200	Base station
MD7IC21100GNR1	Freescale	BLF6G22-45	Base station
MD7IC21100NBR1	Freescale	BLF6G22L-40BN	Base station
MD7IC21100NR1	Freescale	BLF6G22LS-40BN	Base station
MD7IC2250GNR1	Freescale	BLF6G22LS-100	Base station
MD7IC2250NBR1	Freescale	BLF6G22LS-130	Base station
MD7IC2250NR1	Freescale	BLF6G22LS-180PN	Base station
MD7IC2755GNR1	Freescale	BLF6G27-100	Base station
MD7IC2755NR1	Freescale	BLF6G27-135	Base station
MD8IC970GNR1	Freescale	BLF8G10LS-400PGV	Base station
MD8IC970NR1	Freescale	BLF8G10L-300P	Base station
MDS60L	Microsemi	BLA1011S-200R	A&D
MGA631P8	Avago	BGU7051	MMIC
MGA632P8	Avago	BGU7052	MMIC
MGA632P8	Avago	BGU7053	MMIC
MHVIC915NR2	Freescale	BLF6G10LS-135RN	Base station
MHW10186N	Freescale	BGY1085A	CATV PP
MHW10236N	Freescale	CGY1043	CATV PP
MHW10247AN	Freescale	CGD1044H	CATV PD
MHW10276N	Freescale	CGY1047	CATV PP
MHW1224	Freescale	BGY67	CATV RA
MHW1244	Freescale	BGY67A	CATV RA
MHW1253LA	Freescale	BGY67A	CATV RA

Manufacturer type	Manufacturer	NXP type	Product family
MHW1254L	Freescale	BGY68	CATV RA
MHW1254LA	Freescale	BGY68	CATV RA
MHW1304L	Freescale	BGY68	CATV RA
MHW1304LA	Freescale	BGY68	CATV RA
MHW1304LAN	Freescale	BGY68	CATV RA
MHW1346	Freescale	BGY67A	CATV RA
MHW1353LA	Freescale	BGY67A	CATV RA
MHW1354LA	Freescale	BGY68	CATV RA
MHW7182B	Freescale	BGY785A	CATV PPA
MHW7182C	Freescale	BGY785A	CATV PPA
MHW7185C2	Freescale	BGD712	CATV PD
MHW7185CL	Freescale	BGD712	CATV PD
MHW7205C	Freescale	BGD714	CATV PD
MHW7205CL	Freescale	BGD714	CATV PD
MHW7205CLN	Freescale	BGD714	CATV PD
MHW7222	Freescale	BGY787	CATV PPA
MHW7222A	Freescale	BGY787	CATV PPA
MHW7222B	Freescale	BGY787	CATV PPA
MHW7242A	Freescale	BGE787B	CATV PPA/HG
MHW7272A	Freescale	BGE787B	CATV PPA/HG
MHW7292	Freescale	BGE787B	CATV PPA/HG
MHW7292A	Freescale	BGE787B	CATV PPA/HG
MHW7292AN	Freescale	BGE787B	CATV PPA/HG
MHW8182B	Freescale	BGY885A	CATV PPA
MHW8182C	Freescale	BGY885A	CATV PPA
MHW8182CN	Freescale	BGY885A	CATV PP
MHW8185	Freescale	BGD814	CATV PD
MHW8185L	Freescale	BGD812	CATV PD
MHW8188AN	Freescale	CGD942C	CATV PD
MHW8205	Freescale	BGD814	CATV PD
MHW820L	Freescale	BGD814	CATV PD
MHW8222BN	Freescale	BGY887	CATV PP
MHW8227A	Freescale	CGD942C	CATV PD
MHW8227AN	Freescale	CGD942C	CATV PD
MHW8247A	Freescale	CGD944C	CATV PPA
MHW8247AN	Freescale	CGD944C	CATV PD
MHW8292	Freescale	BGY887B	CATV PPA
MHW8342	Freescale	BGY888	CATV PPA
MHW8342N	Freescale	CGY888C	CATV PP
MHW9182B	Freescale	BGY1085A	CATV PPA
MHW9182C	Freescale	BGY1085A	CATV PPA
MHW9182CN	Freescale	BGY1085A	CATV PP
MHW9186	Freescale	BGY885A	CATV PPA
MHW9186A	Freescale	BGY885A	CATV PPA
MHW9187N	Freescale	CGD942C	CATV PD
MHW9188AN	Freescale	CGD942C	CATV PD
MHW9188N	Freescale	CGD942C	CATV PD
MHW9227AN	Freescale	CGD942C	CATV PD
MHW9242A	Freescale	CGD1042	CATV PD
MHW9247	Freescale	CGD944C	CATV PD
MHW9247A	Freescale	CGD944C	CATV PD
MHW9247AN	Freescale	CGD944C	CATV PD
MHW9247N	Freescale	CGD944C	CATV PD
MHWJ7185A	Freescale	BGD712	CATV PD
MHWJ7205A	Freescale	BGD714	CATV PD
MHWJ7292	Freescale	BGE787B	CATV PPA/HG
MHWJ9182	Freescale	BGY1085A	CATV PPA
MMBF4391	Freescale	PMBF4391	FET
MMBF4392	Freescale	PMBF4392	FET
MMBF4393	Freescale	PMBF4393	FET
MMBF4860	Freescale	PMBFJ112	FET
MMBF5484	Freescale	BFR31	FET
MMBFJ113	Freescale	PMBFJ113	FET
MMBFJ174	Freescale	PMBFJ174	FET
MMBFJ175	Freescale	PMBFJ175	FET
MMBFJ176	Freescale	PMBFJ176	FET
MMBFJ177	Freescale	PMBFJ177	FET
MMBFJ308	Freescale	PMBFJ308	FET
MMBFJ309	Freescale	PMBFJ309	FET
MMBFJ310	Freescale	PMBFJ310	FET
MMBFU310	Freescale	PMBFJ310	FET
MMBR5031L	Freescale	BFS17	WB trs 1-4
MMBR5179L	Freescale	BFS17A	WB trs 1-4
MMBR571L	Freescale	PBR951	WB trs 1-4
MMBR901L	Freescale	BFR92A	WB trs 1-4
MMBR911L	Freescale	BFR93A	WB trs 1-4
MMBR920L	Freescale	BFR93A	WB trs 1-4

Manufacturer type	Manufacturer	NXP type	Product family
MMBR931L	Freescale	BFT25A	WB trs 1-4
MMBR941BL	Freescale	PBR941	WB trs 1-4
MMBR941L	Freescale	PBR941	WB trs 1-4
MMBR951AL	Freescale	PBR951	WB trs 1-4
MMBR951L	Freescale	PBR951	WB trs 1-4
MMBV105GLT1	ONSemicond.	BB156	Varicap
MMBV109LT1	ONSemicond.	BB148	Varicap
MMG2001NT1	Freescale	BGD816L	CATV PD
MMG2001T1	Freescale	BGD816L	CATV PD
MMG3004NT1	Freescale	BGA7027	MMIC
MMG3004NT1	Freescale	BGA7127	MMIC
MMG3004NT1	Freescale	BGA7127	MMIC
MMG3014	Freescale	BGA7024	MMIC
MMG3014	Freescale	BGA7124	MMIC
MMG3014	Freescale	BGA7124	MMIC
MMG3014	Freescale	BGA7204	MMIC
MRF282ZR1	Freescale	BLF7G20LS-250P	Base station
MRF577	Freescale	PRF957	WB trs 1-4
MRF5811L	Freescale	BFG93A/X	WB trs 1-4
MRF5P21045NR1	Freescale	BLF6G22LS-180RN	Base station
MRF5S9100NBR1	Freescale	BLF6G10-135RN	Base station
MRF5S9101NBR1	Freescale	BLF6G10LS-200RN	Base station
MRF5S9150HR3	Freescale	BLF6G10-160RN	Base station
MRF5S9150HSR3	Freescale	BLF6G10-200RN	Base station
MRF6P24190HR6	Freescale	BLF6G27-10G	Base station
MRF6P24190HR6	Freescale	BLF7G24LS-160P	Base station
MRF6P27160HR5	Freescale	BLF7G27L-150P	Base station
MRF6P27160HR5	Freescale	BLF8G27LS-140	Base station
MRF6P27160HR6	Freescale	BLF7G27L-90P	Base station
MRF6P27160HR6	Freescale	BLF8G27LS-140G	Base station
MRF6S18060NR1	Freescale	BLF6G20-110	Base station
MRF6S18060NR1	Freescale	BLF6G20-180PN	Base station
MRF6S20010GNR1	Freescale	BLF6G22LS-75	Base station
MRF6S20010NR1	Freescale	BLF6G22S-45	Base station
MRF6S21050LR3	Freescale	BLF7G22L-130	Base station
MRF6S21050LSR3	Freescale	BLF7G22L-160	Base station
MRF6S21100HR3	Freescale	BLF7G22LS-130	Base station
MRF6S21140HR3	Freescale	BLF7G22LS-160	Base station
MRF6S21190HSR3	Freescale	BLF8G22LS-200GV	Base station
MRF6S24140HR3	Freescale	BLF7G24L-100	Base station
MRF6S24140HR3	Freescale	BLF7G27L-75P	Base station
MRF6S24140HSR3	Freescale	BLF7G24L-140	Base station
MRF6S24140HSR3	Freescale	BLF7G27LS-75P	Base station
MRF6S27015GNR1	Freescale	BLF7G22LS-250P	Base station
MRF6S27015NR1	Freescale	BLF6G27-10	Base station
MRF6S27085HR3	Freescale	BLF7G27LS-100	Base station
MRF6S27085HR3	Freescale	BLF8G27LS-200GV	Base station
MRF6S27085HR5	Freescale	BLF8G27LS-200PGV	Base station
MRF6S27085HSR3	Freescale	BLF8G27LS-280PGV	Base station
MRF6S27085HSR5	Freescale	BLF7G27L-135	Base station
MRF6V10010NR4	Freescale	BLA1011-200R	A&D
MRF6V12250HR3	Freescale	BLA0912-250	A&D
MRF6V12250HR5	Freescale	BLA0912-250R	A&D
MRF6V12250HSR3	Freescale	BLA6H0912-500	A&D
MRF6V12500HR5	Freescale	BLA1011-10	A&D
MRF6V12500HSR3	Freescale	BLA1011-2	A&D
MRF6V12500HSR5	Freescale	BLA1011-200	A&D
MRF6V13250HR3	Freescale	BLF6G15L-500H	Base station
MRF6V13250HR3	Freescale	BLF6G15LS-250PBRN	Base station
MRF6V13250HR3	Freescale	BLL6G1214LS-250	A&D
MRF6V13250HR3	Freescale	BLL6H1214LS-500	A&D
MRF6V13250HR5	Freescale	BLF6G15LS-500H	Base station
MRF6V13250HR5	Freescale	BLF6G15LS-40RN	Base station
MRF6V13250HR5	Freescale	BLL6H1214-500	A&D
MRF6V13250HSR3	Freescale	BLF6G13L-250P	Base station
MRF6V13250HSR3	Freescale	BLF7G20L-90P	Base station
MRF6V13250HSR3	Freescale	BLL6H1214L-250	A&D
MRF6V13250HSR5	Freescale	BLF6G13LS-250P	Base station
MRF6V13250HSR5	Freescale	BLF7G20LS-90P	Base station
MRF6V13250HSR5	Freescale	BLL6H1214LS-250	A&D
MRF6V14300HR3	Freescale	BLL1214-250	A&D
MRF6V14300HR5	Freescale	BLL1214-250R	A&D
MRF6V14300HSR3	Freescale	BLF7G15LS-200	Base station
MRF6V14300HSR3	Freescale	BLL1214-35	A&D
MRF6V14300HSR5	Freescale	BLF7G15LS-300P	Base station
MRF6V14300HSR5	Freescale	BLL6G1214L-250	A&D
MRF6V2010NBR1	Freescale	BLF573S	Broadcast

Manufacturer type	Manufacturer	NXP type	Product family
MRF6V2010NBR5	Freescale	BLF574	Broadcast
MRF6V2010NR1	Freescale	BLF574XR	Broadcast
MRF6V2150NBR1	Freescale	BLF574XRS	Broadcast
MRF6V2150NBR5	Freescale	BLF578	Broadcast
MRF6V2150NR1	Freescale	BLF578XR	Broadcast
MRF6V3090NBR1	Freescale	BLF647PS	Broadcast
MRF6V3090NBR5	Freescale	BLF202	Broadcast
MRF6V3090NR1	Freescale	BLF242	Broadcast
MRF6V3090NR5	Freescale	BLF244	Broadcast
MRF6VP11KHR5	Freescale	BLF145	Broadcast
MRF6VP11KHR6	Freescale	BLF147	Broadcast
MRF6VP21KHR5	Freescale	BLF175	Broadcast
MRF6VP21KHR6	Freescale	BLF177	Broadcast
MRF6VP2600HR5	Freescale	BLF647P	Broadcast
MRF6VP3091NBR1	Freescale	BLF245	Broadcast
MRF6VP3091NBR5	Freescale	BLF245B	Broadcast
MRF6VP3091NR1	Freescale	BLF246	Broadcast
MRF6VP3091NR5	Freescale	BLF878	Broadcast
MRF6VP3450HR5	Freescale	BLF879P	Broadcast
MRF6VP3450HR6	Freescale	BLF884P	Broadcast
MRF6VP3450HSR5	Freescale	BLF884PS	Broadcast
MRF6VP3450HSR6	Freescale	BLF888	Broadcast
MRF6VP41KHR5	Freescale	BLF248	Broadcast
MRF6VP41KHR6	Freescale	BLF369	Broadcast
MRF6VP41KHR7	Freescale	BLF571	Broadcast
MRF6VP41KHSR5	Freescale	BLF572XR	Broadcast
MRF6VP41KHSR6	Freescale	BLF572XRS	Broadcast
MRF6VP41KHSR7	Freescale	BLF573	Broadcast
MRF7P20040HR3	Freescale	BLF6G22-180PN	Base station
MRF7P20040HSR3	Freescale	BLF6G22-180RN	Base station
MRF7S15100HR3	Freescale	BLF6G15L-250PBRN	Base station
MRF7S15100HSR3	Freescale	BLF6G15L-40BRN	Base station
MRF7S15100HSR5	Freescale	BLF6G15L-40RN	Base station
MRF7S18170HSR3	Freescale	BLF6G20-40	Base station
MRF7S21080HSR3	Freescale	BLF8G22LS-270GV	Base station
MRF7S21110HR3	Freescale	BLF8G22LS-400PGV	Base station
MRF7S21110HSR3	Freescale	BLM7G22S-60PB	Base station
MRF7S27130HR3	Freescale	BLF6G27-45	Base station
MRF7S27130HSR3	Freescale	BLF6G27-75	Base station
MRF7S35015HSR3	Freescale	BLS6G3135S-20	A&D
MRF7S35120HSR3	Freescale	BLS7G3135L-350P	A&D
MRF7S38075HR3	Freescale	BLF6G38-10	Base station
MRF8P18265HR5	Freescale	BLF6G20-45	Base station
MRF8P18265HR6	Freescale	BLF6G20-75	Base station
MRF8P18265HSR5	Freescale	BLF6G20LS-110	Base station
MRF8P18265HSR6	Freescale	BLF6G20LS-140	Base station
MRF8P20160HR3	Freescale	BLF8G20LS-270GV	Base station
MRF8P20160HR5	Freescale	BLF8G20LS-270PGV	Base station
MRF8P20160HSR3	Freescale	BLF7G20L-200	Base station
MRF8P20160HSR5	Freescale	BLF7G20L-250P	Base station
MRF8P20161HSR3	Freescale	BLF8G20L-200V	Base station
MRF8P20161HSR5	Freescale	BLF8G20LS-200V	Base station
MRF8P23080HR3	Freescale	BLM7G22S-60PBG	Base station
MRF8P23080HR5	Freescale	BLD6G21L-50	Base station
MRF8P23080HSR3	Freescale	BLD6G21LS-50	Base station
MRF8P23080HSR5	Freescale	BLM6G22-30	Base station
MRF8P23160WHR3	Freescale	BLM6G22-30G	Base station
MRF8P23160WHR5	Freescale	BLD6G22L-50	Base station
MRF8P23160WHSR3	Freescale	BLD6G22LS-50	Base station
MRF8P23160WHSR5	Freescale	BLF6G22L-40P	Base station
MRF8P26080HR3	Freescale	BLF6G27L-40P	Base station
MRF8P26080HR5	Freescale	BLF6G27L-50BN	Base station
MRF8P26080HSR3	Freescale	BLF6G27LS-100	Base station
MRF8P26080HSR5	Freescale	BLF6G27LS-135	Base station
MRF8P29300HR5	Freescale	BLF7G27LS-140	Base station
MRF8P29300HR5	Freescale	BLS6G2731-120	A&D
MRF8P29300HR6	Freescale	BLF7G27LS-150P	Base station
MRF8P29300HR6	Freescale	BLS6G2731-6G	A&D
MRF8P29300HSR5	Freescale	BLF7G27LS-90P	Base station
MRF8P29300HSR5	Freescale	BLS6G2731S-120	A&D
MRF8P29300HSR6	Freescale	BLF7G27LS-90PG	Base station
MRF8P29300HSR6	Freescale	BLS6G2731S-130	A&D
MRF8P8300HR5	Freescale	BLF6G10LS-160RN	Base station
MRF8P8300HR6	Freescale	BLF6G10LS-260PRN	Base station
MRF8P8300HSR5	Freescale	BLF6G10S-45	Base station
MRF8P8300HSR6	Freescale	BLF6H10L-160	Base station
MRF8P9040GNR1	Freescale	BLF6G10-45	Base station

Manufacturer type	Manufacturer	NXP type	Product family
MRF8P9040NBR1	Freescale	BLF6G10L-260PBM	Base station
MRF8P9040NR1	Freescale	BLF6G10L-260PRN	Base station
MRF8S18120HR3	Freescale	BLF6G20LS-180RN	Base station
MRF8S18120HR5	Freescale	BLF6G20LS-75	Base station
MRF8S18120HSR3	Freescale	BLF6G20S-230PRN	Base station
MRF8S18120HSR5	Freescale	BLF6G20S-45	Base station
MRF8S18260HR5	Freescale	BLF7G20LS-140P	Base station
MRF8S18260HR6	Freescale	BLF7G20LS-260A	Base station
MRF8S18260HSR5	Freescale	BLF7G21L-160P	Base station
MRF8S18260HSR6	Freescale	BLF7G21LS-160	Base station
MRF8S23120HR3	Freescale	BLF6G22LS-40P	Base station
MRF8S23120HR5	Freescale	BLF7G22L-200	Base station
MRF8S23120HSR3	Freescale	BLF7G22L-250P	Base station
MRF8S23120HSR5	Freescale	BLF7G22LS-200	Base station
MRF8S26060HR3	Freescale	BLF7G27L-200PB	Base station
MRF8S26060HSR5	Freescale	BLF8G27LS-140V	Base station
MRF8S8260HR3	Freescale	BLF8G10L-160V	Base station
MRF8S8260HR5	Freescale	BLF8G10LS-160V	Base station
MRF8S8260HSR3	Freescale	BLF8G10LS-200GV	Base station
MRF8S8260HSR5	Freescale	BLF8G10LS-270GV	Base station
MRF917	Freescale	BFQ67W	WB trs 1-4
MRF927	Freescale	BFS25A	WB trs 1-4
MRF9411L	Freescale	BFG520/X	WB trs 1-4
MRF947	Freescale	BFS520	WB trs 1-4
MRF947A	Freescale	PRF947	WB trs 1-4
MRF9511L	Freescale	BFG540/X	WB trs 1-4
MRF957	Freescale	PRF957	WB trs 1-4
MRFE6P3300HR3	Freescale	BLF888A	Broadcast
MRFE6P3300HR5	Freescale	BLF578XRS	Broadcast
MRFE6P9220HR3	Freescale	BLF7G10LS-250	Base station
MRFE6S8046GNR1	Freescale	BLF8G10LS-300P	Base station
MRFE6S8046NR1	Freescale	BLF7G10L-250	Base station
MRFE6S9125NBR1	Freescale	BLF6H10LS-160	Base station
MRFE6S9125NR1	Freescale	BLF8G10L-160	Base station
MRFE6S9160HSR3	Freescale	BLM6G10-30	Base station
MRFE6S9205HSR3	Freescale	BLM6G10-30G	Base station
MRFE6VP8600HR5	Freescale	BLF888AS	Broadcast
MRFE6VP8600HR6	Freescale	BLF888B	Broadcast
MRFE6VP8600HSR5	Freescale	BLF888BS	Broadcast
MRFG35003ANT1	Freescale	BLU6H0410L-600P	A&D
MS1078	Microsemi	BLF145	Broadcast
MS1281	Microsemi	BLF177	Broadcast
MS1336	Microsemi	BLF175	Broadcast
MS1337	Microsemi	BLF147	Broadcast
MS1504	Microsemi	BLF248	Broadcast
MS1505	Microsemi	BLF178XRS	Broadcast
MS1506	Microsemi	BLF178XR	Broadcast
MS2267	Microsemi	BLA1011-10	A&D
MS2272	Microsemi	BLA6H0912-500	A&D
MT4S200T	Toshiba	BFG424W	WB trs 5-7
MT4S200U	Toshiba	BFG425W	WB trs 5-7
MT4S34U	Toshiba	BFG410W	WB trs 5-7
MV2109G	ONSemicond.	BB182LX	Varicap
MW6S004NT1	Freescale	BLF6G21-10G	Base station
MW6S004NT1	Freescale	BLF1043	Broadcast
MW7IC008NT1	Freescale	BLF988	Broadcast
MW7IC2020NT1	Freescale	BLF7G21LS-160P	Base station
MW7IC2425GNR1	Freescale	BLF7G24L-160P	Base station
MW7IC2425GNR1	Freescale	BLF8G24L-200P	Base station
MW7IC2425NBR1	Freescale	BLF7G24LS-100	Base station
MW7IC2425NBR1	Freescale	BLF8G24LS-200P	Base station
MW7IC2425NR1	Freescale	BLF7G24LS-140	Base station
MW7IC2425NR1	Freescale	BLS7G2325L-105	Base station
MW7IC2725GNR1	Freescale	BLF6G27LS-40P	Base station
MW7IC2725NBR1	Freescale	BLF6G27LS-50BN	Base station
MW7IC2725NR1	Freescale	BLF6G27LS-75	Base station
MW7IC2750GNR1	Freescale	BLF6G27S-45	Base station
MW7IC2750NBR1	Freescale	BLF7G27L-100	Base station
MW7IC2750NR1	Freescale	BLF7G27L-140	Base station
MW7IC3825GNR1	Freescale	BLF6G38-100	Base station
MW7IC3825NBR1	Freescale	BLF6G38-10G	Base station
MW7IC3825NR1	Freescale	BLF6G38-25	Base station
MW7IC915NT1	Freescale	BLF6G10L-40BRN	Base station
MWE6IC9100NBR1	Freescale	BLF8G10LS-160	Base station
NESG2021M05	Renesas Electronics	BFU610F	WB trs 5-7
NESG2031M05	Renesas Electronics	BFU630F	WB trs 5-7
NESG2101M05	Renesas Electronics	BFU660F	WB trs 5-7

Manufacturer type	Manufacturer	NXP type	Product family
NESG2101M05	Renesas Electronics	BFU760F	WB trs 5-7
NESG2101M05	Renesas Electronics	BFU790F	WB trs 5-7
NESG3031M05	Renesas Electronics	BFU730F	WB trs 5-7
NESG3032M14	Renesas Electronics	BFU725F	WB trs 5-7
NJG1140KA1	JRC	BGU7044	MMIC
PRF947B	Motorola	PRF947	WB trs 1-4
PRF947B	Infineon	PRF947	WB trs 1-4
PTF 080101S - 10 W	Infineon	BLF8G10L-300P	Base station
PTF 081301E	Infineon	BLF8G10LS-300P	Base station
PTF 081301F	Infineon	BLF7G10L-250	Base station
PTF 140451E	Infineon	BLF1046	Broadcast
PTF 140451F	Infineon	BLF145	Broadcast
PTF 141501E - 150 W	Infineon	BLF147	Broadcast
PTFA 041501E	Infineon	BLF6G10LS-200RN	Base station
PTFA 041501F	Infineon	BLF6G10-135RN	Base station
PTFA 043002E - 300 W	Infineon	BLF6G21-10G	Base station
PTFA 043002E - 300 W	Infineon	BLF1043	Broadcast
PTFA 070601E - 60 W	Infineon	BLF6G10L-260PRN	Base station
PTFA 070601F - 60 W	Infineon	BLF6G10L-40BRN	Base station
PTFA 071701E - 170 W	Infineon	BLF6G10LS-135RN	Base station
PTFA 071701F - 170 W	Infineon	BLF6G10LS-160RN	Base station
PTFA 072401EL - 240 W	Infineon	BLF6G10LS-260PRN	Base station
PTFA 072401FL - 240 W	Infineon	BLF6G10S-45	Base station
PTFA 072401FL - 240 W	Infineon	BLF6H10L-160	Base station
PTFA 080551E - 55 W	Infineon	BLF6H10LS-160	Base station
PTFA 080551F - 55 W	Infineon	BLF8G10L-160	Base station
PTFA 081501E - 150 W	Infineon	BLF8G10L-160V	Base station
PTFA 081501F - 150 W	Infineon	BLF8G10LS-160V	Base station
PTFA 082201E - 220 W	Infineon	BLF8G10LS-200GV	Base station
PTFA 082201F - 220 W	Infineon	BLF8G10LS-270GV	Base station
PTFA 091201E - 120 W	Infineon	BLM6G10-30	Base station
PTFA 091201F - 120 W	Infineon	BLM6G10-30G	Base station
PTFA 142401EL - 240 W	Infineon	BLF175	Broadcast
PTFA 142401FL - 240 W	Infineon	BLF177	Broadcast
PTFA 210601E - 60 W	Infineon	BLF6G20-40	Base station
PTFA 210601F - 60 W	Infineon	BLF6G20-45	Base station
PTFA 210701E - 70 W	Infineon	BLF6G20-75	Base station
PTFA 210701F - 70 W	Infineon	BLF6G20LS-110	Base station
PTFA 211801E - 180 W	Infineon	BLF6G20LS-140	Base station
PTFA 211801F - 180 W	Infineon	BLF6G20LS-180RN	Base station
PTFA 212001E - 200 W	Infineon	BLF6G20LS-75	Base station
PTFA 212001F - 200 W	Infineon	BLF6G20S-230PRN	Base station
PTFA 240451E - 45 W	Infineon	BLF6G27-75	Base station
PTFA 241301E - 130 W	Infineon	BLF6G27L-40P	Base station
PTFA 241301F - 130 W	Infineon	BLF6G27L-50BN	Base station
PTFA 260451E - 45 W	Infineon	BLF6G27LS-100	Base station
PTFA 261301E - 130 W	Infineon	BLF6G27LS-135	Base station
PTFA 261301F - 130 W	Infineon	BLF6G27LS-40P	Base station
PTFB 082817 FH - 250 W	Infineon	BLF6G10L-260PBM	Base station
PTFB 082817 FH - 250 W	Infineon	BLF8G10LS-400PGV	Base station
PTFB 091507FH - 150 W	Infineon	BLF7G10LS-250	Base station
PTFB 093608FV - 360 W	Infineon	BLF8G10LS-160	Base station
PTFB 210801FA - 80 W	Infineon	BLF6G20S-45	Base station
PTFB 211501E - 150 W	Infineon	BLF7G20LS-140P	Base station
PTFB 211501F - 150 W	Infineon	BLF7G20LS-260A	Base station
PTFB 211503EL - 150 W	Infineon	BLF7G21L-160P	Base station
PTFB 211503FL - 150 W	Infineon	BLF7G21LS-160	Base station
PTFB 211803EL - 180 W	Infineon	BLF7G21LS-160P	Base station
PTFB 211803FL - 180 W	Infineon	BLF8G20L-200V	Base station
PTFB 212503EL - 240 W	Infineon	BLF8G20LS-200V	Base station
PTFB 212503FL - 240 W	Infineon	BLF8G20LS-270GV	Base station
PTFB 213004F - 300 W	Infineon	BLF8G20LS-270PGV	Base station
PTFB 241402F - 2x70W	Infineon	BLF7G24L-140	Base station
PTFB 241402F - 2x70W	Infineon	BLF6G27-45	Base station
PTMA 080152M - 20 W	Infineon	BLF6G10-160RN	Base station
PTMA 080302M - 30 W	Infineon	BLF6G10-200RN	Base station
PTMA 080304M - 2 X 15 W	Infineon	BLF6G10-45	Base station
PTMA 180402M - 40 W	Infineon	BLF6G20-110	Base station
PTMA 210152M - 20 W	Infineon	BLF6G20-180PN	Base station
PTMA 210452EL - 45 W	Infineon	BLF6G20-180RN	Base station
PTMA 210452FL - 45 W	Infineon	BLF6G20-230PRN	Base station
R0605250L	RFMD	BGS67A	CATV RA
R0605250L	Standard	BGY66B	CATV RA
R0605300L	Standard	BGY68	CATV RA
R0605300L	RFMD	BGY68	CATV RA
R1005250L	RFMD	BGY66B	CATV RA
R2005200P12	RFMD	BGY67	CATV RA

Manufacturer type	Manufacturer	NXP type	Product family
R2005240	Standard	BGY67A	CATV RA
R2005240	RFMD	BGY67A	CATV RA
R2005240P12	RFMD	BGY67A	CATV RA
R2005350L	RFMD	BGR269	CATV RA
RF3826	RFMD	BLF7G24L-100	Base station
RF3863	RFMD	BGU7051	MMIC
RF3863	RFMD	BGU7052	MMIC
RF3863	RFMD	BGU7053	MMIC
RF3928	RFMD	BLS7G2933S-150	A&D
RF3928B	RFMD	BLS6G2933S-130	A&D
RF3931	RFMD	BLF6G38-10	Base station
RF3931	RFMD	BLS6G3135-120	A&D
RF3932	RFMD	BLF6G38-100	Base station
RF3933	RFMD	BLF6G38-10G	Base station
RF3934	RFMD	BLF6G38-25	Base station
RFFC2072	RFMD	BGX721x	MMIC
RFG1M09090	RFMD	BLF6G10-200RN	Base station
RFG1M09180	RFMD	BLF6G10-45	Base station
RFG1M20090	RFMD	BLF6G20-110	Base station
RFG1M20180	RFMD	BLF6G20-180PN	Base station
RFHA1000	RFMD	BLF6G10-135RN	Base station
RFHA1003	RFMD	BLF6G10LS-200RN	Base station
RFHA1006	RFMD	BLF6G10-160RN	Base station
RFHA3942	RFMD	BLS7G3135LS-350P	A&D
RN142G	Rohm	BAP1321-03	PIN diode
RN142S	Rohm	BAP1321-02	PIN diode
RN242CS	Rohm	BAP51LX	PIN diode
RN731V	Rohm	BAP50-03	PIN diode
RN739D	Rohm	BAP50-04	PIN diode
RN739F	Rohm	BAP50-04W	PIN diode
S10040200P	RFMD	CGY1041	CATV PP
S10040220GT	RFMD	CGY1041	CATV PP
S10040220P	RFMD	CGY1041	CATV PP
S10040230GT	RFMD	CGY1043	CATV PP
S10040240P	RFMD	CGY1043	CATV PP
S10040280GT	RFMD	CGY1047	CATV PP
S10040340	RFMD	CGY1034	CATV PP
S595T	Vishay	BF1105	FET
S595TR	Vishay	BF1105R	FET
S595TRW	Vishay	BF1105WR	FET
S7540185	Standard	BGY785A	CATV PPA
S7540215	Standard	BGY787	CATV PPA
S8740180GT	RFMD	BGY885A	CATV PP
S8740190	Standard	BGD812	CATV PD
S8740190	RFMD	BGY885A	CATV PP
S8740200P	RFMD	BGY887	CATV PP
S8740220	Standard	BGD814	CATV PD
S8740220GT	RFMD	BGY887	CATV PP
S8740220P	RFMD	BGY887	CATV PP
S8740230	Standard	BGD816L	CATV PD
S8740240GT	RFMD	BGY887	CATV PP
S8740240P	RFMD	BGY887	CATV PP
S8740240P12	RFMD	BGY887	CATV PP
S8740260GT	RFMD	CGY887A	CATV PP
S8740280GT	RFMD	CGY887B	CATV PP
S8740340	RFMD	CGY888C	CATV PP
S8740340PT	RFMD	CGY888C	CATV PP
SD1013	Microsemi	BLF178P	Broadcast
SD1013-03	Microsemi	BLF174XRS	Broadcast
SD1014-06	Microsemi	BLF174XR	Broadcast
SD1526-01	Microsemi	BLA0912-250R	A&D
SDV701Q	AUK	BB179	Varicap
SDV704Q	AUK	BB178	Varicap
SDV705Q	AUK	BB182	Varicap
SGA8343Z	Sirenza	BFG425W	WB trs 5-7
SKY65048	Skyworks	BGU7051	MMIC
SKY65066	Skyworks	BGU7053	MMIC
SKY65084	Skyworks	BGU7052	MMIC
SMA3101	Sanyo	BGA2851	MMIC
SMA3101	Sanyo	BGA2851	MMIC
SMA3103	Sanyo	BGA2867	MMIC
SMA3103	Sanyo	BGA2867	MMIC
SMA3107	Sanyo	BGA2803	MMIC
SMA3107	Sanyo	BGA2803	MMIC
SMA3109	Sanyo	BGA2817	MMIC
SMA3109	Sanyo	BGA2817	MMIC
SMA3111	Sanyo	BGA2851	MMIC

Manufacturer type	Manufacturer	NXP type	Product family
SMA3111	Sanyo	BGA2851	MMIC
SMA3113	Sanyo	BGA2869	MMIC
SMA3113	Sanyo	BGA2869	MMIC
SMA3117	Sanyo	BGA2869	MMIC
SMA3117	Sanyo	BGA2869	MMIC
SMP1302-004	Skyworks	BAP50-05	PIN diode
SMP1302-005	Skyworks	BAP50-04	PIN diode
SMP1302-011	Skyworks	BAP50-03	PIN diode
SMP1302-074	Skyworks	BAP50-05W	PIN diode
SMP1302-075	Skyworks	BAP50-04W	PIN diode
SMP1302-079	Skyworks	BAP50-02	PIN diode
SMP1304-001	Skyworks	BAP70-03	PIN diode
SMP1304-011	Skyworks	BAP70-03	PIN diode
SMP1307-001	Skyworks	BAP70-03	PIN diode
SMP1307-011	Skyworks	BAP70-03	PIN diode
SMP1320-004	Skyworks	BAP65-05	PIN diode
SMP1320-011	Skyworks	BAP65-03	PIN diode
SMP1320-074	Skyworks	BAP65-05W	PIN diode
SMP1321-001	Skyworks	BAP1321-03	PIN diode
SMP1321-005	Skyworks	BAP1321-04	PIN diode
SMP1321-011	Skyworks	BAP1321-03	PIN diode
SMP1321-075	Skyworks	BAP1321-04	PIN diode
SMP1321-079	Skyworks	BAP1321-02	PIN diode
SMP1322-004	Skyworks	BAP65-05	PIN diode
SMP1322-011	Skyworks	BAP65-03	PIN diode
SMP1322-074	Skyworks	BAP65-05W	PIN diode
SMP1322-079	Skyworks	BAP65-02	PIN diode
SMP1340-011	Skyworks	BAP63-03	PIN diode
SMP1340-079	Skyworks	BAP63-02	PIN diode
SMP1352-011	Skyworks	BAP64-03	PIN diode
SMP1352-079	Skyworks	BAP64-02	PIN diode
SMV1235-004	Skyworks	BB181	Varicap
SMV1236-004	Skyworks	BB156	Varicap
SST111	Standard	PMBFJ111	FET
SST112	Standard	PMBFJ112	FET
SST113	Standard	PMBFJ113	FET
SST174	Standard	PMBFJ174	FET
SST175	Standard	PMBFJ175	FET
SST176	Standard	PMBFJ176	FET
SST177	Standard	PMBFJ177	FET
SST201	Standard	BFT46	FET
SST202	Standard	BFR31	FET
SST203	Standard	BFR30	FET
SST308	Standard	PMBFJ308	FET
SST309	Standard	PMBFJ309	FET
SST310	Standard	PMBFJ310	FET
SST4391	Standard	PMBF4391	FET
SST4392	Standard	PMBF4392	FET
SST4393	Standard	PMBF4393	FET
SST4856	Standard	BSR56	FET
SST4857	Standard	BSR57	FET
SST4859	Standard	BSR56	FET
SST4860	Standard	BSR57	FET
SST4861	Standard	BSR58	FET
SVC201SPA	Sanyo	BB187	Varicap
SXA-389B	RFMD	BGA7024	MMIC
SXA-389B	RFMD	BGA7124	MMIC
SXA-389B	RFMD	BGA7124	MMIC
SXA-389B	RFMD	BGA7204	MMIC
SXB-4089	RFMD	BGA7027	MMIC
SXB-4089	RFMD	BGA7127	MMIC
T1G4005528-FS	Triquint	BLF6G38-25	Base station
T1G4005528-FS	Triquint	BLS6G3135-120	A&D
T1G4005528-FS	Triquint	BLS6G3135-20	A&D
T1L2003028-SP	Triquint	BLL6H0514L-130	A&D
T1P2701012-SP	Triquint	BLS6G2731-120	A&D
TAN150	Microsemi	BLS7G2325L-105	A&D
TAN250A	Microsemi	BLL6H1214LS-500	A&D
TAN300	Microsemi	BLL6H1214LS-250	A&D
TAN350	Microsemi	BLL6H1214L-250	A&D
TAN75A	Microsemi	BLL6H1214-500	A&D
TBB1016	Renesas Electronics	BF1204	FET
TMF3201J	AUK	BF1204	FET
TMF3202Z	AUK	BF1202WR	FET
TMPF4091	Standard	PMBF4391	FET
TMPF4092	Standard	PMBF4392	FET
TMPF4093	Standard	PMBF4393	FET

Manufacturer type	Manufacturer	NXP type	Product family
TMPF4391	Standard	PMBF4391	FET
TMPF4392	Standard	PMBF4392	FET
TMPF4393	Standard	PMBF4393	FET
TMPFB246A	Standard	BSR56	FET
TMPFB246B	Standard	BSR57	FET
TMPFB246C	Standard	BSR58	FET
TMPFJ111	Standard	PMBFJ111	FET
TMPFJ112	Standard	PMBFJ112	FET
TMPFJ113	Standard	PMBFJ113	FET
TMPFJ174	Standard	PMBFJ174	FET
TMPFJ175	Standard	PMBFJ175	FET
TMPFJ176	Standard	PMBFJ176	FET
TMPFJ177	Standard	PMBFJ177	FET
TPR400	Microsemi	BLA1011-2	A&D
TPR400	Microsemi	BLA1011-200	A&D
TPR400A	Microsemi	BLA6G1011-200R	A&D
TPR500	Microsemi	BLL1214-250	A&D
TPR500A	Microsemi	BLA6H1011-600	A&D
TPR700	Microsemi	BLA6G1011LS-200RG	A&D
TRF370315	TI	BGX710x	MMIC
TRF370417	TI	BGX710x	MMIC
TRF3705	TI	BGX710x	MMIC
TSDF54040	Vishay	BF1102	FET
TSDF54040-GS08	Vishay	BF1102	FET
TSDF54040X-GS08	Vishay	BF1102	FET
TSDF54040XR-GS08	Vishay	BF1102R	FET
uPC2709	Renesas Electronics	BGA2709	MMIC
uPC2711	Renesas Electronics	BGA2711	MMIC
uPC2712	Renesas Electronics	BGA2712	MMIC
uPC2745	Renesas Electronics	BGA2001	MMIC
uPC2746	Renesas Electronics	BGA2001	MMIC
uPC2748	Renesas Electronics	BGA2748	MMIC
uPC2771	Renesas Electronics	BGA2771	MMIC
uPC3224	Renesas Electronics	BGA2851	MMIC
uPC3224	Renesas Electronics	BGA2851	MMIC
uPC3226	Renesas Electronics	BGA2867	MMIC
uPC3226	Renesas Electronics	BGA2867	MMIC
uPC3227	Renesas Electronics	BGA2851	MMIC
uPC3227	Renesas Electronics	BGA2851	MMIC
uPC3232	Renesas Electronics	BGA2869	MMIC
uPC3232	Renesas Electronics	BGA2869	MMIC
uPC3240	Renesas Electronics	BGA2802	MMIC
uPC3240	Renesas Electronics	BGA2802	MMIC
uPC3241	Renesas Electronics	BGA2817	MMIC
uPC3241	Renesas Electronics	BGA2817	MMIC
uPC8112	Renesas Electronics	BGA2022	MMIC
UPC8230TU	Renesas Electronics	BGU7007	MMIC
UPC8236T6N	Renesas Electronics	BGU8007	MMIC
uPD5740T6N	Renesas Electronics	BGU7045	MMIC
uPD5756T6N	Renesas Electronics	BGU7045	MMIC
UTV005	Microsemi	BLF888B	Broadcast
UTV005P	Microsemi	BLF888AS	Broadcast
UTV010	Microsemi	BLF888A	Broadcast
UTV020	Microsemi	BLF888	Broadcast
UTV040	Microsemi	BLF884PS	Broadcast
UTV080	Microsemi	BLF884P	Broadcast
UTV120	Microsemi	BLF879P	Broadcast
UTV200	Microsemi	BLF878	Broadcast
UTV8100B	Microsemi	BLF861A	Broadcast

5.2 Cross-references: NXP discontinued types versus NXP replacement types

In alphabetical order of manufacturer discontinued type

Abbreviations:

BS diode	Band switch diode
CATV	Community antenna television system
FET	Field effect transistor
Varicap	Varicap diode
WB trs	Wideband transistor
RFP trs	RF Power transistor

NXP discontinued type	Product family NXP	Replacement type NXP
BA277-01	BS diode	BA277
BA278	BS diode	BA277
BA792	BS diode	BA591
BAP142L	PIN diode	BAP142LX
BAP51-01	PIN diode	BAP51LX
BAP51L	PIN diode	BAP51LX
BAP55L	PIN diode	BAP55LX
BB132	Varicap	BB152
BB145	Varicap	BB145B
BB145B-01	Varicap	BB145B
BB151	Varicap	BB135
BB157	Varicap	BB187
BB178L	Varicap	BB178LX
BB179BL	Varicap	BB179BLX
BB179L	Varicap	BB179LX
BB181LX	Varicap	BB181
BB182B	Varicap	BB182
BB182LX	Varicap	BB182
BB187L	Varicap	BB187LX
BB190	Varicap	BB149
BB202LX	Varicap	BB202
BB804	Varicap	BB207
BBY42	Varicap	BBY40
BF1101	FET	BF1211
BF1101R	FET	BF1211R
BF1101WR	FET	BF1211WR
BF1203	FET	BF1203
BF1205	FET	BF1210
BF1205C	FET	BF1210
BF1206F	FET	BF1208
BF245A	FET	BF545A
BF245B	FET	BF545B
BF245C	FET	BF545C
BF689K	WB trs	BFS17
BF763	WB trs	BFS17
BF851A	FET	BF861A
BF851C	FET	BF861C
BF992/01	FET	BF992
BFC505	WB trs	BFM505
BFC520	WB trs	BFM520
BFET505	WB trs	BFM505
BFET520	WB trs	BFM520
BFG17A	WB trs	BFS17A
BFG197	WB trs	BFG198
BFG197/X	WB trs	BFG198
BFG25AW/XR	WB trs	BFG25AW/X
BFG410W/CA	WB trs	BFG410W
BFG425W/CA	WB trs	BFG425W
BFG505/XR	WB trs	BFG505/X
BFG505W/XR	WB trs	BFG505
BFG520W/XR	WB trs	BFG520W/X
BFG590/XR	WB trs	BFG590/X
BFG590W	WB trs	BFG590
BFG590W/XR	WB trs	BFG590
BFG67/XR	WB trs	BFG67
BFG92A	WB trs	BFG92A/X

NXP discontinued type	Product family NXP	Replacement type NXP
BFG92A/XR	WB trs	BFG92A/X
BFG93A/XR	WB trs	BFG93A/X
BFQ34/01	WB trs	BFG35
BFR92	WB trs	BFR92A
BFR92AR	WB trs	BFR92A
BFR92AT	WB trs	BFR92AW
BFR93	WB trs	BFR92A
BFR93AT	WB trs	BFR93AW
BFR93R	WB trs	BFR93A
BFU510	WB trs	BFU725F/N1
BFU540	WB trs	BFU725F/N1
BFU725F	WB trs	BFU725F/N1
BGA2031	WB trs	BGA2031/1
BGD502	CATV	BGD712
BGD602D	CATV	BGD712
BGD702	CATV	BGD712
BGD702D	CATV	BGD712
BGD702D/08	CATV	BGD712
BGD702N	CATV	BGD712
BGD704	CATV	BGD714
BGD704N	CATV	BGD714
BGD802	CATV	BGD812
BGD802N	CATV	BGD812
BGD802N/07	CATV	BGD812
BGD804	CATV	BGD814
BGD804N	CATV	BGD814
BGD804N/02	CATV	BGD814
BGD902	CATV	BGD812
BGD902L	CATV	BGD812
BGD904	CATV	BGD814
BGD904L	CATV	BGD814
BGD906	CATV	CGD942C
BGE788	CATV	BGE788C
BGE847BO/FC	CATV	BGO827/SC0
BGE847BO/FC0	CATV	BGO827/SC0
BGE847BO/FC1	CATV	BGO827/SC0
BGE847BO/SC	CATV	BGO827/SC0
BGE847BO/SC0	CATV	BGO827/SC0
BGE887BO/FC	CATV	BGO827/SC0
BGE887BO/FC1	CATV	BGO827/SC0
BGE887BO/SC	CATV	BGO827/SC0
BGO807C	CATV	BGO807C/FCO
BGO807CE	CATV	BGO807CE/SCO
BGO827	CATV	BGO807CE/FCO
BGO827/SCO	CATV	BGO807CE/SCO
BGO847/FC0	CATV	BGO827/SC0
BGO847/FC01	CATV	BGO827/SC0
BGO847/SC0	CATV	BGO827/SC0
BGQ34/01	WB trs	BFG35
BGU2003	WB trs	BGA2003
BGX885/02	CATV	BGX885N
BGY1085A/07	CATV	BGY1085A
BGY585A	CATV	BGY785A
BGY587	CATV	BGY787
BGY587B	CATV	BGE787B
BGY588N	CATV	BGY588C

NXP discontinued type	Product family NXP	Replacement type NXP
BGY66B/04	CATV	BGY66B
BGY67/04	CATV	BGY67
BGY67/09	CATV	BGY67
BGY67/14	CATV	BGY67
BGY67/19	CATV	BGY67
BGY67A/04	CATV	BGY67A
BGY67A/14	CATV	BGY67A
BGY68/01	CATV	BGY68
BGY685A	CATV	BGY785A
BGY685AD	CATV	BGY785A
BGY685AL	CATV	BGY785A
BGY687	CATV	BGY787
BGY687B	CATV	BGE787B
BGY687B/02	CATV	BGE787B
BGY785A/07	CATV	BGY785A
BGY785A/09	CATV	BGY785A
BGY785AD	CATV	BGY785A
BGY785AD/06	CATV	BGY785A
BGY785AD/8M	CATV	BGY885A
BGY787/02	CATV	BGY787
BGY787/07	CATV	BGY787
BGY787/09	CATV	BGY787
BGY847BO/SC	CATV	BGO827/SC0
BGY883	CATV	BGY885A
BGY887/02	CATV	BGY887
BGY887BO/SC	CATV	BGO827/SC0
BLC6G22-100	RFP trs	BLF6G22-100
BLC6G22-100	RFP trs	BLF6G22LS-100
BLF1822-10	RFP trs	BLF6G21-10G
BLF2043	RFP trs	BLF6G21-10G
BLF2045	RFP trs	BLF6G20-45BLF6G22-45
BLF3G22-30	RFP trs	BLF6G22-45
BLF4G08LS-160A	RFP trs	BLF6G10LS-160RN
BLF4G08LS-160A	RFP trs	BLF6G10LS-160RN
BLF6G10-135RN	RFP trs	BLF6G10LS-135RN
BLF6G10-160RN	RFP trs	BLF6G10LS-160RN
BLF6G10-160RNL	RFP trs	BLF6G10-200RN
BLF6G20-180RN	RFP trs	BLF7G20LS-200
BLF6G20-40	RFP trs	BLF6G20-45
BLF6G20S-230PRN	RFP trs	BLF7G20LS-250P
BLF6G22-180RN	RFP trs	BLF7G22LS-200

NXP discontinued type	Product family NXP	Replacement type NXP
BLF6G22LS-180PN	RFP trs	BLF7G22LS-200
BLF6G22LS-75	RFP trs	BLF7G22LS-100
BLF6G27-10	RFP trs	BLF6G27-10G
BLF6G27-10	RFP trs	BLF6G27-10G
BLF6G27-135	RFP trs	BLF7G27L-135
BLF6G27LS-135	RFP trs	BLF7G27LS-140
BLF6G27LS-135	RFP trs	BLF7G27LS-140
BLF6G27LS-75S	RFP trs	BLF6G27LS-75
BLF6G27LS-75S	RFP trs	BLF6G27LS-75
BLF6G38-10	RFP trs	BLF6G38-10G
BLF6G38-10	RFP trs	BLF6G38-10G
BLS2731-110	RFP trs	BLS6G2731-120
BLS2731-110T	RFP trs	BLS6G2731-120
BLS2731-20	RFP trs	BLS6G2731-6G
BLS2731-50	RFP trs	BLS6G2731-6G
CGD1042	CATV	CGD1042H
CGD1044	CATV	CGD1044H
CGD914	CATV	CGD1042H
CGY887A	CATV	CGY1043
CGY887B	CATV	CGY1047
GD923	CATV	CGD942C
J108	FET	PMBFJ108
J109	FET	PMBFJ109
J110	FET	PMBFJ110
J111	FET	PMBFJ111
J112	FET	PMBFJ112
J113	FET	PMBFJ113
J174	FET	PMBFJ174
J175	FET	PMBFJ175
J176	FET	PMBFJ176
J177	FET	PMBFJ177
OM7650	CATV	BGY588C
OM7670	CATV	BGE788C
ON4831-2	CATV	BGY885A
ON4876	CATV	BGY1085A
ON4890	CATV	BGD712
ON4990	CATV	BGD885
PMBT3640/AT	WB trs	BFS17
PN4392	FET	PMBF4392
PN4393	FET	PMBF4393
TFF1004HN	Satellite IC	TFF1014HN

6. Packing and packaging information

6.1 Packing quantities per package with relevant ordering code

Package	Package dimensions L x W x H (mm)	Packing quantity	Product 12NC ending	Packing method
SOD323/SC-76	1.7 x 1.25 x 0.9	3,000	115	8 mm tape and reel
		10,000	135	8 mm tape and reel
SOD523/SC-79	1.2 x 0.8 x 0.6	3,000	115	8 mm tape and reel
		10,000	135	8 mm tape and reel
		8,000	315	2 mm pitch tape and reel
		20,000	335	2 mm pitch tape and reel
SOD882D	1.0 x 0.6 x 0.4	10,000	315	reel
SOT23	2.9 x 1.3 x 0.9	3,000	215	8 mm tape and reel
		10,000	235	8 mm tape and reel
SOT54	4.6 x 3.9 x 5.1	5,000	112	bulk, delta pinning
		5,000	412	bulk, straight leads
		10,000	116	tape and reel, wide pitch
		10,000	126	tape ammopack, wide pitch
SOT89/SC-62	4.5 x 2.5 x 1.5	1,000	115	12 mm tape and reel
		4,000	135	12 mm tape and reel
SOT115	44.5 x 13.65 x 20.4	100	112	4 tray/box
SOT143(N/R)	2.9 x 1.3 x 0.9	3,000	215	8 mm tape and reel
		10,000	235	8 mm tape and reel
SOT223/SC-73	6.7 x 3.5 x 1.6	1,000	115	12 mm tape and reel
		4,000	135	12 mm tape and reel
SOT307	10 x 10 x 1.75	1,500	518	13" tape and reel dry pack
		96	551	1 tray dry pack
		480	557	5 tray dry pack
SOT323/SC-70	2.0 x 1.25 x 0.9	3,000	115	8 mm tape and reel
		10,000	135	8 mm tape and reel
SOT341	5.3 x 10.2 x 2.0	1,000	118	13" tape and reel
		658	112	tube
SOT343(N/R)	2.0 x 1.25 x 0.9	3,000	115	8 mm tape and reel
		10,000	135	8 mm tape and reel
SOT343F	2.1 x 1.25 x 0.7	3,000	115	8 mm tape and reel
SOT360	6.5 x 4.4 x 0.9	2,500	118	16 mm tape and reel
SOT363/SC-88	2.0 x 1.25 x 0.9	3,000	115	8 mm tape and reel
		10,000	135	8 mm tape and reel
SOT401	5 x 5 x 1.4	2,000	118	13" tape and reel
		360	151	1 tray
SOT403	5.0 x 4.4 x 0.9	2,500	118	12 mm tape and reel
SOT416/SC-75	1.6 x 0.8 x 0.75	3,000	115	8 mm tape and reel
SOT467B	9.78 x 18.29 x 4.67	60	112	blister, tray
		20	112	blister, tray
SOT467C	20.45 x 18.54 x 4.67	60	112	blister, tray
		20	112	blister, tray
SOT502A	19.8 x 9.4 x 4.1	60	112	blister, tray
		300	135	reel

Package	Package dimensions L x W x H (mm)	Packing quantity	Product 12NC ending	Packing method
SOT502B	19.8 x 9.4 x 4.1	60	112	blister, tray
		100	118	reel
SOT538A	5.1 x 4.1 x 2.6	160	112	blister, tray
SOT539A	31.25 x 9.4 x 4.65	60	112	blister, tray
		300	135	reel
SOT540A	21.85 x 10.2 x 5.4	60	112	blister, tray
SOT608A	10.1 x 10.1 x 4.2	60	112	blister, tray
		60	112	blister, tray
		300	135	reel
SOT608B	10.1 x 10.1 x 4.2	60	112	blister, tray
		100	118	reel
		300	135	reel
SOT616	4.0 x 4.0 x 0.85	6,000	118	12 mm tape and reel
		1,500	115	8 mm tape and reel
		100	551	tray
SOT617	5 x 5 x 0.85	6,000	118	tape and reel
SOT618	6 x 6 x 0.85	4,000	118	13" tape and reel
		1,000	515	7" tape and reel dry pack
		490	551	1 tray dry pack
		2,450	157	5 tray
SOT638	14 x 14 x 1	1,000	518	13" tape and reel dry pack
		90	551	1 tray dry pack
		450	557	5 tray dry pack
SOT650-1	3.0 x 3.0 x 0.85	6,000	118	reel
SOT666	1.6 x 1.2 x 0.7	4,000	115	8 mm tape and reel
SOT684	8 x 8 x 0.85	1,000	518	13" tape and reel dry pack
		260	151	1 tray
		260	551	1 tray dry pack
		1,300	157	5 tray dry pack
SOT724	8.7 x 3.9 x 1.47	2,500	118	16 mm tape and reel
SOT753	2.9 x 1.5 x 1.0	3,000	125	8 mm tape and reel
SOT763-1	2.5 x 3.5 x 0.85	3,000	115	reel
		6,000	135	
SOT778	6.0 x 6.0 x 0.85	490	551	tray
		4,000	518	multiple trays
SOT822-1	15.9 x 11 x 3.6	180	127	tube
SOT834-1	15.9 x 11 x 3.15	180	127	tube
SOT883	1.0 x 0.6 x 0.5	3,000	115	8 mm tape and reel
SOT886	1.45 x 1.0 x 0.5	5,000	115	8 mm tape and reel
SOT891	1.0 x 1.0 x 0.5	5,000	132	8 mm tape and reel
SOT908	3.0 x 3.0 x 0.85	6,000	118	12 mm tape and reel
SOT922-1	17.4 x 9.4 x 3.88	60	112	blister, tray
SOT975B	6.5 x 6.5 x 3.3	180	112	blister, tray
		100	118	tape and reel
SOT975C	6.5 x 6.5 x 3.3	180	112	blister, tray
		100	118	tape and reel
SOT979A	31.25 x 10.2 x 5.3	60	112	blister, tray
SOT1110A	41.28 x 17.12 x 5.36	60	112	blister, tray
		100	118	reel
SOT1110B	41.15 x 36.32 x 4.68	60	112	blister, tray

	Package	Package dimensions L x W x H (mm)	Packing quantity	Product 12NC ending	Packing method
	SOT1112A	16.65 x 20.32 x 4.205	60 100	112 118	blister, tray reel
	SOT1112B	16.65 x 15.22 x 4.205	60 100	112 118	blister, tray reel
	SOT1120A	9.4 x 19.815 x 4.1	60 100	112 118	blister, tray reel
	SOT1120B	9.4 x 19.815 x 4.1	60 100	112 118	blister, tray reel
	SOT1121A	34.16 x 19.94 x 4.75	60 100	112 118	blister, tray reel
	SOT1121B	20.70 x 19.94 x 4.75	60 100	112 118	blister,tray reel
	SOT1121C	13.4 x 20.575 x 3.785	DEV	DEV	DEV
	SOT1130A	20.45 x 17.12 x 4.65	60	112	blister, tray
	SOT1130B	9.91 x 17.12 x 4.65	60	112	blister, tray
	SOT1135A	20.45 x 19.94 x 4.65	60 100	112 118	blister, tray reel
	SOT1135B	16.65 x 9.78 x 4.205	60 100	112 118	blister, tray reel
	SOT1135C	16.65 x 9.78 x 4.205	60 100	112 118	blister, tray reel
	SOT1138	19.48 x 20.57 x 3.9	DEV	DEV	DEV
	SOT1179	4.0 x 6.0 x 0.85	DEV	DEV	DEV
	SOT1198-1	10.0 x 5.5 x 0.8	1000	115	reel
	SOT1204	13.2 x 20.57 x 3.9	DEV	DEV	DEV
	SOT1209	2 x 1.3 x 0.35	5000	147	8 mm tape and reel
	SOT1240B	21.60 x 20.575 x 3.875	DEV	DEV	DEV
	SOT1240C	18.00 x 20.575 x 3.875	DEV	DEV	DEV
	SOT1242B	22.60 x 32.45 x 4.455	DEV	DEV	DEV
	SOT1242C	18.00 x 32.45 x 4.455	DEV	DEV	DEV
	SOT1244B	19.43 x 20.575 x 3.875	DEV	DEV	DEV
	SOT1244C	18.00 x 20.575 x 3.875	DEV	DEV	DEV

6.2 Marking codes

In general, device marking includes the part number, some manufacturing information and the NXP logo. If packages are too small for the full-length part number a shorter, coded part number – marking code – is used (where % = placeholder for manufacturing site code). The full-length part number is always printed on the packing label on the box or bulk-pack in which the devices are supplied.

p = made in Hong Kong
t = made in Malaysia
W = made in China

Marking code	Final product	Package
10%	BAT18	SOT23
13%	BB207	SOT23
20%	BF545A	SOT23
21%	BF545B	SOT23
22%	BF545C	SOT23
24%	BF556A	SOT23
25%	BF556B	SOT23
26%	BF556C	SOT23
28%	BF861A	SOT23
29%	BF861B	SOT23
30%	BF861C	SOT23
31%	BFR505	SOT23
32%	BFR520	SOT23
33%	BFR540	SOT23
34%	BFT25A	SOT23
35%	ON4288	SOT23
36%	ON4690	SOT23
38%	PMBFJ108	SOT23
39%	PMBFJ109	SOT23
40%	PMBFJ110	SOT23
41%	PMBFJ111	SOT23
42%	PMBFJ112	SOT23
47%	PMBFJ113	SOT23
48%	PMBFJ308	SOT23
49%	PMBFJ309	SOT23
50%	PMBFJ310	SOT23
1	BA277	SOD523
2	BB182	SOD523
2	BB182/L	SOD523
4	BB189	SOD523
4	BB189/L	SOD523
7	BA891	SOD523
7	BA891/L	SOD523
8	BB178	SOD523
8	BB178/L	SOD523
9	BB179	SOD523
9	BB179/L	SOD523
%1V	BFR93AW/DG	SOT323
%1W	BAP51-05W	SOT323
%6G	PMBF4393	SOT23
%6J	PMBF4391	SOT23
%6K	PMBF4392	SOT23
%6N	ON5088	SOT343
%6S	PMBFJ176	SOT23
%6W	PMBFJ175	SOT23
%6X	PMBFJ174	SOT23
%6Y	PMBFJ177	SOT23
%7N	ON5087	SOT343
%8N	ON5089	SOT343
%AB	BF1210	SOT363
%BG	PMBFJ177/DG	SOT23
%E7	BGA2800	SOT363
%E8	BGA2801	SOT363
%E9	BGA2815	SOT363
%EA	BGA2816	SOT363
%EB	BGA2850	SOT363
%EC	BGA2865	SOT363
%ED	BGA2866	SOT363
%M1	BF908	SOT143
%M2	BF908R	SOT143
%M3	BF909	SOT143
%M4	BF909R	SOT143

Marking code	Final product	Package
%M5	BF909A	SOT143
%M6	BF909AR	SOT143
%M7	BF904A	SOT143
%M8	BF904AR	SOT143
%M9	BSS83	SOT143
%M9	ON4906	SOT143
%MA	BF991	SOT143
%MB	BF992	SOT143
%MC	BF904	SOT143
%MD	BF904R	SOT143
%ME	BFG505	SOT143
%MF	BFG520	SOT143
%MG	BFG540	SOT143
%MH	BFG590	SOT143
%MK	BFG505/X	SOT143
%ML	BFG520/X	SOT143
%MM	BFG540/X	SOT143
%MM	ON4832	SOT143
%MN	BFG590/X	SOT143
%MP	BFG520/XR	SOT143
%MP	ON4973	SOT143
%MR	BFG540/XR	SOT143
%MS	BFG10	SOT143
%MT	BFG10/X	SOT143
%MU	BFG25A/X	SOT143
%MV	BFG67/X	SOT143
%MW	BFG92A/X	SOT143
%MX	BFG93A/X	SOT143
%MY	BF1100	SOT143
%MZ	BF1100R	SOT143
%VA	BGU7041	SOT363
%VB	BGU7042	SOT363
LE	BAP64LX	SOD882D
L4	BB179LX	SOD882D
LC	BAP55LX	SOD882D
L3	BB178LX	SOD882D
1A	BGU6101	SOT1209
1B	BGU6102	SOT1209
1B%	BGA2717	SOT363
1C	BGU6104	SOT1209
1C%	BAP50-05	SOT23
1N%	BAP70-04W	SOT323
2A%	BF862	SOT23
2E	PRF949/DG	SOT416
2L	BF1208	SOT666
2N	BF1206F	SOT666
4A	BF1208D	SOT666
4K%	BAP64-04	SOT23
4L%	BAP50-04	SOT23
4W%	BAP64-04W	SOT323
5K%	BAP64-05	SOT23
5W%	BAP64-05W	SOT323
6F%	BAP1321-04	SOT23
6K%	BAP64-06	SOT23
6W%	BAP50-04W	SOT323
7K%	BAP65-05	SOT23
8K%	BAP70-05	SOT23
A1	BA591	SOD323
A1	BB208-02	SOD523
A1	BGA2001	SOT343
A1	BAP64Q	SOT753
A2	BB208-03	SOD323

Marking code	Final product	Package
A2	BB184	SOD523
A2	BGA2002	SOT343
A2	BAP70Q	SOT753
A2%	BGA2022	SOT363
A3	BAP64-03	SOD323
A3	BB198	SOD523
A3	BGA2003	SOT343
A3%	BGA2031/1	SOT363
A5	BAP51-03	SOD323
A5%	BGA2011	SOT363
A6%	BGA2012	SOT363
A7%	BFG310W/XR	SOT343
A8	BAP50-03	SOD323
A8%	BFG325W/XR	SOT343
A8%	PMBFJ620	SOT363
A9	BAP70-03	SOD323
AC	BGU7005	SOT886
B3	BGU7003	SOT891
B5%	BSR12	SOT23
B6	BGU7007	SOT886
B6%	BGA2715	SOT363
B7	BGU7008	SOT886
B7%	BF862/B	SOT23
B7%	BFU725F/N1	SOT343
B7%	BGA2716	SOT363
BA%	BGA2714	SOT363
BCp	BFQ591	SOT89
C	BB179B	SOD523
C1%	BGM1011	SOT363
C2%	BGM1012	SOT363
C4%	BGM1013	SOT363
C5%	BGM1014	SOT363
CL	BAP70-03/DG	SOD323
D1	BFU610F	SOT343
D2	BAP63-03	SOD323
D2	BFU630F	SOT343
D3	BAP65-03	SOD323
D3	BFU660F	SOT343
D4	BFU690F	SOT343
D5	BFU710F	SOT343
D6	BFU730F	SOT343
D7	BFU760F	SOT343
D8	BFU790F	SOT343
E1%	BFS17	SOT23
E1%	BFS17/FD	SOT23
E1%	ON4438	SOT23
E1%	BFS17W	SOT323
E2%	BFS17A	SOT23
E2%	ON5023	SOT23
E2%	BGA2712	SOT363
E3%	BGA2709	SOT363
E6	BAP55L	SOD882
FB	BFQ19	SOT89
FF	BFQ18A	SOT89
FG	BFQ149	SOT89
G2	BA278	SOD523
G2%	BGA2711	SOT363
G3%	BGA2748	SOT363
G4%	BGA2771	SOT363
G5%	BGA2776	SOT363
K1	BAP51-02	SOD523
K2	BAP51-05W	SOD523

Marking code	Final product	Package
K4	BAP50-02	SOD523
K5	BAP63-02	SOD523
K6	BAP65-02	SOD523
K7	BAP1321-02	SOD523
K8	BAP70-02	SOD523
K9	BB199	SOD523
L1	BB202LX	SOD882T
L2	BB202	SOD523
L2	BAP51LX	SOD882T
L2%	BF1203	SOT363
L3	BB178LX	SOD882T
L3%	BF1204	SOT363
L4	BB179LX	SOD882T
L4%	BF1205	SOT363
L5	BB179BLX	SOD882T
L6	BB181LX	SOD882T
L6%	BF1206	SOT363
L7	BB182LX	SOD882T
L8	BA792	SOD110
L8	BB187LX	SOD882T
L9%	BF1208	SOT363
LA	BF1201WR	SOT343
LA%	BF1201	SOT143
LB	BAP50LX	SOD882T
LB%	BF1201R	SOT143
LB%	PBR941B	SOT23
LC	BAP55LX	SOD882T
LD	BAP63LX	SOD882T
LD%	BF1202	SOT143
LD%	BF1202/L	SOT143
LE	BAP64LX	SOD882T
LE	BF1202WR	SOT343
LE	BF1202WR/L	SOT343
LE%	BF1202R	SOT143
LF	BAP65LX	SOD882T
LF%	BF1211	SOT143
LG	BAP142LX	SOD882T
LG%	BF1212	SOT143
LH	BAP1321LX	SOD882T
LH%	BF1211R	SOT143
LJ%	BGU7044	SOT363
LK%	BF1212R	SOT143
LK%	BGU7045	SOT363
LP%	BGA2867	SOT363
LR%	BGA2874	SOT363
LS%	BGA2817	SOT363
M1%	BFR30	SOT23
M2%	BFR31	SOT23
M2%	BF1207	SOT363
M26	BF908	SOT143
M27	BF908R	SOT143
M28	BF909	SOT143
M29	BF909R	SOT143
M3%	BFT46	SOT23
M33	BF909A	SOT143
M34	BF909AR	SOT143
M4%	BF1215	SOT363
M4%	BSR56	SOT23
M41	BF904A	SOT143
M42	BF904AR	SOT143
M5%	BSR57	SOT23
M5%	BF1216	SOT363
M56	BF1100	SOT143
M57	BF1100R	SOT143
M6%	BSR58	SOT23
M6%	BF1205C	SOT363
M7%	BF1218	SOT363
M74	BSS83	SOT143
M74	ON4906	SOT143
M91	BF991	SOT143
M92	BF992	SOT143
MA%	BGA2802	SOT363
MB	BF998WR	SOT343
MB%	BGA2803	SOT363
MC	BF904WR	SOT343
MC%	BGA2851	SOT363
MD	BF908WR	SOT343
ME	BF909WR	SOT343
MF	BF1100WR	SOT343
MG	BF909AWR	SOT343
MG%	BF994S	SOT143

Marking code	Final product	Package
MH	BF904AWR	SOT343
MH%	BF996S	SOT143
MK	BF1211WR	SOT343
ML	BF1212WR	SOT343
ML	BF1212WR/L	SOT343
MO%	BF998	SOT143
MO%	BF998R	SOT143
MO4	BF904	SOT143
MO6	BF904R	SOT143
N	BB181	SOD523
N0	BFR505T	SOT416
N0%	BFS505	SOT323
N0%	BFM505	SOT363
N2	BFR520T	SOT416
N2%	BFS520	SOT323
N2%	BFM520	SOT363
N3	BFG520W	SOT343
N33	BFG505	SOT143
N36	BFG520	SOT143
N37	BFG540	SOT143
N38	BFG590	SOT143
N39	BFG505/X	SOT143
N4	BFG520W/X	SOT343
N4	BFQ540	SOT89
N4%	BFS540	SOT323
N42	BFG520/X	SOT143
N43	BFG540/X	SOT143
N43	ON4832	SOT143
N44	BFG590/X	SOT143
N48	BFG520/XR	SOT143
N49	BFG540/XR	SOT143
N6%	BFS25A	SOT323
N7	BFG540W/X	SOT343
N70	BFG10	SOT143
N71	BFG10/X	SOT143
N8	BFG540W/XR	SOT343
N9	BFG540W	SOT343
N9%	BAP70AM	SOT363
NA	BF1105WR	SOT343
NA%	BF1105R	SOT143
NB	BF1109WR	SOT343
NB%	BF1109R	SOT143
NC	BF1101WR	SOT343
NC%	BF1101R	SOT143
ND	BFG424W	SOT343
ND%	BF1101	SOT143
NE	BFG424F	SOT343
NE%	BF1105	SOT143
NF%	BF1109	SOT143
NG%	BF1108	SOT143
NG%	BF1108/L	SOT143
NH%	BF1108R	SOT143
NL%	BFR94A	SOT23
33*	BFR540	SOT143
P1	BB131	SOD323
P1	BFG21W	SOT343
P2%	BFR92A	SOT23
P2%	ON4640	SOT23
P2%	BFR92AW	SOT323
P3	BFG403W	SOT343
p3A	BGA6289	SOT89
P4	BFG410W	SOT343
p4A	BGA6489	SOT89
P5	BB135	SOD323
P5	BFG425W	SOT343
p5A	BGA6589	SOT89
P6	BFG480W	SOT343
p6K	BGA7024	SOT89
p6L	BGA7027	SOT89
P8	BB148	SOD323
P9	BB149	SOD323
PB	BB152	SOD323
PC	BB153	SOD323
PF	BB156	SOD323
PL	BB149A	SOD323
R2%	BFR93A	SOT23
R2%	BFR93AW	SOT323
R5%	BFR93AR	SOT23
R7%	BFR106	SOT23
R8%	BFG93A	SOT143
S	BAP64-02	SOD523

Marking code	Final product	Package
S1%	BFG310/XR	SOT143
S2%	BFG325/XR	SOT143
S2%	BBY40	SOT23
S3%	BF1107	SOT23
S6%	BF510	SOT23
S7%	BF511	SOT23
S8%	BF512	SOT23
S9%	BF513	SOT23
SB%	BF1214	SOT363
SB%	BF1214/L	SOT363
SC%	BB201	SOT23
SC%	BGU7031	SOT363
SD%	BGU7032	SOT363
SE%	BGU7033	SOT363
T5	BFG10W/X	SOT343
TA%	BGA2818	SOT363
TB%	BGA2819	SOT363
UW	BGU7003W	SOT886
UY	BGU7004	SOT886
UZ	BGU8007	SOT886
V0%	PBR941	SOT23
V0%	PRF947	SOT323
V1	BFG25AW/X	SOT343
V1%	BFT25	SOT23
V11	BFG25A/X	SOT143
V12	BFG67/X	SOT143
V14	BFG92A/X	SOT143
V15	BFG93A/X	SOT143
V2%	BFQ67	SOT23
V2%	ON5042	SOT23
V2%	BFQ67W	SOT323
V3%	BFG67	SOT143
V4%	BAP64-06W	SOT323
V6%	BAP65-05W	SOT323
V8	BAP1321-03	SOD323
VA	BF1217WR	SOT343
VB	BF1118W	SOT343
VC	BF1118WR	SOT343
VC%	BF1118	SOT143
VD%	BF1118R	SOT143
W1	BF1102	SOT363
W1%	BFT92	SOT23
W1%	BFT92W	SOT323
W2%	PBR951	SOT23
W2%	PRF957	SOT323
W2%	BF1102R	SOT363
W4%	BAP50-05W	SOT323
W6%	BAP51-04W	SOT323
W7%	BAP51-06W	SOT323
W9%	BAP63-05W	SOT323
X	BB187	SOD523
X	BB187/L	SOD523
X1%	BFT93	SOT23
X1%	BFT93W	SOT323
XG%	BFR94AW	SOT323
YC%	BGA2870	SOT363
Z	BB145B	SOD523
ZA%	BFU668F	SOT343
ZC	BFU710LX	SOT883
ZD	BFU730LX	SOT883
ZE	BFU760LX	SOT883
ZF	BFU790LX	SOT883
ZK%	ON5052	SOT23
ZX%	BGA2022/C	SOT363

7. Abbreviations

3-way	Doherty design using 3 discrete transistors
AM	Amplitude Modulation
ASIC	Application Specific Integrated Circuit
ASYM	Asymmetrical design of Doherty (main and peak device are different)
BPF	Band Pass Filter
BUC	Block Upconverter
CATV	Community Antenna Television
CDMA	Code Division Multiple Access
CMMB	Chinese Multimedia Mobile Broadcasting
CMOS	Complementary Metal Oxide Semiconductor
CQS	Customer Qualification Samples
DAB	Digital Audio Broadcasting
DECT	Digital Enhanced Cordless Telecommunications
DiSEqC	Digital Satellite Equipment Control
DSB	Digital Signal Processor
DVB	Digital Video Broadcasting
EDGE	Enhanced Data Rates for GSM Evolution
ESD	Electro Static Device
FET	Field Effect Transistor
FM	Frequency Modulation
GaAs	Gallium Arsenide
GaN	Gallium Nitride
Gen	Generation
GPS	Global Positioning System
GSM	Global System for Mobile communications
HBT	Heterojunction Bipolar Transistor
HDTV	High Definition Television
HF	High Frequency (3-30 MHz)
HFC	Hybrid Fiber Coax
HFET	Heterostructure Field Effect Transistor
HPA	High Power Amplifier
HVQFN	Plastic thermally enHanced Very thin Quad Flat pack No leads
IF	Intermediate Frequency
ISM	Industrial, Scientific, Medical - reserved frequency bands
LDMOS	Laterally Diffused Metal-Oxide-Semiconductor
LNA	Low Noise Amplifier
LNB	Low Noise Block
LO	Local Oscillator
LPF	Low Pass Filter
MESFET	Metal Semiconductor Field Effect Transistor
MMIC	Monolithic Microwave Integrated Circuit
MMPP	Main and peak devices realized separately in halves of push-pull transistor
MPPM	Main and peak device realized in same push-pull transistor (2 times)
MoCA	Multimedia over Coax Alliance
MOSFET	Metal–Oxide–Semiconductor Field Effect Transistor
MPA	Medium Power Amplifier
MRI	Magnetic Resonance Imaging
NF	Noise Figure
NIM	Network Interface Module
NMR	Nuclear Magnetic Resonance
PA	Power Amplifier
PAR	Peak to Average Ratio
PEP	Peak Envelope Power
pHEMT	pseudomorphic High Electron Mobility Transistor
PLL	Phase Locked Loop
QUBiC	Quality BiCMOS
RF	Radio Frequency
RFS	Release for Supply
RoHS	Restriction of Hazardous Substances
Rx	Receive
SARFT	State Administration for Radio, Film and Television
SER	Serializer
SiGe:C	Sillicon Germanium Carbon
SMATV	Satellite Master Antenna Television
SMD	Surface Mounted Device
SPDT	Single Pole, Double Throw
SYM	Symmetrical design of Doherty (main and peak device are the same type of transistor)
TD-SCDMA	Time Division-Synchronous Code Division Multiple Access
TCAS	Traffic Collision Avoidance Systems
TMA	Tower Mounted Amplifier
TTFF	Time to First Fix
Tx	Transmit
UHF	Ultra High Frequency (470-860 MHz)
UMTS	Universal Mobile Telecommunications System
VCO	Voltage Controlled Oscillator
VGA	Variable Gain Amplifier
VHF	Very High Frequency (30-300 MHz)
VoIP	Voice over Internet Protocol
VSAT	Very Small Aperture Terminal
WCDMA	Wideband Code Division Multiple Access
WiMAX	Worldwide Interoperability for Microwave Access
WLAN	Wireless Local Area Network

8. Contacts and web links

How to contact your authorized distributor or local NXP representative.

Authorized distributors

Asia Pacific:
http://www.nxp.com/profile/sales/asia_pacific_dist

Europe / Africa / Middle East:
http://www.nxp.com/profile/sales/europe_dist

North America:
http://www.nxp.com/profile/sales/northamerica_dist

Local NXP offices

Asia Pacific:
http://www.nxp.com/profile/sales/asia_pacific

Europe / Africa / Middle East:
http://www.nxp.com/profile/sales/europe

North America:
http://www.nxp.com/profile/sales/northamerica

Web links

NXP Semiconductors:
http://www.nxp.com

NXP RF Manual web page:
http://www.nxp.com/rfmanual

NXP varicaps:
http://www.nxp.com/varicaps

NXP RF PIN diodes:
http://www.nxp.com/pindiodes

NXP RF schottky diodes:
http://www.nxp.com/rfschottkydiodes

NXP RF MMICs:
http://www.nxp.com/mmics

NXP RF wideband transistors:
http://www.nxp.com/rftransistors

NXP RF power & base stations:
http://www.nxp.com/rfpower

NXP RF FETs:
http://www.nxp.com/rffets

NXP RF CATV electrical & optical:
http://www.nxp.com/catv

NXP RF applications:
http://www.nxp.com/rf

NXP application notes:
http://www.nxp.com/technical-support-portal/50812/50961

NXP cross-references:
http://www.nxp.com

NXP packaging:
http://www.nxp.com/package

NXP end-of-life:
http://www.nxp.com/products/eol

NXP quality handbook:
http://www.standardics.nxp.com/quality/handbook

NXP literature:
http://www.nxp.com/products/discretes/documentation

NXP sales offices and distributors:
http://www.nxp.com/profile/sales

9. Product index

Type	Portfolio chapter
1PS10SB82	3.2.4
1PS66SB17	3.2.4
1PS66SB82	3.2.4
1PS70SB82	3.2.4
1PS70SB84	3.2.4
1PS70SB85	3.2.4
1PS70SB86	3.2.4
1PS76SB17	3.2.4
1PS79SB17	3.2.4
1PS88SB82	3.2.4
BA277	3.2.3
BA591	3.2.3
BA891	3.2.3
BAP1321-02	3.2.2
BAP1321-03	3.2.2
BAP1321-04	3.2.2
BAP1321LX	3.2.2
BAP142LX	3.2.2
BAP50-02	3.2.2
BAP50-03	3.2.2
BAP50-04	3.2.2
BAP50-04W	3.2.2
BAP50-05	3.2.2
BAP50-05W	3.2.2
BAP50LX	3.2.2
BAP51-02	3.2.2
BAP51-03	3.2.2
BAP51-04W	3.2.2
BAP51-05W	3.2.2
BAP51-06W	3.2.2
BAP51LX	3.2.2
BAP55LX	3.2.2
BAP63-02	3.2.2
BAP63-03	3.2.2
BAP63-05W	3.2.2
BAP63LX	3.2.2
BAP64-02	3.2.2
BAP64-03	3.2.2
BAP64-04	3.2.2
BAP64-04W	3.2.2
BAP64-05	3.2.2
BAP64-05W	3.2.2
BAP64-06	3.2.2
BAP64-06W	3.2.2
BAP64LX	3.2.2
BAP64Q	3.2.2
BAP65-02	3.2.2
BAP65-03	3.2.2
BAP65-05	3.2.2
BAP65-05W	3.2.2
BAP65LX	3.2.2
BAP70-02	3.2.2
BAP70-03	3.2.2
BAP70-04W	3.2.2
BAP70-05	3.2.2
BAP70AM	3.2.2

Type	Portfolio chapter
BAP70Q	3.2.2
BAT17	3.2.4
BAT18	3.2.3
BB131	3.2.1
BB135	3.2.1
BB145B	3.2.1
BB148	3.2.1
BB149	3.2.1
BB149A	3.2.1
BB152	3.2.1
BB153	3.2.1
BB156	3.2.1
BB178	3.2.1
BB178LX	3.2.1
BB179	3.2.1
BB179B	3.2.1
BB179BLX	3.2.1
BB179LX	3.2.1
BB181	3.2.1
BB182	3.2.1
BB184	3.2.1
BB187	3.2.1
BB187LX	3.2.1
BB189	3.2.1
BB198	3.2.1
BB199	3.2.1
BB201	3.2.1
BB202	3.2.1
BB207	3.2.1
BB208-02	3.2.1
BB208-03	3.2.1
BBY40	3.2.1
BF1102(R)	3.5.2
BF1105	3.5.2
BF1105R	3.5.2
BF1105WR	3.5.2
BF1107	3.5.2
BF1108	3.5.2
BF1108R	3.5.2
BF1108W	3.5.2
BF1108WR	3.5.2
BF1118	3.5.2
BF1118R	3.5.2
BF1118W	3.5.2
BF1118WR	3.5.2
BF1201	3.5.2
BF1201R	3.5.2
BF1201WR	3.5.2
BF1202	3.5.2
BF1202R	3.5.2
BF1202WR	3.5.2
BF1203	3.5.2
BF1204	3.5.2
BF1206	3.5.2
BF1207	3.5.2
BF1208	3.5.2

Type	Portfolio chapter
BF1208D	3.5.2
BF1210	3.5.2
BF1211	3.5.2
BF1211R	3.5.2
BF1211WR	3.5.2
BF1212	3.5.2
BF1212R	3.5.2
BF1212WR	3.5.2
BF1214	3.5.2
BF1215	3.5.2
BF1216	3.5.2
BF1217	3.5.2
BF1218	3.5.2
BF510	3.5.1
BF511	3.5.1
BF512	3.5.1
BF513	3.5.1
BF545A	3.5.1
BF545B	3.5.1
BF545C	3.5.1
BF556A	3.5.1
BF556B	3.5.1
BF556C	3.5.1
BF861A	3.5.1
BF861B	3.5.1
BF861C	3.5.1
BF862	3.5.1
BF904A	3.5.2
BF904AR	3.5.2
BF904AWR	3.5.2
BF908	3.5.2
BF908R	3.5.2
BF908WR	3.5.2
BF909A	3.5.2
BF909AR	3.5.2
BF909AWR	3.5.2
BF991	3.5.2
BF992	3.5.2
BF994S	3.5.2
BF996S	3.5.2
BF998	3.5.2
BF998R	3.5.2
BF998WR	3.5.2
BFG10	3.3.1
BFG10/X	3.3.1
BFG10W/X	3.3.1
BFG135	3.3.1
BFG198	3.3.1
BFG21W	3.3.1
BFG25A/X	3.3.1
BFG25AW	3.3.1
BFG25AW/X	3.3.1
BFG31	3.3.1
BFG310/XR	3.3.1
BFG310W/XR	3.3.1
BFG325/XR	3.3.1

Type	Portfolio chapter
BFG325W/XR	3.3.1
BFG35	3.3.1
BFG403W	3.3.1
BFG410W	3.3.1
BFG424F	3.3.1
BFG424W	3.3.1
BFG425W	3.3.1
BFG480W	3.3.1
BFG505	3.3.1
BFG505/X	3.3.1
BFG505W	3.3.1
BFG505W/X	3.3.1
BFG505W/XR	3.3.1
BFG520	3.3.1
BFG520/X	3.3.1
BFG520/XR	3.3.1
BFG520W	3.3.1
BFG520W/X	3.3.1
BFG540	3.3.1
BFG540/X	3.3.1
BFG540/XR	3.3.1
BFG540W	3.3.1
BFG540W/X	3.3.1
BFG540W/XR	3.3.1
BFG541	3.3.1
BFG590	3.3.1
BFG590/X	3.3.1
BFG591	3.3.1
BFG67	3.3.1
BFG67/X	3.3.1
BFG92A/X	3.3.1
BFG93A	3.3.1
BFG93A/X	3.3.1
BFG94	3.3.1
BFG97	3.3.1
BFM505	3.3.1
BFM520	3.3.1
BFM540	3.3.1
BFQ149	3.3.1
BFQ18A	3.3.1
BFQ19	3.3.1
BFQ591	3.3.1
BFQ67	3.3.1
BFQ67W	3.3.1
BFR106	3.3.1
BFR30	3.5.1
BFR31	3.5.1
BFR505	3.3.1
BFR505T	3.3.1
BFR520	3.3.1
BFR520T	3.3.1
BFR540	3.3.1
BFR92A	3.3.1
BFR92AW	3.3.1
BFR93A	3.3.1
BFR93AR	3.3.1

Type	Portfolio chapter
BFR93AW	3.3.1
BFR94A	3.3.1
BFR94AW	3.3.1
BFS17	3.3.1
BFS17A	3.3.1
BFS17W	3.3.1
BFS25A	3.3.1
BFS505	3.3.1
BFS520	3.3.1
BFS540	3.3.1
BFT25	3.3.1
BFT25A	3.3.1
BFT46	3.5.1
BFT92	3.3.1
BFT92W	3.3.1
BFT93	3.3.1
BFT93W	3.3.1
BFU610F	3.3.1
BFU630F	3.3.1
BFU660F	3.3.1
BFU690F	3.3.1
BFU710F	3.3.1
BFU725F/N1	3.3.1
BFU730F	3.3.1
BFU730LX	3.3.1
BFU760F	3.3.1
BFU790F	3.3.1
BGA2001	3.4.1
BGA2002	3.4.1
BGA2003	3.4.1
BGA2011	3.4.1
BGA2012	3.4.1
BGA2022	3.4.1
BGA2031/1	3.4.1
BGA2709	3.4.1
BGA2712	3.4.1
BGA2714	3.4.1
BGA2715	3.4.1
BGA2716	3.4.1
BGA2717	3.4.1
BGA2748	3.4.1
BGA2776	3.4.1
BGA2800	3.4.1
BGA2801	3.4.1
BGA2802	3.4.1
BGA2803	3.4.1
BGA2815	3.4.1
BGA2817	3.4.1
BGA2818	3.4.1
BGA2819	3.4.1
BGA2850	3.4.1
BGA2851	3.4.1
BGA2865	3.4.1
BGA2866	3.4.1
BGA2867	3.4.1
BGA2868	3.4.1
BGA2869	3.4.1
BGA2870	3.4.1
BGA2874	3.4.1
BGA6101	3.4.1

Type	Portfolio chapter
BGA6102	3.4.1
BGA6104	3.4.1
BGA6289	3.4.1
BGA6489	3.4.1
BGA6589	3.4.1
BGA7014	3.4.1
BGA7017	3.4.1
BGA7020	3.4.1
BGA7024	3.4.1
BGA7027	3.4.1
BGA7124	3.4.1
BGA7127	3.4.1
BGA7130	3.4.1
BGA7204	3.4.1
BGA7210	3.4.1
BGA7350	3.4.1
BGA7351	3.4.1
BGD712	3.6.3
BGD712C	3.6.3
BGD714	3.6.3
BGD812	3.6.3
BGD814	3.6.3
BGD816L	3.6.3
BGE787B	3.6.1
BGE788C	3.6.1
BGE885	3.6.1
BGM1013	3.4.1
BGM1014	3.4.1
BGO807C	3.6.4
BGO807CE	3.6.4
BGR269	3.6.5
BGU6101	3.4.1
BGU6102	3.4.1
BGU6104	3.4.1
BGU7003	3.4.1
BGU7003W	3.4.1
BGU7004	3.4.1
BGU7005	3.4.1
BGU7007	3.4.1
BGU7008	3.4.1
BGU7031	3.4.1
BGU7032	3.4.1
BGU7033	3.4.1
BGU7041	3.4.1
BGU7042	3.4.1
BGU7044	3.4.1
BGU7045	3.4.1
BGU7051	3.4.1
BGU7052	3.4.1
BGU7053	3.4.1
BGU7060	3.4.1
BGU7061	3.4.1
BGU7062	3.4.1
BGU7063	3.4.1
BGU8006	3.4.1
BGU8007	3.4.1
BGX7100	3.4.2
BGX7101	3.4.2
BGX7220	3.4.2
BGX7221	3.4.2

Type	Portfolio chapter
BGX7300	3.4.2
BGX885N	3.6.1
BGY588C	3.6.1
BGY66B	3.6.5
BGY67	3.6.5
BGY67A	3.6.5
BGY68	3.6.5
BGY785A	3.6.1
BGY787	3.6.1
BGY835C	3.6.1
BGY885A	3.6.1
BGY887	3.6.1
BGY887B	3.6.1
BGY888	3.6.1
BLA0912-250R	3.7.3.1
BLA1011-10	3.7.3.1
BLA1011-2	3.7.3.1
BLA1011-300	3.7.3.1
BLA1011(S)-200R	3.7.3.1
BLA6G1011-200R	3.7.3.1
BLA6G1011LS-200RG	3.7.3.1
BLA6H0912-500	3.7.3.1
BLA6H1011-600	3.7.3.1
BLD6G21L(S)-50	3.7.1.3
BLD6G22L(S)-50	3.7.1.4
BLF174XR(S)	3.7.2
BLF178XR(S)	3.7.2
BLF2425M6L(S)180P	3.7.2
BLF2425M7L(S)140	3.7.2
BLF2425M7L(S)200	3.7.2
BLF2425M7L(S)250P	3.7.2
BLF25M612(G)	3.7.2
BLF369	3.7.2.1
BLF3G21-30	3.7.1.4
BLF3G21-6	3.7.1.4
BLF571	3.7.2.1
BLF572XR(S)	3.7.2
BLF573(S)	3.7.2.1
BLF574	3.7.2.1
BLF574XR(S)	3.7.2
BLF578	3.7.2.1
BLF578XR(S)	3.7.2
BLF642	3.7.2.2
BLF645	3.7.2.1
BLF647	3.7.2.1
BLF647P(S)	3.7.2
BLF6G10(LS)-135RN	3.7.1.1
BLF6G10(LS)-160RN	3.7.1.1
BLF6G10(LS)-200RN	3.7.1.1
BLF6G10(S)-45	3.7.1.1
BLF6G10L-40BRN	3.7.1.1
BLF6G10L(S)-260PRN	3.7.1.1
BLF6G15L-250PBRN	3.7.1.2
BLF6G15L-40BRN	3.7.1.2
BLF6G15L(S)-40RN	3.7.1
BLF6G20(LS)-110	3.7.1.3
BLF6G20(LS)-180RN	3.7.1.3
BLF6G20(LS)-75	3.7.1.3
BLF6G20(S)-45	3.7.1.3
BLF6G20LS-140	3.7.1.3

Type	Portfolio chapter
BLF6G20S-230PRN	3.7.1.3
BLF6G21-10G	3.7.1.2
BLF6G22(LS)-180PN	3.7.1.4
BLF6G22(LS)-180RN	3.7.1.4
BLF6G22(S)-45	3.7.1.4
BLF6G22L-40BN	3.7.1.4
BLF6G22L(S)-40P	3.7.1.4
BLF6G22LS-100	3.7.1.4
BLF6G22LS-130	3.7.1.4
BLF6G22LS-75	3.7.1.4
BLF6G27-10(G)	3.7.1.5
BLF6G27(LS)-100	3.7.1.6
BLF6G27(LS)-135	3.7.1.6
BLF6G27(LS)-75	3.7.1.6
BLF6G27(S)-45	3.7.1.6
BLF6G27L(S)-40P	3.7.1.6
BLF6G27L(S)-50BN	3.7.1.6
BLF6G38-10(G)	3.7.1.7
BLF6G38(LS)-100	3.7.1.7
BLF6G38(LS)-50	3.7.1.7
BLF6G38(S)-25	3.7.1.7
BLF6H10L(S)-160	3.7.1
BLF7G10L(S)-250	3.7.1.1
BLF7G15LS-200	3.7.1.2
BLF7G15LS-300P	3.7.1.2
BLF7G20L(S)-200	3.7.1.3
BLF7G20L(S)-250P	3.7.1.3
BLF7G20L(S)-90P	3.7.1.3
BLF7G20LS-140P	3.7.1.3
BLF7G20LS-260A	3.7.1
BLF7G21L(S)-160P	3.7.1.4
BLF7G21LS-160	3.7.1.4
BLF7G22L(S)-100P	3.7.1.4
BLF7G22L(S)-130	3.7.1.4
BLF7G22L(S)-160	3.7.1.4
BLF7G22L(S)-200	3.7.1.4
BLF7G22L(S)-250P	3.7.1.4
BLF7G24L(S)-100	3.7.1.5
BLF7G24L(S)-140	3.7.1.5
BLF7G24L(S)-160P	3.7.1
BLF7G27L-200PB	3.7.1.6
BLF7G27L(S)-100	3.7.1.6
BLF7G27L(S)-140	3.7.1.6
BLF7G27L(S)-150P	3.7.1.6
BLF7G27L(S)-75P	3.7.1.6
BLF7G27L(S)-90P	3.7.1.6
BLF7G27LS-90PG	3.7.1
BLF861A	3.7.2.1
BLF871(S)	3.7.2.1
BLF878	3.7.2.2
BLF879P	3.7.2.2
BLF881(S)	3.7.2.2
BLF884P(S)	3.7.2.2
BLF888	3.7.2.2
BLF888A(S)	3.7.2.2
BLF888B(S)	3.7.2.2
BLF8G10L(S)-160	3.7.1.1
BLF8G10L(S)-160V	3.7.1
BLF8G10L(S)-300P	3.7.1
BLF8G10LS-200GV	3.7.1

Type	Portfolio chapter
BLF8G10LS-270GV	3.7.1
BLF8G10LS-400PGV	3.7.1
BLF8G20L(S)-200V	3.7.1
BLF8G20LS-270GV	3.7.1
BLF8G20LS-270PGV	3.7.1
BLF8G22LS-160BV	3.7.1
BLF8G22LS-200GV	3.7.1
BLF8G22LS-270GV	3.7.1
BLF8G22LS-400PGV	3.7.1
BLF8G24L(S)-200P	3.7.1
BLF8G27LS-140	3.7.1.6
BLF8G27LS-140G	3.7.1
BLF8G27LS-140V	3.7.1
BLF8G27LS-200PGV	3.7.1
BLF8G27LS-280PGV	3.7.1
BLL1214-250R	3.7.3.2
BLL1214-35	3.7.3.2
BLL6G1214L-250	3.7.3.2
BLL6G1214LS-250	3.7.3
BLL6H0514-25	3.7.3.2
BLL6H0514L(S)-130	3.7.3.2
BLL6H1214(LS)-500	3.7.3.2
BLL6H1214L(S)-250	3.7.3.2
BLL6H1214LS-500	3.7.3
BLM6G10-30(G)	3.7.1.1
BLM6G22-30(G)	3.7.1.4
BLM7G22S-60PB(G)	3.7.1
BLP7G07S-140P(G)	3.7.1
BLP7G09S-140P(G)	3.7.1
BLP7G22-10	3.7.1
BLP7G22-10*	3.7.1.4
BLS2933-100	3.7.3.3
BLS6G2731-6G	3.7.3.3
BLS6G2731(S)-120	3.7.3.3
BLS6G2731S-130	3.7.3.3
BLS6G2735L(S)-30	3.7.3
BLS6G2933S-130	3.7.3.3
BLS6G3135(S)-120	3.7.3.3
BLS6G3135(S)-20	3.7.3.3
BLS7G2325L-105	3.7.3.3
BLS7G2729L(S)-350P	3.7.3
BLS7G2933S-150	3.7.3.3
BLS7G3135L(S)-350P	3.7.3
BLT50	3.3.1
BLT70	3.3.1

Type	Portfolio chapter
BLT80	3.3.1
BLT81	3.3.1
BLU6H0410L(S)-600P	3.7.3
BSR56	3.5.1
BSR57	3.5.1
BSR58	3.5.1
BSS83	3.5.2
CGD1040HI	3.6.3
CGD1042H	3.6.3
CGD1042HI	3.6.3
CGD1044H	3.6.3
CGD1044HI	3.6.3
CGD1046HI	3.6.3
CGD942C	3.6.3
CGD944C	3.6.3
CGD982HCI	3.6.3
CGD985HCI	3.6.3
CGD987HCI	3.6.3
CGY1032	3.6.2
CGY1041	3.6.2
CGY1043	3.6.2
CGY1047	3.6.2
CGY1049	3.6.2
CGY1085A	3.6.2
CGY888C	3.6.1
CLF1G0035-100	3.7.4
CLF1G0035-50	3.7.4
CLF1G0060-10	3.7.4
CLF1G0060-30	3.7.4
JenNet	3.8
JenNet-IP	3.8
JN5142-001	3.8
JN5142-J01	3.8
JN5148-001	3.8
JN5148-001-M00	3.8
JN5148-001-M03	3.8
JN5148-001-M04	3.8
JN5148-J01	3.8
JN5148-Z01	3.8
PBR941	3.3.1
PBR951	3.3.1
PMBD353	3.2.4
PMBD354	3.2.4
PMBF4391	3.5.1
PMBF4392	3.5.1

Type	Portfolio chapter
PMBF4393	3.5.1
PMBFJ108	3.5.1
PMBFJ109	3.5.1
PMBFJ110	3.5.1
PMBFJ111	3.5.1
PMBFJ112	3.5.1
PMBFJ113	3.5.1
PMBFJ174	3.5.1
PMBFJ175	3.5.1
PMBFJ176	3.5.1
PMBFJ177	3.5.1
PMBFJ308	3.5.1
PMBFJ309	3.5.1
PMBFJ310	3.5.1
PMBFJ620	3.5.1
PRF947	3.3.1
PRF949	3.3.1
PRF957	3.3.1
TFF1003HN	3.4.4
TFF1007HN	3.4.4
TFF1014HN	3.4.3
TFF1015HN	3.4.3
TFF1017HN	3.4.3
TFF11070HN	3.4.4
TFF11073HN	3.4.4
TFF11077HN	3.4.4
TFF11080HN	3.4.4
TFF11084HN	3.4.4
TFF11088HN	3.4.4
TFF11092HN	3.4.4
TFF11094HN	3.4.4
TFF11096HN	3.4.4
TFF11101HN	3.4.4
TFF11105HN	3.4.4
TFF11110HN	3.4.4
TFF11115HN	3.4.4
TFF11121HN	3.4.4
TFF11126HN	3.4.4
TFF11132HN	3.4.4
TFF11139HN	3.4.4
TFF11145HN	3.4.4
TFF11152HN	3.4.4
ZigBee PRO	3.8

Notes

Notes

www.nxp.com

© 2012 NXP B.V.
All rights reserved. Reproduction in whole or in part is prohibited without the prior written consent of the copyright owner. The information presented in this document does not form part of any quotation or contract, is believed to be accurate and reliable and may be changed without notice. No liability will be accepted by the publisher for any consequence of its use. Publication thereof does not convey nor imply any license under patent- or other industrial or intellectual property rights.

Date of release: June 2012
Document order number: 9397 750 17272
Printed in the Netherlands

PRINTED CLIMATE NEUTRALLY
certificate number: 53520-1205-1011
www.climatepartner.com

FSC
www.fsc.org
MIX
Paper from responsible sources
FSC® C007370

OCEAN CHIPS
Океан Электроники
Поставка электронных компонентов

Компания «Океан Электроники» предлагает заключение долгосрочных отношений при поставках импортных электронных компонентов на взаимовыгодных условиях!

Наши преимущества:

- Поставка оригинальных импортных электронных компонентов напрямую с производств Америки, Европы и Азии, а так же с крупнейших складов мира;
- Широкая линейка поставок активных и пассивных импортных электронных компонентов (более 30 млн. наименований);
- Поставка сложных, дефицитных, либо снятых с производства позиций;
- Оперативные сроки поставки под заказ (от 5 рабочих дней);
- Экспресс доставка в любую точку России;
- Помощь Конструкторского Отдела и консультации квалифицированных инженеров;
- Техническая поддержка проекта, помощь в подборе аналогов, поставка прототипов;
- Поставка электронных компонентов под контролем ВП;
- Система менеджмента качества сертифицирована по Международному стандарту ISO 9001;
- При необходимости вся продукция военного и аэрокосмического назначения проходит испытания и сертификацию в лаборатории (по согласованию с заказчиком);
- Поставка специализированных компонентов военного и аэрокосмического уровня качества (Xilinx, Altera, Analog Devices, Intersil, Interpoint, Microsemi, Actel, Aeroflex, Peregrine, VPT, Syfer, Eurofarad, Texas Instruments, MS Kennedy, Miteq, Cobham, E2V, MA-COM, Hittite, Mini-Circuits, General Dynamics и др.);

Компания «Океан Электроники» является официальным дистрибьютором и эксклюзивным представителем в России одного из крупнейших производителей разъемов военного и аэрокосмического назначения **«JONHON»**, а так же официальным дистрибьютором и эксклюзивным представителем в России производителя высокотехнологичных и надежных решений для передачи СВЧ сигналов **«FORSTAR»**.

AVIC JONHON

«JONHON» (основан в 1970 г.)

Разъемы специального, военного и аэрокосмического назначения:

(Применяются в военной, авиационной, аэрокосмической, морской, железнодорожной, горно- и нефтедобывающей отраслях промышленности)

«FORSTAR» (основан в 1998 г.)

ВЧ соединители, коаксиальные кабели, кабельные сборки и микроволновые компоненты:

(Применяются в телекоммуникациях гражданского и специального назначения, в средствах связи, РЛС, а так же военной, авиационной и аэрокосмической отраслях промышленности).

FORSTAR®

Телефон: 8 (812) 309-75-97 (многоканальный)
Факс: 8 (812) 320-03-32
Электронная почта: ocean@oceanchips.ru
Web: http://oceanchips.ru/
Адрес: 198099, г. Санкт-Петербург, ул. Калинина, д. 2, корп. 4, лит. А