MP Series
Quartz Crystal

FEATURES

- Standard HC-49/U Package, HC-49/U SMMC Package Option Available
- Stable Frequency Over Temperature and Drive Level
- **Fundamental and 3rd Overtone Crystals**
- Frequency Range 1.8432 – 64 MHz
- Frequency Tolerance, ±30 ppm Standard
- Frequency Stability, ±50 ppm Standard
- Operating Temperature, –20°C to +70°C Standard, -40°C to +85°C Available
- Tape & Reel Packaging Available
- **RoHS/Green Compliant (6/6)**

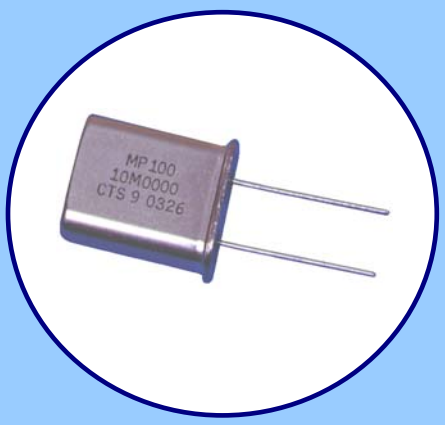

APPLICATIONS

The MP crystal series offers excellent long-term stability and reliability in a proven resistance-weld metal package. The excellent shock performance makes it suitable for microprocessor, telecommunication, industrial, consumer electronics and networking applications.

ORDERING INFORMATION

MP □□□□ - □□□

FREQUENCY/LOAD CODE

Product Frequency/Load Code.
[3 to 4 digits]

Refer to Standard Product Part Numbers table on Page 2.

PRODUCT OPTIONS

INS - Mylar Insulation Spacer
SLV - Insulating Body Sleeve *
SMMC - Surface Mount Lead Form w/ Metal Clip Third Lead *
SM - Surface Mount Lead Form w/ TW Third Lead [Obsolete]
TW - Hold Down Top Wire (welded) [Obsolete]

PACKAGING OPTIONS

Blank - Bulk **
1 - Tape and Reel (SM/SMMC Product Option Only)
2 - Radial Taping (Ammopak)

TEMPERATURE RANGE OPTIONS

Blank - Standard, -20°C to +70°C
E - Extended Temperature Range, -40°C to +85°C

**** Standard packaging is bulk in a bag.**

*** Consult factory for Option availability.**

Non-Standard Ordering Options

- Custom requirements may be available upon request. Use form C052 to detail non-standard parameters. (http://www.ctscorp.com/components/CTS_Crystal_Specifying_Form.xls)
- Contact your local CTS Representative or CTS Customer Service for assistance.

STANDARD PRODUCT PART NUMBERS

Part numbers in **BOLD** are common stock items through CTS authorized distributors. Non-bold part numbers may be stocked or are available for order. Contact your CTS Distributor or local CTS Representative for availability.

FREQUENCY (MHz)	PART NUMBER -20/70°C	PART NUMBER -40/85°C	LOAD CAPACITANCE	OPERATING MODE
1.843200	MP018A	MP018A-E	Series	Fundamental
1.843200	MP018B	MP018B-E	18 pF	Fundamental
1.843200	**MP018S**	MP018S-E	13 pF	Fundamental
2.000000	MP020A	MP020A-E	Series	Fundamental
2.000000	**MP020S**	MP020S-E	20 pF	Fundamental
2.000000	**MP020B**	**MP020B-E**	18 pF	Fundamental
2.457600	**MP024S**	MP024S-E	32 pF	Fundamental
3.579545	MP036	MP036-E	Series	Fundamental
3.579545	**MP036S**	MP036S-E	18 pF	Fundamental
3.686400	MP037A	MP037A-E	Series	Fundamental
3.686400	**MP037**	MP037-E	20 pF	Fundamental
3.686400	**MP037B**	**MP037B-E**	18 pF	Fundamental
4.000000	**MP04A**	MP04A-E	Series	Fundamental
4.000000	**MP040**	MP040-E	20 pF	Fundamental
4.000000	**MP040B**	**MP040B-E**	18 pF	Fundamental
4.032000	MP043A	MP043A-E	Series	Fundamental
4.032000	MP043	MP043-E	20 pF	Fundamental
4.096000	MP042A	MP042A-E	20 pF	Fundamental
4.194304	**MP041**	MP041-E	12 pF	Fundamental
4.915200	MP049A	MP049A-E	Series	Fundamental
4.915200	**MP042**	MP042-E	20 pF	Fundamental
4.915200	**MP049B**	**MP049B-E**	18 pF	Fundamental
5.000000	**MP05B**	MP05B-E	Series	Fundamental
5.000000	**MP05A**	MP05A-E	20 pF	Fundamental
5.000000	**MP050C**	**MP050C-E**	18 pF	Fundamental
5.068000	**MP050**	MP050-E	Series	Fundamental
5.068000	MP051A	MP051A-E	20 pF	Fundamental
5.185000	MP052	MP052-E	Series	Fundamental
5.185000	MP051	MP051-E	20 pF	Fundamental
5.185000	MP052C	MP052C-E	32 pF	Fundamental
5.714300	MP057	MP057-E	Series	Fundamental
5.714300	MP057A	MP057A-E	20 pF	Fundamental
6.000000	MP060A	MP060A-E	Series	Fundamental
6.000000	**MP060**	MP060-E	20 pF	Fundamental
6.000000	**MP060B**	**MP060B-E**	18 pF	Fundamental
6.000000	MP060C	MP060C-E	32 pF	Fundamental
6.144000	**MP061**	MP061-E	20 pF	Fundamental
6.144000	MP061C	MP061C-E	32 pF	Fundamental
6.250000	MP062	MP062-E	30 pF	Fundamental
6.400000	MP064	MP064-E	20 pF	Fundamental
6.553600	MP065	MP065-E	20 pF	Fundamental
6.553600	MP065C	MP065C-E	12 pF	Fundamental
7.372800	**MP073**	MP073-E	Series	Fundamental
7.372800	MP073A	MP073A-E	20 pF	Fundamental
7.372800	MP073B	MP073B-E	18 pF	Fundamental
8.000000	**MP080**	MP080-E	Series	Fundamental
8.000000	**MP080A**	MP080A-E	20 pF	Fundamental
8.000000	**MP080B**	**MP080B-E**	18 pF	Fundamental
8.000000	MP080C	MP080C-E	32 pF	Fundamental
8.192000	MP081B	MP081B-E	18 pF	Fundamental
9.216000	MP092B	MP092B-E	18 pF	Fundamental
9.830400	MP098A	MP098A-E	Series	Fundamental
9.830400	**MP098**	MP098-E	20 pF	Fundamental
9.830400	**MP098B**	**MP098B-E**	18 pF	Fundamental
10.000000	**MP100**	MP100-E	Series	Fundamental
10.000000	MP100A	MP100A-E	20 pF	Fundamental
10.000000	MP100B	MP100B-E	18 pF	Fundamental
10.000000	**MP101**	MP101-E	30 pF	Fundamental

FREQUENCY (MHz)	PART NUMBER -20/70°C	PART NUMBER -40/85°C	LOAD CAPACITANCE	OPERATING MODE
10.738635	**MP107**	MP107-E	32 pF	Fundamental
11.000000	MP110B	MP110B-E	Series	Fundamental
11.000000	MP110A	MP110A-E	20 pF	Fundamental
11.000000	**MP110**	MP110-E	18 pF	Fundamental
11.059200	**MP111**	MP111-E	Series	Fundamental
11.059200	MP111A	MP111A-E	20 pF	Fundamental
11.059200	MP111B	MP111B-E	18 pF	Fundamental
11.059200	MP111C	MP111C-E	32 pF	Fundamental
12.000000	**MP120**	MP120-E	Series	Fundamental
12.000000	MP120A	MP120A-E	20 pF	Fundamental
12.000000	MP120B	MP120B-E	18 pF	Fundamental
12.000000	MP120C	MP120C-E	32 pF	Fundamental
12.288000	MP122C	MP122C-E	Series	Fundamental
12.288000	MP122A	MP122A-E	20 pF	Fundamental
12.288000	MP122B	MP122B-E	18 pF	Fundamental
12.288000	**MP122**	MP122-E	32 pF	Fundamental
14.318180	**MP143**	MP143-E	Series	Fundamental
14.318180	**MP143B**	**MP143B-E**	18 pF	Fundamental
14.745600	**MP147**	MP147-E	Series	Fundamental
14.745600	MP147A	MP147A-E	20 pF	Fundamental
14.745600	MP147B	MP147B-E	18 pF	Fundamental
15.000000	**MP150**	MP150-E	Series	Fundamental
16.000000	**MP160**	MP160-E	Series	Fundamental
16.000000	MP160A	MP160A-E	20 pF	Fundamental
16.000000	MP160B	MP160B-E	18 pF	Fundamental
18.000000	MP180	MP180-E	Series	Fundamental
18.432000	**MP184**	MP184-E	Series	Fundamental
18.432000	MP184A	MP184A-E	20 pF	Fundamental
18.432000	MP184B	MP184B-E	18 pF	Fundamental
19.660800	**MP196**	MP196-E	Series	Fundamental
19.660800	MP196A	MP196A-E	20 pF	Fundamental
19.660800	MP196B	MP196B-E	18 pF	Fundamental
20.000000	**MP200**	MP200-E	Series	Fundamental
20.000000	MP200A	MP200A-E	20 pF	Fundamental
20.000000	MP200B	MP200B-E	18 pF	Fundamental
22.118400	**MP221**	MP221-E	20 pF	Fundamental
22.118400	MP221B	MP221B-E	18 pF	Fundamental
24.000000	**MP240**	MP240-E	Series	Fundamental
24.000000	MP240A	MP240A-E	20 pF	Fundamental
24.000000	MP240B	MP240B-E	18 pF	Fundamental
24.576000	**MP245**	MP245-E	Series	Fundamental
24.576000	MP245B	MP245B-E	18 pF	Fundamental
25.000000	**MP250**	MP250-E	Series	Fundamental
25.000000	MP250A	MP250A-E	20 pF	Fundamental
25.000000	MP250B	MP250B-E	18 pF	Fundamental
27.000000	MP270	MP270-E	Series	3rd Overtone
27.000000	MP270B	MP270B-E	18 pF	3rd Overtone
32.000000	MP320A	MP320A-E	20 pF	3rd Overtone
32.000000	MP320B	MP320B-E	18 pF	3rd Overtone
32.768000	MP327B	MP327B-E	18 pF	3rd Overtone
36.000000	MP360	MP360-E	Series	3rd Overtone
40.000000	MP400	MP400-E	20 pF	3rd Overtone
48.000000	MP480	MP480-E	Series	3rd Overtone
48.000000	MP480A	MP480A-E	20 pF	3rd Overtone
48.000000	MP480B	MP480B-E	18 pF	3rd Overtone
50.000000	MP500B	MP500B-E	18 pF	3rd Overtone
64.000000	MP640B	MP640B-E	18 pF	3rd Overtone

ELECTRICAL CHARACTERISTICS

	PARAMETER	VALUE
ELECTRICAL PARAMETERS	Frequency Range	1.8432 MHz to 64.0 MHz
	Operating Mode	Fundamental or 3rd Overtone
	Crystal Cut	AT-Cut
	Frequency Tolerance @ +25°C	± 30 ppm Standard *
	Frequency Stability Tolerance (Operating Temperature Range, Referenced to 25°C Reading)	± 50 ppm Standard *
	Operating Temperature Range	-20°C to +70°C * -40°C to +85°C Available, See Ordering Information
	Equivalent Series Resistance	See ESR Table
	Load Capacitance or Resonance Mode	See Standard Part Numbers tables *
	Shunt Capacitance (C_0)	7.0 pF Maximum
	Drive Level	100 µW Typical, 1,000 µW Maximum
	Aging @ +25°C	±3 ppm/yr Typical, ±5 ppm/yr Maximum
	Storage Temperature Range	-40°C to +85°C
	Reflow Condition, per JEDEC J-STD-020	+250°C Maximum, 10 Seconds Maximum

* Custom requirements may be available upon request. Use form C052 to detail non-standard parameters.

EQUIVALENT SERIES RESISTANCE TABLE

FREQUENCY RANGE	OSCILLATION MODE	ESR MAXIMUM
1.80 MHz - < 2.00 MHz	Fundamental	600 Ohms
2.00 MHz - < 2.40 MHz	Fundamental	500 Ohms
2.40 MHz - < 3.00 MHz	Fundamental	300 Ohms
3.00 MHz - < 3.70 MHz	Fundamental	200 Ohms
3.70 MHz - < 4.20 MHz	Fundamental	100 Ohms
4.20 MHz - < 4.90 MHz	Fundamental	70 Ohms
4.90 MHz - < 6.00 MHz	Fundamental	50 Ohms
6.00 MHz - < 8.00 MHz	Fundamental	40 Ohms
8.00 MHz - < 10.00 MHz	Fundamental	35 Ohms
10.00 MHz - < 12.50 MHz	Fundamental	30 Ohms
12.50 MHz - < 40.00 MHz	Fundamental	25 Ohms
24.00 MHz - < 64.00 MHz	3rd Overtone	55 Ohms

MECHANICAL SPECIFICATIONS

MP PACKAGE DRAWING

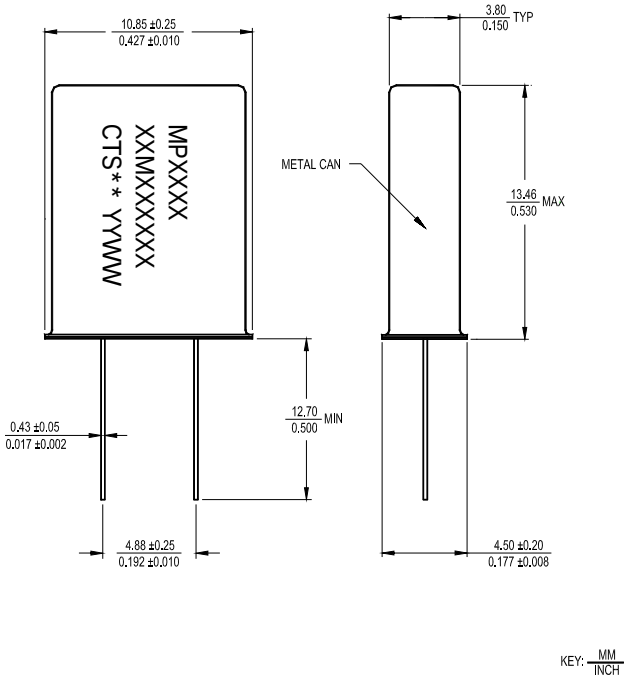

MP PACKAGE W/ WELDED TOP WIRE (TW) OPTION

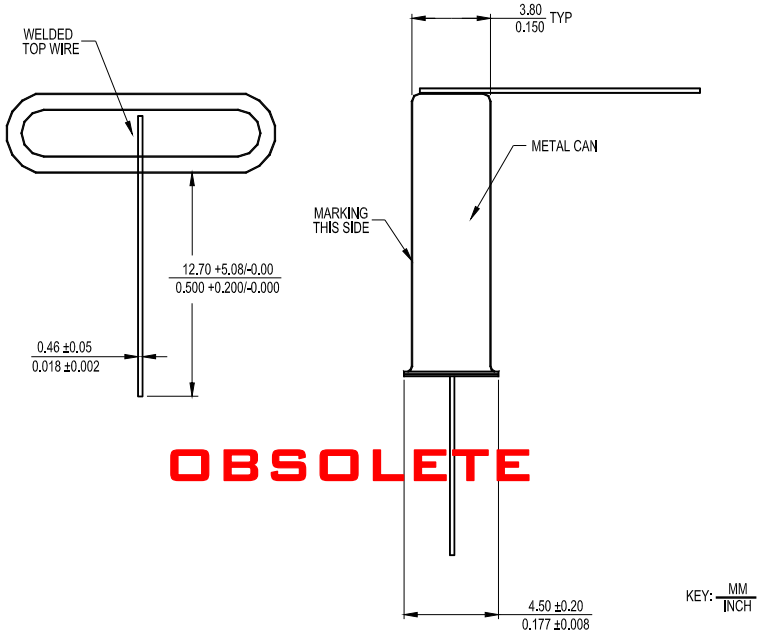

MARKING INFORMATION

1. MPXXXX - CTS Part Number.
   [Per Ordering Information Format]
2. XXMXXXXXX – Frequency is marked with only leading significant digits before the 'M' and 4 – 6 digits after the 'M' (including zeros).
   Ex. XMXXXXXX – 3M579545
   XXMXXXXX – 14M31818
   XXMXXXX – 20M0000
2. ** - Manufacturing Site Code.
3. YYWW – Date Code, YY – year, WW – week.
4. Complete CTS part number, frequency value and date code information must appear on bag and box labels.

NOTES

1. Lead finish (e1), SnAgCu.

MECHANICAL SPECIFICATIONS

MP-SMMC OPTION W/ METAL CLIP THIRD LEAD

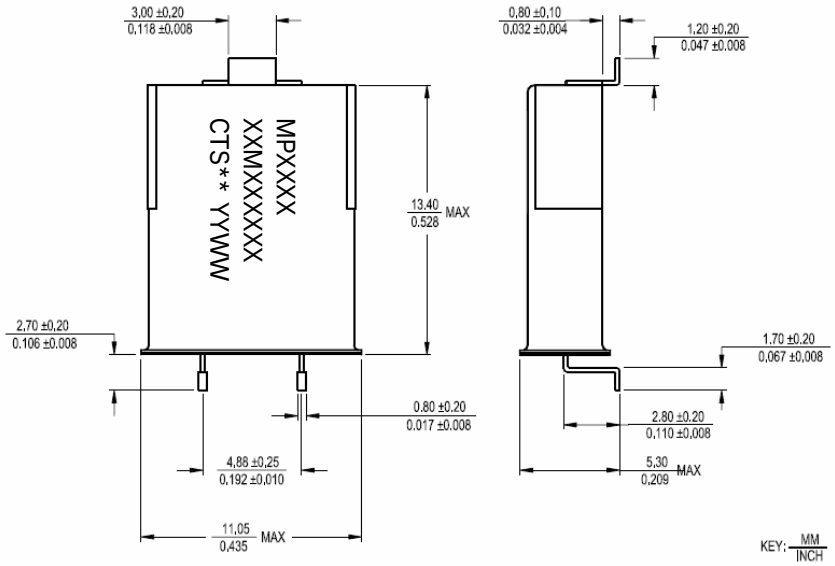

SUGGESTED SOLDER PAD GEOMETRY

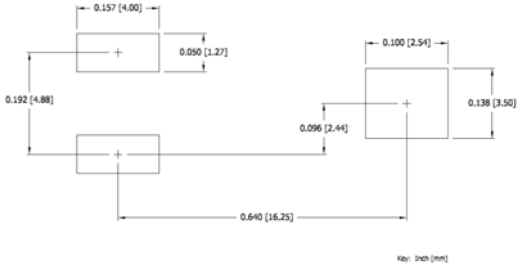

MP-SM OPTION W/ WELDED TOP WIRE THIRD LEAD

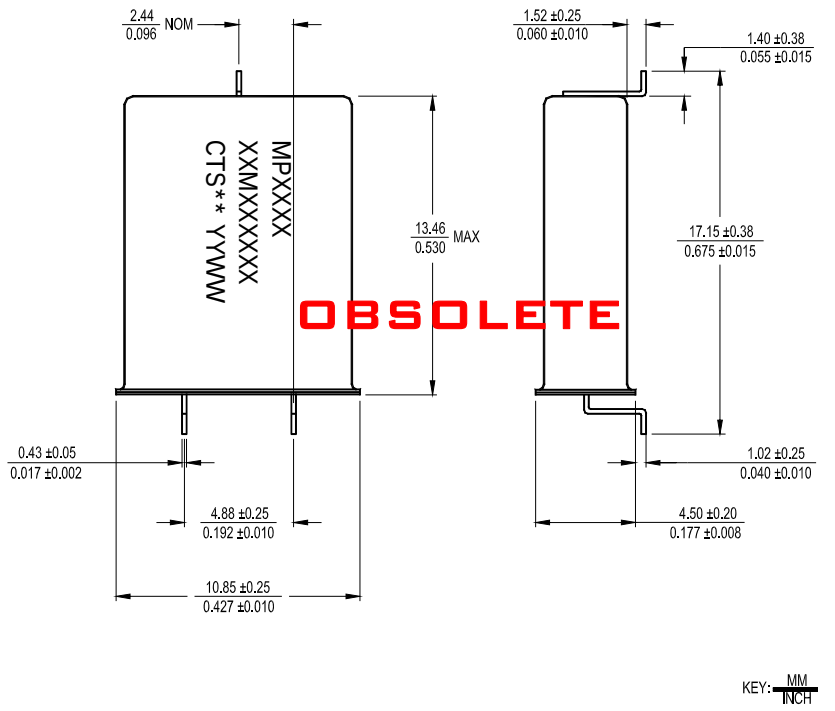

SUGGESTED SOLDER PAD GEOMETRY

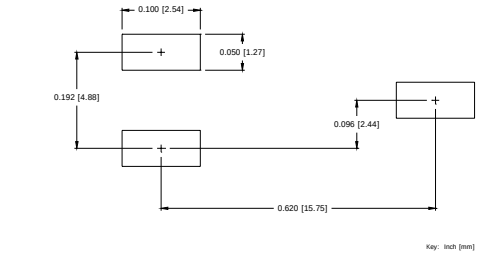

PACKAGING INFORMATION [Reference Only]

MP Radial Taping (Ammopak)

DIMENSIONS IN MILLIMETERS

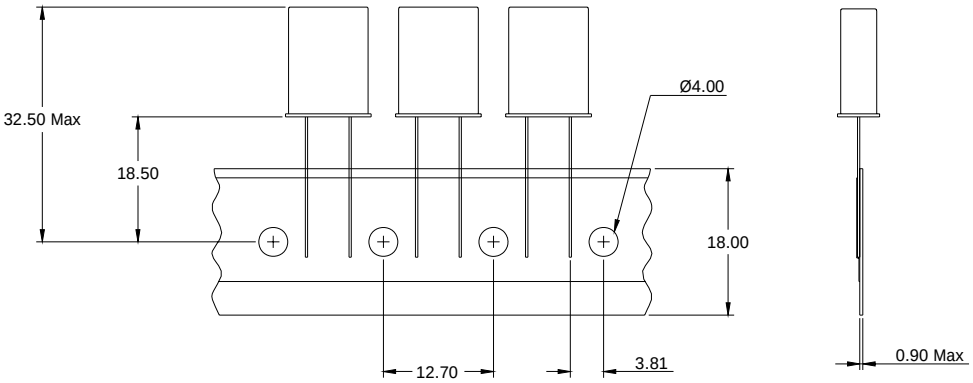

MP-SMMC Tape and Reel

DIMENSIONS IN MILLIMETERS

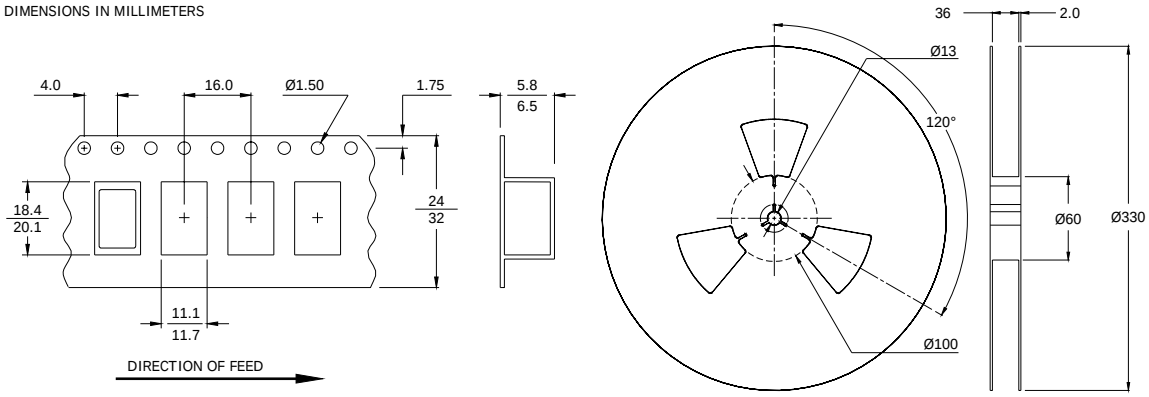

ENVIRONMENTAL SPECIFICATIONS

Temperature Cycle:	400 cycles from –55°C to +125°C, 10 minute dwell at each temperature, 1 minute transfer time between temperatures.
Mechanical Shock:	1,500g's, 0.5mS duration, ½ sinewave, 3 shocks each direction along 3 mutually perpendicular planes (18 total shocks).
Sinusoidal Vibration:	0.06 inches double amplitude, 10 to 55 Hz and 20g's, 55 to 2,000 Hz, 3 cycles each in 3 mutually perpendicular planes (9 times total).
Gross Leak:	No leak shall appear while immersed in an FC40 or equivalent liquid at +125°C for 20 seconds.
Fine Leak:	Mass spectrometer leak rates less than $2x10^{-8}$ ATM cc/sec air equivalent.
Resistance to Solder Heat:	Product must survive 3 reflows of +250°C maximum, 10 seconds maximum.
High Temperature Operating Bias:	2,000 hours at +125°C, disregarding frequency shift.
Frequency Aging:	1,000 hours at +85°C, maximum ±5 ppm shift.
Insulation Resistance:	500M Ohms @ $100V_{DC}$ $\pm 15V_{DC}$.
Moisture Sensitivity Level:	Level 1 per JEDEC J-STD-020.

OCEAN CHIPS
Океан Электроники
Поставка электронных компонентов

Компания «Океан Электроники» предлагает заключение долгосрочных отношений при поставках импортных электронных компонентов на взаимовыгодных условиях!

Наши преимущества:

- Поставка оригинальных импортных электронных компонентов напрямую с производств Америки, Европы и Азии, а так же с крупнейших складов мира;
- Широкая линейка поставок активных и пассивных импортных электронных компонентов (более 30 млн. наименований);
- Поставка сложных, дефицитных, либо снятых с производства позиций;
- Оперативные сроки поставки под заказ (от 5 рабочих дней);
- Экспресс доставка в любую точку России;
- Помощь Конструкторского Отдела и консультации квалифицированных инженеров;
- Техническая поддержка проекта, помощь в подборе аналогов, поставка прототипов;
- Поставка электронных компонентов под контролем ВП;
- Система менеджмента качества сертифицирована по Международному стандарту ISO 9001;
- При необходимости вся продукция военного и аэрокосмического назначения проходит испытания и сертификацию в лаборатории (по согласованию с заказчиком);
- Поставка специализированных компонентов военного и аэрокосмического уровня качества (Xilinx, Altera, Analog Devices, Intersil, Interpoint, Microsemi, Actel, Aeroflex, Peregrine, VPT, Syfer, Eurofarad, Texas Instruments, MS Kennedy, Miteq, Cobham, E2V, MA-COM, Hittite, Mini-Circuits, General Dynamics и др.);

Компания «Океан Электроники» является официальным дистрибьютором и эксклюзивным представителем в России одного из крупнейших производителей разъемов военного и аэрокосмического назначения **«JONHON»**, а так же официальным дистрибьютором и эксклюзивным представителем в России производителя высокотехнологичных и надежных решений для передачи СВЧ сигналов **«FORSTAR»**.

AVIC JONHON

«JONHON» (основан в 1970 г.)

Разъемы специального, военного и аэрокосмического назначения:

(Применяются в военной, авиационной, аэрокосмической, морской, железнодорожной, горно- и нефтедобывающей отраслях промышленности)

«FORSTAR» (основан в 1998 г.)

ВЧ соединители, коаксиальные кабели, кабельные сборки и микроволновые компоненты:

(Применяются в телекоммуникациях гражданского и специального назначения, в средствах связи, РЛС, а так же военной, авиационной и аэрокосмической отраслях промышленности).

FORSTAR®

Телефон: 8 (812) 309-75-97 (многоканальный)
Факс: 8 (812) 320-03-32
Электронная почта: ocean@oceanchips.ru
Web: http://oceanchips.ru/
Адрес: 198099, г. Санкт-Петербург, ул. Калинина, д. 2, корп. 4, лит. А