RX62N Group, RX621 Group

Renesas MCUs

R01DS0052EJ0140
Rev.1.40
2014.07.16

100 MHz 32-bit RX MCU with FPU, 165 DMIPS, up to 512-Kbyte Flash, Ethernet, USB 2.0 Full-Speed Host/Function/OTG, CAN, 12-bit ADC, TFT-LCD, RTC, up to 14 communication channels

Features

■ 32-bit RX CPU Core

- Delivers 165 DMIPS at a maximum operating frequency of 100 MHz
- Single Precision 32-bit IEEE-754 Floating Point
- Accumulator: 32 × 32 to 64-bit result, one instruction
- Mult/Divide Unit, 32 × 32 Multiply in one CPU clock for multiple instructions
- Interrupt response in as few as 5 CPU clock cycles
- CISC-Harvard Architecture with 5-stage pipeline
- Variable length instructions, ultra compact code
- Supports the Memory Protection Unit (MPU)
- Background JTAG debug plus high-speed trace

■ Low Power Design and Architecture

- 2.7V to 3.6V operation from a single supply
- 480 µA/MHz Run Mode with all peripherals on
- Deep Software Standby Mode with RTC
- Four low power modes

■ Main Flash Memory, no Wait-State

- 100 MHz operation, 10 nsec read cycle
- No wait states for read at full CPU speed
- 256K, 384K, 512K Byte size options
- For Instructions or Operands
- Programming from USB, SCI, JTAG, user code

■ Data Flash Memory

- Up to 32K Bytes with 30K Erase Cycles
- Background Erase/Program does not stall CPU

■ SRAM, no Wait-State

- 64K or 96K Byte size options
- For Operands or Instructions
- Back-up retention in Deep Software Standby Mode

■ DMA

- Four fully programmable internal DMA channels
- Two EXDMA channels for external-to-external transfers
- Data Transfer Controller (DTC)

■ Reset and Supply Management

- Power-On Reset (POR) monitor/generator
- Low Voltage Detect (LVD) with precision setting

■ System Clocking with Clock Monitoring

- External crystal, 8 MHz to 14 MHz to Internal PLL
- PLL source to system, USB, and Ethernet
- Internal 125 kHz LOCO for IWDT
- External crystal, 32 kHz for RTC

■ Real Time Clock

- Full calendar function, BCD format

■ Two Independent Watchdog Timers

- 125-kHz LOCO operation

TFLGA85 7 × 7 mm, 0.65 mm pitch
TFLGA145 9 × 9 mm, 0.65 mm pitch
LFBGA176 13 × 13 mm, 0.8 mm pitch

LQFP100 14 × 14 mm, 0. 5mm pitch
LQFP144 20 × 20 mm, 0.5 mm pitch

■ Up to 14 Communication Interfaces

- USB 2.0 Full-Speed interfaces with PHY (2 ch)
  Supports Host/Function/OTG
  10 endpoints for types: Control, Interrupt, Bulk, Isochronous
- Ethernet MAC 10/100 Mbps, Half or Full Duplex Supported. (1 ch)
  Dedicated DMA with 2-Kbyte transmit and receive FIFOs.
  RMII or MII interface to external PHY
- CAN ISO11898-1, supports 32 mailboxes (1 ch)
- SCI channels: Asynchronous, clock sync, smartcard, and 9-bit modes (6 ch)
- I^2C interfaces up to 1 M bps, SMBus support (2 ch)
- RSPI (2 ch)

■ External Address Space

- Eight CS areas (8 × 16 Mbytes)
- 128-Mbyte SDRAM area
- 8-/16-/32-bit bus space selectable for each area

■ TFT-LCD up to WQVGA resolution

■ Up to 20 Extended Function Timers

- 16-bit MTU2
  Input capture, Output Compare, PWM output, phase count mode (12 ch)
- 8-bit TMR (4 ch)
- 16-bit CMT (4 ch)

■ 1-MHz ADC units with two combination choices

- 12-bit × 8 ch. unit with single sample/hold circuit
- or (2) 10-bit × 4 ch units each with a sample/hold circuit
- AD-converted value addition mode (12-bit A/D converter)

■ 10-bit DAC, 2 channels

■ Up to 128 GPIO

- 5 V tolerant, Open-Drain, Internal Pull-up

■ Operation Temp

- –40°C to +85°C

1. Overview

1.1 Outline of Specifications

Table 1.1 lists the specifications in outline, and Table 1.2 lists the functions of products.

Table 1.1 Outline of Specifications (1 / 4)

Classification	Module/Function	Description
CPU	CPU	・Maximum operating frequency: 100 MHz ・32-bit RX CPU ・Minimum instruction execution time: One instruction per state (cycle of the system clock) ・Address space: 4-Gbyte linear ・Register set of the CPU General purpose: Sixteen 32-bit registers Control: Nine 32-bit registers Accumulator: One 64-bit register ・Basic instructions: 73 ・Floating-point instructions: 8 ・DSP instructions: 9 ・Addressing modes: 10 ・Data arrangement Instructions: Little endian Data: Selectable as little endian or big endian ・On-chip 32-bit multiplier: 32 x 32 → 64 bits ・On-chip divider: 32 / 32 → 32 bits ・Barrel shifter: 32 bits ・Memory-protection unit (MPU)
	FPU	・Single precision (32-bit) floating point ・Data types and floating-point exceptions in conformance with the IEEE754 standard
Memory	ROM	・ROM capacity: 512 Kbytes (max.) ・Two on-board programming modes Boot mode (The user MAT is programmable via the SCI and USB.) User program mode ・Parallel programmer mode (for off-board programming)
	RAM	RAM capacity: 96 Kbytes (max.)
	Data flash	Data flash capacity: 32 Kbytes
MCU operating modes		・Single-chip mode, on-chip ROM enabled expansion mode, and on-chip ROM disabled expansion mode (software switching)
Clock	Clock generation circuit	・Two circuits: Main clock oscillator and subclock oscillator ・Internal oscillator: Low-speed on-chip oscillator ・Structure of a PLL frequency synthesizer and frequency divider for selectable operating frequency ・Oscillation stoppage detection ・Independent frequency-division and multiplication settings for the system clock (ICLK), peripheral module clock (PCLK), and external bus clock (BCLK) The CPU and other bus masters run in synchronization with the system clock (ICLK): 8 to 100 MHz Peripheral modules run in synchronization with the peripheral module clock (PCLK): 8 to 50 MHz ・Devices connected to the external bus run in synchronization with the external bus clock (BCLK pin): 8 to 50 MHz*1
Reset		・Pin reset, power-on reset, voltage-monitoring reset, watchdog timer reset, independent watchdog timer reset, and deep software standby reset
Voltage detection circuit		・When the voltage on VCC falls below the voltage detection level (Vdet), an internal reset or internal interrupt is generated.
Low power consumption	Low power consumption facilities	・Module stop function ・Four low power consumption modes Sleep mode, all-module clock stop mode, software standby mode, and deep software standby mode

Table 1.1 Outline of Specifications (2 / 4)

Classification	Module/Function	Description
Interrupt	Interrupt control unit	・Peripheral function interrupts: 146 sources ・External interrupts: 16 (pins IRQ0 to IRQ15) ・Non-maskable interrupts: 3 (the NMI pin, oscillation stop detection interrupt, and voltage-monitoring interrupt) ・Sixteen levels specifiable for the order of priority
	User break controller (as an optional function)	・Two breakpoint channels ・Address breaks in fetch cycles are specifiable (enabling ROM correction)
External bus extension		・The external address space can be divided into nine areas (CS0 to CS7, SDCS), each with independent control of access settings. Capacity of each area: 16 Mbytes (CS0 to CS7), 128 Mbytes (SDCS) A chip-select signal (CS0# to CS7#, SDCS#) can be output for each area. Each area is specifiable as an 8-, 16-, or 32-bit bus space (however, only 176-pin versions support 32-bit bus spaces). The data arrangement in each area is selectable as little or big endian (only for data). ・SDRAM interface connectable ・Bus format: Separate buses ・Wait control ・Write buffer facility
DMA	DMA controller	・4 channels ・Three transfer modes: Normal transfer, repeat transfer, and block transfer ・Activation sources: Software trigger, external interrupts, and interrupt requests from peripheral functions
	EXDMA controller	・2 channels ・Four transfer modes: Normal transfer, repeat transfer, block transfer, and cluster transfer ・Single-address transfer enabled with the EDACK signal ・Capable of direct data transfer to TFT LCD panels ・Activation sources: Software trigger, external DMA transfer requests (EDREQ), and interrupt requests from peripheral functions
	Data transfer controller	・Three transfer modes: Normal transfer, repeat transfer, and block transfer ・Activation sources: Software trigger, external interrupts and interrupt requests from peripheral functions
I/O ports	Programmable I/O ports	・I/O ports for the 176-pin LFBGA/145-pin TFLGA/144-pin LQFP/100-pin LQFP/85-pin TFLGA ・I/O pins: 126/103/103/72/58 ・Input pins: 2/2/2/2/2 ・Pull-up resistors: 56/44/44/40/28 ・Open-drain outputs: 35/33/33/27/23 ・5-V tolerance: 11/11/11/7/6
Timers	Multi-function timer pulse unit	・(16 bits x 6 channels) x 2 units ・Time bases for the 12 16-bit timer channels can be provided via up to 32 pulse-input/output lines and six pulse-input lines ・Select from among eight counter-input clock signals for each channel (PCLK/1, PCLK/4, PCLK/16, PCLK/64, MTCLKA, MTCLKB, MTCLKC, MTCLKD) other than channel 5, for which only four signals are available. ・Input capture function ・21 output compare/input capture registers ・Pulse output mode ・Complementary PWM output mode ・Reset synchronous PWM mode ・Phase-counting mode ・Generation of triggers for A/D converter conversion
	Port output enable	・Controls the high-impedance state of the MTU's waveform output pins

Table 1.1 Outline of Specifications (3 / 4)

Classification	Module/Function	Description
Timers	Programmable pulse generator	・(4 bits x 4 groups) x 2 units ・Pulse output with the MTU output as a trigger ・Maximum of 32-bit pulse output possible
	8-bit timers	・(8 bits x 2 channels) x 2 units ・Select from among seven internal clock signals (PCLK, PCLK/2, PCLK/8, PCLK/32, PCLK/64, PCLK/1024, PCLK/8192) and one external clock signal ・Capable of output of pulse trains with desired duty cycles or of PWM signals ・The 2 channels of each unit can be cascaded to create a 16-bit timer ・Generation of triggers for A/D converter conversion ・Capable of generating baud-rate clocks for SCI5 and SCI6
	Compare match timer	・(16 bits x 2 channels) x 2 units ・Select from among four internal clock signals (PCLK/8, PCLK/32, PCLK/128, PCLK/512)
	Watchdog timer	・8 bits x 1 channel ・Select from among eight counter-input clock signals (PCLK/4, PCLK/64, PCLK/128, PCLK/512, PCLK/2048, PCLK/8192, PCLK/32768, PCLK/131072) ・Switchable between watchdog timer mode and interval timer mode
	Independent watchdog timer	・14 bits x 1 channel ・Counter-input clock: Dedicated on-chip oscillator
Realtime clock		・Clock source: Subclock ・Time/calendar Interrupt sources: Alarm interrupt, periodic interrupt, and carry interrupt
Communication function	Ethernet controller	・Input and output of Ethernet/IEEE 802.3 frames ・Transfer at 10 or 100 Mbps ・Full- and half-duplex modes ・MII (Media Independent Interface) or RMII (Reduced Media Independent Interface) as defined in IEEE 802.3u ・Detection of Magic Packets™* or output of a "wake-on-LAN" signal (WOL) ・Compliance with flow control as defined in IEEE 802.3x standards Note: * Magic Packet™ is a registered trademark of Advanced Micro Devices, Inc.
	DMA controller for Ethernet controller	・Alleviation of CPU loads by the descriptor control method ・Transmission FIFO: 2 Kbytes; Reception FIFO: 2 Kbytes
	USB 2.0 host/ function module	・Includes a UDC (USB Device Controller) and transceiver for USB 2.0 ・Single port (176-pin products: two ports) ・Compliance with the USB 2.0 specification ・Transfer rate: Full speed (12 Mbps) ・Self-power mode and bus power are selectable ・OTG (On the Go) operation is possible ・Incorporates 2 Kbytes of RAM as a transfer buffer
	Serial communications interfaces	・6 channels ・Serial communications modes: Asynchronous, clock synchronous, and smart-card interface ・Multi-processor communications function ・On-chip baud rate generator allows selection of the desired bit rate ・Choice of LSB-first or MSB-first transfer ・Average transfer rate clock can be input from TMR timers for SCI5 and SCI6

Table 1.1 Outline of Specifications (4 / 4)

Classification	Module/Function	Description
Communication function	I^2C bus interfaces	・ 2 channels (100-pin version: 1 channel) ・ Communications formats I^2C bus format/SMBus format Master/slave selectable (For multi-master operation)
	CAN module	・ 1 channel ・ 32 mailboxes
	Serial peripheral interfaces	・ 2 channels ・ RSPI transfer facility Using the MOSI (master out, slave in), MISO (master in, slave out), SSL (slave select), and RSPI clock (RSPCK) signals enables serial transfer through SPI operation (four lines) or clock-synchronous operation (three lines) Capable of handling serial transfer as a master or slave ・ Data formats Switching between MSB first and LSB first The number of bits in each transfer can be changed to any number of bits from 8 to 16, or to 20, 24, or 32 bits. 128-bit buffers for transmission and reception Up to four frames can be transmitted or received in a single transfer operation (with each frame having up to 32 bits) ・ Buffered structure ・ Double buffers for both transmission and reception ・ Max. transfer rate In master mode: 18 Mbps In slave mode: 6.25 Mbps
12-bit A/D converter 10-bit A/D converter		・ 12 bits x 1 unit (1 unit x 8 channels) or 10 bits x 2 units (2 units x 4 channels); 12- and 10-bit A/D converters can be exclusively used. ・ 10- or 12-bit resolution ・ Conversion time: 1.0 μs per channel (in operation with PCLK at 50 MHz) ・ Two operating modes Single mode Scan mode (one-cycle scan mode or continuous scan mode) ・ Sample-and-hold function ・ Three ways to start A/D conversion Conversion can be started by software, a conversion start trigger from a timer (MTU or TMR), or an external trigger signal. ・ Self-diagnostic functions
D/A converter		・ 2 channels (1 channel for 100-pin products) ・ 10-bit resolution ・ Output voltage: 0 V to VREFH
CRC calculator		・ CRC code generation for arbitrary amounts of data in 8-bit units ・ Select any of three generating polynomials: $X^8 + X^2 + X + 1$, $X^{16} + X^{15} + X^2 + 1$, or $X^{16} + X^{12} + X^5 + 1$. ・ Generation of CRC codes for use with LSB-first or MSB-first communications is selectable.
Operating frequency		8 to 100 MHz
Power supply voltage		VCC = PLLVCC = AVCC = 2.7 to 3.6V, VREFH = 2.7 to AVCC
Operating temperature		–40 to +85°C
Package		176-pin LFBGA (PLBG0176GA-A), 145-pin TFLGA (PTLG0145JB-A), 144-pin LQFP (PLQP0144KA-A), 100-pin LQFP (PLQP0100KB-A)*2 85-pin TFLGA (PTLG0085JA-A)*2,*3

Note 1. For products in the 100-pin LQFP and 85-pin TFLGA, the synchronizing frequency is 8 to 25 MHz.
Note 2. The 100-pin LQFP and 85-pin TFLGA do not support the SDRAM area controller and EXDMA controller.
Note 3. The 85-pin TFLGA does not support the port-output enabling.

Table 1.2 Functions of RX62N Group and RX621 Group Products

Functions		RX62N Group								RX621 Group				
		R5F562NxBxxx*				R5F562NxAxxx*				R5F5621xBxxx*				
Package		176-pin LFBGA	145-pin TFLGA	144-pin LQFP	100-pin LQFP	176-pin LFBGA	145-pin TFLGA	144-pin LQFP	100-pin LQFP	176-pin LFBGA	145-pin TFLGA	144-pin LQFP	100-pin LQFP	85-pin TFLGA
External bus	SDRAM area controller	O			—	O			—	O			—	
DMA	DMA controller	O				O				O				
	EXDMA controller	O			—	O			—	O			—	
	Data transfer controller	O				O				O				
Timers	Multi-function timer pulse unit	O				O				O				
	Port output enable	O				O				O				—
	Programmable pulse generator	O				O				O				
	8-bit timers	O				O				O				
	Compare match timer	O				O				O				
	Realtime clock	O				O				O				
	Watchdog timer	O				O				O				
	Independent watchdog timer	O				O				O				
Communication function	Ethernet controller/ DMA controller for Ethernet controller	O				O				—				
	USB 2.0 host/function module	O				O				O				
	Serial communications interfaces	O				O				O				
	I^2C bus interfaces	O				O				O				
	CAN module	O				—				O				
	Serial peripheral interfaces	O				O				O				
A/D converter		O				O				O				
D/A converter		O				O				O				
CRC calculator		O				O				O				

[Legend]
O: Supported, —: Not supported
Note: * For details on part numbers, see Table 1.3.

1.2 List of Products

Table 1.3 is a list of products, and Figure 1.1 shows how to read the product part no.

Table 1.3 List of Products

Group	Part No.	Package	ROM Capacity	RAM Capacity	Data Flash	Operating Frequency (Max.)
RX62N	R5F562N8BDBG	PLBG0176GA-A	512 Kbytes	96 Kbytes	32 Kbytes	100 MHz
	R5F562N8BDLE	PTLG0145JB-A	512 Kbytes	96 Kbytes	32 Kbytes	100 MHz
	R5F562N8BDFB	PLQP0144KA-A	512 Kbytes	96 Kbytes	32 Kbytes	100 MHz
	R5F562N8BDFP	PLQP0100KB-A	512 Kbytes	96 Kbytes	32 Kbytes	100 MHz
	R5F562N7BDBG	PLBG0176GA-A	384 Kbytes	64 Kbytes	32 Kbytes	100 MHz
	R5F562N7BDLE	PTLG0145JB-A	384 Kbytes	64 Kbytes	32 Kbytes	100 MHz
	R5F562N7BDFB	PLQP0144KA-A	384 Kbytes	64 Kbytes	32 Kbytes	100 MHz
	R5F562N7BDFP	PLQP0100KB-A	384 Kbytes	64 Kbytes	32 Kbytes	100 MHz
	R5F562N8ADBG	PLBG0176GA-A	512 Kbytes	96 Kbytes	32 Kbytes	100 MHz
	R5F562N8ADLE	PTLG0145JB-A	512 Kbytes	96 Kbytes	32 Kbytes	100 MHz
	R5F562N8ADFB	PLQP0144KA-A	512 Kbytes	96 Kbytes	32 Kbytes	100 MHz
	R5F562N8ADFP	PLQP0100KB-A	512 Kbytes	96 Kbytes	32 Kbytes	100 MHz
	R5F562N7ADBG	PLBG0176GA-A	384 Kbytes	64 Kbytes	32 Kbytes	100 MHz
	R5F562N7ADLE	PTLG0145JB-A	384 Kbytes	64 Kbytes	32 Kbytes	100 MHz
	R5F562N7ADFB	PLQP0144KA-A	384 Kbytes	64 Kbytes	32 Kbytes	100 MHz
	R5F562N7ADFP	PLQP0100KB-A	384 Kbytes	64 Kbytes	32 Kbytes	100 MHz
RX621	R5F56218BDBG	PLBG0176GA-A	512 Kbytes	96 Kbytes	32 Kbytes	100 MHz
	R5F56218BDLE	PTLG0145JB-A	512 Kbytes	96 Kbytes	32 Kbytes	100 MHz
	R5F56218BDFB	PLQP0144KA-A	512 Kbytes	96 Kbytes	32 Kbytes	100 MHz
	R5F56218BDFP	PLQP0100KB-A	512 Kbytes	96 Kbytes	32 Kbytes	100 MHz
	R5F56218BDLD	PTLG0085JA-A	512 Kbytes	96 Kbytes	32 Kbytes	100 MHz
	R5F56217BDBG	PLBG0176GA-A	384 Kbytes	64 Kbytes	32 Kbytes	100 MHz
	R5F56217BDLE	PTLG0145JB-A	384 Kbytes	64 Kbytes	32 Kbytes	100 MHz
	R5F56217BDFB	PLQP0144KA-A	384 Kbytes	64 Kbytes	32 Kbytes	100 MHz
	R5F56217BDFP	PLQP0100KB-A	384 Kbytes	64 Kbytes	32 Kbytes	100 MHz
	R5F56217BDLD	PTLG0085JA-A	384 Kbytes	64 Kbytes	32 Kbytes	100 MHz
	R5F56216BDBG	PLBG0176GA-A	256 Kbytes	64 Kbytes	32 Kbytes	100 MHz
	R5F56216BDLE	PTLG0145JB-A	256 Kbytes	64 Kbytes	32 Kbytes	100 MHz
	R5F56216BDFB	PLQP0144KA-A	256 Kbytes	64 Kbytes	32 Kbytes	100 MHz
	R5F56216BDFP	PLQP0100KB-A	256 Kbytes	64 Kbytes	32 Kbytes	100 MHz
	R5F56216BDLD	PTLG0085JA-A	256 Kbytes	64 Kbytes	32 Kbytes	100 MHz

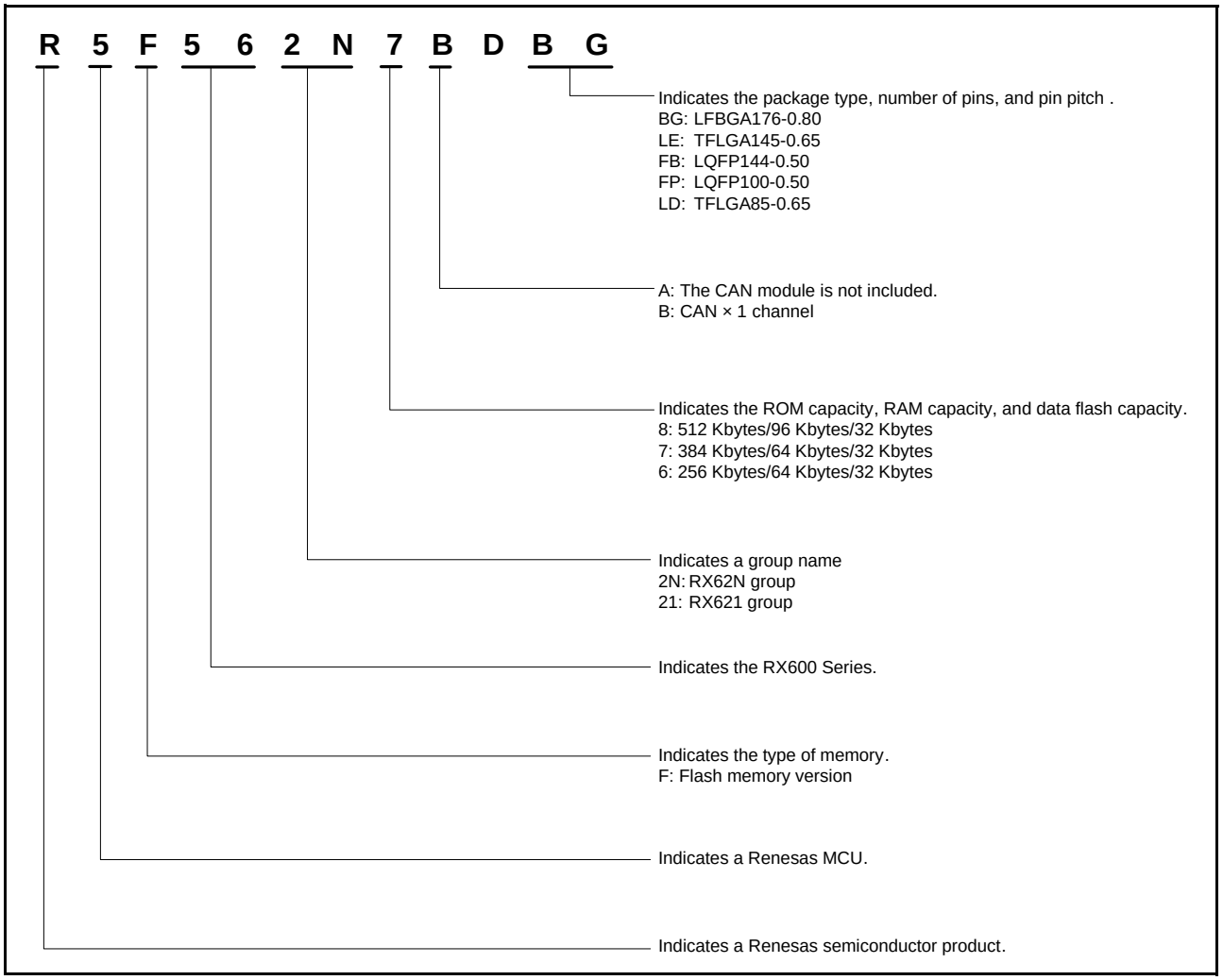

Figure 1.1 How to Read the Product Part No.

1.3 Block Diagram

Figure 1.2 shows a block diagram.

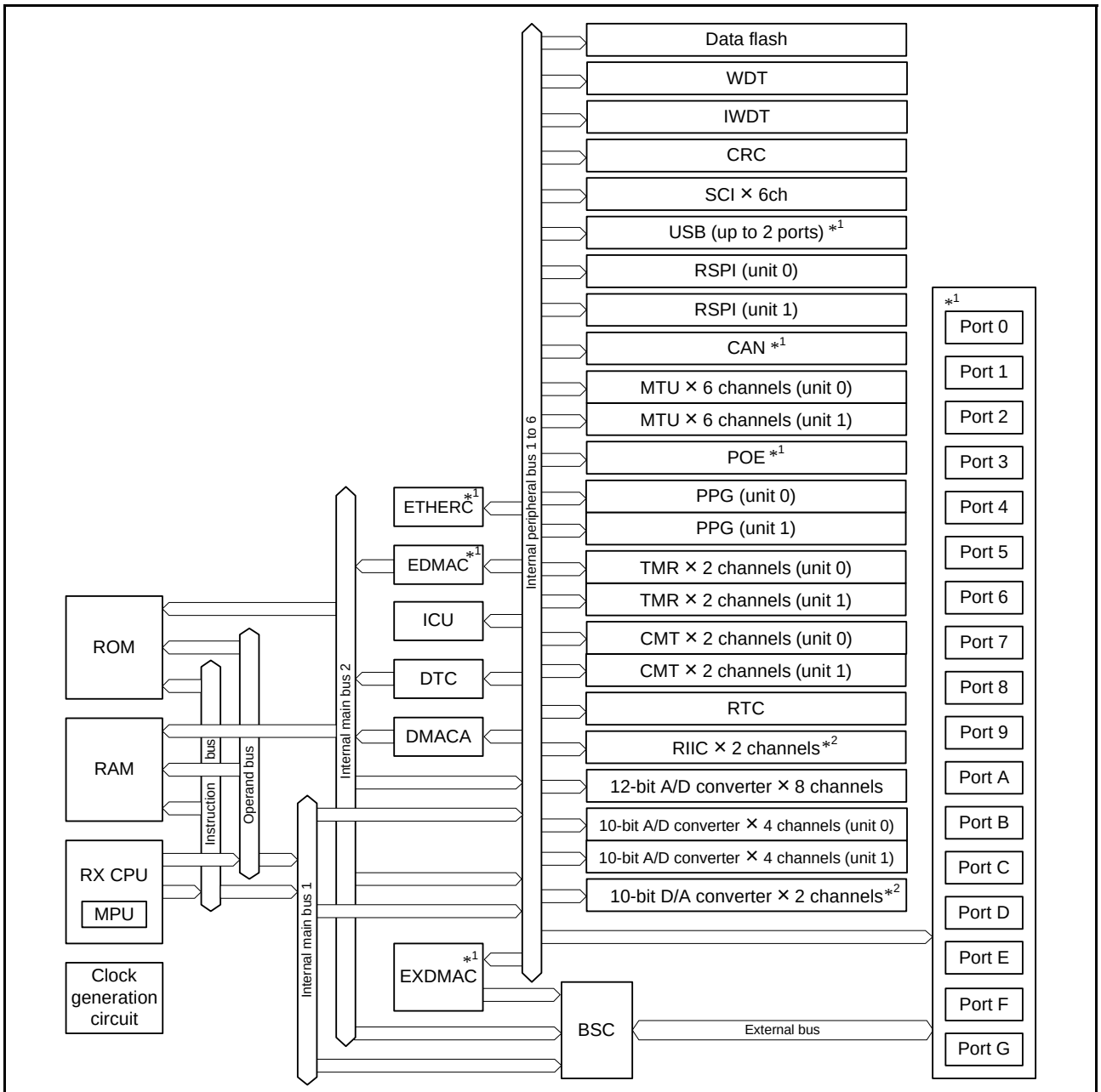

Note1. The installation of the EXDMAC, EtherC, EDMAC, USB, CAN module, POE, and ports 0 to G is different depending on the product group and package.
Note2. The number of RIIC units and 10-bit D/A converter channels that are incorporated differs with the package.

ETHERC:	Ethernet controller	SCI:	Serial communications interfaces
EDMAC:	DMA controller for Ethernet controller	USB:	USB 2.0 host/function module
ICU:	Interrupt control unit	RSPI:	Serial peripheral interfaces
DTC:	Data transfer controller	CAN:	CAN module
DMACA:	DMA controller	MTU:	Multi-function timer pulse unit
EXDMAC:	EXDMA controller	POE:	Port output enable
BSC:	Bus controller	PPG:	Programmable pulse generator
WDT:	Watchdog timer	TMR:	8-bit timer
IWDT:	Independent watchdog timer	CMT:	Compare match timer
CRC:	CRC (Cyclic Redundancy Check) calculator	RTC:	Realtime clock
MPU:	Memory-protection unit	RIIC:	I^2C bus interface

Figure 1.2 Block Diagram

1.4 Pin Assignments

Figure 1.3 to Figure 1.9 show the pins assignments. Table 1.4 to Table 1.8 show the list of pins and pin functions.

	A	B	C	D	E	F	G	H	J	K	L	M	N	P	R	
15	PE1	P70	PE6	P65	P67	PG5	PA1	PA3	PA6	PB0	VCC	PB2	PB5	PB7	P75	15
14	P63	PE2	PE5	PE7	P66	PA0	PG6	PA4	PA7	P72	PB3	PB6	P73	PC1	P77	14
13	P61	P64	PE3	PE4	VCC	PG3	VCC	PA2	PA5	P71	PB4	VCC	P74	P76	P80	13
12	PD7	P62	PE0	VSS	PG2	PG4	VSS	PG7	VSS	PB1	VSS	PC0	PC2	PC4	PC7	12
11	PG0	P60	VCC	VSS								P81	PC3	P82	P83	11
10	PD4	PD6	PD5	PG1								PC6	PC5	P50	P53	10
9	PD3	P97	VCC	VSS								VSS	VCC	P84	P85	9
8	PD2	P96	P94	P95								P51	P52	VCC_USB	USB1_DP	8
7	PD0	PD1	P92	P93								P54	P10	P56	USB1_DM	7
6	P90	P91	VCC	VSS								P55	P57	VCC_USB	VSS_USB	6
5	P46	P47	P40	P43								P11	P15	P13	USB0_DP	5
4	P45	P44	P07	P41	VSS	VSS	MDE	RES#	P34	PF4	P30	VSS	P17	P14	USB0_DM	4
3	P42	VREFL	P05	VCC	BSCANP	VCL	MD0	VCC	PF3	PF0	VCC	P22	P20	P16	P12	3
2	AVCC	VREFH	P03	P01	CNVSS	WDTOVF#	MD1	P35	P32	P31	P27	P25	P23	PLLVCC	PLLVSS	2
1	AVSS	P02	P00	EMLE	XCIN	XCOUT	VSS	XTAL	EXTAL	P33	PF2	PF1	P26	P24	P21	1
	A	B	C	D	E	F	G	H	J	K	L	M	N	P	R	

RX62N Group
RX621 Group
PLBG0176GA-A
(176-pin LFBGA)
(Upper perspective view)

: NC pin

Figure 1.3 Pin Assignment of the 176-Pin LFBGA

	A	B	C	D	E	F	G	H	J	K	L	M	N	
13	P64	PE4	P70	PE6	P66	PA2	PA4	PA7	P72	PB3	PB6	VSS	P74	13
12	P62	PE1	PE3	PE7	PA0	VCC	PA6	PB1	PB5	PC0	VCC	PC1	P76	12
11	P60	PE2	PE5	VCC	P67	PA3	PA5	P71	PB4	P73	P75	PC2	PC4	11
10	PD6	PE0	P63	VSS	P65	PA1	VSS	PB0	PB2	PB7	P77	P80	PC5	10
9	PD3	VSS	P61	VCC						PC3	P81	PC6	VCC	9
8	PD0	PD5	PD7	PD4						P82	P83	P50	P51	8
7	P91	PD1	PD2	P93						PC7	P52	P55	P54	7
6	P47	P90	P92	VSS						VSS	P56	VSS_ USB	USB0_ DP	6
5	P44	P45	P46	VCC	NC					P53	VCC_ USB	P14	USB0_ DM	5
4	P42	P40	P41	P43	BSCANP	MDE	MD0	RES#	P32	P26	P12	P15	P13	4
3	VREFL	VREFH	VSS	P02	P00	WDTOVF#	MD1	VCC	P35	P31	P17	PLLVCC	PLLVSS	3
2	AVCC	P07	P05	VCC	VSS	XCOUT	VSS	P34	P27	P24	P22	P20	P16	2
1	AVSS	P03	P01	EMLE	VCL	XCIN	XTAL	EXTAL	P33	P30	P25	P23	P21	1
	A	B	C	D	E	F	G	H	J	K	L	M	N	

RX62N Group
RX621 Group
PTLG0145JB-A
(145-pin TFLGA)
(Upper perspective view)

: NC pin

Figure 1.4 Pin Assignment of the 145-Pin TFLGA

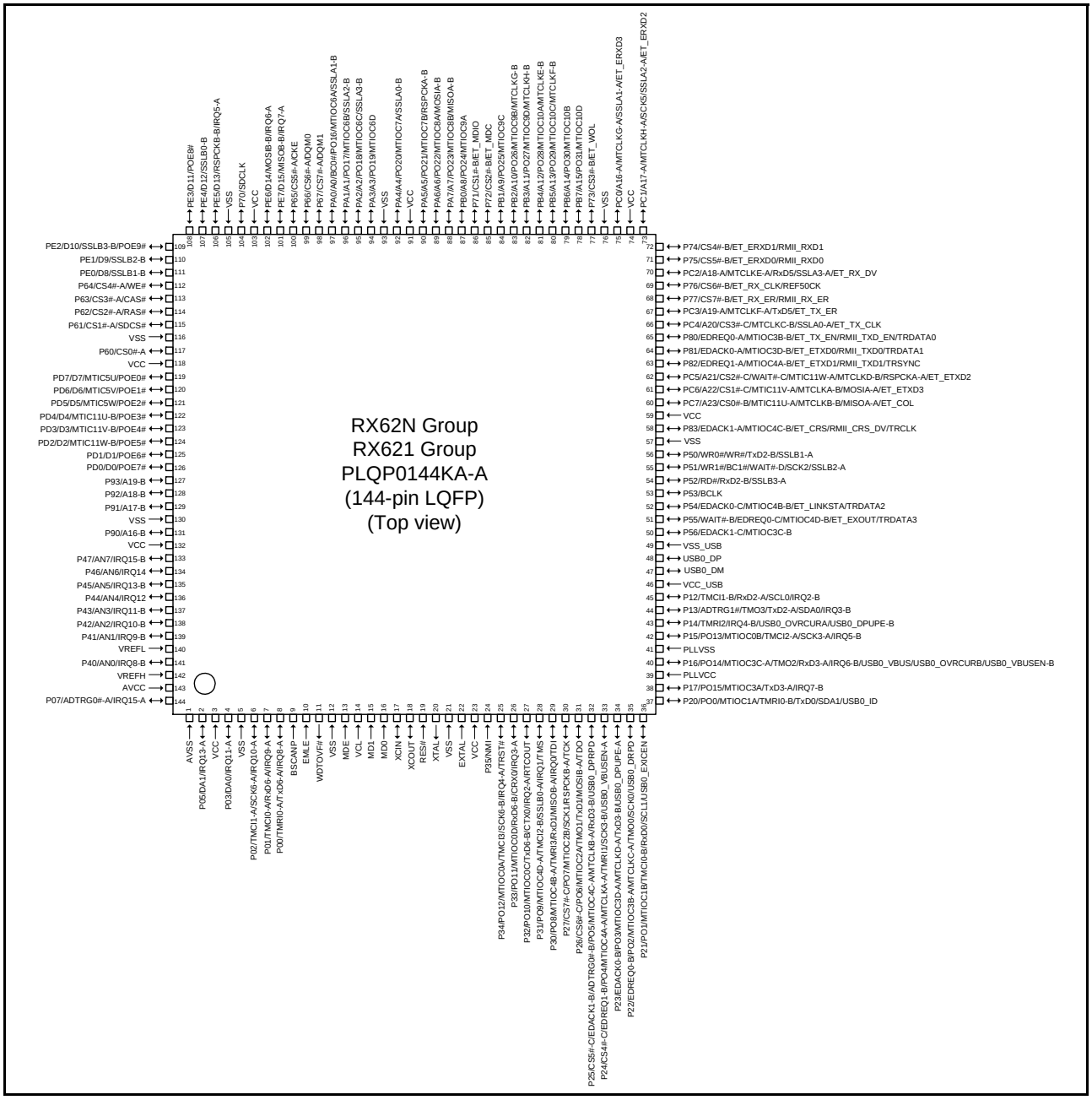

Figure 1.5 Pin Assignment of the 144-Pin LQFP

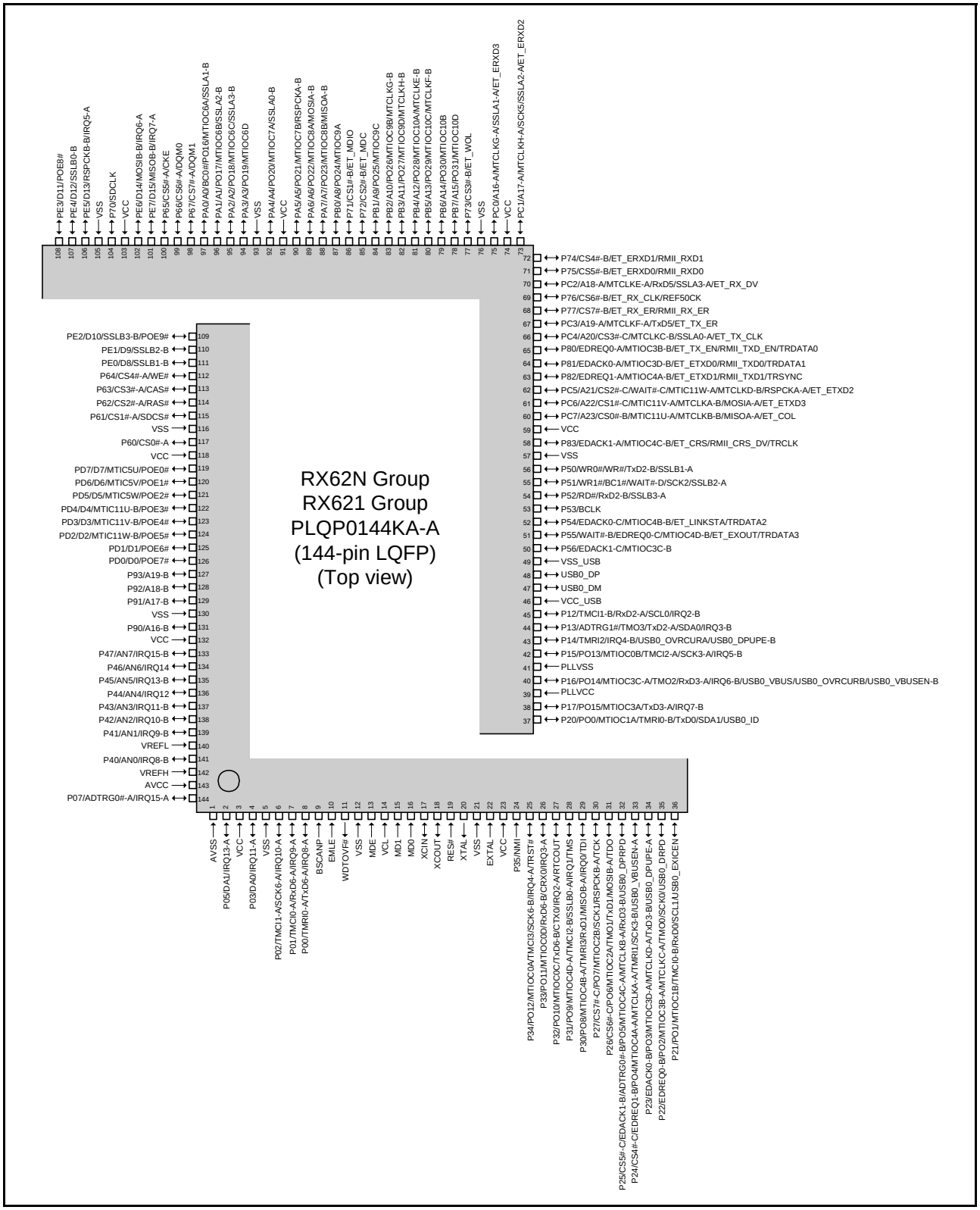

Figure 1.6 Pin Assignment of the 144-Pin LQFP (Assistance Diagram)

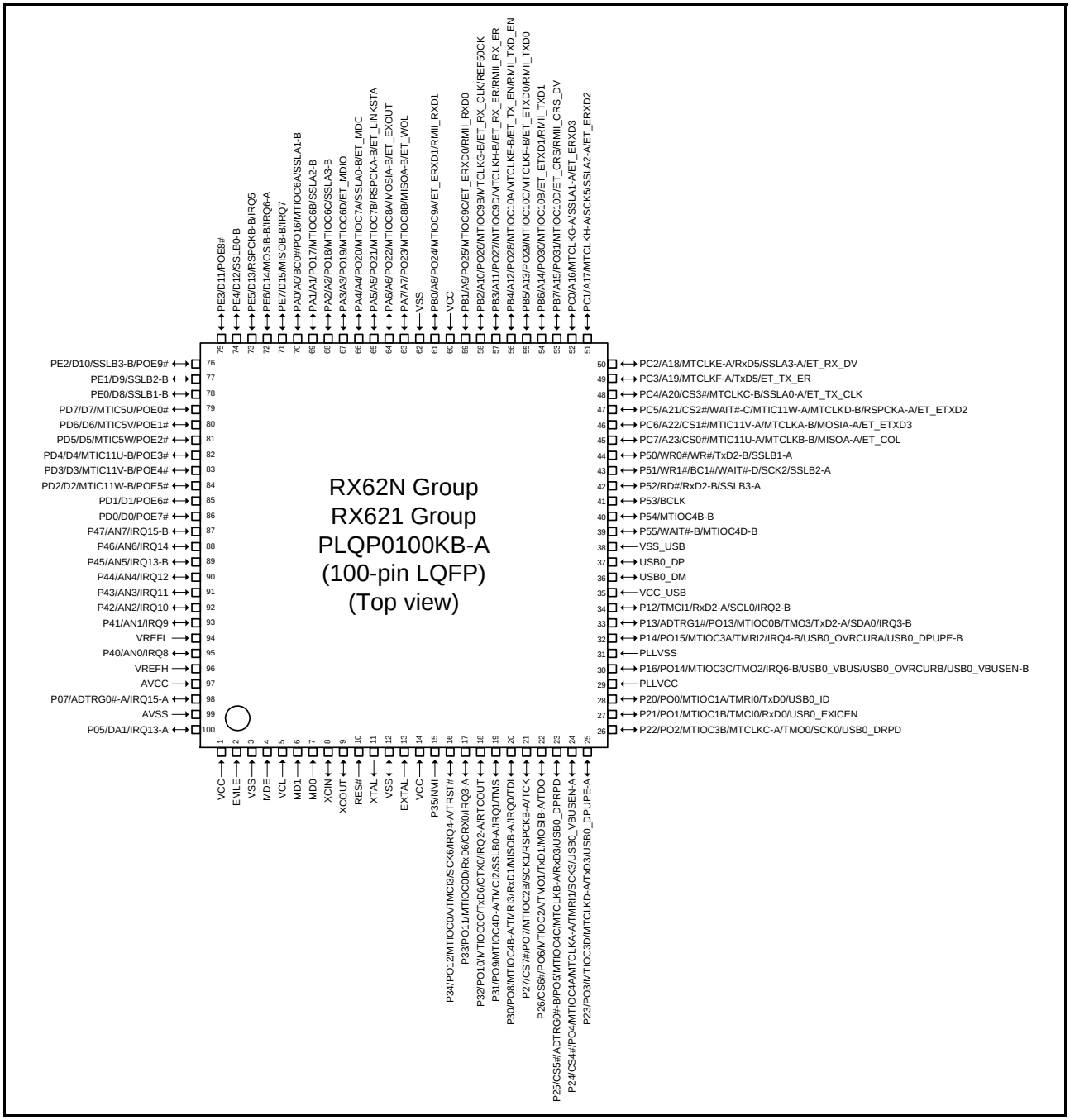

Figure 1.7 Pin Assignment of the 100-Pin LQFP

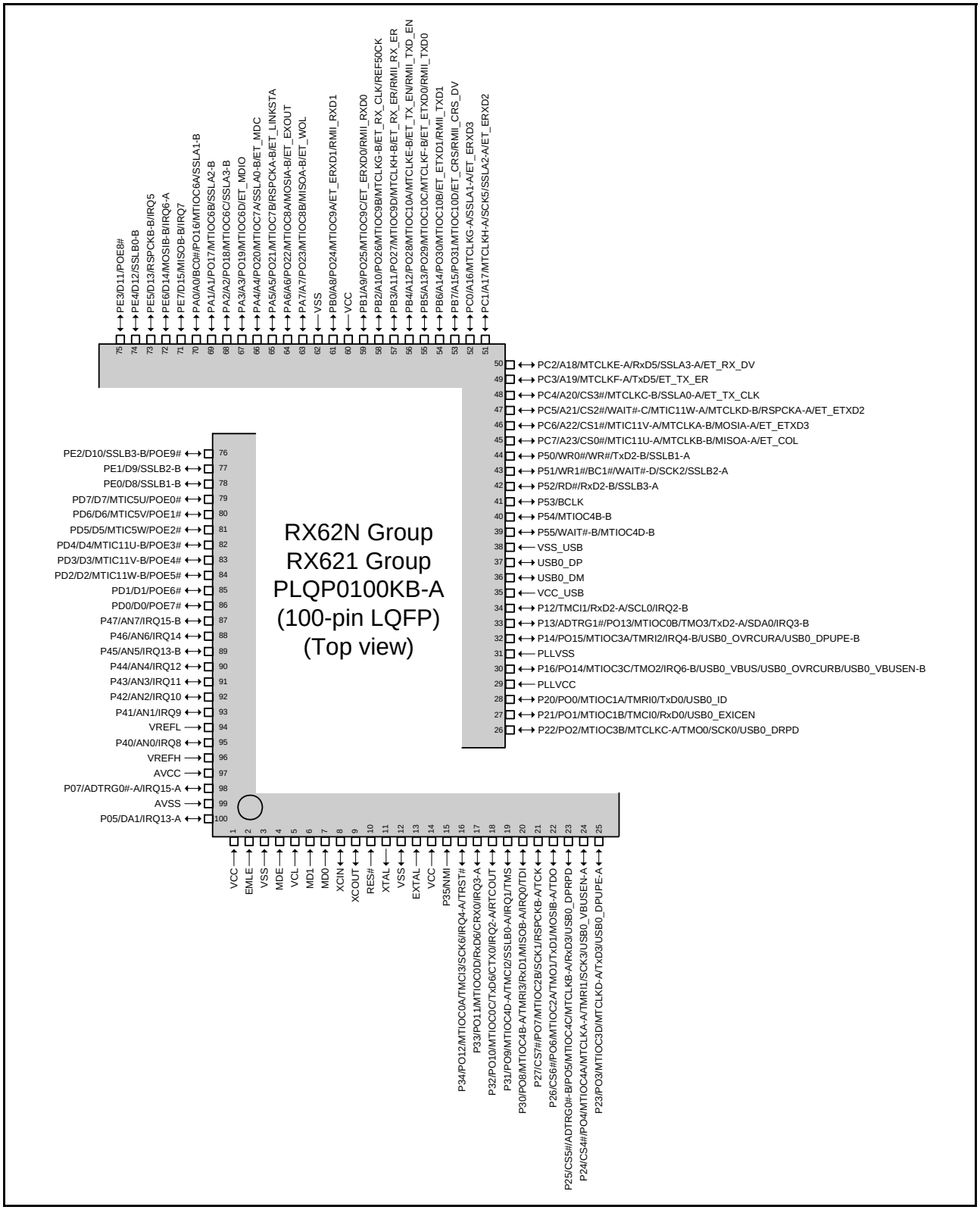

Figure 1.8 Pin Assignment of the 100-Pin LQFP (Assistance Diagram)

	A	B	C	D	E	F	G	H	J	K	
10	PD6	PA1	PA0	PA2	PA4	PA7	PB1	PB4	PC0	PC1	10
9	PD7	PA3	PA5	PA6	PB0	PB2	PB5	PB7	PC3	PC2	9
8	PD5	PD3	BSCANP	VCL	VSS	VCC	PB3	PB6	P51	P50	8
7	PD4	PD2	MD1	RX62N Group RX621 Group PTLG0085JA-A (85-pin TFLGA) (Upper perspective view)				P53	P52	VSS_ USB	7
6	PD1	PD0	P45					P13	USB0_ DM	USB0_ DP	6
5	P47	P46	P44					P14	VCC_ USB	P12	5
4	P43	P42	P41	RES#				PLLVCC	P16	PLLVSS	4
3	VREFL	VREFH	P40	MD0	P34	P32	P27	P26	P24	P20	3
2	AVCC	AVSS	VSS	EMLE	XCOUT	EXTAL	P33	P30	P23	P22	2
1	P05	VCC	P03	MDE	XCIN	XTAL	P35	P31	P25	P21	1
	A	B	C	D	E	F	G	H	J	K	

Figure 1.9 Pin Assignment of the 85-Pin TFLGA

Table 1.4 List of Pins and Pin Functions (176-Pin LFBGA) (1 / 6)

Pin No. 176-Pin LFBGA	Power Supply Clock System Control	I/O Port	External Bus EXDMAC	ETHERC EDMAC	USB	Timers (MTU, TMR, PPG, POE, WDT)	Communi-cation (SCI, CAN, RSPI, RIIC)	Others
A1	AVSS							
A2	AVCC							
A3		P42						IRQ10-B/AN2
A4		P45						IRQ13-B/AN5
A5		P46						IRQ14/AN6
A6		P90	D16/A16-B					
A7		PD0	D0			POE7#		
A8		PD2	D2			MTIC11W-B/ POE5#		
A9		PD3	D3			MTIC11V-B/ POE4#		
A10		PD4	D4			MTIC11U-B/ POE3#		
A11		PG0	D24					
A12		PD7	D7			MTIC5U-B/ POE0#		
A13		P61	CS1#-A/ SDCS#					
A14		P63	CS3#-A/ CAS#					
A15		PE1	D9				SSLB2-B	
B1		P02				TMCI1-A	SCK6-A	IRQ10-A
B2	VREFH							
B3	VREFL							
B4		P44						IRQ12/AN4
B5		P47						IRQ15-B/AN7
B6		P91	D17/A17-B					
B7		PD1	D1			POE6#		
B8		P96	D22/A22-B					
B9		P97	D23/A23-B					
B10		PD6	D6			MTIC5V-B/ POE1#		
B11		P60	CS0#-A					
B12		P62	CS2#-A/ RAS#					
B13		P64	CS4#-A/ WE#					
B14		PE2	D10			POE9#	SSLB3-B	
B15	SDCLK	P70						
C1		P00				TMRI0-A	TxD6-A	IRQ8-A
C2		P03						IRQ11-A/DA0
C3		P05						IRQ13-A/DA1
C4		P07						IRQ15-A/ ADTRG0#-A
C5		P40						IRQ8-B/AN0

Table 1.4 List of Pins and Pin Functions (176-Pin LFBGA) (2 / 6)

Pin No. 176-Pin LFBGA	Power Supply Clock System Control	I/O Port	External Bus EXDMAC	ETHERC EDMAC	USB	Timers (MTU, TMR, PPG, POE, WDT)	Communi-cation (SCI, CAN, RSPI, RIIC)	Others
C6	VCC							
C7		P92	D18/A18-B					
C8		P94	D20/A20-B					
C9	VCC							
C10		PD5	D5			MTIC5W-B/ POE2#		
C11	VCC							
C12		PE0	D8				SSLB1-B	
C13		PE3	D11			POE8#		
C14		PE5	D13				RSPCKB-B	IRQ5-A
C15		PE6	D14				MOSIB-B	IRQ6-A
D1	EMLE							
D2		P01				TMCI0-A	RxD6-A	IRQ9-A
D3	VCC							
D4		P41						IRQ9-B/AN1
D5		P43						IRQ11-B/AN3
D6	VSS							
D7		P93	D19/A19-B					
D8		P95	D21/A21-B					
D9	VSS							
D10		PG1	D25					
D11	VSS							
D12	VSS							
D13		PE4	D12				SSLB0-B	
D14		PE7	D15				MISOB-B	IRQ7-A
D15		P65	CS5#-A/ CKE					
E1	XCIN							
E2	CNVSS							
E3	BSCANP							
E4	VSS							
E12		PG2	D26					TRDATA0
E13	VCC							
E14		P66	CS6#-A/ DQM0					
E15		P67	CS7#-A/ DQM1					
F1	XCOUT							
F2						WDTOVF#		
F3	VCL							
F4	VSS							
F12		PG4	D28					TRSYNC
F13		PG3	D27					TRDATA1
F14		PA0	A0/BC0#/ DQM2			MTIOC6A/ PO16	SSLA1-B	

Table 1.4 List of Pins and Pin Functions (176-Pin LFBGA) (3 / 6)

Pin No. 176-Pin LFBGA	Power Supply Clock System Control	I/O Port	External Bus EXDMAC	ETHERC EDMAC	USB	Timers (MTU, TMR, PPG, POE, WDT)	Communi-cation (SCI, CAN, RSPI, RIIC)	Others
F15		PG5	D29					TRCLK
G1	VSS							
G2	MD1							
G3	MD0							
G4	MDE							
G12	VSS							
G13	VCC							
G14		PG6	D30					TRDATA2
G15		PA1	A1/DQM3			MTIOC6B/ PO17	SSLA2-B	
H1	XTAL							
H2		P35						NMI
H3	VCC							
H4	RES#							
H12		PG7	D31					TRDATA3
H13		PA2	A2			MTIOC6C/ PO18	SSLA3-B	
H14		PA4	A4			MTIOC7A/ PO20	SSLA0-B	
H15		PA3	A3			MTIOC6D/ PO19		
J1	EXTAL							
J2		P32				MTIOC0C/ PO10/ RTCOUT	CTX0/ TxD6-B	IRQ2-A
J3		PF3						TMS
J4		P34				MTIOC0A/ TMCI3-B/ PO12	SCK6-B	IRQ4-A
J12	VSS							
J13		PA5	A5			MTIOC7B/ PO21	RSPCKA-B	
J14		PA7	A7			MTIOC8B/ PO23	MISOA-B	
J15		PA6	A6			MTIOC8A/ PO22	MOSIA-B	
K1		P33				MTIOC0D/ PO11	CRX0/ RxD6-B	IRQ3-A
K2		P31			USB1_DPRPD	MTIOC4D-A/ TMCI2-B/ PO9	SSLB0-A	IRQ1-A
K3		PF0					TxD1-B	TDO
K4		PF4						TRST#
K12		PB1	A9			MTIOC9C/ PO25		
K13		P71	CS1#-B	ET_MDIO				
K14		P72	CS2#-B	ET_MDC				

Table 1.4 List of Pins and Pin Functions (176-Pin LFBGA) (4 / 6)

Pin No. 176-Pin LFBGA	Power Supply Clock System Control	I/O Port	External Bus EXDMAC	ETHERC EDMAC	USB	Timers (MTU, TMR, PPG, POE, WDT)	Communi-cation (SCI, CAN, RSPI, RIIC)	Others
K15		PB0	A8			MTIOC9A/ PO24		
L1		PF2					RxD1-B	TDI
L2		P27	CS7#-C		USB1_EXICEN	MTIOC2B/ PO7	RSPCKB-A/ SCK1-A	
L3	VCC							
L4		P30			USB1_DRPD	MTIOC4B-A/ TMRI3-B/ PO8	MISOB-A/ RxD1-A	IRQ0-A
L12	VSS							
L13		PB4	A12			MTIOC10A/ MTCLKE-B/ PO28		
L14		PB3	A11			MTIOC9D/ MTCLKH-B/ PO27		
L15	VCC							
M1		PF1					SCK1-B	TCK
M2		P25	CS5#-C/ EDACK1-B		USB0_DPRPD	MTIOC4C-A/ MTCLKB-A/ PO5	RxD3-B	ADTRG0#-B
M3		P22	EDREQ0-B		USB0_DRPD	MTIOC3B-A/ MTCLKC-A/ TMO0/ PO2	SCK0	
M4	VSS							
M5		P11			USB1_VBUSEN -A	MTIC5V-A/ TMCI3-A	SCK2-A	IRQ1-B
M6		P55	WAIT#-B/ EDREQ0-C	ET_EXOUT		MTIOC4D-B		
M7		P54	EDACK0-C	ET_LINKSTA		MTIOC4B-B		
M8		P51	WR1#/ BC1#/ WAIT#-D				SSLB2-A/ SCK2-B	
M9	VSS							
M10		PC6	A22-A/ CS1#-C	ET_ETXD3		MTIC11V-A/ MTCLKA-B	MOSIA-A	
M11		P81	EDACK0-A	ET_ETXD0/ RMII_TXD0		MTIOC3D-B		
M12		PC0	A16-A	ET_ERXD3		MTCLKG-A	SSLA1-A	
M13	VCC							
M14		PB6	A14			MTIOC10B/ PO30		
M15		PB2	A10			MTIOC9B/ MTCLKG-B/ PO26		
N1		P26	CS6#-C		USB1_ID	MTIOC2A/ TMO1/ PO6	MOSIB-A/ TxD1-A	

Table 1.4 List of Pins and Pin Functions (176-Pin LFBGA) (5 / 6)

Pin No. 176-Pin LFBGA	Power Supply Clock System Control	I/O Port	External Bus EXDMAC	ETHERC EDMAC	USB	Timers (MTU, TMR, PPG, POE, WDT)	Communi-cation (SCI, CAN, RSPI, RIIC)	Others
N2		P23	EDACK0-B		USB0_DPUPE-A	MTIOC3D-A/ MTCLKD-A/ PO3	TxD3-B	
N3		P20			USB0_ID	MTIOC1A/ TMRI0-B/ PO0	SDA1/ TxD0	
N4		P17			USB1_VBUS/ USB1_OVRCURB/ USB1_VBUSEN-B	MTIOC3A/ PO15	TxD3-A	IRQ7-B
N5		P15			USB1_OVRCURA/ USB1_DPUPE-B	MTIOC0B/ TMCI2-A/ PO13	SCK3-A	IRQ5-B
N6		P57	WAIT#-A/ WR3#/ BC3#/ EDREQ1-C					
N7		P10			USB1_DPUPE-A	MTIC5W-A/ TMRI3-A		IRQ0-B
N8		P52	RD#				SSLB3-A/ RxD2-B	
N9	VCC							
N10		PC5	A21-A/ CS2#-C/ WAIT#-C	ET_ETXD2		MTIC11W-A/ MTCLKD-B	RSPCKA-A	
N11		PC3	A19-A	ET_TX_ER		MTCLKF-A	TxD5	
N12		PC2	A18-A	ET_RX_DV		MTCLKE-A	SSLA3-A/ RxD5	
N13		P74	CS4#-B	ET_ERXD1/ RMII_RXD1				
N14		P73	CS3#-B	ET_WOL				
N15		PB5	A13			MTIOC10C/ MTCLKF-B/ PO29		
P1		P24	CS4#-C/ EDREQ1-B		USB0_VBUSEN-A	MTIOC4A-A/ MTCLKA-A/ TMRI1/ PO4	SCK3-B	
P2	PLLVCC							
P3		P16			USB0_VBUS/ USB0_OVRCURB/ USB0_VBUSEN-B	MTIOC3C-A/ TMO2/ PO14	RxD3-A	IRQ6-B
P4		P14			USB0_OVRCURA/ USB0_DPUPE-B	TMRI2		IRQ4-B
P5		P13				TMO3	SDA0/ TxD2-A	IRQ3-B/ ADTRG1#
P6	VCC_USB							

Table 1.4 List of Pins and Pin Functions (176-Pin LFBGA) (6 / 6)

Pin No. 176-Pin LFBGA	Power Supply Clock System Control	I/O Port	External Bus EXDMAC	ETHERC EDMAC	USB	Timers (MTU, TMR, PPG, POE, WDT)	Communi-cation (SCI, CAN, RSPI, RIIC)	Others
P7		P56	WR2#/ BC2#/ EDACK1-C			MTIOC3C-B		
P8	VCC_USB							
P9		P84						
P10		P50	WR0#/ WR#				SSLB1-A/ TxD2-B	
P11		P82	EDREQ1-A	ET_ETXD1/ RMII_TXD1		MTIOC4A-B		
P12		PC4	A20-A/ CS3#-C	ET_TX_CLK		MTCLKC-B	SSLA0-A	
P13		P76	CS6#-B	ET_RX_CLK/ REF50CK				
P14		PC1	A17-A	ET_ERXD2		MTCLKH-A	SSLA2-A/ SCK5	
P15		PB7	A15			MTIOC10D/ PO31		
R1		P21			USB0_EXICEN	MTIOC1B/ TMCI0-B/ PO1	SCL1/ RxD0	
R2	PLLVSS							
R3		P12				MTIC5U-A/ TMCI1-B	SCL0/ RxD2-A	IRQ2-B
R4					USB0_DM			
R5					USB0_DP			
R6	VSS_USB							
R7					USB1_DM			
R8					USB1_DP			
R9		P85						
R10	BCLK	P53						
R11		P83	EDACK1-A	ET_CRS/ RMII_CRS_DV		MTIOC4C-B		
R12		PC7	A23-A/ CS0#-B	ET_COL		MTIC11U-A/ MTCLKB-B	MISOA-A	
R13		P80	EDREQ0-A	ET_TX_EN/ RMII_TXD_EN		MTIOC3B-B		
R14		P77	CS7#-B	ET_RX_ER/ RMII_RX_ER				
R15		P75	CS5#-B	ET_ERXD0/ RMII_RXD0				

Table 1.5 List of Pins and Pin Functions (145-Pin TFLGA) (1 / 5)

Pin No. 145-Pin TFLGA	Power Supply Clock System Control	I/O Port	External Bus EXDMAC	ETHERC EDMAC	USB	Timers (MTU, TMR, PPG, POE, WDT)	Communi-cation (SCI, CAN, RSPI, RIIC)	Others
A1	AVSS							
A2	AVCC							
A3	VREFL							
A4		P42						IRQ10-B/AN2
A5		P44						IRQ12/AN4
A6		P47						IRQ15-B/AN7
A7		P91	A17-B					
A8		PD0	D0			POE7#		
A9		PD3	D3			MTIC11V-B/ POE4#		
A10		PD6	D6			MTIC5V/ POE1#		
A11		P60	CS0#-A					
A12		P62	CS2#-A/ RAS#					
A13		P64	CS4#-A/ WE#					
B1		P03						IRQ11-A/DA0
B2		P07						IRQ15-A/ ADTRG0#-A
B3	VREFH							
B4		P40						IRQ8-B/AN0
B5		P45						IRQ13-B/AN5
B6		P90	A16-B					
B7		PD1	D1			POE6#		
B8		PD5	D5			MTIC5W/ POE2#		
B9	VSS							
B10		PE0	D8				SSLB1-B	
B11		PE2	D10			POE9#	SSLB3-B	
B12		PE1	D9				SSLB2-B	
B13		PE4	D12				SSLB0-B	
C1		P01				TMCI0-A	RxD6-A	IRQ9-A
C2		P05						IRQ13-A/DA1
C3	VSS							
C4		P41						IRQ9-B/AN1
C5		P46						IRQ14/AN6
C6		P92	A18-B					
C7		PD2	D2			MTIC11W-B/ POE5#		
C8		PD7	D7			MTIC5U/ POE0#		
C9		P61	CS1#-A/ SDCS#					

Table 1.5 List of Pins and Pin Functions (145-Pin TFLGA) (2 / 5)

Pin No. 145-Pin TFLGA	Power Supply Clock System Control	I/O Port	External Bus EXDMAC	ETHERC EDMAC	USB	Timers (MTU, TMR, PPG, POE, WDT)	Communi-cation (SCI, CAN, RSPI, RIIC)	Others
C10		P63	CS3#-A/ CAS#					
C11		PE5	D13				RSPCKB-B	IRQ5-A
C12		PE3	D11			POE8#		
C13	SDCLK	P70						
D1	EMLE							
D2	VCC							
D3		P02				TMCI1-A	SCK6-A	IRQ10-A
D4		P43						IRQ11-B/AN3
D5	VCC							
D6	VSS							
D7		P93	A19-B					
D8		PD4	D4			MTIC11U-B/ POE3#		
D9	VCC							
D10	VSS							
D11	VCC							
D12		PE7	D15				MISOB-B	IRQ7-A
D13		PE6	D14				MOSIB-B	IRQ6-A
E1	VCL							
E2	VSS							
E3		P00				TMRI0-A	TxD6-A	IRQ8-A
E4	BSCANP							
E5	(N.C)							
E10		P65	CS5#-A/ CKE					
E11		P67	CS7#-A/ DQM1					
E12		PA0	A0/BC0#			MTIOC6A/ PO16	SSLA1-B	
E13		P66	CS6#-A/ DQM0					
F1	XCIN							
F2	XCOUT							
F3						WDTOVF#		
F4	MDE							
F10		PA1	A1			MTIOC6B/ PO17	SSLA2-B	
F11		PA3	A3			MTIOC6D/ PO19		
F12	VCC							
F13		PA2	A2			MTIOC6C/ PO18	SSLA3-B	
G1	XTAL							
G2	VSS							

Table 1.5 List of Pins and Pin Functions (145-Pin TFLGA) (3 / 5)

Pin No. 145-Pin TFLGA	Power Supply Clock System Control	I/O Port	External Bus EXDMAC	ETHERC EDMAC	USB	Timers (MTU, TMR, PPG, POE, WDT)	Communi-cation (SCI, CAN, RSPI, RIIC)	Others
G3	MD1							
G4	MD0							
G10	VSS							
G11		PA5	A5			MTIOC7B/ PO21	RSPCKA-B	
G12		PA6	A6			MTIOC8A/ PO22	MOSIA-B	
G13		PA4	A4			MTIOC7A/ PO20	SSLA0-B	
H1	EXTAL							
H2		P34				MTIOC0A/ TMCI3/ PO12	SCK6-B	IRQ4-A/ TRST#
H3	VCC							
H4	RES#							
H10		PB0	A8			MTIOC9A/ PO24		
H11		P71	CS1#-B	ET_MDIO				
H12		PB1	A9			MTIOC9C/ PO25		
H13		PA7	A7			MTIOC8B/ PO23	MISOA-B	
J1		P33				MTIOC0D/ PO11	CRX0/ RxD6-B	IRQ3-A
J2		P27	CS7#-C			MTIOC2B/ PO7	RSPCKB-A/ SCK1	TCK
J3		P35						NMI
J4		P32				MTIOC0C/ PO10/ RTCOUT	CTX0/ TxD6-B	IRQ2-A
J10		PB2	A10			MTIOC9B/ MTCLKG-B/ PO26		
J11		PB4	A12			MTIOC10A/ MTCLKE-B/ PO28		
J12		PB5	A13			MTIOC10C/ MTCLKF-B/ PO29		
J13		P72	CS2#-B	ET_MDC				
K1		P30				MTIOC4B-A/ TMRI3/ PO8	RxD1/ MISOB-A	IRQ0/ TDI
K2		P24	CS4#-C/ EDREQ1-B		USB0_VBUSEN-A	MTIOC4A-A/ MTCLKA-A/ TMRI1/PO4	SCK3-B	
K3		P31				MTIOC4D-A/ TMCI2-B/ PO9	SSLB0-A	IRQ1/ TMS

Table 1.5 List of Pins and Pin Functions (145-Pin TFLGA) (4 / 5)

Pin No. 145-Pin TFLGA	Power Supply Clock System Control	I/O Port	External Bus EXDMAC	ETHERC EDMAC	USB	Timers (MTU, TMR, PPG, POE, WDT)	Communi-cation (SCI, CAN, RSPI, RIIC)	Others
K4		P26	CS6#-C			MTIOC2A/ TMO1/ PO6	MOSIB-A/ TxD1	TDO
K5	BCLK	P53						
K6	VSS							
K7		PC7	A23/ CS0#-B	ET_COL		MTIC11U-A/ MTCLKB-B	MISOA-A	
K8		P82	EDREQ1-A	ET_ETXD1/ RMII_TXD1		MTIOC4A-B		TRSYNC
K9		PC3	A19-A	ET_TX_ER		MTCLKF-A	TxD5	
K10		PB7	A15			MTIOC10D/ PO31		
K11		P73	CS3#-B	ET_WOL				
K12		PC0	A16-A	ET_ERXD3		MTCLKG-A	SSLA1-A	
K13		PB3	A11			MTIOC9D/ MTCLKH-B/ PO27		
L1		P25	CS5#-C/ EDACK1-B		USB0_DPRPD	MTIOC4C-A/ MTCLKB-A/ PO5	RxD3-B	ADTRG0#-B
L2		P22	EDREQ0-B		USB0_DRPD	MTIOC3B-A/ MTCLKC-A/ TMO0/PO2	SCK0	
L3		P17				MTIOC3A/ PO15	TxD3-A	IRQ7-B
L4		P12				TMCI1-B	SCL0/ RxD2-A	IRQ2-B
L5	VCC_USB							
L6		P56	EDACK1-C			MTIOC3C-B		
L7		P52	RD#				SSLB3-A/ RxD2-B	
L8		P83	EDACK1-A	ET_CRS/ RMII_CRS_DV		MTIOC4C-B		TRCLK
L9		P81	EDACK0-A	ET_ETXD0/ RMII_TXD0		MTIOC3D-B		TRDATA1
L10		P77	CS7#-B	ET_RX_ER/ RMII_RX_ER				
L11		P75	CS5#-B	ET_ERXD0/ RMII_RXD0				
L12	VCC							
L13		PB6	A14			MTIOC10B/ PO30		
M1		P23	EDACK0-B		USB0_DPUPE-A	MTIOC3D-A/ MTCLKD-A/ PO3	TxD3-B	
M2		P20			USB0_ID	MTIOC1A/ TMRI0-B/ PO0	SDA1/ TxD0	
M3	PLLVCC							

Table 1.5 List of Pins and Pin Functions (145-Pin TFLGA) (5 / 5)

Pin No. 145-Pin TFLGA	Power Supply Clock System Control	I/O Port	External Bus EXDMAC	ETHERC EDMAC	USB	Timers (MTU, TMR, PPG, POE, WDT)	Communi-cation (SCI, CAN, RSPI, RIIC)	Others
M4		P15				MTIOC0B/ TMCI2-A/ PO13	SCK3-A	IRQ5-B
M5		P14			USB0_OVRCURA/ USB0_DPUPE-B	TMRI2		IRQ4-B
M6	VSS_USB							
M7		P55	WAIT#-B/ EDREQ0-C	ET_EXOUT		MTIOC4D-B		TRDATA3
M8		P50	WR0#/ WR#				SSLB1-A/ TxD2-B	
M9		PC6	A22/CS1#-C	ET_ETXD3		MTIC11V-A/ MTCLKA-B	MOSIA-A	
M10		P80	EDREQ0-A	ET_TX_EN/ RMII_TXD_EN		MTIOC3B-B		TRDATA0
M11		PC2	A18-A	ET_RX_DV		MTCLKE-A	SSLA3-A/ RxD5	
M12		PC1	A17-A	ET_ERXD2		MTCLKH-A	SSLA2-A/ SCK5	
M13	VSS							
N1		P21			USB0_EXICEN	MTIOC1B/ TMCI0-B/ PO1	SCL1/RxD0	
N2		P16			USB0_VBUS/ USB0_OVRCURB/ USB0_VBUSEN-B	MTIOC3C-A/ TMO2/ PO14	RxD3-A	IRQ6-B
N3	PLLVSS							
N4		P13				TMO3	SDA0/ TxD2-A	IRQ3-B/ ADTRG1#
N5					USB0_DM			
N6					USB0_DP			
N7		P54	EDACK0-C	ET_LINKSTA		MTIOC4B-B		TRDATA2
N8		P51	WR1#/BC1#/ WAIT#-D				SSLB2-A/ SCK2	
N9	VCC							
N10		PC5	A21/CS2#-C/ WAIT#-C	ET_ETXD2		MTIC11W-A/ MTCLKD-B	RSPCKA-A	
N11		PC4	A20/CS3#-C	ET_TX_CLK		MTCLKC-B	SSLA0-A	
N12		P76	CS6#-B	ET_RX_CLK/ REF50CK				
N13		P74	CS4#-B	ET_ERXD1/ RMII_RXD1				

Table 1.6 List of Pins and Pin Functions (144-Pin LQFP) (1 / 5)

Pin No. 144-Pin LQFP	Power Supply Clock System Control	I/O Port	External Bus EXDMAC	ETHERC EDMAC	USB	Timers (MTU, TMR, PPG, POE, WDT)	Communi-cation (SCI, CAN, RSPI, RIIC)	Others
1	AVSS							
2		P05						IRQ13-A/DA1
3	VCC							
4		P03						IRQ11-A/DA0
5	VSS							
6		P02				TMCI1-A	SCK6-A	IRQ10-A
7		P01				TMCI0-A	RxD6-A	IRQ9-A
8		P00				TMRI0-A	TxD6-A	IRQ8-A
9	BSCANP							
10	EMLE							
11						WDTOVF#		
12	VSS							
13	MDE							
14	VCL							
15	MD1							
16	MD0							
17	XCIN							
18	XCOUT							
19	RES#							
20	XTAL							
21	VSS							
22	EXTAL							
23	VCC							
24		P35						NMI
25		P34				MTIOC0A/ TMCI3/ PO12	SCK6-B	IRQ4-A/ TRST#
26		P33				MTIOC0D/ PO11	CRX0/ RxD6-B	IRQ3-A
27		P32				MTIOC0C/ PO10/ RTCOUT	CTX0/ TxD6-B	IRQ2-A
28		P31				MTIOC4D-A/ TMCI2-B/ PO9	SSLB0-A	IRQ1/ TMS
29		P30				MTIOC4B-A/ TMRI3/ PO8	RxD1/ MISOB-A	IRQ0/ TDI
30		P27	CS7#-C			MTIOC2B/ PO7	RSPCKB-A/ SCK1	TCK
31		P26	CS6#-C			MTIOC2A/ TMO1/ PO6	MOSIB-A/ TxD1	TDO

Table 1.6 List of Pins and Pin Functions (144-Pin LQFP) (2 / 5)

Pin No. 144-Pin LQFP	Power Supply Clock System Control	I/O Port	External Bus EXDMAC	ETHERC EDMAC	USB	Timers (MTU, TMR, PPG, POE, WDT)	Communi-cation (SCI, CAN, RSPI, RIIC)	Others
32		P25	CS5#-C/ EDACK1-B		USB0_DPRPD	MTIOC4C-A/ MTCLKB-A/ PO5	RxD3-B	ADTRG0#-B
33		P24	CS4#-C/ EDREQ1-B		USB0_VBUSEN-A	MTIOC4A-A/ MTCLKA-A/ TMRI1/PO4	SCK3-B	
34		P23	EDACK0-B		USB0_DPUPE-A	MTIOC3D-A/ MTCLKD-A/ PO3	TxD3-B	
35		P22	EDREQ0-B		USB0_DRPD	MTIOC3B-A/ MTCLKC-A/ TMO0/PO2	SCK0	
36		P21			USB0_EXICEN	MTIOC1B/ TMCI0-B/ PO1	SCL1/RxD0	
37		P20			USB0_ID	MTIOC1A/ TMRI0-B/ PO0	SDA1/ TxD0	
38		P17				MTIOC3A/ PO15	TxD3-A	IRQ7-B
39	PLLVCC							
40		P16			USB0_VBUS/ USB0_OVRCURB/ USB0_VBUSEN-B	MTIOC3C-A/ TMO2/ PO14	RxD3-A	IRQ6-B
41	PLLVSS							
42		P15				MTIOC0B/ TMCI2-A/ PO13	SCK3-A	IRQ5-B
43		P14			USB0_OVRCURA/ USB0_DPUPE-B	TMRI2		IRQ4-B
44		P13				TMO3	SDA0/ TxD2-A	IRQ3-B/ ADTRG1#
45		P12				TMCI1-B	SCL0/ RxD2-A	IRQ2-B
46	VCC_USB							
47					USB0_DM			
48					USB0_DP			
49	VSS_USB							
50		P56	EDACK1-C			MTIOC3C-B		
51		P55	WAIT#-B/ EDREQ0-C	ET_EXOUT		MTIOC4D-B		TRDATA3
52		P54	EDACK0-C	ET_LINKSTA		MTIOC4B-B		TRDATA2
53	BCLK	P53						
54		P52	RD#				SSLB3-A/ RxD2-B	

Table 1.6 List of Pins and Pin Functions (144-Pin LQFP) (3 / 5)

Pin No. 144-Pin LQFP	Power Supply Clock System Control	I/O Port	External Bus EXDMAC	ETHERC EDMAC	USB	Timers (MTU, TMR, PPG, POE, WDT)	Communi-cation (SCI, CAN, RSPI, RIIC)	Others
55		P51	WR1#/BC1#/ WAIT#-D				SSLB2-A/ SCK2	
56		P50	WR0#/ WR#				SSLB1-A/ TxD2-B	
57	VSS							
58		P83	EDACK1-A	ET_CRS/ RMII_CRS_DV		MTIOC4C-B		TRCLK
59	VCC							
60		PC7	A23/ CS0#-B	ET_COL		MTIC11U-A/ MTCLKB-B	MISOA-A	
61		PC6	A22/ CS1#-C	ET_ETXD3		MTIC11V-A/ MTCLKA-B	MOSIA-A	
62		PC5	A21/CS2#-C/ WAIT#-C	ET_ETXD2		MTIC11W-A/ MTCLKD-B	RSPCKA-A	
63		P82	EDREQ1-A	ET_ETXD1/ RMII_TXD1		MTIOC4A-B		TRSYNC
64		P81	EDACK0-A	ET_ETXD0/ RMII_TXD0		MTIOC3D-B		TRDATA1
65		P80	EDREQ0-A	ET_TX_EN/ RMII_TXD_EN		MTIOC3B-B		TRDATA0
66		PC4	A20/CS3#-C	ET_TX_CLK		MTCLKC-B	SSLA0-A	
67		PC3	A19-A	ET_TX_ER		MTCLKF-A	TxD5	
68		P77	CS7#-B	ET_RX_ER/ RMII_RX_ER				
69		P76	CS6#-B	ET_RX_CLK/ REF50CK				
70		PC2	A18-A	ET_RX_DV		MTCLKE-A	SSLA3-A/ RxD5	
71		P75	CS5#-B	ET_ERXD0/ RMII_RXD0				
72		P74	CS4#-B	ET_ERXD1/ RMII_RXD1				
73		PC1	A17-A	ET_ERXD2		MTCLKH-A	SSLA2-A/ SCK5	
74	VCC							
75		PC0	A16-A	ET_ERXD3		MTCLKG-A	SSLA1-A	
76	VSS							
77		P73	CS3#-B	ET_WOL				
78		PB7	A15			MTIOC10D/ PO31		
79		PB6	A14			MTIOC10B/ PO30		
80		PB5	A13			MTIOC10C/ MTCLKF-B/ PO29		
81		PB4	A12			MTIOC10A/ MTCLKE-B/ PO28		

Table 1.6 List of Pins and Pin Functions (144-Pin LQFP) (4 / 5)

Pin No. 144-Pin LQFP	Power Supply Clock System Control	I/O Port	External Bus EXDMAC	ETHERC EDMAC	USB	Timers (MTU, TMR, PPG, POE, WDT)	Communi-cation (SCI, CAN, RSPI, RIIC)	Others
82		PB3	A11			MTIOC9D/ MTCLKH-B/ PO27		
83		PB2	A10			MTIOC9B/ MTCLKG-B/ PO26		
84		PB1	A9			MTIOC9C/ PO25		
85		P72	CS2#-B	ET_MDC				
86		P71	CS1#-B	ET_MDIO				
87		PB0	A8			MTIOC9A/ PO24		
88		PA7	A7			MTIOC8B/ PO23	MISOA-B	
89		PA6	A6			MTIOC8A/ PO22	MOSIA-B	
90		PA5	A5			MTIOC7B/ PO21	RSPCKA-B	
91	VCC							
92		PA4	A4			MTIOC7A/ PO20	SSLA0-B	
93	VSS							
94		PA3	A3			MTIOC6D/ PO19		
95		PA2	A2			MTIOC6C/ PO18	SSLA3-B	
96		PA1	A1			MTIOC6B/ PO17	SSLA2-B	
97		PA0	A0/BC0#/			MTIOC6A/ PO16	SSLA1-B	
98		P67	CS7#-A/ DQM1					
99		P66	CS6#-A/ DQM0					
100		P65	CS5#-A/ CKE					
101		PE7	D15				MISOB-B	IRQ7-A
102		PE6	D14				MOSIB-B	IRQ6-A
103	VCC							
104	SDCLK	P70						
105	VSS							
106		PE5	D13				RSPCKB-B	IRQ5-A
107		PE4	D12				SSLB0-B	
108		PE3	D11			POE8#		
109		PE2	D10			POE9#	SSLB3-B	
110		PE1	D9				SSLB2-B	
111		PE0	D8				SSLB1-B	

Table 1.6 List of Pins and Pin Functions (144-Pin LQFP) (5 / 5)

Pin No. 144-Pin LQFP	Power Supply Clock System Control	I/O Port	External Bus EXDMAC	ETHERC EDMAC	USB	Timers (MTU, TMR, PPG, POE, WDT)	Communi-cation (SCI, CAN, RSPI, RIIC)	Others
112		P64	CS4#-A/ WE#					
113		P63	CS3#-A/ CAS#					
114		P62	CS2#-A/ RAS#					
115		P61	CS1#-A/ SDCS#					
116	VSS							
117		P60	CS0#-A					
118	VCC							
119		PD7	D7			MTIC5U/ POE0#		
120		PD6	D6			MTIC5V/ POE1#		
121		PD5	D5			MTIC5W/ POE2#		
122		PD4	D4			MTIC11U-B/ POE3#		
123		PD3	D3			MTIC11V-B/ POE4#		
124		PD2	D2			MTIC11W-B/ POE5#		
125		PD1	D1			POE6#		
126		PD0	D0			POE7#		
127		P93	A19-B					
128		P92	A18-B					
129		P91	A17-B					
130	VSS							
131		P90	A16-B					
132	VCC							
133		P47						IRQ15-B/AN7
134		P46						IRQ14/AN6
135		P45						IRQ13-B/AN5
136		P44						IRQ12/AN4
137		P43						IRQ11-B/AN3
138		P42						IRQ10-B/AN2
139		P41						IRQ9-B/AN1
140	VREFL							
141		P40						IRQ8-B/AN0
142	VREFH							
143	AVCC							
144		P07						IRQ15-A/ ADTRG0#-A

Table 1.7 List of Pins and Pin Functions (100-Pin LQFP) (1 / 4)

Pin No. 100-PIn LQFP	Power Supply Clock System Control	I/O Port	External Bus	ETHERC EDMAC	USB	Timers (MTU, TMR, PPG, POE)	Communi-cation (SCI, CAN, RSPI, RIIC)	Others
1	VCC							
2	EMLE							
3	VSS							
4	MDE							
5	VCL							
6	MD1							
7	MD0							
8	XCIN							
9	XCOUT							
10	RES#							
11	XTAL							
12	VSS							
13	EXTAL							
14	VCC							
15		P35						NMI
16		P34				MTIOC0A/ TMCI3/ PO12	SCK6	IRQ4-A/ TRST#
17		P33				MTIOC0D/ PO11	CRX0/ RxD6	IRQ3-A
18		P32				MTIOC0C/ PO10/ RTCOUT	CTX0/ TxD6	IRQ2-A
19		P31				MTIOC4D-A/ TMCI2/ PO9	SSLB0-A	IRQ1/ TMS
20		P30				MTIOC4B-A/ TMRI3/ PO8	RxD1/ MISOB-A	IRQ0/ TDI
21		P27	CS7#			MTIOC2B/ PO7	RSPCKB-A/ SCK1	TCK
22		P26	CS6#			MTIOC2A/ TMO1/ PO6	MOSIB-A/ TxD1	TDO
23		P25	CS5#		USB0_DPRPD	MTIOC4C/ MTCLKB-A/ PO5	RxD3	ADTRG0#-B
24		P24	CS4#		USB0_VBUSEN-A	MTIOC4A/ MTCLKA-A/ TMRI1/PO4	SCK3	
25		P23			USB0_DPUPE-A	MTIOC3D/ MTCLKD-A/ PO3	TxD3	
26		P22			USB0_DRPD	MTIOC3B/ MTCLKC-A/ TMO0/PO2	SCK0	

Table 1.7 List of Pins and Pin Functions (100-Pin LQFP) (2 / 4)

Pin No. 100-Pin LQFP	Power Supply Clock System Control	I/O Port	External Bus	ETHERC EDMAC	USB	Timers (MTU, TMR, PPG, POE)	Communi-cation (SCI, CAN, RSPI, RIIC)	Others
27		P21			USB0_EXICEN	MTIOC1B/ TMCI0/ PO1	RxD0	
28		P20			USB0_ID	MTIOC1A/ TMRI0/ PO0	TxD0	
29	PLLVCC							
30		P16			USB0_VBUS/ USB0_OVRCURB/ USB0_VBUSEN-B	MTIOC3C/ TMO2/ PO14		IRQ6-B
31	PLLVSS							
32		P14			USB0_OVRCURA/ USB0_DPUPE-B	MTIOC3A/ TMRI2/ PO15		IRQ4-B
33		P13				MTIOC0B/ TMO3/ PO13	SDA0/ TxD2-A	IRQ3-B/ ADTRG1#
34		P12				TMCI1	SCL0/ RxD2-A	IRQ2-B
35	VCC_USB							
36					USB0_DM			
37					USB0_DP			
38	VSS_USB							
39		P55	WAIT#-B			MTIOC4D-B		
40		P54				MTIOC4B-B		
41	BCLK	P53						
42		P52	RD#				SSLB3-A/ RxD2-B	
43		P51	WR1#/BC1#/ WAIT#-D				SSLB2-A/ SCK2	
44		P50	WR0#/ WR#				SSLB1-A/ TxD2-B	
45		PC7	A23/ CS0#	ET_COL		MTIC11U-A/ MTCLKB-B	MISOA-A	
46		PC6	A22/ CS1#	ET_ETXD3		MTIC11V-A/ MTCLKA-B	MOSIA-A	
47		PC5	A21/CS2#/ WAIT#-C	ET_ETXD2		MTIC11W-A/ MTCLKD-B	RSPCKA-A	
48		PC4	A20/CS3#	ET_TX_CLK		MTCLKC-B	SSLA0-A	
49		PC3	A19	ET_TX_ER		MTCLKF-A	TxD5	
50		PC2	A18	ET_RX_DV		MTCLKE-A	SSLA3-A/ RxD5	
51		PC1	A17	ET_ERXD2		MTCLKH-A	SSLA2-A/ SCK5	
52		PC0	A16	ET_ERXD3		MTCLKG-A	SSLA1-A	

Table 1.7 List of Pins and Pin Functions (100-Pin LQFP) (3 / 4)

Pin No. 100-Pin LQFP	Power Supply Clock System Control	I/O Port	External Bus	ETHERC EDMAC	USB	Timers (MTU, TMR, PPG, POE)	Communi-cation (SCI, CAN, RSPI, RIIC)	Others
53		PB7	A15	ET_CRS/ RMII_CRS_DV		MTIOC10D/ PO31		
54		PB6	A14	ET_ETXD1/ RMII_TXD1		MTIOC10B/ PO30		
55		PB5	A13	ET_ETXD0/ RMII_TXD0		MTIOC10C/ MTCLKF-B/ PO29		
56		PB4	A12	ET_TX_EN/ RMII_TXD_EN		MTIOC10A/ MTCLKE-B/ PO28		
57		PB3	A11	ET_RX_ER/ RMII_RX_ER		MTIOC9D/ MTCLKH-B/ PO27		
58		PB2	A10	ET_RX_CLK/ REF50CK		MTIOC9B/ MTCLKG-B/ PO26		
59		PB1	A9	ET_ERXD0/ RMII_RXD0		MTIOC9C/ PO25		
60	VCC							
61		PB0	A8	ET_ERXD1/ RMII_RXD1		MTIOC9A/ PO24		
62	VSS							
63		PA7	A7	ET_WOL		MTIOC8B/ PO23	MISOA-B	
64		PA6	A6	ET_EXOUT		MTIOC8A/ PO22	MOSIA-B	
65		PA5	A5	ET_LINKSTA		MTIOC7B/ PO21	RSPCKA-B	
66		PA4	A4	ET_MDC		MTIOC7A/ PO20	SSLA0-B	
67		PA3	A3	ET_MDIO		MTIOC6D/ PO19		
68		PA2	A2			MTIOC6C/ PO18	SSLA3-B	
69		PA1	A1			MTIOC6B/ PO17	SSLA2-B	
70		PA0	A0/BC0#			MTIOC6A/ PO16	SSLA1-B	
71		PE7	D15				MISOB-B	IRQ7
72		PE6	D14				MOSIB-B	IRQ6-A
73		PE5	D13				RSPCKB-B	IRQ5
74		PE4	D12				SSLB0-B	
75		PE3	D11			POE8#		
76		PE2	D10			POE9#	SSLB3-B	
77		PE1	D9				SSLB2-B	
78		PE0	D8				SSLB1-B	
79		PD7	D7			MTIC5U/ POE0#		

Table 1.7 List of Pins and Pin Functions (100-Pin LQFP) (4 / 4)

Pin No. 100-Pin LQFP	Power Supply Clock System Control	I/O Port	External Bus	ETHERC EDMAC	USB	Timers (MTU, TMR, PPG, POE)	Communi-cation (SCI, CAN, RSPI, RIIC)	Others
80		PD6	D6			MTIC5V/ POE1#		
81		PD5	D5			MTIC5W/ POE2#		
82		PD4	D4			MTIC11U-B/ POE3#		
83		PD3	D3			MTIC11V-B/ POE4#		
84		PD2	D2			MTIC11W-B/ POE5#		
85		PD1	D1			POE6#		
86		PD0	D0			POE7#		
87		P47						IRQ15-B/AN7
88		P46						IRQ14/AN6
89		P45						IRQ13-B/AN5
90		P44						IRQ12/AN4
91		P43						IRQ11/AN3
92		P42						IRQ10/AN2
93		P41						IRQ9/AN1
94	VREFL							
95		P40						IRQ8/AN0
96	VREFH							
97	AVCC							
98		P07						IRQ15-A/ ADTRG0#-A
99	AVSS							
100		P05						DA1/IRQ13-A

Table 1.8 List of Pins and Pin Functions (85-Pin TFLGA) (1 / 3)

Pin No. 85-Pin TFLGA	Power Supply Clock System Control	I/O Port	External Bus	USB	Timers (MTU, TMR, PPG)	Communi-cation (SCI, CAN, RSPI, RIIC)	Others
A1		P05					DA1/ IRQ13-A
A2	AVCC						
A3	VREFL						
A4		P43					IRQ11-B/AN3
A5		P47					IRQ15/ AN7
A6		PD1	D1				
A7		PD4	D4		MTIC11U		
A8		PD5	D5		MTIC5W		
A9		PD7	D7		MTIC5U		
A10		PD6	D6		MTIC5V		
B1	VCC						
B2	AVSS						
B3	VREFH						
B4		P42					IRQ10/ AN2
B5		P46					IRQ14/ AN6
B6		PD0	D0				
B7		PD2	D2		MTIC11W		
B8		PD3	D3		MTIC11V		
B9		PA3	A3		MTIOC6D/PO19		
B10		PA1	A1		MTIOC6B/PO17	SSLA2	
C1		P03					IRQ11-A/DA0
C2	VSS						
C3		P40					IRQ8/ AN0
C4		P41					IRQ9/ AN1
C5		P44					IRQ12/ AN4
C6		P45					IRQ13-B/AN5
C7	MD1						
C8	BSCANP						
C9		PA5	A5		MTIOC7B/PO21	RSPCKA	
C10		PA0	A0		MTIOC6A/PO16	SSLA1	
D1	MDE						
D2	EMLE						
D3	MD0						
D4	RES#						

Table 1.8 List of Pins and Pin Functions (85-Pin TFLGA) (2 / 3)

Pin No. 85-Pin TFLGA	Power Supply Clock System Control	I/O Port	External Bus	USB	Timers (MTU, TMR, PPG)	Communi-cation (SCI, CAN, RSPI, RIIC)	Others
D8	VCL						
D9		PA6	A6		MTIOC8A/PO22	MOSIA	
D10		PA2	A2		MTIOC6C/PO18	SSLA3	
E1	XCIN						
E2	XCOUT						
E3		P34			MTIOC0A/TMCI3/PO12	SCK6	IRQ4-A/ TRST#
E8	VSS						
E9		PB0	A8		MTIOC9A/PO24		
E10		PA4	A4		MTIOC7A/PO20	SSLA0	
F1	XTAL						
F2	EXTAL						
F3		P32			MTIOC0C/PO10/RTCOUT	TxD6/CTX0	IRQ2-A
F8	VCC						
F9		PB2	A10		MTIOC9B/MTCLKG-B/ PO26		
F10		PA7	A7		MTIOC8B/PO23	MISOA	
G1		P35					NMI
G2		P33			MTIOC0D/PO11	RxD6/CRX0	IRQ3-A
G3		P27	CS7#		MTIOC2B/PO7	SCK1/RSPCKB	TCK
G8		PB3	A11		MTIOC9D/MTCLKH-B/PO27		
G9		PB5	A13		MTIOC10C/MTCLKF-B/PO29		
G10		PB1	A9		MTIOC9C/PO25		
H1		P31			MTIOC4D/TMCI2/PO9	SSLB0	IRQ1/ TMS
H2		P30			MTIOC4B/TMRI3/PO8	RxD1/MISOB	IRQ0/ TDI
H3		P26	CS6#		MTIOC2A/TMO1/PO6	TxD1/MOSIB	TDO
H4	PLLVCC						
H5		P14		USB0_OVRCUR A/USB0_DPUPE-B	MTIOC3A/TMRI2/PO15		IRQ4-B
H6		P13			MTIOC0B/TMO3/PO13	TxD2-A/SDA0	IRQ3-B/ ADTRG 1#
H7	BCLK	P53					
H8		PB6	A14		MTIOC10B/PO30		
H9		PB7	A15		MTIOC10D/PO31		
H10		PB4	A12		MTIOC10A/MTCLKE-B/PO28		
J1		P25	CS5#	USB0_DPRPD	MTIOC4C/MTCLKB/PO5	RxD3	ADTRG 0#
J2		P23		USB0_DPUPE-A	MTIOC3D/MTCLKD/PO3	TxD3	
J3		P24	CS4#	USB0_VBUSEN-A	MTIOC4A/MTCLKA/TMRI1/ PO4	SCK3	

Table 1.8 List of Pins and Pin Functions (85-Pin TFLGA) (3 / 3)

Pin No. 85-Pin TFLGA	Power Supply Clock System Control	I/O Port	External Bus	USB	Timers (MTU, TMR, PPG)	Communi-cation (SCI, CAN, RSPI, RIIC)	Others
J4		P16		USB0_VBUS/ USB0_OVRCUR B/ USB0_VBUSEN-B	MTIOC3C/TMO2/PO14		IRQ6
J5	VCC_USB						
J6				USB0_DM			
J7		P52	RD#			RxD2-B/SSLB3	
J8		P51	WAIT#			SCK2/SSLB2	
J9		PC3	A19		MTCLKF-A	TxD5	
J10		PC0	A16		MTCLKG-A		
K1		P21		USB0_EXICEN	MTIOC1B/TMCI0/PO1	RxD0/SCL1	
K2		P22		USB0_DRPD	MTIOC3B/MTCLKC/TMO0/PO2	SCK0	
K3		P20		USB0_ID	MTIOC1A/TMRI0/PO0	TxD0/SDA1	
K4	PLLVSS						
K5		P12			TMCI1	RxD2-A/SCL0	IRQ2-B
K6				USB0_DP			
K7	VSS_USB						
K8		P50	WR0#			TxD2-B/SSLB1	
K9		PC2	A18		MTCLKE-A	RxD5	
K10		PC1	A17		MTCLKH-A	SCK5	

1.5 Pin Functions

Table 1.8 lists the pin functions.

Table 1.9 Pin Functions (1 / 7)

Classifications	Pin Name	I/O	Description
Power supply	VCC	Input	Power supply pin. Connect it to the system power supply.
	VCL	Input	Connect this pin to VSS via a 0.1-μF capacitor. The capacitor should be placed close to the pin.
	VSS	Input	Ground pin. Connect it to the system power supply (0 V).
	PLLVCC	Input	Power supply pin for the PLL circuit. Connect it to the system power supply.
	PLLVSS	Input	Ground pin for the PLL circuit.
Clock	XTAL	Output	Pins for a crystal resonator. An external clock signal can be input through the EXTAL pin.
	EXTAL	Input	
	BCLK	Output	Outputs the external bus clock for external devices.
	SDCLK	Output	Outputs the clock dedicated for the SDRAM.
	XCOUT	Output	Input/output pins for the subclock generation circuit. Connect a crystal resonator between XCOUT and XCIN.
	XCIN	Input	
Operating mode control	MD0, MD1, MDE	Input	Pins for setting the operating mode. The signal levels on these pins must not be changed during operation.
System control	RES#	Input	Reset signal input pin. This LSI enters the reset state when this signal goes low.
	EMLE	Input	Input pin to enable the connection of the on-chip emulator signal. When the on-chip emulator is used, this pin should be driven high. When not used, it should be driven low.
	BSCANP	Input	Boundary scan pin. Boundary scan is enabled when this pin goes high. When not used, it should be driven low.
CNVSS	CNVSS	Input	Connect this pin to VSS via pull-down resister.
On-chip emulator	TRST#	Input	On-chip emulator pins or boundary scan pins. When the EMLE pin is driven high, these pins are dedicated for the on-chip emulator.
	TMS	Input	
	TDI	Input	
	TCK	Input	
	TDO	Output	
	TRCLK	Output	This pin outputs the clock for synchronization with the trace data.
	TRSYNC	Output	This pin indicates that output from the TRDATA0 to TRDATA3 pins is valid.
	TRDATA0-A/TRDATA3-B	Output	These pins output the trace information.
Address bus	A0 to A15 A16-A/A16-B to A23-A/A23-B	Output	Output pins for the address.
Data bus	D0 to D31	I/O	Input and output pins for the bidirectional data bus.

Table 1.9 Pin Functions (2 / 7)

Classifications	Pin Name	I/O	Description
Bus control	RD#	Output	Strobe signal which indicates that reading from the external bus interface space is in progress.
	WR#	Output	Strobe signal which indicates that writing to the external bus interface space is in progress, in 1-write strobe mode.
	WR0# to WR3#	Output	Strobe signals which indicate that any group of data bus pins (D7 to D0, D15 to D8, D23 to D16, and D31 to D24) is valid in writing to the external bus interface space, in byte strobe mode.
	BC0# to BC3#	Output	Strobe signals which indicate that any group of data bus pins (D7 to D0, D15 to D8, D23 to D16, and D31 to D24) is valid in access to the external bus interface space, in 1-write strobe mode.
	WE#	Output	Output pin for SDRAM write enable signals.
	CAS#	Output	Output pin for SDRAM column address strobe signals.
	RAS#	Output	Output pin for SDRAM row address strobe signals.
	CKE	Output	Output pin for SDRAM clock enable signals.
	DQM0 to DQM34	Output	Output pins for SDRAM I/O data mask enable signals.
	SDCS#	Output	Output pin for SDRAM chip select signals.
	CS0#-A/CS0#-B CS1#-A/CS1#-B/CS1#-C CS2#-A/CS2#-B/CS2#-C CS3#-A/CS3#-B/CS3#-C CS4#-A/CS4#-B/CS4#-C CS5#-A/CS5#-B/CS5#-C CS6#-A/CS6#-B/CS6#-C CS7#-A/CS7#-B/CS7#-C	Output	Select signals for areas 0 to 7.
	WAIT#-A/WAIT#-B/ WAIT#-C/WAIT#-D	Input	Input pins for wait request signals in access to the external space.
EXDMA controller	EDREQ0-A/EDREQ0-B/ EDREQ0-C	Input	Input pins for external DMA transfer requests of channel 0.
	EDREQ1-A/EDREQ1-B/ EDREQ1-C	Input	Input pins for external DMA transfer requests of channel 1.
	EDACK0-A/EDACK0-B/ EDACK0-C	Output	Output pins for single address transfer acknowledge signals of channel 0.
	EDACK1-A/EDACK1-B/ EDACK1-C	Output	Output pins for single address transfer acknowledge signals of channel 1.
Interrupt	NMI	Input	Non-maskable interrupt request signal.
	IRQ0-A/IRQ0-B IRQ1-A/IRQ1-B IRQ2-A/IRQ2-B IRQ3-A/IRQ3-B IRQ4-A/IRQ4-B IRQ5-A/IRQ5-B IRQ6-A/IRQ6-B IRQ7-A/IRQ7-B IRQ8-A/IRQ8-B IRQ9-A/IRQ9-B IRQ10-A/IRQ10-B IRQ11-A/IRQ11-B IRQ12 IRQ13-A/IRQ13-B IRQ14 IRQ15-A/IRQ15-B	Input	Interrupt request signals.

Table 1.9 Pin Functions (3 / 7)

Classifications	Pin Name	I/O	Description
Multi-function timer pulse unit	MTIOC0A MTIOC0B MTIOC0C MTIOC0D	I/O	The TGRA0 to TGRD0 input capture input/output compare output/PWM output pins.
	MTIOC1A MTIOC1B	I/O	The TGRA1 and TGRB1 input capture input/output compare output/PWM output pins.
	MTIOC2A MTIOC2B	I/O	The TGRA2 and TGRB2 input capture input/output compare output/PWM output pins.
	MTIOC3A MTIOC3B-A/MTIOC3B-B MTIOC3C-A/MTIOC3C-B MTIOC3D-A/MTIOC3D-B	I/O	The TGRA3 to TGRD3 input capture input/output compare output/PWM output pins.
	MTIOC4A-A/MTIOC4A-B MTIOC4B-A/MTIOC4B-B MTIOC4C-A/MTIOC4C-B MTIOC4D-A/MTIOC4D-B	I/O	The TGRA4 and TGRB4 input capture input/output compare output/PWM output pins.
	MTIC5U-A/MTIC5U-B MTIC5V-A/MTIC5V-B MTIC5W-A/MTIC5W-B	Input	The TGRU5, TGRV5, and TGRW5 input capture input/dead time compensation input pins.
	MTIOC6A MTIOC6B MTIOC6C MTIOC6D	I/O	The TGRA6 to TGRD6 input capture input/output compare output/PWM output pins.
	MTIOC7A MTIOC7B	I/O	The TGRA7 and TGRB7 input capture input/output compare output/PWM output pins.
	MTIOC8A MTIOC8B	I/O	The TGRA8 and TGRB8 input capture input/output compare output/PWM output pins.
	MTIOC9A MTIOC9B MTIOC9C MTIOC9D	I/O	The TGRA9 to TGRD9 input capture input/output compare output/PWM output pins.
	MTIOC10A MTIOC10B MTIOC10C MTIOC10D	I/O	The TGRA10 to TGRB10 input capture input/output compare output/PWM output pins.
	MTIC11U-A/MTIC11U-B MTIC11V-A/MTIC11V-B MTIC11W-A/MTIC11W-B	Input	The TGRU11, TGRV11, and TGRW11 input capture input/dead time compensation input pins.
	MTCLKA-A/MTCLKA-B MTCLKB-A/MTCLKB-B MTCLKC-A/MTCLKC-B MTCLKD-A/MTCLKD-B MTCLKE-A/MTCLKE-B MTCLKF-A/MTCLKF-B MTCLKG-A/MTCLKG-B MTCLKH-A/MTCLKH-B	Input	Input pins for external clock signals.
Port output enable	POE0# to POE9#	Input	Input pins for request signals to place the MTU large-current pin in the high impedance state.
Programmable pulse generator	PO0 to PO31	Output	Output pins for the pulse signals.

Table 1.9 Pin Functions (4 / 7)

Classifications	Pin Name	I/O	Description
8-bit timer	TMO0 to TMO3	Output	Output pins for the compare match signals.
	TMCI0-A/TMCI0-B TMCI1-A/TMCI1-B TMCI2-A/TMCI2-B TMCI3-A/TMCI3-B	Input	Input pins for the external clock signals that drive for the counters.
	TMRI0-A/TMRI0-B TMRI1 TMRI2 TMRI3-A/TMRI3-B	Input	Input pins for the counter-reset signals.
Watchdog timer	WDTOVF#	Output	Output pin for the counter-overflow signal in watchdog-timer mode.
Serial communications interface	TxD0 TxD1-A/TxD1-B TxD2-A/TxD2-B TxD3-A/TxD3-B TxD5 TxD6-A/TxD6-B	Output	Output pins for data transmission.
	RxD0 RxD1-A/RxD1-B RxD2-A/RxD2-B RxD3-A/RxD3-B RxD5 RxD6-A/RxD6-B	Input	Input pins for data reception.
	SCK0 SCK1-A/SCK1-B SCK2-A/SCK2-B SCK3-A/SCK3-B SCK5 SCK6-A/SCK6-B	I/O	Input/output pins for clock signals.
I^2C bus interface	SCL0, SCL1	I/O	Input/output pins for I^2C bus interface clocks. Bus can be directly driven by the NMOS open drain output.
	SDA0, SDA1	I/O	Input/output pins for I^2C bus interface data. Bus can be directly driven by the NMOS open drain output.

Table 1.9 Pin Functions (5 / 7)

Classifications	Pin Name	I/O	Description
Ethernet controller	REF50CK	Input	50-MHz reference clock. This pin inputs reference signals for transmission/reception timings in RMII mode.
	RMII_CRS_DV	Input	Indicates that there are carrier detection signals and valid receive data on RMII_RXD1 and RMII_RXD0 in RMII mode.
	RMII_TXD0, RMII_TXD1	Output	2-bit transmit data in RMII mode.
	RMII_RXD0, RMII_RXD1	Input	2-bit receive data in RMII mode.
	RMII_TXD_EN	Output	Output pin for data transmit enable signals in RMII mode.
	RMII_RX_ER	Input	Indicates an error has occurred during reception of data in RMII mode.
	ET_CRS	Input	Carrier detection/data reception enable pin.
	ET_RX_DV	Input	Indicates that there are valid receive data on ET_ERXD3 to ET_ERXD0.
	ET_EXOUT	Output	General-purpose external output pin.
	ET_LINKSTA	Input	Inputs link status from the PHY-LSI.
	ET_ETXD0 to ET_ETXD3	Output	4 bits of MII transmit data.
	ET_ERXD0 to ET_ERXD3	Input	4 bits of MII receive data.
	ET_TX_EN	Output	Transmit enable pin. Indicates that transmit data is ready on ET_ETXD3 to ET_ETXD0.
	ET_TX_ER	Output	Transmit error pin. Notifies the PHY_LSI of an error during transmission.
	ET_RX_ER	Input	Receive error pin. Recognizes an error during reception.
	ET_TX_CLK	Input	Transmit clock pin. This pin inputs reference signals for output timings from ET_TX_EN, ET_ETXD3 to ET_ETXD0, and ET_TX_ER.
	ET_RX_CLK	Input	Receive clock pin. This pin inputs reference signals for input timings to ET_RX_DV, ET_ERXD3 to ET_ERXD0, and ET_RX_ER.
	ET_COL	Input	Inputs collision detection signals.
	ET_WOL	Output	Receives Magic Packets™
	ET_MDC	Output	Outputs reference clock signals for information transfer via ET_MDIO.
	ET_MDIO	I/O	These pins carry bidirectional signals for the exchange of management information between the RX62N Group and the PHY-LSI.

Table 1.9 Pin Functions (6 / 7)

Classifications	Pin Name	I/O	Description
USB 2.0 host/function module	VCC_USB	Input	Power-supply pin for the USB. Connect this pin to the system power supply even when the USB is not to be used.
	VSS_USB	Input	Ground pin for the USB. Connect this pin to the system power supply (0 V) even when the USB is not to be used.
	USB0_DP USB1_DP	I/O	Inputs or outputs D+ data for the USB bus.
	USB0_DM USB1_DM	I/O	Inputs or outputs D- data for the USB bus.
	USB0_DPRPD USB1_DPRPD	Output	Enable D+ pull-down.
	USB0_DRPD USB1_DRPD	Output	Enable D- pull-down.
	USB0_EXICEN USB1_EXICEN	Output	Connect these pins to the OTG power supply IC.
	USB0_ID USB1_ID	Input	Connect these pins to the OTG power supply IC.
	USB0_VBUSEN-A/ USB0_VBUSEN-B USB1_VBUSEN-A/ USB1_VBUSEN-B	Output	VBUS power enable pins for the USB.
	USB0_DPUPE-A/ USB0_DPUPE-B USB1_DPUPE-A/ USB1_DPUPE-B	Output	Pull-up pins for the USB.
	USB0_OVRCURA/ USB0_OVRCURB USB1_OVRCURA/ USB1_OVRCURB	Input	Over current pins for the USB.
	USB0_VBUS USB1_VBUS	Input	Input pins for detection of connection and disconnection of the USB cable.
CAN module	CRX0	Input	Input pins for the CAN.
	CTX0	Output	Output pins for the CAN.
Serial peripheral interfaces	RSPCKA-A/ RSPCKA-B	I/O	Clock input/output pins for the RSPI.
	RSPCKB-A/ RSPCKB-B	I/O	Clock input/output pins for the RSPI
	MOSIA-A/MOSIA-B MOSIB-A/MOSIB-B	I/O	Input or output data output from the master for the RSPI.
	MISOA-A/MISOA-B MISOB-A/MISOB-B	I/O	Input or output data output from the slave for the RSPI.
	SSLA0-A/SSLA0-B	I/O	Select the slave for the RSPI.
	SSLA1-A/SSLA1-B SSLA2-A/SSLA2-B SSLA3-A/SSLA3-B	Output	
	SSLB0-A/SSLB0-B	I/O	
	SSLB1-A/SSLB1-B SSLB2-A/SSLB2-B SSLB3-A/SSLB3-B	Output	
Realtime clock	RTCOUT	Output	Output pin for 1-Hz clock.
A/D converter	AN0 to AN7	Input	Input pins for the analog signals to be processed by the A/D converter.
	ADTRG0#-A/ADTRG0#-B ADTRG1#	Input	Input pins for the external trigger signals that start the A/D conversion.
D/A converter	DA0, DA1	Output	Output pins for the analog signals from the D/A converter.

Table 1.9 Pin Functions (7 / 7)

Classifications	Pin Name	I/O	Description
Analog power supply	AVCC	Input	Analog power supply pin for the A/D and D/A converters. When the A/D and D/A converters are not in use, connect this pin to the system power supply.
	AVSS	Input	Ground pin for the A/D and D/A converters. Connect this pin to the system power supply (0 V).
	VREFH	Input	Reference power supply pin for the A/D and D/A converters. When the A/D and D/A converters are not in use, connect this pin to the system power supply.
	VREFL	Input	Reference ground pin for the A/D and D/A converters. Make sure to connect this pin to the analog reference power supply (0 V). When the A/D and D/A converters are not in use, connect this pin to the system power supply (0 V).
I/O ports	P00 to P03, P05, P07	I/O	6-bit input/output pins.
	P10 to P17	I/O	8-bit input/output pins.
	P20 to P27	I/O	8-bit input/output pins.
	P30 to P34	I/O	5-bit input/output pins.
	P35	Input	1-bit input pin.
	P40 to P47	I/O	8-bit input/output pins.
	P50 to P52, P54 to P57	I/O	7-bit input/output pins.
	P53	Input	1-bit input pin.
	P60 to P67	I/O	8-bit input/output pins.
	P70 to P77	I/O	8-bit input/output pins.
	P80 to P85	I/O	6-bit input/output pins.
	P90 to P97	I/O	8-bit input/output pins.
	PA0 to PA7	I/O	8-bit input/output pins.
	PB0 to PB7	I/O	8-bit input/output pins.
	PC0 to PC7	I/O	8-bit input/output pins.
	PD0 to PD7	I/O	8-bit input/output pins.
	PE0 to PE7	I/O	8-bit input/output pins.
	PF0 to PF4	I/O	5-bit input/output pins.
	PG0 to PG7	I/O	8-bit input/output pins.

2. CPU

The RX CPU has sixteen general-purpose registers, nine control registers, and one accumulator used for DSP instructions.

General-purpose register

b31 b0

R0 (SP) *
R1
R2
R3
R4
R5
R6
R7
R8
R9
R10
R11
R12
R13
R14
R15

Control register

b31 b0

ISP	(Interrupt stack pointer)
USP	(User stack pointer)
INTB	(Interrupt table register)
PC	(Program counter)
PSW	(Processor status word)
BPC	(Backup PC)
BPSW	(Backup PSW)
FINTV	(Fast interrupt vector register)
FPSW	(Floating-point status word)

DSP instruction register

b63 b16 b15 b0

ACC (Accumulator)

Note: * The stack pointer (SP) can be the interrupt stack pointer (ISP) or user stack pointer (USP), according to the value of the U bit in the PSW.

Figure 2.1 Register Set of the CPU

2.1 General-Purpose Registers (R0 to R15)

This CPU has sixteen general-purpose registers (R0 to R15). R1 to R15 can be used as data registers or address registers.

R0, a general-purpose register, also functions as the stack pointer (SP). The stack pointer is switched to operate as the interrupt stack pointer (ISP) or user stack pointer (USP) by the value of the stack pointer select bit (U) in the processor status word (PSW).

2.2 Control Registers

(1) Interrupt Stack Pointer (ISP)/User Stack Pointer (USP)

The stack pointer (SP) can be either of two types, the interrupt stack pointer (ISP) or the user stack pointer (USP). Whether the stack pointer operates as the ISP or USP depends on the value of the stack pointer select bit (U) in the processor status word (PSW).

Set the ISP or USP to a multiple of four, as this reduces the numbers of cycles required to execute interrupt sequences and instructions entailing stack manipulation.

(2) Interrupt Table Register (INTB)

The interrupt table register (INTB) specifies the address where the relocatable vector table starts.

Set INTB to a multiple of four.

(3) Program Counter (PC)

The program counter (PC) indicates the address of the instruction being executed.

(4) Processor Status Word (PSW)

The processor status word (PSW) indicates results of instruction execution or the state of the CPU.

(5) Backup PC (BPC)

The backup PC (BPC) is provided to speed up response to interrupts.

After a fast interrupt has been generated, the contents of the program counter (PC) are saved in the BPC.

(6) Backup PSW (BPSW)

The backup PSW (BPSW) is provided to speed up response to interrupts.

After a fast interrupt has been generated, the contents of the processor status word (PSW) are saved in the BPSW. The allocation of bits in the BPSW corresponds to that in the PSW.

(7) Fast Interrupt Vector Register (FINTV)

The fast interrupt vector register (FINTV) is provided to speed up response to interrupts.

The FINTV register specifies a branch destination address when a fast interrupt has been generated.

(8) Floating-Point Status Word (FPSW)

The floating-point status word (FPSW) indicates the results of floating-point operations.

When an exception handling enable bit (Ej) enables the exception handling (Ej = 1), the exception cause can be identified by checking the corresponding Cj flag in the exception handling routine. If the exception handling is masked (Ej = 0), the occurrence of exception can be checked by reading the Fj flag at the end of a series of processing. Once the Fj flag has been set to 1, this value is retained until it is cleared to 0 by software (j = X, U, Z, O, or V).

(9) Accumulator (ACC)

The accumulator (ACC) is a 64-bit register used for DSP instructions. The accumulator is also used for the multiply and multiply-and-accumulate instructions; EMUL, EMULU, FMUL, MUL, and RMPA, in which case the prior value in the accumulator is modified by execution of the instruction.

Use the MVTACHI and MVTACLO instructions for writing to the accumulator. The MVTACHI and MVTACLO instructions write data to the higher-order 32 bits (bits 63 to 32) and the lower-order 32 bits (bits 31 to 0), respectively.

Use the MVFACHI and MVFACMI instructions for reading data from the accumulator. The MVFACHI and MVFACMI instructions read data from the higher-order 32 bits (bits 63 to 32) and the middle 32 bits (bits 47 to 16), respectively.

3. Address Space

3.1 Address Space

This LSI has a 4-Gbyte address space, consisting of the range of addresses from 0000 0000h to FFFF FFFFh. That is, linear access to an address space of up to 4 Gbytes is possible, and this contains both program and data areas.

Figure 3.1 shows the memory maps in the respective operating modes. Accessible areas will differ according to the operating mode and states of control bits.

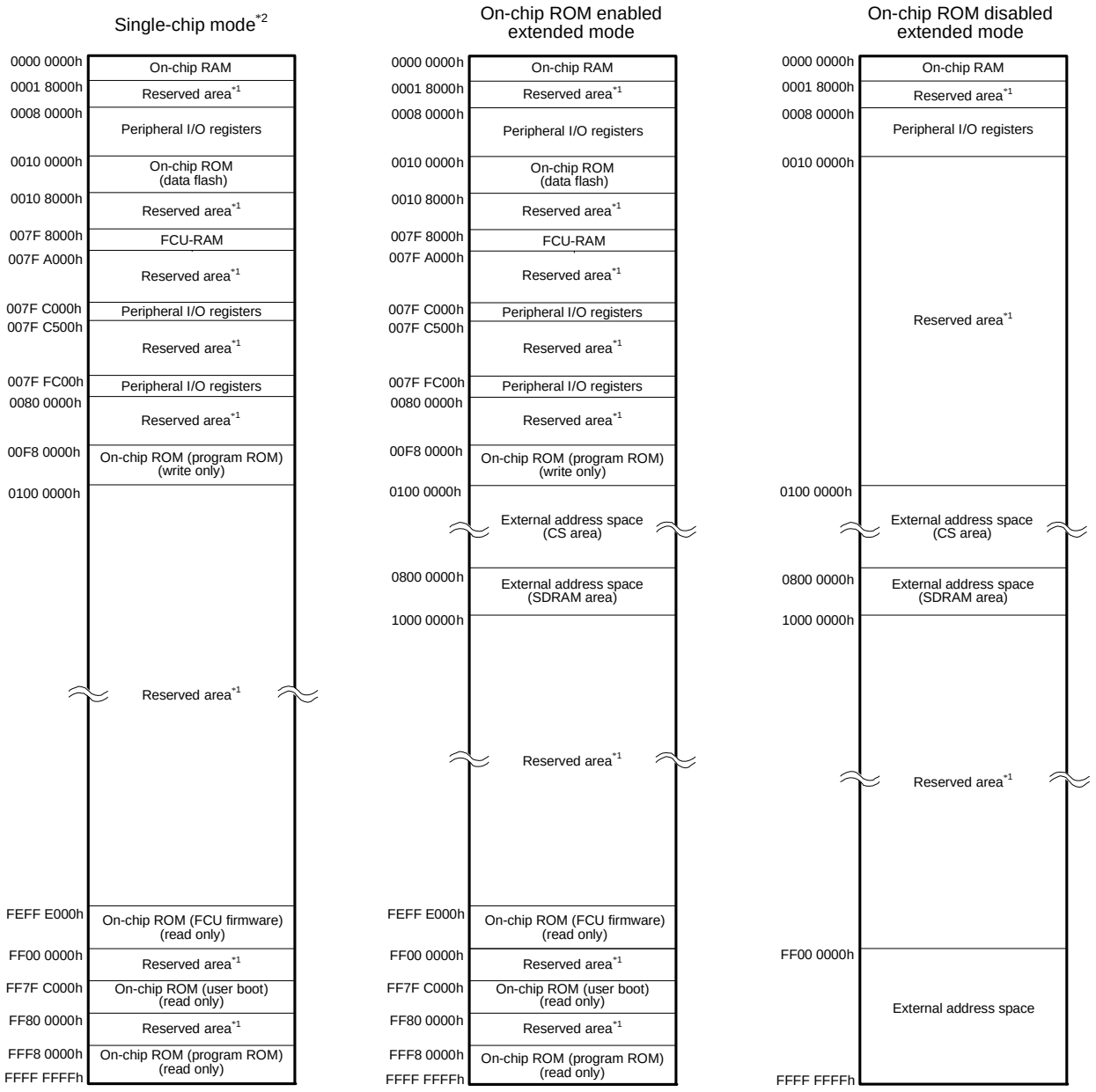

Note 1. Rserved areas should not be accessed, since the correct operation of LSI is not guaranteed if they are accessed.
Note 2. The address space in boot mode and user boot mode is the same as the address space in single-chip mode.

Figure 3.1 Memory Map in Each Operating Mode

3.2 External Address Space

The external address space is classified into CS areas (CS0 to CS7) and SDRAM area (SDCS).

The CS area is divided into up to 8 areas (CS0 to CS7), each corresponding to the CSi# signal output from a CSi# (i = 0 to 7) pin.

Figure 3.2 shows the address ranges corresponding to the individual CS areas (CS0 to CS7) and SDRAM area (SDCS) in on-chip ROM disabled extended mode.

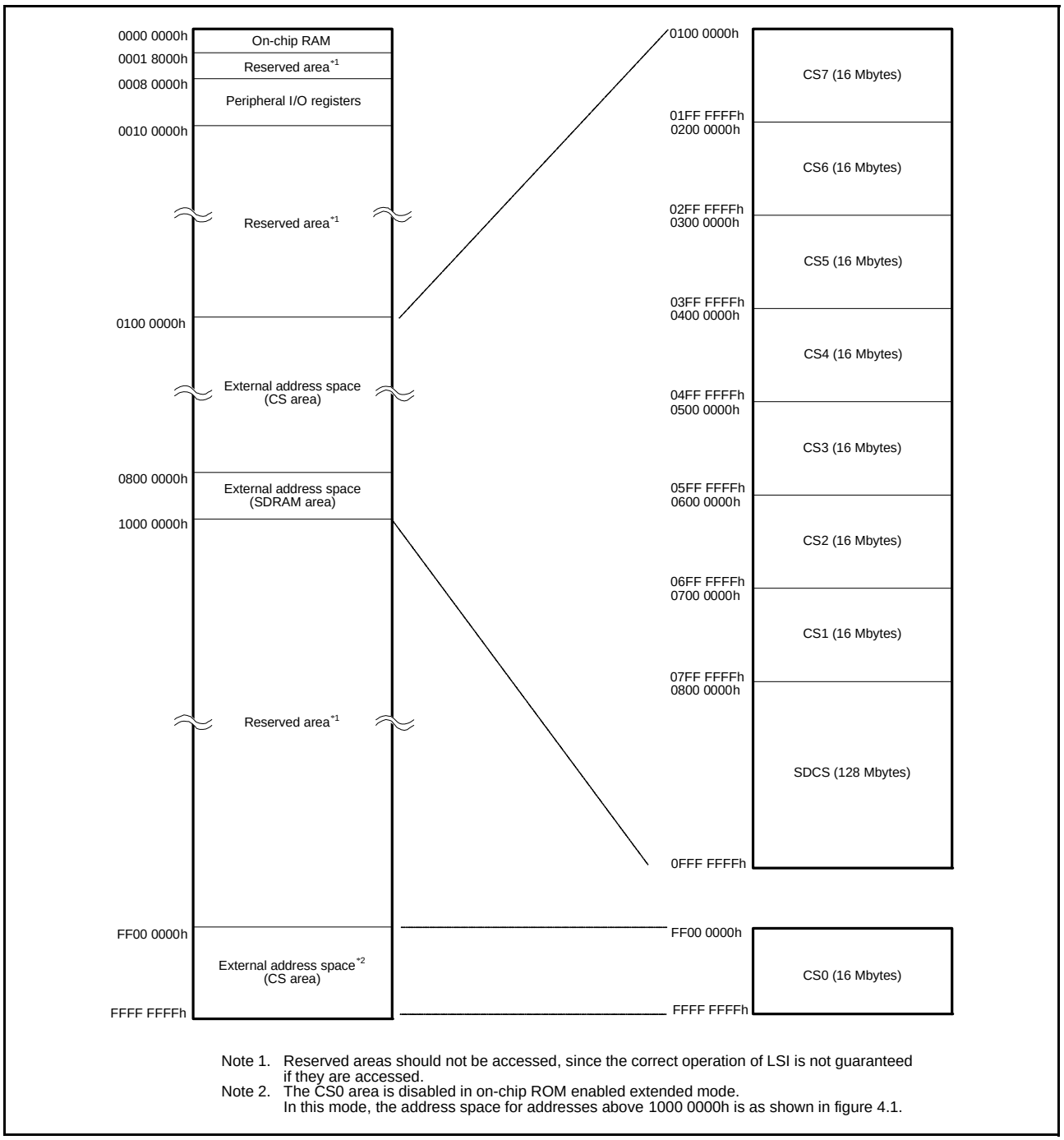

Note 1. Reserved areas should not be accessed, since the correct operation of LSI is not guaranteed if they are accessed.
Note 2. The CS0 area is disabled in on-chip ROM enabled extended mode.
In this mode, the address space for addresses above 1000 0000h is as shown in figure 4.1.

Figure 3.2 Correspondence between External Address Spaces, CS Areas (CS0 to CS7), and SDRAM area (SDCS) (In On-Chip ROM Disabled Extended Mode)

4. I/O Registers

Table 4.1 List of I/O Registers (Address Order) (1 / 36)

Address	Module Abbreviation	Register Name	Register Abbreviation	Number of Bits	Access Size	Number of Access Cycles
0008 0000h	SYSTEM	Mode monitor register	MDMONR	16	16	3 ICLK
0008 0002h	SYSTEM	Mode status register	MDSR	16	16	3 ICLK
0008 0006h	SYSTEM	System control register 0	SYSCR0	16	16	3 ICLK
0008 0008h	SYSTEM	System control register 1	SYSCR1	16	16	3 ICLK
0008 000Ch	SYSTEM	Standby control register	SBYCR	16	16	3 ICLK
0008 0010h	SYSTEM	Module stop control register A	MSTPCRA	32	32	3 ICLK
0008 0014h	SYSTEM	Module stop control register B	MSTPCRB	32	32	3 ICLK
0008 0018h	SYSTEM	Module stop control register C	MSTPCRC	32	32	3 ICLK
0008 0020h	SYSTEM	System clock control register	SCKCR	32	32	3 ICLK
0008 0030h	SYSTEM	External bus clock control register	BCKCR	8	8	3 ICLK
0008 0040h	SYSTEM	Oscillation stop detection control register	OSTDCR	16	16	3 ICLK
0008 1300h	BSC	Bus error status clear register	BERCLR	8	8	2 ICLK
0008 1304h	BSC	Bus error monitoring enable register	BEREN	8	8	2 ICLK
0008 1308h	BSC	Bus error status register 1	BERSR1	8	8	2 ICLK
0008 130Ah	BSC	Bus error status register 2	BERSR2	16	16	2 ICLK
0008 2000h	DMAC0	DMA source address register	DMSAR	32	32	2 ICLK
0008 2004h	DMAC0	DMA destination address register	DMDAR	32	32	2 ICLK
0008 2008h	DMAC0	DMA transfer count register	DMCRA	32	32	2 ICLK
0008 200Ch	DMAC0	DMA block transfer count register	DMCRB	16	16	2 ICLK
0008 2010h	DMAC0	DMA transfer mode register	DMTMD	16	16	2 ICLK
0008 2013h	DMAC0	DMA interrupt setting register	DMINT	8	8	2 ICLK
0008 2014h	DMAC0	DMA address mode register	DMAMD	16	16	2 ICLK
0008 2018h	DMAC0	DMA offset register	DMOFR	32	32	2 ICLK
0008 201Ch	DMAC0	MA transfer enable register	DMCNT	8	8	2 ICLK
0008 201Dh	DMAC0	DMA software start register	DMREQ	8	8	2 ICLK
0008 201Eh	DMAC0	DMA status register	DMSTS	8	8	2 ICLK
0008 201Fh	DMAC0	DMA activation source flag control register	DMCSL	8	8	2 ICLK
0008 2040h	DMAC1	DMA source address register	DMSAR	32	32	2 ICLK
0008 2044h	DMAC1	DMA destination address register	DMDAR	32	32	2 ICLK
0008 2048h	DMAC1	DMA transfer count register	DMCRA	32	32	2 ICLK
0008 204Ch	DMAC1	DMA block transfer count register	DMCRB	16	16	2 ICLK
0008 2050h	DMAC1	DMA transfer mode register	DMTMD	16	16	2 ICLK
0008 2053h	DMAC1	DMA interrupt setting register	DMINT	8	8	2 ICLK
0008 2054h	DMAC1	DMA address mode register	DMAMD	16	16	2 ICLK
0008 205Ch	DMAC1	MA transfer enable register	DMCNT	8	8	2 ICLK
0008 205Dh	DMAC1	DMA software start register	DMREQ	8	8	2 ICLK
0008 205Eh	DMAC1	DMA status register	DMSTS	8	8	2 ICLK
0008 205Fh	DMAC1	DMA activation source flag control register	DMCSL	8	8	2 ICLK
0008 2080h	DMAC2	DMA source address register	DMSAR	32	32	2 ICLK
0008 2084h	DMAC2	DMA destination address register	DMDAR	32	32	2 ICLK
0008 2088h	DMAC2	DMA transfer count register	DMCRA	32	32	2 ICLK

Table 4.1 List of I/O Registers (Address Order) (2 / 36)

Address	Module Abbreviation	Register Name	Register Abbreviation	Number of Bits	Access Size	Number of Access Cycles
0008 208Ch	DMAC2	DMA block transfer count register	DMCRB	16	16	2 ICLK
0008 2090h	DMAC2	DMA transfer mode register	DMTMD	16	16	2 ICLK
0008 2093h	DMAC2	DMA interrupt setting register	DMINT	8	8	2 ICLK
0008 2094h	DMAC2	DMA address mode register	DMAMD	16	16	2 ICLK
0008 209Ch	DMAC2	DMA transfer enable register	DMCNT	8	8	2 ICLK
0008 209Dh	DMAC2	DMA software start register	DMREQ	8	8	2 ICLK
0008 209Eh	DMAC2	DMA status register	DMSTS	8	8	2 ICLK
0008 209Fh	DMAC2	DMA activation source flag control register	DMCSL	8	8	2 ICLK
0008 20C0h	DMAC3	DMA source address register	DMSAR	32	32	2 ICLK
0008 20C4h	DMAC3	DMA destination address register	DMDAR	32	32	2 ICLK
0008 20C8h	DMAC3	DMA transfer count register	DMCRA	32	32	2 ICLK
0008 20CCh	DMAC3	DMA block transfer count register	DMCRB	16	16	2 ICLK
0008 20D0h	DMAC3	DMA transfer mode register	DMTMD	16	16	2 ICLK
0008 20D3h	DMAC3	DMA interrupt setting register	DMINT	8	8	2 ICLK
0008 20D4h	DMAC3	DMA address mode register	DMAMD	16	16	2 ICLK
0008 20DCh	DMAC3	DMA transfer enable register	DMCNT	8	8	2 ICLK
0008 20DDh	DMAC3	DMA software start register	DMREQ	8	8	2 ICLK
0008 20DEh	DMAC3	DMA status register	DMSTS	8	8	2 ICLK
0008 20DFh	DMAC3	DMA activation source flag control register	DMCSL	8	8	2 ICLK
0008 2200h	DMAC	DMACA start register	DMAST	8	8	2 ICLK
0008 2400h	DTC	DTC control register	DTCCR	8	8	2 ICLK
0008 2404h	DTC	DTC vector base register	DTCVBR	32	32	2 ICLK
0008 2408h	DTC	DTC address mode register	DTCADMOD	8	8	2 ICLK
0008 240Ch	DTC	DTC module start register	DTCST	8	8	2 ICLK
0008 240Eh	DTC	DTC status register	DTCSTS	16	16	2 ICLK
0008 2800h	EXDMAC0	EXDMA source address register	EDMSAR	32	32	1 to 2 BCLK*8
0008 2804h	EXDMAC0	EXDMA destination address register	EDMDAR	32	32	1 to 2 BCLK*8
0008 2808h	EXDMAC0	EXDMA transfer count register	EDMCRA	32	32	1 to 2 BCLK*8
0008 280Ch	EXDMAC0	EXDMA block transfer count register	EDMCRB	16	16	1 to 2 BCLK*8
0008 2810h	EXDMAC0	EXDMA transfer mode register	EDMTMD	16	16	1 to 2 BCLK*8
0008 2812h	EXDMAC0	EXDMA output setting register	EDMOMD	8	8	1 to 2 BCLK*8
0008 2813h	EXDMAC0	EXDMA interrupt setting register	EDMINT	8	8	1 to 2 BCLK*8
0008 2814h	EXDMAC0	EXDMA address mode register	EDMAMD	32	32	1 to 2 BCLK*8
0008 2818h	EXDMAC0	EXDMA output setting register	EDMOFR	32	32	1 to 2 BCLK*8
0008 281Ch	EXDMAC0	EXDMA transfer enable register	EDMCNT	8	8	1 to 2 BCLK*8
0008 281Dh	EXDMAC0	EXDMA software start register	EDMREQ	8	8	1 to 2 BCLK*8
0008 281Eh	EXDMAC0	EXDMA status register	EDMSTS	8	8	1 to 2 BCLK*8
0008 2820h	EXDMAC0	EXDMA external request sense mode register	EDMRMD	8	8	1 to 2 BCLK*8
0008 2821h	EXDMAC0	EXDMA external request flag register	EDMERF	8	8	1 to 2 BCLK*8
0008 2822h	EXDMAC0	EXDMA peripheral request flag register	EDMPRF	8	8	1 to 2 BCLK*8
0008 2840h	EXDMAC1	EXDMA source address register	EDMSAR	32	32	1 to 2 BCLK*8
0008 2844h	EXDMAC1	EXDMA destination address register	EDMDAR	32	32	1 to 2 BCLK*8
0008 2848h	EXDMAC1	EXDMA transfer count register	EDMCRA	32	32	1 to 2 BCLK*8

Table 4.1 List of I/O Registers (Address Order) (3 / 36)

Address	Module Abbreviation	Register Name	Register Abbreviation	Number of Bits	Access Size	Number of Access Cycles
0008 284Ch	EXDMAC1	EXDMA block transfer count register	EDMCRB	16	16	1 to 2 BCLK*8
0008 2850h	EXDMAC1	EXDMA transfer mode register	EDMTMD	16	16	1 to 2 BCLK*8
0008 2852h	EXDMAC1	EXDMA output setting register	EDMOMD	8	8	1 to 2 BCLK*8
0008 2853h	EXDMAC1	EXDMA interrupt setting register	EDMINT	8	8	1 to 2 BCLK*8
0008 2854h	EXDMAC1	EXDMA address mode register	EDMAMD	32	32	1 to 2 BCLK*8
0008 285Ch	EXDMAC1	EXDMA transfer enable register	EDMCNT	8	8	1 to 2 BCLK*8
0008 285Dh	EXDMAC1	EXDMA software start register	EDMREQ	8	8	1 to 2 BCLK*8
0008 285Eh	EXDMAC1	EXDMA status register	EDMSTS	8	8	1 to 2 BCLK*8
0008 2860h	EXDMAC1	EXDMA external request sense mode register	EDMRMD	8	8	1 to 2 BCLK*8
0008 2861h	EXDMAC1	EXDMA external request flag register	EDMERF	8	8	1 to 2 BCLK*8
0008 2862h	EXDMAC1	EXDMA peripheral request flag register	EDMPRF	8	8	1 to 2 BCLK*8
0008 2A00h	EXDMAC	EXDMA module start register	EDMAST	8	8	1 to 2 BCLK*8
0008 2BE0h	EXDMAC	Cluster buffer register 0	CLSBR0	32	32	1 to 2 BCLK*8
0008 2BE4h	EXDMAC	Cluster buffer register 1	CLSBR1	32	32	1 to 2 BCLK*8
0008 2BE8h	EXDMAC	Cluster buffer register 2	CLSBR2	32	32	1 to 2 BCLK*8
0008 2BECh	EXDMAC	Cluster buffer register 3	CLSBR3	32	32	1 to 2 BCLK*8
0008 2BF0h	EXDMAC	Cluster buffer register 4	CLSBR4	32	32	1 to 2 BCLK*8
0008 2BF4h	EXDMAC	Cluster buffer register 5	CLSBR5	32	32	1 to 2 BCLK*8
0008 2BF8h	EXDMAC	Cluster buffer register 6	CLSBR6	32	32	1 to 2 BCLK*8
0008 3002h	BSC	CS0 mode register	CS0MOD	16	16	1 to 2 BCLK*8
0008 3004h	BSC	CS0 wait control register 1	CS0WCR1	32	32	1 to 2 BCLK*8
0008 3008h	BSC	CS0 wait control register 2	CS0WCR2	32	32	1 to 2 BCLK*8
0008 3012h	BSC	CS1 mode register	CS1MOD	16	16	1 to 2 BCLK*8
0008 3014h	BSC	CS1 wait control register 1	CS1WCR1	32	32	1 to 2 BCLK*8
0008 3018h	BSC	CS1 wait control register 2	CS1WCR2	32	32	1 to 2 BCLK*8
0008 3022h	BSC	CS2 mode register	CS2MOD	16	16	1 to 2 BCLK*8
0008 3024h	BSC	CS2 wait control register 1	CS2WCR1	32	32	1 to 2 BCLK*8
0008 3028h	BSC	CS2 wait control register 2	CS2WCR2	32	32	1 to 2 BCLK*8
0008 3032h	BSC	CS3 mode register	CS3MOD	16	16	1 to 2 BCLK*8
0008 3034h	BSC	CS3 wait control register 1	CS3WCR1	32	32	1 to 2 BCLK*8
0008 3038h	BSC	CS3 wait control register 2	CS3WCR2	32	32	1 to 2 BCLK*8
0008 3042h	BSC	CS4 mode register	CS4MOD	16	16	1 to 2 BCLK*8
0008 3044h	BSC	CS4 wait control register 1	CS4WCR1	32	32	1 to 2 BCLK*8
0008 3048h	BSC	CS4 wait control register 2	CS4WCR2	32	32	1 to 2 BCLK*8
0008 3052h	BSC	CS5 mode register	CS5MOD	16	16	1 to 2 BCLK*8
0008 3054h	BSC	CS5 wait control register 1	CS5WCR1	32	32	1 to 2 BCLK*8
0008 3058h	BSC	CS5 wait control register 2	CS5WCR2	32	32	1 to 2 BCLK*8
0008 3062h	BSC	CS6 mode register	CS6MOD	16	16	1 to 2 BCLK*8
0008 3064h	BSC	CS6 wait control register 1	CS6WCR1	32	32	1 to 2 BCLK*8
0008 3068h	BSC	CS6 wait control register 2	CS6WCR2	32	32	1 to 2 BCLK*8
0008 3072h	BSC	CS7 mode register	CS7MOD	16	16	1 to 2 BCLK*8
0008 3074h	BSC	CS7 wait control register 1	CS7WCR1	32	32	1 to 2 BCLK*8
0008 3078h	BSC	CS7 wait control register 2	CS7WCR2	32	32	1 to 2 BCLK*8
0008 3802h	BSC	CS0 control register	CS0CR	16	16	1 to 2 BCLK*8

Table 4.1 List of I/O Registers (Address Order) (4 / 36)

Address	Module Abbreviation	Register Name	Register Abbreviation	Number of Bits	Access Size	Number of Access Cycles
0008 380Ah	BSC	CS0 recovery cycle register	CS0REC	16	16	1 to 2 BCLK*8
0008 3812h	BSC	CS1 control register	CS1CR	16	16	1 to 2 BCLK*8
0008 381Ah	BSC	CS1 recovery cycle register	CS1REC	16	16	1 to 2 BCLK*8
0008 3822h	BSC	CS2 control register	CS2CR	16	16	1 to 2 BCLK*8
0008 382Ah	BSC	CS2 recovery cycle register	CS2REC	16	16	1 to 2 BCLK*8
0008 3832h	BSC	CS3 control register	CS3CR	16	16	1 to 2 BCLK*8
0008 383Ah	BSC	CS3 recovery cycle register	CS3REC	16	16	1 to 2 BCLK*8
0008 3842h	BSC	CS4 control register	CS4CR	16	16	1 to 2 BCLK*8
0008 384Ah	BSC	CS4 recovery cycle register	CS4REC	16	16	1 to 2 BCLK*8
0008 3852h	BSC	CS5 control register	CS5CR	16	16	1 to 2 BCLK*8
0008 385Ah	BSC	CS5 recovery cycle register	CS5REC	16	16	1 to 2 BCLK*8
0008 3862h	BSC	CS6 control register	CS6CR	16	16	1 to 2 BCLK*8
0008 386Ah	BSC	CS6 recovery cycle register	CS6REC	16	16	1 to 2 BCLK*8
0008 3872h	BSC	CS7 control register	CS7CR	16	16	1 to 2 BCLK*8
0008 387Ah	BSC	CS7 recovery cycle register	CS7REC	16	16	1 to 2 BCLK*8
0008 3C00h	BSC	SDC control register	SDCCR	8	8	1 to 2 BCLK*8
0008 3C01h	BSC	SDC mode register	SDCMOD	8	8	1 to 2 BCLK*8
0008 3C02h	BSC	SDRAM access mode register	SDAMOD	8	8	1 to 2 BCLK*8
0008 3C10h	BSC	SDRAM self-refresh control register	SDSELF	8	8	1 to 2 BCLK*8
0008 3C14h	BSC	SDRAM refresh control register	SDRFCR	16	16	1 to 2 BCLK*8
0008 3C16h	BSC	SDRAM auto-refresh control register	SDRFEN	8	8	1 to 2 BCLK*8
0008 3C20h	BSC	SDRAM initialization sequence control register	SDICR	8	8	1 to 2 BCLK*8
0008 3C24h	BSC	SDRAM initialization register	SDIR	16	16	1 to 2 BCLK*8
0008 3C40h	BSC	SDRAM address register	SDADR	8	8	1 to 2 BCLK*8
0008 3C44h	BSC	SDRAM timing register	SDTR	32	32	1 to 2 BCLK*8
0008 3C48h	BSC	SDRAM mode register	SDMOD	16	16	1 to 2 BCLK*8
0008 3C50h	BSC	SDRAM status register	SDSR	8	8	1 to 2 BCLK*8
0008 6400h	MPU	Region 0 start page-number register	RSPAGE0	32	32	1 ICLK
0008 6404h	MPU	Region 0 end page-number register	REPAGE0	32	32	1 ICLK
0008 6408h	MPU	Region 1 start page-number register	RSPAGE1	32	32	1 ICLK
0008 640Ch	MPU	Region 1 end page-number register	REPAGE1	32	32	1 ICLK
0008 6410h	MPU	Region 2 start page-number register	RSPAGE2	32	32	1 ICLK
0008 6414h	MPU	Region 2 end page-number register	REPAGE2	32	32	1 ICLK
0008 6418h	MPU	Region 3 start page-number register	RSPAGE3	32	32	1 ICLK
0008 641Ch	MPU	Region 3 end page-number register	REPAGE3	32	32	1 ICLK
0008 6420h	MPU	Region 4 start page-number register	RSPAGE4	32	32	1 ICLK
0008 6424h	MPU	Region 4 end page-number register	REPAGE4	32	32	1 ICLK
0008 6428h	MPU	Region 5 start page-number register	RSPAGE5	32	32	1 ICLK
0008 642Ch	MPU	Region 5 end page-number register	REPAGE5	32	32	1 ICLK
0008 6430h	MPU	Region 6 start page-number register	RSPAGE6	32	32	1 ICLK
0008 6434h	MPU	Region 6 end page-number register	REPAGE6	32	32	1 ICLK
0008 6438h	MPU	Region 7 start page-number register	RSPAGE7	32	32	1 ICLK
0008 643Ch	MPU	Region 7 end page-number register	REPAGE7	32	32	1 ICLK
0008 6500h	MPU	Memory-protection enable register	MPEN	32	32	1 ICLK

Table 4.1 List of I/O Registers (Address Order) (5 / 36)

Address	Module Abbreviation	Register Name	Register Abbreviation	Number of Bits	Access Size	Number of Access Cycles
0008 6504h	MPU	Background access control register	MPBAC	32	32	1 ICLK
0008 6508h	MPU	Memory-protection error status-clearing register	MPECLR	32	32	1 ICLK
0008 650Ch	MPU	Memory-protection error status register	MPESTS	32	32	1 ICLK
0008 6514h	MPU	Data memory-protection error address register	MPDEA	32	32	1 ICLK
0008 6520h	MPU	Region search address register	MPSA	32	32	1 ICLK
0008 6524h	MPU	Region search operation register	MPOPS	16	16	1 ICLK
0008 6526h	MPU	Region invalidation operation register	MPOPI	16	16	1 ICLK
0008 6528h	MPU	Instruction-hit region register	MHITI	32	32	1 ICLK
0008 652Ch	MPU	Data-hit region register	MHITD	32	32	1 ICLK
0008 7010h	ICU	Interrupt request register 016	IR016	8	8	2 ICLK
0008 7015h	ICU	Interrupt request register 021	IR021	8	8	2 ICLK
0008 7017h	ICU	Interrupt request register 023	IR023	8	8	2 ICLK
0008 701Bh	ICU	Interrupt request register 027	IR027	8	8	2 ICLK
0008 701Ch	ICU	Interrupt request register 028	IR028	8	8	2 ICLK
0008 701Dh	ICU	Interrupt request register 029	IR029	8	8	2 ICLK
0008 701Eh	ICU	Interrupt request register 030	IR030	8	8	2 ICLK
0008 701Fh	ICU	Interrupt request register 031	IR031	8	8	2 ICLK
0008 7020h	ICU	Interrupt request register 032	IR032	8	8	2 ICLK
0008 7024h	ICU	Interrupt request register 036	IR036	8	8	2 ICLK
0008 7025h	ICU	Interrupt request register 037	IR037	8	8	2 ICLK
0008 7026h	ICU	Interrupt request register 038	IR038	8	8	2 ICLK
0008 7028h	ICU	Interrupt request register 040	IR040	8	8	2 ICLK
0008 7029h	ICU	Interrupt request register 041	IR041	8	8	2 ICLK
0008 702Ah	ICU	Interrupt request register 042	IR042	8	8	2 ICLK
0008 702Ch	ICU	Interrupt request register 044	IR044	8	8	2 ICLK
0008 702Dh	ICU	Interrupt request register 045	IR045	8	8	2 ICLK
0008 702Eh	ICU	Interrupt request register 046	IR046	8	8	2 ICLK
0008 702Fh	ICU	Interrupt request register 047	IR047	8	8	2 ICLK
0008 7030h	ICU	Interrupt request register 048	IR048	8	8	2 ICLK
0008 7031h	ICU	Interrupt request register 049	IR049	8	8	2 ICLK
0008 7032h	ICU	Interrupt request register 050	IR050	8	8	2 ICLK
0008 7033h	ICU	Interrupt request register 051	IR051	8	8	2 ICLK
0008 7038h	ICU	Interrupt request register 056	IR056	8	8	2 ICLK
0008 7039h	ICU	Interrupt request register 057	IR057	8	8	2 ICLK
0008 703Ah	ICU	Interrupt request register 058	IR058	8	8	2 ICLK
0008 703Bh	ICU	Interrupt request register 059	IR059	8	8	2 ICLK
0008 703Ch	ICU	Interrupt request register 060	IR060	8	8	2 ICLK
0008 703Eh	ICU	Interrupt request register 062	IR062	8	8	2 ICLK
0008 703Fh	ICU	Interrupt request register 063	IR063	8	8	2 ICLK
0008 7040h	ICU	Interrupt request register 064	IR064	8	8	2 ICLK
0008 7041h	ICU	Interrupt request register 065	IR065	8	8	2 ICLK
0008 7042h	ICU	Interrupt request register 066	IR066	8	8	2 ICLK
0008 7043h	ICU	Interrupt request register 067	IR067	8	8	2 ICLK

Table 4.1 List of I/O Registers (Address Order) (6 / 36)

Address	Module Abbreviation	Register Name	Register Abbreviation	Number of Bits	Access Size	Number of Access Cycles
0008 7044h	ICU	Interrupt request register 068	IR068	8	8	2 ICLK
0008 7045h	ICU	Interrupt request register 069	IR069	8	8	2 ICLK
0008 7046h	ICU	Interrupt request register 070	IR070	8	8	2 ICLK
0008 7047h	ICU	Interrupt request register 071	IR071	8	8	2 ICLK
0008 7048h	ICU	Interrupt request register 072	IR072	8	8	2 ICLK
0008 7049h	ICU	Interrupt request register 073	IR073	8	8	2 ICLK
0008 704Ah	ICU	Interrupt request register 074	IR074	8	8	2 ICLK
0008 704Bh	ICU	Interrupt request register 075	IR075	8	8	2 ICLK
0008 704Ch	ICU	Interrupt request register 076	IR076	8	8	2 ICLK
0008 704Dh	ICU	Interrupt request register 077	IR077	8	8	2 ICLK
0008 704Eh	ICU	Interrupt request register 078	IR078	8	8	2 ICLK
0008 704Fh	ICU	Interrupt request register 079	IR079	8	8	2 ICLK
0008 705Ah	ICU	Interrupt request register 090	IR090	8	8	2 ICLK
0008 705Bh	ICU	Interrupt request register 091	IR091	8	8	2 ICLK
0008 705Ch	ICU	Interrupt request register 092	IR092	8	8	2 ICLK
0008 7060h	ICU	Interrupt request register 096	IR096	8	8	2 ICLK
0008 7062h	ICU	Interrupt request register 098	IR098	8	8	2 ICLK
0008 7063h	ICU	Interrupt request register 099	IR099	8	8	2 ICLK
0008 7066h	ICU	Interrupt request register 102	IR102	8	8	2 ICLK
0008 7072h	ICU	Interrupt request register 114	IR114	8	8	2 ICLK
0008 7073h	ICU	Interrupt request register 115	IR115	8	8	2 ICLK
0008 7074h	ICU	Interrupt request register 116	IR116	8	8	2 ICLK
0008 7075h	ICU	Interrupt request register 117	IR117	8	8	2 ICLK
0008 7076h	ICU	Interrupt request register 118	IR118	8	8	2 ICLK
0008 7077h	ICU	Interrupt request register 119	IR119	8	8	2 ICLK
0008 7078h	ICU	Interrupt request register 120	IR120	8	8	2 ICLK
0008 7079h	ICU	Interrupt request register 121	IR121	8	8	2 ICLK
0008 707Ah	ICU	Interrupt request register 122	IR122	8	8	2 ICLK
0008 707Bh	ICU	Interrupt request register 123	IR123	8	8	2 ICLK
0008 707Ch	ICU	Interrupt request register 124	IR124	8	8	2 ICLK
0008 707Dh	ICU	Interrupt request register 125	IR125	8	8	2 ICLK
0008 707Eh	ICU	Interrupt request register 126	IR126	8	8	2 ICLK
0008 707Fh	ICU	Interrupt request register 127	IR127	8	8	2 ICLK
0008 7080h	ICU	Interrupt request register 128	IR128	8	8	2 ICLK
0008 7081h	ICU	Interrupt request register 129	IR129	8	8	2 ICLK
0008 7082h	ICU	Interrupt request register 130	IR130	8	8	2 ICLK
0008 7083h	ICU	Interrupt request register 131	IR131	8	8	2 ICLK
0008 7084h	ICU	Interrupt request register 132	IR132	8	8	2 ICLK
0008 7085h	ICU	Interrupt request register 133	IR133	8	8	2 ICLK
0008 7086h	ICU	Interrupt request register 134	IR134	8	8	2 ICLK
0008 7087h	ICU	Interrupt request register 135	IR135	8	8	2 ICLK
0008 7088h	ICU	Interrupt request register 136	IR136	8	8	2 ICLK
0008 7089h	ICU	Interrupt request register 137	IR137	8	8	2 ICLK
0008 708Ah	ICU	Interrupt request register 138	IR138	8	8	2 ICLK
0008 708Bh	ICU	Interrupt request register 139	IR139	8	8	2 ICLK

Table 4.1 List of I/O Registers (Address Order) (7 / 36)

Address	Module Abbreviation	Register Name	Register Abbreviation	Number of Bits	Access Size	Number of Access Cycles
0008 708Ch	ICU	Interrupt request register 140	IR140	8	8	2 ICLK
0008 708Dh	ICU	Interrupt request register 141	IR141	8	8	2 ICLK
0008 708Eh	ICU	Interrupt request register 142	IR142	8	8	2 ICLK
0008 708Fh	ICU	Interrupt request register 143	IR143	8	8	2 ICLK
0008 7090h	ICU	Interrupt request register 144	IR144	8	8	2 ICLK
0008 7091h	ICU	Interrupt request register 145	IR145	8	8	2 ICLK
0008 7092h	ICU	Interrupt request register 146	IR146	8	8	2 ICLK
0008 7093h	ICU	Interrupt request register 147	IR147	8	8	2 ICLK
0008 7094h	ICU	Interrupt request register 148	IR148	8	8	2 ICLK
0008 7095h	ICU	Interrupt request register 149	IR149	8	8	2 ICLK
0008 7096h	ICU	Interrupt request register 150	IR150	8	8	2 ICLK
0008 7097h	ICU	Interrupt request register 151	IR151	8	8	2 ICLK
0008 7098h	ICU	Interrupt request register 152	IR152	8	8	2 ICLK
0008 7099h	ICU	Interrupt request register 153	IR153	8	8	2 ICLK
0008 709Ah	ICU	Interrupt request register 154	IR154	8	8	2 ICLK
0008 709Bh	ICU	Interrupt request register 155	IR155	8	8	2 ICLK
0008 709Ch	ICU	Interrupt request register 156	IR156	8	8	2 ICLK
0008 709Dh	ICU	Interrupt request register 157	IR157	8	8	2 ICLK
0008 709Eh	ICU	Interrupt request register 158	IR158	8	8	2 ICLK
0008 709Fh	ICU	Interrupt request register 159	IR159	8	8	2 ICLK
0008 70A0h	ICU	Interrupt request register 160	IR160	8	8	2 ICLK
0008 70A1h	ICU	Interrupt request register 161	IR161	8	8	2 ICLK
0008 70A2h	ICU	Interrupt request register 162	IR162	8	8	2 ICLK
0008 70A3h	ICU	Interrupt request register 163	IR163	8	8	2 ICLK
0008 70A4h	ICU	Interrupt request register 164	IR164	8	8	2 ICLK
0008 70A5h	ICU	Interrupt request register 165	IR165	8	8	2 ICLK
0008 70A6h	ICU	Interrupt request register 166	IR166	8	8	2 ICLK
0008 70A7h	ICU	Interrupt request register 167	IR167	8	8	2 ICLK
0008 70A8h	ICU	Interrupt request register 168	IR168	8	8	2 ICLK
0008 70A9h	ICU	Interrupt request register 169	IR169	8	8	2 ICLK
0008 70AAh	ICU	Interrupt request register 170	IR170	8	8	2 ICLK
0008 70ABh	ICU	Interrupt request register 171	IR171	8	8	2 ICLK
0008 70ACh	ICU	Interrupt request register 172	IR172	8	8	2 ICLK
0008 70ADh	ICU	Interrupt request register 173	IR173	8	8	2 ICLK
0008 70AEh	ICU	Interrupt request register 174	IR174	8	8	2 ICLK
0008 70AFh	ICU	Interrupt request register 175	IR175	8	8	2 ICLK
0008 70B0h	ICU	Interrupt request register 176	IR176	8	8	2 ICLK
0008 70B1h	ICU	Interrupt request register 177	IR177	8	8	2 ICLK
0008 70B2h	ICU	Interrupt request register 178	IR178	8	8	2 ICLK
0008 70B3h	ICU	Interrupt request register 179	IR179	8	8	2 ICLK
0008 70B4h	ICU	Interrupt request register 180	IR180	8	8	2 ICLK
0008 70B5h	ICU	Interrupt request register 181	IR181	8	8	2 ICLK
0008 70B6h	ICU	Interrupt request register 182	IR182	8	8	2 ICLK
0008 70B7h	ICU	Interrupt request register 183	IR183	8	8	2 ICLK
0008 70B8h	ICU	Interrupt request register 184	IR184	8	8	2 ICLK

Table 4.1 List of I/O Registers (Address Order) (8 / 36)

Address	Module Abbreviation	Register Name	Register Abbreviation	Number of Bits	Access Size	Number of Access Cycles
0008 70B9h	ICU	Interrupt request register 185	IR185	8	8	2 ICLK
0008 70C6h	ICU	Interrupt request register 198	IR198	8	8	2 ICLK
0008 70C7h	ICU	Interrupt request register 199	IR199	8	8	2 ICLK
0008 70C8h	ICU	Interrupt request register 200	IR200	8	8	2 ICLK
0008 70C9h	ICU	Interrupt request register 201	IR201	8	8	2 ICLK
0008 70CAh	ICU	Interrupt request register 202	IR202	8	8	2 ICLK
0008 70CBh	ICU	Interrupt request register 203	IR203	8	8	2 ICLK
0008 70D6h	ICU	Interrupt request register 214	IR214	8	8	2 ICLK
0008 70D7h	ICU	Interrupt request register 215	IR215	8	8	2 ICLK
0008 70D8h	ICU	Interrupt request register 216	IR216	8	8	2 ICLK
0008 70D9h	ICU	Interrupt request register 217	IR217	8	8	2 ICLK
0008 70DAh	ICU	Interrupt request register 218	IR218	8	8	2 ICLK
0008 70DBh	ICU	Interrupt request register 219	IR219	8	8	2 ICLK
0008 70DCh	ICU	Interrupt request register 220	IR220	8	8	2 ICLK
0008 70DDh	ICU	Interrupt request register 221	IR221	8	8	2 ICLK
0008 70DEh	ICU	Interrupt request register 222	IR222	8	8	2 ICLK
0008 70DFh	ICU	Interrupt request register 223	IR223	8	8	2 ICLK
0008 70E0h	ICU	Interrupt request register 224	IR224	8	8	2 ICLK
0008 70E1h	ICU	Interrupt request register 225	IR225	8	8	2 ICLK
0008 70E2h	ICU	Interrupt request register 226	IR226	8	8	2 ICLK
0008 70E3h	ICU	Interrupt request register 227	IR227	8	8	2 ICLK
0008 70E4h	ICU	Interrupt request register 228	IR228	8	8	2 ICLK
0008 70E5h	ICU	Interrupt request register 229	IR229	8	8	2 ICLK
0008 70EAh	ICU	Interrupt request register 234	IR234	8	8	2 ICLK
0008 70EBh	ICU	Interrupt request register 235	IR235	8	8	2 ICLK
0008 70ECh	ICU	Interrupt request register 236	IR236	8	8	2 ICLK
0008 70EDh	ICU	Interrupt request register 237	IR237	8	8	2 ICLK
0008 70EEh	ICU	Interrupt request register 238	IR238	8	8	2 ICLK
0008 70EFh	ICU	Interrupt request register 239	IR239	8	8	2 ICLK
0008 70F0h	ICU	Interrupt request register 240	IR240	8	8	2 ICLK
0008 70F1h	ICU	Interrupt request register 241	IR241	8	8	2 ICLK
0008 70F6h	ICU	Interrupt request register 246	IR246	8	8	2 ICLK
0008 70F7h	ICU	Interrupt request register 247	IR247	8	8	2 ICLK
0008 70F8h	ICU	Interrupt request register 248	IR248	8	8	2 ICLK
0008 70F9h	ICU	Interrupt request register 249	IR249	8	8	2 ICLK
0008 70FAh	ICU	Interrupt request register 250	IR250	8	8	2 ICLK
0008 70FBh	ICU	Interrupt request register 251	IR251	8	8	2 ICLK
0008 70FCh	ICU	Interrupt request register 252	IR252	8	8	2 ICLK
0008 70FDh	ICU	Interrupt request register 253	IR253	8	8	2 ICLK
0008 711Bh	ICU	DTC activation enable register 027	DTCER027	8	8	2 ICLK
0008 711Ch	ICU	DTC activation enable register 028	DTCER028	8	8	2 ICLK
0008 711Dh	ICU	DTC activation enable register 029	DTCER029	8	8	2 ICLK
0008 711Eh	ICU	DTC activation enable register 030	DTCER030	8	8	2 ICLK
0008 711Fh	ICU	DTC activation enable register 031	DTCER031	8	8	2 ICLK
0008 7124h	ICU	DTC activation enable register 036	DTCER036	8	8	2 ICLK

Table 4.1 List of I/O Registers (Address Order) (9 / 36)

Address	Module Abbreviation	Register Name	Register Abbreviation	Number of Bits	Access Size	Number of Access Cycles
0008 7125h	ICU	DTC activation enable register 037	DTCER037	8	8	2 ICLK
0008 7128h	ICU	DTC activation enable register 040	DTCER040	8	8	2 ICLK
0008 7129h	ICU	DTC activation enable register 041	DTCER041	8	8	2 ICLK
0008 712Dh	ICU	DTC activation enable register 045	DTCER045	8	8	2 ICLK
0008 712Eh	ICU	DTC activation enable register 046	DTCER046	8	8	2 ICLK
0008 7131h	ICU	DTC activation enable register 049	DTCER049	8	8	2 ICLK
0008 7132h	ICU	DTC activation enable register 050	DTCER050	8	8	2 ICLK
0008 7140h	ICU	DTC activation enable register 064	DTCER064	8	8	2 ICLK
0008 7141h	ICU	DTC activation enable register 065	DTCER065	8	8	2 ICLK
0008 7142h	ICU	DTC activation enable register 066	DTCER066	8	8	2 ICLK
0008 7143h	ICU	DTC activation enable register 067	DTCER067	8	8	2 ICLK
0008 7144h	ICU	DTC activation enable register 068	DTCER068	8	8	2 ICLK
0008 7145h	ICU	DTC activation enable register 069	DTCER069	8	8	2 ICLK
0008 7146h	ICU	DTC activation enable register 070	DTCER070	8	8	2 ICLK
0008 7147h	ICU	DTC activation enable register 071	DTCER071	8	8	2 ICLK
0008 7148h	ICU	DTC activation enable register 072	DTCER072	8	8	2 ICLK
0008 7149h	ICU	DTC activation enable register 073	DTCER073	8	8	2 ICLK
0008 714Ah	ICU	DTC activation enable register 074	DTCER074	8	8	2 ICLK
0008 714Bh	ICU	DTC activation enable register 075	DTCER075	8	8	2 ICLK
0008 714Ch	ICU	DTC activation enable register 076	DTCER076	8	8	2 ICLK
0008 714Dh	ICU	DTC activation enable register 077	DTCER077	8	8	2 ICLK
0008 714Eh	ICU	DTC activation enable register 078	DTCER078	8	8	2 ICLK
0008 714Fh	ICU	DTC activation enable register 079	DTCER079	8	8	2 ICLK
0008 7162h	ICU	DTC activation enable register 098	DTCER098	8	8	2 ICLK
0008 7163h	ICU	DTC activation enable register 099	DTCER099	8	8	2 ICLK
0008 7166h	ICU	DTC activation enable register 102	DTCER102	8	8	2 ICLK
0008 7172h	ICU	DTC activation enable register 114	DTCER114	8	8	2 ICLK
0008 7173h	ICU	DTC activation enable register 115	DTCER115	8	8	2 ICLK
0008 7174h	ICU	DTC activation enable register 116	DTCER116	8	8	2 ICLK
0008 7175h	ICU	DTC activation enable register 117	DTCER117	8	8	2 ICLK
0008 7179h	ICU	DTC activation enable register 121	DTCER121	8	8	2 ICLK
0008 717Ah	ICU	DTC activation enable register 122	DTCER122	8	8	2 ICLK
0008 717Dh	ICU	DTC activation enable register 125	DTCER125	8	8	2 ICLK
0008 717Eh	ICU	DTC activation enable register 126	DTCER126	8	8	2 ICLK
0008 7181h	ICU	DTC activation enable register 129	DTCER129	8	8	2 ICLK
0008 7182h	ICU	DTC activation enable register 130	DTCER130	8	8	2 ICLK
0008 7183h	ICU	DTC activation enable register 131	DTCER131	8	8	2 ICLK
0008 7184h	ICU	DTC activation enable register 132	DTCER132	8	8	2 ICLK
0008 7186h	ICU	DTC activation enable register 134	DTCER134	8	8	2 ICLK
0008 7187h	ICU	DTC activation enable register 135	DTCER135	8	8	2 ICLK
0008 7188h	ICU	DTC activation enable register 136	DTCER136	8	8	2 ICLK
0008 7189h	ICU	DTC activation enable register 137	DTCER137	8	8	2 ICLK
0008 718Ah	ICU	DTC activation enable register 138	DTCER138	8	8	2 ICLK
0008 718Bh	ICU	DTC activation enable register 139	DTCER139	8	8	2 ICLK
0008 718Ch	ICU	DTC activation enable register 140	DTCER140	8	8	2 ICLK

Table 4.1 List of I/O Registers (Address Order) (10 / 36)

Address	Module Abbreviation	Register Name	Register Abbreviation	Number of Bits	Access Size	Number of Access Cycles
0008 718Dh	ICU	DTC activation enable register 141	DTCER141	8	8	2 ICLK
0008 718Eh	ICU	DTC activation enable register 142	DTCER142	8	8	2 ICLK
0008 718Fh	ICU	DTC activation enable register 143	DTCER143	8	8	2 ICLK
0008 7190h	ICU	DTC activation enable register 144	DTCER144	8	8	2 ICLK
0008 7191h	ICU	DTC activation enable register 145	DTCER145	8	8	2 ICLK
0008 7195h	ICU	DTC activation enable register 149	DTCER149	8	8	2 ICLK
0008 7196h	ICU	DTC activation enable register 150	DTCER150	8	8	2 ICLK
0008 7199h	ICU	DTC activation enable register 153	DTCER153	8	8	2 ICLK
0008 719Ah	ICU	DTC activation enable register 154	DTCER154	8	8	2 ICLK
0008 719Dh	ICU	DTC activation enable register 157	DTCER157	8	8	2 ICLK
0008 719Eh	ICU	DTC activation enable register 158	DTCER158	8	8	2 ICLK
0008 719Fh	ICU	DTC activation enable register 159	DTCER159	8	8	2 ICLK
0008 71A0h	ICU	DTC activation enable register 160	DTCER160	8	8	2 ICLK
0008 71A2h	ICU	DTC activation enable register 162	DTCER162	8	8	2 ICLK
0008 71A3h	ICU	DTC activation enable register 163	DTCER163	8	8	2 ICLK
0008 71A4h	ICU	DTC activation enable register 164	DTCER164	8	8	2 ICLK
0008 71A5h	ICU	DTC activation enable register 165	DTCER165	8	8	2 ICLK
0008 71A6h	ICU	DTC activation enable register 166	DTCER166	8	8	2 ICLK
0008 71A7h	ICU	DTC activation enable register 167	DTCER167	8	8	2 ICLK
0008 71A8h	ICU	DTC activation enable register 168	DTCER168	8	8	2 ICLK
0008 71A9h	ICU	DTC activation enable register 169	DTCER169	8	8	2 ICLK
0008 71AEh	ICU	DTC activation enable register 174	DTCER174	8	8	2 ICLK
0008 71AFh	ICU	DTC activation enable register 175	DTCER175	8	8	2 ICLK
0008 71B1h	ICU	DTC activation enable register 177	DTCER177	8	8	2 ICLK
0008 71B2h	ICU	DTC activation enable register 178	DTCER178	8	8	2 ICLK
0008 71B4h	ICU	DTC activation enable register 180	DTCER180	8	8	2 ICLK
0008 71B5h	ICU	DTC activation enable register 181	DTCER181	8	8	2 ICLK
0008 71B7h	ICU	DTC activation enable register 183	DTCER183	8	8	2 ICLK
0008 71B8h	ICU	DTC activation enable register 184	DTCER184	8	8	2 ICLK
0008 71C6h	ICU	DTC activation enable register 198	DTCER198	8	8	2 ICLK
0008 71C7h	ICU	DTC activation enable register 199	DTCER199	8	8	2 ICLK
0008 71C8h	ICU	DTC activation enable register 200	DTCER200	8	8	2 ICLK
0008 71C9h	ICU	DTC activation enable register 201	DTCER201	8	8	2 ICLK
0008 71CAh	ICU	DTC activation enable register 202	DTCER202	8	8	2 ICLK
0008 71CBh	ICU	DTC activation enable register 203	DTCER203	8	8	2 ICLK
0008 71D7h	ICU	DTC activation enable register 215	DTCER215	8	8	2 ICLK
0008 71D8h	ICU	DTC activation enable register 216	DTCER216	8	8	2 ICLK
0008 71DBh	ICU	DTC activation enable register 219	DTCER219	8	8	2 ICLK
0008 71DCh	ICU	DTC activation enable register 220	DTCER220	8	8	2 ICLK
0008 71DFh	ICU	DTC activation enable register 223	DTCER223	8	8	2 ICLK
0008 71E0h	ICU	DTC activation enable register 224	DTCER224	8	8	2 ICLK
0008 71E3h	ICU	DTC activation enable register 227	DTCER227	8	8	2 ICLK
0008 71E4h	ICU	DTC activation enable register 228	DTCER228	8	8	2 ICLK
0008 71EBh	ICU	DTC activation enable register 235	DTCER235	8	8	2 ICLK
0008 71ECh	ICU	DTC activation enable register 236	DTCER236	8	8	2 ICLK

Table 4.1 List of I/O Registers (Address Order) (11 / 36)

Address	Module Abbreviation	Register Name	Register Abbreviation	Number of Bits	Access Size	Number of Access Cycles
0008 71EFh	ICU	DTC activation enable register 239	DTCER239	8	8	2 ICLK
0008 71F0h	ICU	DTC activation enable register 240	DTCER240	8	8	2 ICLK
0008 71F7h	ICU	DTC activation enable register 247	DTCER247	8	8	2 ICLK
0008 71F8h	ICU	DTC activation enable register 248	DTCER248	8	8	2 ICLK
0008 71FBh	ICU	DTC activation enable register 251	DTCER251	8	8	2 ICLK
0008 71FCh	ICU	DTC activation enable register 252	DTCER252	8	8	2 ICLK
0008 7202h	ICU	Interrupt request enable register 02	IER02	8	8	2 ICLK
0008 7203h	ICU	Interrupt request enable register 03	IER03	8	8	2 ICLK
0008 7204h	ICU	Interrupt request enable register 04	IER04	8	8	2 ICLK
0008 7205h	ICU	Interrupt request enable register 05	IER05	8	8	2 ICLK
0008 7206h	ICU	Interrupt request enable register 06	IER06	8	8	2 ICLK
0008 7207h	ICU	Interrupt request enable register 07	IER07	8	8	2 ICLK
0008 7208h	ICU	Interrupt request enable register 08	IER08	8	8	2 ICLK
0008 7209h	ICU	Interrupt request enable register 09	IER09	8	8	2 ICLK
0008 720Bh	ICU	Interrupt request enable register 0B	IER0B	8	8	2 ICLK
0008 720Ch	ICU	Interrupt request enable register 0C	IER0C	8	8	2 ICLK
0008 720Eh	ICU	Interrupt request enable register 0E	IER0E	8	8	2 ICLK
0008 720Fh	ICU	Interrupt request enable register 0F	IER0F	8	8	2 ICLK
0008 7210h	ICU	Interrupt request enable register 10	IER10	8	8	2 ICLK
0008 7211h	ICU	Interrupt request enable register 11	IER11	8	8	2 ICLK
0008 7212h	ICU	Interrupt request enable register 12	IER12	8	8	2 ICLK
0008 7213h	ICU	Interrupt request enable register 13	IER13	8	8	2 ICLK
0008 7214h	ICU	Interrupt request enable register 14	IER14	8	8	2 ICLK
0008 7215h	ICU	Interrupt request enable register 15	IER15	8	8	2 ICLK
0008 7216h	ICU	Interrupt request enable register 16	IER16	8	8	2 ICLK
0008 7217h	ICU	Interrupt request enable register 17	IER17	8	8	2 ICLK
0008 7218h	ICU	Interrupt request enable register 18	IER18	8	8	2 ICLK
0008 7219h	ICU	Interrupt request enable register 19	IER19	8	8	2 ICLK
0008 721Ah	ICU	Interrupt request enable register 1A	IER1A	8	8	2 ICLK
0008 721Bh	ICU	Interrupt request enable register 1B	IER1B	8	8	2 ICLK
0008 721Ch	ICU	Interrupt request enable register 1C	IER1C	8	8	2 ICLK
0008 721Dh	ICU	Interrupt request enable register 1D	IER1D	8	8	2 ICLK
0008 721Eh	ICU	Interrupt request enable register 1E	IER1E	8	8	2 ICLK
0008 721Fh	ICU	Interrupt request enable register 1F	IER1F	8	8	2 ICLK
0008 72E0h	ICU	Software interrupt activation register	SWINTR	8	8	2 ICLK
0008 72F0h	ICU	Fast interrupt set register	FIR	16	16	2 ICLK
0008 7300h	ICU	Interrupt source priority register 00	IPR00	8	8	2 ICLK
0008 7301h	ICU	Interrupt source priority register 01	IPR01	8	8	2 ICLK
0008 7302h	ICU	Interrupt source priority register 02	IPR02	8	8	2 ICLK
0008 7303h	ICU	Interrupt source priority register 03	IPR03	8	8	2 ICLK
0008 7304h	ICU	Interrupt source priority register 04	IPR04	8	8	2 ICLK
0008 7305h	ICU	Interrupt source priority register 05	IPR05	8	8	2 ICLK
0008 7306h	ICU	Interrupt source priority register 06	IPR06	8	8	2 ICLK
0008 7307h	ICU	Interrupt source priority register 07	IPR07	8	8	2 ICLK
0008 7308h	ICU	Interrupt source priority register 08	IPR08	8	8	2 ICLK

Table 4.1 List of I/O Registers (Address Order) (12 / 36)

Address	Module Abbreviation	Register Name	Register Abbreviation	Number of Bits	Access Size	Number of Access Cycles
0008 730Ch	ICU	Interrupt source priority register 0C	IPR0C	8	8	2 ICLK
0008 730Dh	ICU	Interrupt source priority register 0D	IPR0D	8	8	2 ICLK
0008 730Eh	ICU	Interrupt source priority register 0E	IPR0E	8	8	2 ICLK
0008 7310h	ICU	Interrupt source priority register 10	IPR10	8	8	2 ICLK
0008 7311h	ICU	Interrupt source priority register 11	IPR11	8	8	2 ICLK
0008 7312h	ICU	Interrupt source priority register 12	IPR12	8	8	2 ICLK
0008 7314h	ICU	Interrupt source priority register 14	IPR14	8	8	2 ICLK
0008 7315h	ICU	Interrupt source priority register 15	IPR15	8	8	2 ICLK
0008 7318h	ICU	Interrupt source priority register 18	IPR18	8	8	2 ICLK
0008 731Eh	ICU	Interrupt source priority register 1E	IPR1E	8	8	2 ICLK
0008 731Fh	ICU	Interrupt source priority register 1F	IPR1F	8	8	2 ICLK
0008 7320h	ICU	Interrupt source priority register 20	IPR20	8	8	2 ICLK
0008 7321h	ICU	Interrupt source priority register 21	IPR21	8	8	2 ICLK
0008 7322h	ICU	Interrupt source priority register 22	IPR22	8	8	2 ICLK
0008 7323h	ICU	Interrupt source priority register 23	IPR23	8	8	2 ICLK
0008 7324h	ICU	Interrupt source priority register 24	IPR24	8	8	2 ICLK
0008 7325h	ICU	Interrupt source priority register 25	IPR25	8	8	2 ICLK
0008 7326h	ICU	Interrupt source priority register 26	IPR26	8	8	2 ICLK
0008 7327h	ICU	Interrupt source priority register 27	IPR27	8	8	2 ICLK
0008 7328h	ICU	Interrupt source priority register 28	IPR28	8	8	2 ICLK
0008 7329h	ICU	Interrupt source priority register 29	IPR29	8	8	2 ICLK
0008 732Ah	ICU	Interrupt source priority register 2A	IPR2A	8	8	2 ICLK
0008 732Bh	ICU	Interrupt source priority register 2B	IPR2B	8	8	2 ICLK
0008 732Ch	ICU	Interrupt source priority register 2C	IPR2C	8	8	2 ICLK
0008 732Dh	ICU	Interrupt source priority register 2D	IPR2D	8	8	2 ICLK
0008 732Eh	ICU	Interrupt source priority register 2E	IPR2E	8	8	2 ICLK
0008 732Fh	ICU	Interrupt source priority register 2F	IPR2F	8	8	2 ICLK
0008 733Ah	ICU	Interrupt source priority register 3A	IPR3A	8	8	2 ICLK
0008 733Bh	ICU	Interrupt source priority register 3B	IPR3B	8	8	2 ICLK
0008 733Ch	ICU	Interrupt source priority register 3C	IPR3C	8	8	2 ICLK
0008 7340h	ICU	Interrupt source priority register 40	IPR40	8	8	2 ICLK
0008 7344h	ICU	Interrupt source priority register 44	IPR44	8	8	2 ICLK
0008 7345h	ICU	Interrupt source priority register 45	IPR45	8	8	2 ICLK
0008 7348h	ICU	Interrupt source priority register 48	IPR48	8	8	2 ICLK
0008 7351h	ICU	Interrupt source priority register 51	IPR51	8	8	2 ICLK
0008 7352h	ICU	Interrupt source priority register 52	IPR52	8	8	2 ICLK
0008 7353h	ICU	Interrupt source priority register 53	IPR53	8	8	2 ICLK
0008 7354h	ICU	Interrupt source priority register 54	IPR54	8	8	2 ICLK
0008 7355h	ICU	Interrupt source priority register 55	IPR55	8	8	2 ICLK
0008 7356h	ICU	Interrupt source priority register 56	IPR56	8	8	2 ICLK
0008 7357h	ICU	Interrupt source priority register 57	IPR57	8	8	2 ICLK
0008 7358h	ICU	Interrupt source priority register 58	IPR58	8	8	2 ICLK
0008 7359h	ICU	Interrupt source priority register 59	IPR59	8	8	2 ICLK
0008 735Ah	ICU	Interrupt source priority register 5A	IPR5A	8	8	2 ICLK
0008 735Bh	ICU	Interrupt source priority register 5B	IPR5B	8	8	2 ICLK

Table 4.1 List of I/O Registers (Address Order) (13 / 36)

Address	Module Abbreviation	Register Name	Register Abbreviation	Number of Bits	Access Size	Number of Access Cycles
0008 735Ch	ICU	Interrupt source priority register 5C	IPR5C	8	8	2 ICLK
0008 735Dh	ICU	Interrupt source priority register 5D	IPR5D	8	8	2 ICLK
0008 735Eh	ICU	Interrupt source priority register 5E	IPR5E	8	8	2 ICLK
0008 735Fh	ICU	Interrupt source priority register 5F	IPR5F	8	8	2 ICLK
0008 7360h	ICU	Interrupt source priority register 60	IPR60	8	8	2 ICLK
0008 7361h	ICU	Interrupt source priority register 61	IPR61	8	8	2 ICLK
0008 7362h	ICU	Interrupt source priority register 62	IPR62	8	8	2 ICLK
0008 7363h	ICU	Interrupt source priority register 63	IPR63	8	8	2 ICLK
0008 7364h	ICU	Interrupt source priority register 64	IPR64	8	8	2 ICLK
0008 7365h	ICU	Interrupt source priority register 65	IPR65	8	8	2 ICLK
0008 7366h	ICU	Interrupt source priority register 66	IPR66	8	8	2 ICLK
0008 7367h	ICU	Interrupt source priority register 67	IPR67	8	8	2 ICLK
0008 7368h	ICU	Interrupt source priority register 68	IPR68	8	8	2 ICLK
0008 7369h	ICU	Interrupt source priority register 69	IPR69	8	8	2 ICLK
0008 736Ah	ICU	Interrupt source priority register 6A	IPR6A	8	8	2 ICLK
0008 736Bh	ICU	Interrupt source priority register 6B	IPR6B	8	8	2 ICLK
0008 7370h	ICU	Interrupt source priority register 70	IPR70	8	8	2 ICLK
0008 7371h	ICU	Interrupt source priority register 71	IPR71	8	8	2 ICLK
0008 7372h	ICU	Interrupt source priority register 72	IPR72	8	8	2 ICLK
0008 7373h	ICU	Interrupt source priority register 73	IPR73	8	8	2 ICLK
0008 7374h	ICU	Interrupt source priority register 74	IPR74	8	8	2 ICLK
0008 7375h	ICU	Interrupt source priority register 75	IPR75	8	8	2 ICLK
0008 7380h	ICU	Interrupt source priority register 80	IPR80	8	8	2 ICLK
0008 7381h	ICU	Interrupt source priority register 81	IPR81	8	8	2 ICLK
0008 7382h	ICU	Interrupt source priority register 82	IPR82	8	8	2 ICLK
0008 7383h	ICU	Interrupt source priority register 83	IPR83	8	8	2 ICLK
0008 7385h	ICU	Interrupt source priority register 85	IPR85	8	8	2 ICLK
0008 7386h	ICU	Interrupt source priority register 86	IPR86	8	8	2 ICLK
0008 7388h	ICU	Interrupt source priority register 88	IPR88	8	8	2 ICLK
0008 7389h	ICU	Interrupt source priority register 89	IPR89	8	8	2 ICLK
0008 738Ah	ICU	Interrupt source priority register 8A	IPR8A	8	8	2 ICLK
0008 738Bh	ICU	Interrupt source priority register 8B	IPR8B	8	8	2 ICLK
0008 738Ch	ICU	Interrupt source priority register 8C	IPR8C	8	8	2 ICLK
0008 738Dh	ICU	Interrupt source priority register 8D	IPR8D	8	8	2 ICLK
0008 738Eh	ICU	Interrupt source priority register 8E	IPR8E	8	8	2 ICLK
0008 738Fh	ICU	Interrupt source priority register 8F	IPR8F	8	8	2 ICLK
0008 7400h	ICU	DMACA activation source select register 0	DMRSR0	8	8	2 ICLK
0008 7404h	ICU	DMACA activation source select register 1	DMRSR1	8	8	2 ICLK
0008 7408h	ICU	DMACA activation source select register 2	DMRSR2	8	8	2 ICLK
0008 740Ch	ICU	DMACA activation source select register 3	DMRSR3	8	8	2 ICLK
0008 7500h	ICU	IRQ control register 0	IRQCR0	8	8	2 ICLK
0008 7501h	ICU	IRQ control register 1	IRQCR1	8	8	2 ICLK
0008 7502h	ICU	IRQ control register 2	IRQCR2	8	8	2 ICLK
0008 7503h	ICU	IRQ control register 3	IRQCR3	8	8	2 ICLK
0008 7504h	ICU	IRQ control register 4	IRQCR4	8	8	2 ICLK

Table 4.1 List of I/O Registers (Address Order) (14 / 36)

Address	Module Abbreviation	Register Name	Register Abbreviation	Number of Bits	Access Size	Number of Access Cycles
0008 7505h	ICU	IRQ control register 5	IRQCR5	8	8	2 ICLK
0008 7506h	ICU	IRQ control register 6	IRQCR6	8	8	2 ICLK
0008 7507h	ICU	IRQ control register 7	IRQCR7	8	8	2 ICLK
0008 7508h	ICU	IRQ control register 8	IRQCR8	8	8	2 ICLK
0008 7509h	ICU	IRQ control register 9	IRQCR9	8	8	2 ICLK
0008 750Ah	ICU	IRQ control register 10	IRQCR10	8	8	2 ICLK
0008 750Bh	ICU	IRQ control register 11	IRQCR11	8	8	2 ICLK
0008 750Ch	ICU	IRQ control register 12	IRQCR12	8	8	2 ICLK
0008 750Dh	ICU	IRQ control register 13	IRQCR13	8	8	2 ICLK
0008 750Eh	ICU	IRQ control register 14	IRQCR14	8	8	2 ICLK
0008 750Fh	ICU	IRQ control register 15	IRQCR15	8	8	2 ICLK
0008 7580h	ICU	Non-maskable interrupt status register	NMISR	8	8	2 ICLK
0008 7581h	ICU	Non-maskable interrupt enable register	NMIER	8	8	2 ICLK
0008 7582h	ICU	Non-maskable interrupt clear register	NMICLR	8	8	2 ICLK
0008 7583h	ICU	NMI pin interrupt control register	NMICR	8	8	2 ICLK
0008 8000h	CMT	Compare match timer start register 0	CMSTR0	16	16	2 to 3 PCLK*8
0008 8002h	CMT0	Compare match timer control register	CMCR	16	16	2 to 3 PCLK*8
0008 8004h	CMT0	Compare match timer counter	CMCNT	16	16	2 to 3 PCLK*8
0008 8006h	CMT0	Compare match timer constant register	CMCOR	16	16	2 to 3 PCLK*8
0008 8008h	CMT1	Compare match timer control register	CMCR	16	16	2 to 3 PCLK*8
0008 800Ah	CMT1	Compare match timer counter	CMCNT	16	16	2 to 3 PCLK*8
0008 800Ch	CMT1	Compare match timer constant register	CMCOR	16	16	2 to 3 PCLK*8
0008 8010h	CMT	Compare match timer start register 1	CMSTR1	16	16	2 to 3 PCLK*8
0008 8012h	CMT2	Compare match timer control register	CMCR	16	16	2 to 3 PCLK*8
0008 8014h	CMT2	Compare match timer counter	CMCNT	16	16	2 to 3 PCLK*8
0008 8016h	CMT2	Compare match timer constant register	CMCOR	16	16	2 to 3 PCLK*8
0008 8018h	CMT3	Compare match timer control register	CMCR	16	16	2 to 3 PCLK*8
0008 801Ah	CMT3	Compare match timer counter	CMCNT	16	16	2 to 3 PCLK*8
0008 801Ch	CMT3	Compare match timer constant register	CMCOR	16	16	2 to 3 PCLK*8
0008 8028h	WDT	Timer control/status register	READ.TCSR	8	8	2 to 3 PCLK*8
0008 8028h	WDT	Write window A register	WRITE.WINA	16	16	2 to 3 PCLK*8
0008 8029h	WDT	Timer counter	READ.TCNT	8	8	2 to 3 PCLK*8
0008 802Ah	WDT	Write window B register	WRITE.WINB	16	16	2 to 3 PCLK*8
0008 802Bh	WDT	Reset control/status register	READ.RSTCSR	8	8	2 to 3 PCLK*8
0008 8030h	IWDT	IWDT refresh register	IWDTRR	8	8	2 to 3 PCLK*8
0008 8032h	IWDT	IWDT control register	IWDTCR	16	16	2 to 3 PCLK*8
0008 8034h	IWDT	IWDT status register	IWDTSR	16	16	2 to 3 PCLK*8
0008 8040h	AD0	A/D data register A	ADDRA	16	16	2 to 3 PCLK*8
0008 8042h	AD0	A/D data register B	ADDRB	16	16	2 to 3 PCLK*8
0008 8044h	AD0	A/D data register C	ADDRC	16	16	2 to 3 PCLK*8
0008 8046h	AD0	A/D data register D	ADDRD	16	16	2 to 3 PCLK*8
0008 8050h	AD0	A/D control/status register	ADCSR	8	8	2 to 3 PCLK*8
0008 8051h	AD0	A/D control register	ADCR	8	8	2 to 3 PCLK*8
0008 8052h	AD0	ADDRn format select register	ADDPR	8	8	2 to 3 PCLK*8

Table 4.1 List of I/O Registers (Address Order) (15 / 36)

Address	Module Abbreviation	Register Name	Register Abbreviation	Number of Bits	Access Size	Number of Access Cycles
0008 8053h	AD0	A/D sampling state register	ADSSTR	8	8	2 to 3 PCLK*8
0008 805Fh	AD0	A/D self-diagnostic register	ADDIAGR	8	8	2 to 3 PCLK*8
0008 8060h	AD1	A/D data register A	ADDRA	16	16	2 to 3 PCLK*8
0008 8062h	AD1	A/D data register B	ADDRB	16	16	2 to 3 PCLK*8
0008 8064h	AD1	A/D data register C	ADDRC	16	16	2 to 3 PCLK*8
0008 8066h	AD1	A/D data register D	ADDRD	16	16	2 to 3 PCLK*8
0008 8070h	AD1	A/D control/status register	ADCSR	8	8	2 to 3 PCLK*8
0008 8071h	AD1	A/D control register	ADCR	8	8	2 to 3 PCLK*8
0008 8072h	AD1	ADDRn format select register	ADDPR	8	8	2 to 3 PCLK*8
0008 8073h	AD1	A/D sampling state register	ADSSTR	8	8	2 to 3 PCLK*8
0008 807Fh	AD1	A/D self-diagnostic register	ADDIAGR	8	8	2 to 3 PCLK*8
0008 80C0h	DA	D/A data register 0	DADR0	16	16	2 to 3 PCLK*8
0008 80C2h	DA	D/A data register 1	DADR1	16	16	2 to 3 PCLK*8
0008 80C4h	DA	D/A control register	DACR	8	8	2 to 3 PCLK*8
0008 80C5h	DA	DADRm format select register	DADPR	8	8	2 to 3 PCLK*8
0008 81E6h	PPG0	PPG output control register	PCR	8	8	2 to 3 PCLK*8
0008 81E7h	PPG0	PPG output mode register	PMR	8	8	2 to 3 PCLK*8
0008 81E8h	PPG0	Next data enable register H	NDERH	8	8	2 to 3 PCLK*8
0008 81E9h	PPG0	Next data enable register L	NDERL	8	8	2 to 3 PCLK*8
0008 81EAh	PPG0	Output data register H	PODRH	8	8	2 to 3 PCLK*8
0008 81EBh	PPG0	Output data register L	PODRL	8	8	2 to 3 PCLK*8
0008 81ECh*1	PPG0	Next data register H	NDRH	8	8	2 to 3 PCLK*8
0008 81EDh*2	PPG0	Next data register L	NDRL	8	8	2 to 3 PCLK*8
0008 81EEh*1	PPG0	Next data register H2	NDRH2	8	8	2 to 3 PCLK*8
0008 81EFh*2	PPG0	Next data register L2	NDRL2	8	8	2 to 3 PCLK*8
0008 81F0h	PPG1	PPG trigger select register	PTRSLR	8	8	2 to 3 PCLK*8
0008 81F6h	PPG1	PPG output control register	PCR	8	8	2 to 3 PCLK*8
0008 81F7h	PPG1	PPG output mode register	PMR	8	8	2 to 3 PCLK*8
0008 81F8h	PPG1	Next data enable register H	NDERH	8	8	2 to 3 PCLK*8
0008 81F9h	PPG1	Next data enable register L	NDERL	8	8	2 to 3 PCLK*8
0008 81FAh	PPG1	Output data register H	PODRH	8	8	2 to 3 PCLK*8
0008 81FBh	PPG1	Output data register L	PODRL	8	8	2 to 3 PCLK*8
0008 81FCh*3	PPG1	Next data register H	NDRH	8	8	2 to 3 PCLK*8
0008 81FDh*4	PPG1	Next data register L	NDRL	8	8	2 to 3 PCLK*8
0008 81FEh*3	PPG1	Next data register H2	NDRH2	8	8	2 to 3 PCLK*8
0008 81FFh*4	PPG1	Next data register L2	NDRL2	8	8	2 to 3 PCLK*8
0008 8200h	TMR0	Timer control register	TCR	8	8	2 to 3 PCLK*8
0008 8201h	TMR1	Timer control register	TCR	8	8	2 to 3 PCLK*8
0008 8202h	TMR0	Timer control/status register	TCSR	8	8	2 to 3 PCLK*8
0008 8203h	TMR1	Timer control/status register	TCSR	8	8	2 to 3 PCLK*8
0008 8204h	TMR0	Time constant register A	TCORA	8	8	2 to 3 PCLK*8
0008 8205h	TMR1	Time constant register A	TCORA	8	8	2 to 3 PCLK*8
0008 8206h	TMR0	Time constant register B	TCORB	8	8	2 to 3 PCLK*8
0008 8207h	TMR1	Time constant register B	TCORB	8	8	2 to 3 PCLK*8
0008 8208h	TMR0	Timer counter	TCNT	8	8	2 to 3 PCLK*8

Table 4.1 List of I/O Registers (Address Order) (16 / 36)

Address	Module Abbreviation	Register Name	Register Abbreviation	Number of Bits	Access Size	Number of Access Cycles
0008 8209h	TMR1	Timer counter	TCNT	8	8	2 to 3 PCLK*8
0008 820Ah	TMR0	Timer counter control register	TCCR	8	8	2 to 3 PCLK*8
0008 820Bh	TMR1	Timer counter control register	TCCR	8	8	2 to 3 PCLK*8
0008 8204h	TMR01	Time constant register A	TCORA	16	16	2 to 3 PCLK*8
0008 8206h	TMR01	Time constant register B	TCORB	16	16	2 to 3 PCLK*8
0008 8208h	TMR01	Timer counter	TCNT	16	16	2 to 3 PCLK*8
0008 820Ah	TMR01	Timer counter control register	TCCR	16	16	2 to 3 PCLK*8
0008 8210h	TMR2	Timer control register	TCR	8	8	2 to 3 PCLK*8
0008 8211h	TMR3	Timer control register	TCR	8	8	2 to 3 PCLK*8
0008 8212h	TMR2	Timer control/status register	TCSR	8	8	2 to 3 PCLK*8
0008 8213h	TMR3	Timer control/status register	TCSR	8	8	2 to 3 PCLK*8
0008 8214h	TMR2	Time constant register A	TCORA	8	8	2 to 3 PCLK*8
0008 8215h	TMR3	Time constant register A	TCORA	8	8	2 to 3 PCLK*8
0008 8216h	TMR2	Time constant register B	TCORB	8	8	2 to 3 PCLK*8
0008 8217h	TMR3	Time constant register B	TCORB	8	8	2 to 3 PCLK*8
0008 8218h	TMR2	Timer counter	TCNT	8	8	2 to 3 PCLK*8
0008 8219h	TMR3	Timer counter	TCNT	8	8	2 to 3 PCLK*8
0008 821Ah	TMR2	Timer counter control register	TCCR	8	8	2 to 3 PCLK*8
0008 821Bh	TMR3	Timer counter control register	TCCR	8	8	2 to 3 PCLK*8
0008 8214h	TMR23	Time constant register A	TCORA	16	16	2 to 3 PCLK*8
0008 8216h	TMR23	Time constant register B	TCORB	16	16	2 to 3 PCLK*8
0008 8218h	TMR23	Timer counter	TCNT	16	16	2 to 3 PCLK*8
0008 821Ah	TMR23	Timer counter control register	TCCR	16	16	2 to 3 PCLK*8
0008 8240h	SCI0	Serial mode register	SMR	8	8	2 to 3 PCLK*8
0008 8241h	SCI0	Bit rate register	BRR	8	8	2 to 3 PCLK*8
0008 8242h	SCI0	Serial control register	SCR	8	8	2 to 3 PCLK*8
0008 8243h	SCI0	Transmit data register	TDR	8	8	2 to 3 PCLK*8
0008 8244h	SCI0	Serial status register	SSR	8	8	2 to 3 PCLK*8
0008 8245h	SCI0	Receive data register	RDR	8	8	2 to 3 PCLK*8
0008 8246h	SCI0	Smart card mode register	SCMR	8	8	2 to 3 PCLK*8
0008 8247h	SCI0	Serial extended mode register	SEMR	8	8	2 to 3 PCLK*8
0008 8240h	SMCI0	Serial mode register	SMR	8	8	2 to 3 PCLK*8
0008 8241h	SMCI0	Bit rate register	BRR	8	8	2 to 3 PCLK*8
0008 8242h	SMCI0	Serial control register	SCR	8	8	2 to 3 PCLK*8
0008 8243h	SMCI0	Transmit data register	TDR	8	8	2 to 3 PCLK*8
0008 8244h	SMCI0	Serial status register	SSR	8	8	2 to 3 PCLK*8
0008 8245h	SMCI0	Receive data register	RDR	8	8	2 to 3 PCLK*8
0008 8246h	SMCI0	Smart card mode register	SCMR	8	8	2 to 3 PCLK*8
0008 8248h	SCI1	Serial mode register	SMR	8	8	2 to 3 PCLK*8
0008 8249h	SCI1	Bit rate register	BRR	8	8	2 to 3 PCLK*8
0008 824Ah	SCI1	Serial control register	SCR	8	8	2 to 3 PCLK*8
0008 824Bh	SCI1	Transmit data register	TDR	8	8	2 to 3 PCLK*8
0008 824Ch	SCI1	Serial status register	SSR	8	8	2 to 3 PCLK*8
0008 824Dh	SCI1	Receive data register	RDR	8	8	2 to 3 PCLK*8
0008 824Eh	SCI1	Smart card mode register	SCMR	8	8	2 to 3 PCLK*8

Table 4.1 List of I/O Registers (Address Order) (17 / 36)

Address	Module Abbreviation	Register Name	Register Abbreviation	Number of Bits	Access Size	Number of Access Cycles
0008 824Fh	SCI1	Serial extended mode register	SEMR	8	8	2 to 3 PCLK*8
0008 8248h	SMCI1	Serial mode register	SMR	8	8	2 to 3 PCLK*8
0008 8249h	SMCI1	Bit rate register	BRR	8	8	2 to 3 PCLK*8
0008 824Ah	SMCI1	Serial control register	SCR	8	8	2 to 3 PCLK*8
0008 824Bh	SMCI1	Transmit data register	TDR	8	8	2 to 3 PCLK*8
0008 824Ch	SMCI1	Serial status register	SSR	8	8	2 to 3 PCLK*8
0008 824Dh	SMCI1	Receive data register	RDR	8	8	2 to 3 PCLK*8
0008 824Eh	SMCI1	Smart card mode register	SCMR	8	8	2 to 3 PCLK*8
0008 8250h	SCI2	Serial mode register	SMR	8	8	2 to 3 PCLK*8
0008 8251h	SCI2	Bit rate register	BRR	8	8	2 to 3 PCLK*8
0008 8252h	SCI2	Serial control register	SCR	8	8	2 to 3 PCLK*8
0008 8253h	SCI2	Transmit data register	TDR	8	8	2 to 3 PCLK*8
0008 8254h	SCI2	Serial status register	SSR	8	8	2 to 3 PCLK*8
0008 8255h	SCI2	Receive data register	RDR	8	8	2 to 3 PCLK*8
0008 8256h	SCI2	Smart card mode register	SCMR	8	8	2 to 3 PCLK*8
0008 8257h	SCI2	Serial extended mode register	SEMR	8	8	2 to 3 PCLK*8
0008 8250h	SMCI2	Serial mode register	SMR	8	8	2 to 3 PCLK*8
0008 8251h	SMCI2	Bit rate register	BRR	8	8	2 to 3 PCLK*8
0008 8252h	SMCI2	Serial control register	SCR	8	8	2 to 3 PCLK*8
0008 8253h	SMCI2	Transmit data register	TDR	8	8	2 to 3 PCLK*8
0008 8254h	SMCI2	Serial status register	SSR	8	8	2 to 3 PCLK*8
0008 8255h	SMCI2	Receive data register	RDR	8	8	2 to 3 PCLK*8
0008 8256h	SMCI2	Smart card mode register	SCMR	8	8	2 to 3 PCLK*8
0008 8258h	SCI3	Serial mode register	SMR	8	8	2 to 3 PCLK*8
0008 8259h	SCI3	Bit rate register	BRR	8	8	2 to 3 PCLK*8
0008 825Ah	SCI3	Serial control register	SCR	8	8	2 to 3 PCLK*8
0008 825Bh	SCI3	Transmit data register	TDR	8	8	2 to 3 PCLK*8
0008 825Ch	SCI3	Serial status register	SSR	8	8	2 to 3 PCLK*8
0008 825Dh	SCI3	Receive data register	RDR	8	8	2 to 3 PCLK*8
0008 825Eh	SCI3	Smart card mode register	SCMR	8	8	2 to 3 PCLK*8
0008 825Fh	SCI3	Serial extended mode register	SEMR	8	8	2 to 3 PCLK*8
0008 8258h	SMCI3	Serial mode register	SMR	8	8	2 to 3 PCLK*8
0008 8259h	SMCI3	Bit rate register	BRR	8	8	2 to 3 PCLK*8
0008 825Ah	SMCI3	Serial control register	SCR	8	8	2 to 3 PCLK*8
0008 825Bh	SMCI3	Transmit data register	TDR	8	8	2 to 3 PCLK*8
0008 825Ch	SMCI3	Serial status register	SSR	8	8	2 to 3 PCLK*8
0008 825Dh	SMCI3	SMCI3 Receive data register	RDR	8	8	2 to 3 PCLK*8
0008 825Eh	SMCI3	SMCI3 Smart card mode register	SCMR	8	8	2 to 3 PCLK*8
0008 8268h	SCI5	Serial mode register	SMR	8	8	2 to 3 PCLK*8
0008 8269h	SCI5	Bit rate register	BRR	8	8	2 to 3 PCLK*8
0008 826Ah	SCI5	Serial control register	SCR	8	8	2 to 3 PCLK*8
0008 826Bh	SCI5	Transmit data register	TDR	8	8	2 to 3 PCLK*8
0008 826Ch	SCI5	Serial status register	SSR	8	8	2 to 3 PCLK*8
0008 826Dh	SCI5	Receive data register	RDR	8	8	2 to 3 PCLK*8
0008 826Eh	SCI5	Smart card mode register	SCMR	8	8	2 to 3 PCLK*8

Table 4.1 List of I/O Registers (Address Order) (18 / 36)

Address	Module Abbreviation	Register Name	Register Abbreviation	Number of Bits	Access Size	Number of Access Cycles
0008 826Fh	SCI5	Serial extended mode register	SEMR	8	8	2 to 3 PCLK*8
0008 8268h	SMCI5	Serial mode register	SMR	8	8	2 to 3 PCLK*8
0008 8269h	SMCI5	Bit rate register	BRR	8	8	2 to 3 PCLK*8
0008 826Ah	SMCI5	Serial control register	SCR	8	8	2 to 3 PCLK*8
0008 826Bh	SMCI5	Transmit data register	TDR	8	8	2 to 3 PCLK*8
0008 826Ch	SMCI5	Serial status register	SSR	8	8	2 to 3 PCLK*8
0008 826Dh	SMCI5	Receive data register	RDR	8	8	2 to 3 PCLK*8
0008 826Eh	SMCI5	Smart card mode register	SCMR	8	8	2 to 3 PCLK*8
0008 8270h	SCI6	Serial mode register	SMR	8	8	2 to 3 PCLK*8
0008 8271h	SCI6	Bit rate register	BRR	8	8	2 to 3 PCLK*8
0008 8272h	SCI6	Serial control register	SCR	8	8	2 to 3 PCLK*8
0008 8273h	SCI6	Transmit data register	TDR	8	8	2 to 3 PCLK*8
0008 8274h	SCI6	Serial status register	SSR	8	8	2 to 3 PCLK*8
0008 8275h	SCI6	Receive data register	RDR	8	8	2 to 3 PCLK*8
0008 8276h	SCI6	Smart card mode register	SCMR	8	8	2 to 3 PCLK*8
0008 8277h	SCI6	Serial extended mode register	SEMR	8	8	2 to 3 PCLK*8
0008 8270h	SMCI6	Serial mode register	SMR	8	8	2 to 3 PCLK*8
0008 8271h	SMCI6	Bit rate register	BRR	8	8	2 to 3 PCLK*8
0008 8272h	SMCI6	Serial control register	SCR	8	8	2 to 3 PCLK*8
0008 8273h	SMCI6	Transmit data register	TDR	8	8	2 to 3 PCLK*8
0008 8274h	SMCI6	Serial status register	SSR	8	8	2 to 3 PCLK*8
0008 8275h	SMCI6	Receive data register	RDR	8	8	2 to 3 PCLK*8
0008 8276h	SMCI6	Smart card mode register	SCMR	8	8	2 to 3 PCLK*8
0008 8280h	CRC	CRC control register	CRCCR	8	8	2 to 3 PCLK*8
0008 8281h	CRC	CRC data input register	CRCDIR	8	8	2 to 3 PCLK*8
0008 8282h	CRC	CRC data output register	CRCDOR	16	16	2 to 3 PCLK*8
0008 8300h	RIIC0	I^2C bus control register 1	ICCR1	8	8	2 to 3 PCLK*8
0008 8301h	RIIC0	I^2C bus control register 2	ICCR2	8	8	2 to 3 PCLK*8
0008 8302h	RIIC0	I^2C bus mode register 1	ICMR1	8	8	2 to 3 PCLK*8
0008 8303h	RIIC0	I^2C bus mode register 2	ICMR2	8	8	2 to 3 PCLK*8
0008 8304h	RIIC0	I^2C bus mode register 3	ICMR3	8	8	2 to 3 PCLK*8
0008 8305h	RIIC0	I^2C bus function enable register	ICFER	8	8	2 to 3 PCLK*8
0008 8306h	RIIC0	I^2C bus status enable register	ICSER	8	8	2 to 3 PCLK*8
0008 8307h	RIIC0	I^2C bus interrupt enable register	ICIER	8	8	2 to 3 PCLK*8
0008 8308h	RIIC0	I^2C bus status register 1	ICSR1	8	8	2 to 3 PCLK*8
0008 8309h	RIIC0	I^2C bus status register 2	ICSR2	8	8	2 to 3 PCLK*8
0008 830Ah	RIIC0	Slave address register L0	SARL0	8	8	2 to 3 PCLK*8
0008 830Ah	RIIC0	Timeout internal counter	TMOCNT	16	16	2 to 3 PCLK*8
0008 830Ah	RIIC0	Timeout internal counter L	TMOCNTL	8	8	2 to 3 PCLK*8
0008 830Bh	RIIC0	Slave address register U0	SARU0	8	8	2 to 3 PCLK*8
0008 830Bh	RIIC0	Timeout internal counter U	TMOCNTU	8	8	2 to 3 PCLK*8
0008 830Ch	RIIC0	Slave address register L1	SARL1	8	8	2 to 3 PCLK*8
0008 830Dh	RIIC0	Slave address register U1	SARU1	8	8	2 to 3 PCLK*8
0008 830Eh	RIIC0	Slave address register L2	SARL2	8	8	2 to 3 PCLK*8
0008 830Fh	RIIC0	Slave address register U2	SARU2	8	8	2 to 3 PCLK*8

Table 4.1 List of I/O Registers (Address Order) (19 / 36)

Address	Module Abbreviation	Register Name	Register Abbreviation	Number of Bits	Access Size	Number of Access Cycles
0008 8310h	RIIC0	I2C bus bit rate low-level register	ICBRL	8	8	2 to 3 PCLK*8
0008 8311h	RIIC0	I2C bus bit rate high-level register	ICBRH	8	8	2 to 3 PCLK*8
0008 8312h	RIIC0	I2C bus transmit data register	ICDRT	8	8	2 to 3 PCLK*8
0008 8313h	RIIC0	I2C bus receive data register	ICDRR	8	8	2 to 3 PCLK*8
0008 8320h	RIIC1	I2C bus control register 1	ICCR1	8	8	2 to 3 PCLK*8
0008 8321h	RIIC1	I2C bus control register 2	ICCR2	8	8	2 to 3 PCLK*8
0008 8322h	RIIC1	I2C bus mode register 1	ICMR1	8	8	2 to 3 PCLK*8
0008 8323h	RIIC1	I2C bus mode register 2	ICMR2	8	8	2 to 3 PCLK*8
0008 8324h	RIIC1	I2C bus mode register 3	ICMR3	8	8	2 to 3 PCLK*8
0008 8325h	RIIC1	I2C bus function enable register	ICFER	8	8	2 to 3 PCLK*8
0008 8326h	RIIC1	I2C bus status enable register	ICSER	8	8	2 to 3 PCLK*8
0008 8327h	RIIC1	I2C bus interrupt enable register	ICIER	8	8	2 to 3 PCLK*8
0008 8328h	RIIC1	I2C bus status register 1	ICSR1	8	8	2 to 3 PCLK*8
0008 8329h	RIIC1	I2C bus status register 2	ICSR2	8	8	2 to 3 PCLK*8
0008 832Ah	RIIC1	Slave address register L0	SARL0	8	8	2 to 3 PCLK*8
0008 832Ah	RIIC1	Timeout internal counter	TMOCNT	16	16	2 to 3 PCLK*8
0008 832Ah	RIIC1	Timeout internal counter L	TMOCNTL	8	8	2 to 3 PCLK*8
0008 832Bh	RIIC1	Slave address register U0	SARU0	8	8	2 to 3 PCLK*8
0008 832Bh	RIIC1	Timeout internal counter U	TMOCNTU		8	2 to 3 PCLK*8
0008 832Ch	RIIC1	Slave address register L1	SARL1	8	8	2 to 3 PCLK*8
0008 832Dh	RIIC1	Slave address register U1	SARU1	8	8	2 to 3 PCLK*8
0008 832Eh	RIIC1	Slave address register L2	SARL2	8	8	2 to 3 PCLK*8
0008 832Fh	RIIC1	Slave address register U2	SARU2	8	8	2 to 3 PCLK*8
0008 8330h	RIIC1	I2C bus bit rate low-level register	ICBRL	8	8	2 to 3 PCLK*8
0008 8331h	RIIC1	I2C bus bit rate high-level register	ICBRH	8	8	2 to 3 PCLK*8
0008 8332h	RIIC1	I2C bus transmit data register	ICDRT	8	8	2 to 3 PCLK*8
0008 8333h	RIIC1	I2C bus receive data register	ICDRR	8	8	2 to 3 PCLK*8
0008 8380h	RSPI0	RSPI control register	SPCR	8	8	2 to 3 PCLK*8
0008 8381h	RSPI0	RSPI slave select polarity register	SSLP	8	8	2 to 3 PCLK*8
0008 8382h	RSPI0	RSPI pin control register	SPPCR	8	8	2 to 3 PCLK*8
0008 8383h	RSPI0	RSPI status register	SPSR	8	8	2 to 3 PCLK*8
0008 8384h	RSPI0	RSPI data register	SPDR	32	16, 32	2 to 3 PCLK*8
0008 8388h	RSPI0	RSPI sequence control register	SPSCR	8	8	2 to 3 PCLK*8
0008 8389h	RSPI0	RSPI sequence status register	SPSSR	8	8	2 to 3 PCLK*8
0008 838Ah	RSPI0	RSPI bit rate register	SPBR	8	8	2 to 3 PCLK*8
0008 838Bh	RSPI0	RSPI data control register	SPDCR	8	8	2 to 3 PCLK*8
0008 838Ch	RSPI0	RSPI clock delay register	SPCKD	8	8	2 to 3 PCLK*8
0008 838Dh	RSPI0	RSPI slave select negation delay register	SSLND	8	8	2 to 3 PCLK*8
0008 838Eh	RSPI0	RSPI next-access delay register	SPND	8	8	2 to 3 PCLK*8
0008 838Fh	RSPI0	RSPI control register 2	SPCR2	8	8	2 to 3 PCLK*8
0008 8390h	RSPI0	RSPI command register 0	SPCMD0	16	16	2 to 3 PCLK*8
0008 8392h	RSPI0	RSPI command register 1	SPCMD1	16	16	2 to 3 PCLK*8
0008 8394h	RSPI0	RSPI command register 2	SPCMD2	16	16	2 to 3 PCLK*8
0008 8396h	RSPI0	RSPI command register 3	SPCMD3	16	16	2 to 3 PCLK*8
0008 8398h	RSPI0	RSPI command register 4	SPCMD4	16	16	2 to 3 PCLK*8

Table 4.1 List of I/O Registers (Address Order) (20 / 36)

Address	Module Abbreviation	Register Name	Register Abbreviation	Number of Bits	Access Size	Number of Access Cycles
0008 839Ah	RSPI0	RSPI command register 5	SPCMD5	16	16	2 to 3 PCLK*8
0008 839Ch	RSPI0	RSPI command register 6	SPCMD6	16	16	2 to 3 PCLK*8
0008 839Eh	RSPI0	RSPI command register 7	SPCMD7	16	16	2 to 3 PCLK*8
0008 83A0h	RSPI1	RSPI control register	SPCR	8	8	2 to 3 PCLK*8
0008 83A1h	RSPI1	RSPI slave select polarity register	SSLP	8	8	2 to 3 PCLK*8
0008 83A2h	RSPI1	RSPI pin control register	SPPCR	8	8	2 to 3 PCLK*8
0008 83A3h	RSPI1	RSPI status register	SPSR	8	8	2 to 3 PCLK*8
0008 83A4h	RSPI1	RSPI data register	SPDR	32	16, 32	2 to 3 PCLK*8
0008 83A8h	RSPI1	RSPI sequence control register	SPSCR	8	8	2 to 3 PCLK*8
0008 83A9h	RSPI1	RSPI sequence status register	SPSSR	8	8	2 to 3 PCLK*8
0008 83AAh	RSPI1	RSPI bit rate register	SPBR	8	8	2 to 3 PCLK*8
0008 83ABh	RSPI1	RSPI data control register	SPDCR	8	8	2 to 3 PCLK*8
0008 83ACh	RSPI1	RSPI clock delay register	SPCKD	8	8	2 to 3 PCLK*8
0008 83ADh	RSPI1	RSPI slave select negation delay register	SSLND	8	8	2 to 3 PCLK*8
0008 83AEh	RSPI1	RSPI next-access delay register	SPND	8	8	2 to 3 PCLK*8
0008 83AFh	RSPI1	RSPI control register 2	SPCR2	8	8	2 to 3 PCLK*8
0008 83B0h	RSPI1	RSPI command register 0	SPCMD0	16	16	2 to 3 PCLK*8
0008 83B2h	RSPI1	RSPI command register 1	SPCMD1	16	16	2 to 3 PCLK*8
0008 83B4h	RSPI1	RSPI command register 2	SPCMD2	16	16	2 to 3 PCLK*8
0008 83B6h	RSPI1	RSPI command register 3	SPCMD3	16	16	2 to 3 PCLK*8
0008 83B8h	RSPI1	RSPI command register 4	SPCMD4	16	16	2 to 3 PCLK*8
0008 83BAh	RSPI1	RSPI command register 5	SPCMD5	16	16	2 to 3 PCLK*8
0008 83BCh	RSPI1	RSPI command register 6	SPCMD6	16	16	2 to 3 PCLK*8
0008 83BEh	RSPI1	RSPI command register 7	SPCMD7	16	16	2 to 3 PCLK*8
0008 8600h	MTU3	Timer control register	TCR	8	8	2 to 3 PCLK*8
0008 8601h	MTU4	Timer control register	TCR	8	8	2 to 3 PCLK*8
0008 8602h	MTU3	Timer mode register	TMDR	8	8	2 to 3 PCLK*8
0008 8603h	MTU4	Timer mode register	TMDR	8	8	2 to 3 PCLK*8
0008 8604h	MTU3	Timer I/O control register H	TIORH	8	8	2 to 3 PCLK*8
0008 8605h	MTU3	Timer I/O control register L	TIORL	8	8	2 to 3 PCLK*8
0008 8606h	MTU4	Timer I/O control register H	TIORH	8	8	2 to 3 PCLK*8
0008 8607h	MTU4	Timer I/O control register L	TIORL	8	8	2 to 3 PCLK*8
0008 8608h	MTU3	Timer interrupt enable register	TIER	8	8	2 to 3 PCLK*8
0008 8609h	MTU4	Timer interrupt enable register	TIER	8	8	2 to 3 PCLK*8
0008 860Ah	MTUA	Timer output master enable register	TOER	8	8	2 to 3 PCLK*8
0008 860Dh	MTUA	Timer gate control register	TGCR	8	8	2 to 3 PCLK*8
0008 860Eh	MTUA	Timer output control register 1	TOCR1	8	8	2 to 3 PCLK*8
0008 860Fh	MTUA	Timer output control register 2	TOCR2	8	8	2 to 3 PCLK*8
0008 8610h	MTU3	Timer counter	TCNT	16	16	2 to 3 PCLK*8
0008 8612h	MTU4	Timer counter	TCNT	16	16	2 to 3 PCLK*8
0008 8614h	MTUA	Timer cycle data register	TCDR	16	16	2 to 3 PCLK*8
0008 8616h	MTUA	Timer dead time data register	TDDR	16	16	2 to 3 PCLK*8
0008 8618h	MTU3	Timer general register A	TGRA	16	16	2 to 3 PCLK*8
0008 861Ah	MTU3	Timer general register B	TGRB	16	16	2 to 3 PCLK*8
0008 861Ch	MTU4	Timer general register A	TGRA	16	16	2 to 3 PCLK*8

Table 4.1 List of I/O Registers (Address Order) (21 / 36)

Address	Module Abbreviation	Register Name	Register Abbreviation	Number of Bits	Access Size	Number of Access Cycles
0008 861Eh	MTU4	Timer general register B	TGRB	16	16	2 to 3 PCLK*8
0008 8620h	MTUA	Timer subcounter	TCNTS	16	16	2 to 3 PCLK*8
0008 8622h	MTUA	Timer cycle buffer register	TCBR	16	16	2 to 3 PCLK*8
0008 8624h	MTU3	Timer general register C	TGRC	16	16	2 to 3 PCLK*8
0008 8626h	MTU3	Timer general register D	TGRD	16	16	2 to 3 PCLK*8
0008 8628h	MTU4	Timer general register C	TGRC	16	16	2 to 3 PCLK*8
0008 862Ah	MTU4	Timer general register D	TGRD	16	16	2 to 3 PCLK*8
0008 862Ch	MTU3	Timer status register	TSR	8	8	2 to 3 PCLK*8
0008 862Dh	MTU4	Timer status register	TSR	8	8	2 to 3 PCLK*8
0008 8630h	MTUA	Timer interrupt skipping set register	TITCR	8	8	2 to 3 PCLK*8
0008 8631h	MTUA	Timer interrupt skipping counter	TITCNT	8	8	2 to 3 PCLK*8
0008 8632h	MTUA	Timer buffer transfer set register	TBTER	8	8	2 to 3 PCLK*8
0008 8634h	MTUA	Timer dead time enable register	TDER	8	8	2 to 3 PCLK*8
0008 8636h	MTUA	Timer output level buffer register	TOLBR	8	8	2 to 3 PCLK*8
0008 8638h	MTU3	Timer buffer operation transfer mode register	TBTM	8	8	2 to 3 PCLK*8
0008 8639h	MTU4	Timer buffer operation transfer mode register	TBTM	8	8	2 to 3 PCLK*8
0008 8640h	MTU4	Timer A/D converter start request control register	TADCR	16	16	2 to 3 PCLK*8
0008 8644h	MTU4	Timer A/D converter start request cycle set register A	TADCORA	16	16	2 to 3 PCLK*8
0008 8646h	MTU4	Timer A/D converter start request cycle set register B	TADCORB	16	16	2 to 3 PCLK*8
0008 8648h	MTU4	Timer A/D converter start request cycle set buffer register A	TADCOBRA	16	16	2 to 3 PCLK*8
0008 864Ah	MTU4	Timer A/D converter start request cycle set buffer register B	TADCOBRB	16	16	2 to 3 PCLK*8
0008 8660h	MTUA	Timer waveform control register	TWCR	8	8	2 to 3 PCLK*8
0008 8680h	MTUA	Timer start register	TSTR	8	8	2 to 3 PCLK*8
0008 8681h	MTUA	Timer synchronous register	TSYR	8	8	2 to 3 PCLK*8
0008 8684h	MTUA	Timer read/write enable register	TRWER	8	8	2 to 3 PCLK*8
0008 8700h	MTU0	Timer control register	TCR	8	8	2 to 3 PCLK*8
0008 8701h	MTU0	Timer mode register	TMDR	8	8	2 to 3 PCLK*8
0008 8702h	MTU0	Timer I/O control register H	TIORH	8	8	2 to 3 PCLK*8
0008 8703h	MTU0	Timer I/O control register L	TIORL	8	8	2 to 3 PCLK*8
0008 8704h	MTU0	Timer interrupt enable register	TIER	8	8	2 to 3 PCLK*8
0008 8705h	MTU0	Timer status register	TSR	8	8	2 to 3 PCLK*8
0008 8706h	MTU0	Timer counter	TCNT	16	16	2 to 3 PCLK*8
0008 8708h	MTU0	Timer general register A	TGRA	16	16	2 to 3 PCLK*8
0008 870Ah	MTU0	Timer general register B	TGRB	16	16	2 to 3 PCLK*8
0008 870Ch	MTU0	Timer general register C	TGRC	16	16	2 to 3 PCLK*8
0008 870Eh	MTU0	Timer general register D	TGRD	16	16	2 to 3 PCLK*8
0008 8720h	MTU0	Timer general register E	TGRE	16	16	2 to 3 PCLK*8
0008 8722h	MTU0	Timer general register F	TGRF	16	16	2 to 3 PCLK*8
0008 8724h	MTU0	Timer interrupt enable register 2	TIER2	8	8	2 to 3 PCLK*8

Table 4.1 List of I/O Registers (Address Order) (22 / 36)

Address	Module Abbreviation	Register Name	Register Abbreviation	Number of Bits	Access Size	Number of Access Cycles
0008 8726h	MTU0	Timer buffer operation transfer mode register	TBTM	8	8	2 to 3 PCLK*8
0008 8780h	MTU1	Timer control register	TCR	8	8	2 to 3 PCLK*8
0008 8781h	MTU1	Timer mode register	TMDR	8	8	2 to 3 PCLK*8
0008 8782h	MTU1	Timer I/O control register	TIOR	8	8	2 to 3 PCLK*8
0008 8784h	MTU1	Timer interrupt enable register	TIER	8	8	2 to 3 PCLK*8
0008 8785h	MTU1	Timer status register	TSR	8	8	2 to 3 PCLK*8
0008 8786h	MTU1	Timer counter	TCNT	16	16	2 to 3 PCLK*8
0008 8788h	MTU1	Timer general register A	TGRA	16	16	2 to 3 PCLK*8
0008 878Ah	MTU1	Timer general register B	TGRB	16	16	2 to 3 PCLK*8
0008 8790h	MTU1	Timer input capture control register	TICCR	8	8	2 to 3 PCLK*8
0008 8800h	MTU2	Timer control register	TCR	8	8	2 to 3 PCLK*8
0008 8801h	MTU2	Timer mode register	TMDR	8	8	2 to 3 PCLK*8
0008 8802h	MTU2	Timer I/O control register	TIOR	8	8	2 to 3 PCLK*8
0008 8804h	MTU2	Timer interrupt enable register	TIER	8	8	2 to 3 PCLK*8
0008 8805h	MTU2	Timer status register	TSR	8	8	2 to 3 PCLK*8
0008 8806h	MTU2	Timer counter	TCNT	16	16	2 to 3 PCLK*8
0008 8808h	MTU2	Timer general register A	TGRA	16	16	2 to 3 PCLK*8
0008 880Ah	MTU2	Timer general register B	TGRB	16	16	2 to 3 PCLK*8
0008 8880h	MTU5	Timer counter U	TCNTU	16	16	2 to 3 PCLK*8
0008 8882h	MTU5	Timer general register U	TGRU	16	16	2 to 3 PCLK*8
0008 8884h	MTU5	Timer control register U	TCRU	8	8	2 to 3 PCLK*8
0008 8886h	MTU5	Timer I/O control register U	TIORU	8	8	2 to 3 PCLK*8
0008 8890h	MTU5	Timer counter V	TCNTV	16	16	2 to 3 PCLK*8
0008 8892h	MTU5	Timer general register V	TGRV	16	16	2 to 3 PCLK*8
0008 8894h	MTU5	Timer control register V	TCRV	8	8	2 to 3 PCLK*8
0008 8896h	MTU5	Timer I/O control register V	TIORV	8	8	2 to 3 PCLK*8
0008 88A0h	MTU5	Timer counter W	TCNTW	16	16	2 to 3 PCLK*8
0008 88A2h	MTU5	Timer general register W	TGRW	16	16	2 to 3 PCLK*8
0008 88A4h	MTU5	Timer control register W	TCRW	8	8	2 to 3 PCLK*8
0008 88A6h	MTU5	Timer I/O control register W	TIORW	8	8	2 to 3 PCLK*8
0008 88B2h	MTU5	Timer interrupt enable register	TIER	8	8	2 to 3 PCLK*8
0008 88B4h	MTU5	Timer start register	TSTR	8	8	2 to 3 PCLK*8
0008 88B6h	MTU5	Timer compare match clear register	TCNTCMPCLR	8	8	2 to 3 PCLK*8
0008 8900h	POE	Input level control/status register 1	ICSR1	16	16	2 to 3 PCLK*8
0008 8902h	POE	Output level control/status register 1	OCSR1	16	16	2 to 3 PCLK*8
0008 8904h	POE	Input level control/status register 2	ICSR2	16	16	2 to 3 PCLK*8
0008 8906h	POE	Output level control/status register 2	OCSR2	16	16	2 to 3 PCLK*8
0008 8908h	POE	Input level control/status register 3	ICSR3	16	16	2 to 3 PCLK*8
0008 890Ah	POE	Software port output enable register	SPOER	8	8	2 to 3 PCLK*8
0008 890Bh	POE	Port output enable control register 1	POECR1	8	8	2 to 3 PCLK*8
0008 890Ch	POE	Port output enable control register 2	POECR2	16	16	2 to 3 PCLK*8
0008 890Eh	POE	Input level control/status register 4	ICSR4	16	16	2 to 3 PCLK*8
0008 8A00h	MTU9	Timer control register	TCR	8	8	2 to 3 PCLK*8

Table 4.1 List of I/O Registers (Address Order) (23 / 36)

Address	Module Abbreviation	Register Name	Register Abbreviation	Number of Bits	Access Size	Number of Access Cycles
0008 8A01h	MTU10	Timer control register	TCR	8	8	2 to 3 PCLK*8
0008 8A02h	MTU9	Timer mode register	TMDR	8	8	2 to 3 PCLK*8
0008 8A03h	MTU10	Timer mode register	TMDR	8	8	2 to 3 PCLK*8
0008 8A04h	MTU9	Timer I/O control register H	TIORH	8	8	2 to 3 PCLK*8
0008 8A05h	MTU9	Timer I/O control register L	TIORL	8	8	2 to 3 PCLK*8
0008 8A06h	MTU10	Timer I/O control register H	TIORH	8	8	2 to 3 PCLK*8
0008 8A07h	MTU10	Timer I/O control register L	TIORL	8	8	2 to 3 PCLK*8
0008 8A08h	MTU9	Timer interrupt enable register	TIER	8	8	2 to 3 PCLK*8
0008 8A09h	MTU10	Timer interrupt enable register	TIER	8	8	2 to 3 PCLK*8
0008 8A0Ah	MTUB	Timer output master enable register	TOER	8	8	2 to 3 PCLK*8
0008 8A0Dh	MTUB	Timer gate control register	TGCR	8	8	2 to 3 PCLK*8
0008 8A0Eh	MTUB	Timer output control register 1	TOCR1	8	8	2 to 3 PCLK*8
0008 8A0Fh	MTUB	Timer output control register 2	TOCR2	8	8	2 to 3 PCLK*8
0008 8A10h	MTU9	Timer counter	TCNT	16	16	2 to 3 PCLK*8
0008 8A12h	MTU10	Timer counter	TCNT	16	16	2 to 3 PCLK*8
0008 8A14h	MTUB	Timer cycle data register	TCDR	16	16	2 to 3 PCLK*8
0008 8A16h	MTUB	Timer dead time data register	TDDR	16	16	2 to 3 PCLK*8
0008 8A18h	MTU9	Timer general register A	TGRA	16	16	2 to 3 PCLK*8
0008 8A1Ah	MTU9	Timer general register B	TGRB	16	16	2 to 3 PCLK*8
0008 8A1Ch	MTU10	Timer general register A	TGRA	16	16	2 to 3 PCLK*8
0008 8A1Eh	MTU10	Timer general register B	TGRB	16	16	2 to 3 PCLK*8
0008 8A20h	MTUB	Timer subcounter	TCNTS	16	16	2 to 3 PCLK*8
0008 8A22h	MTUB	MTUB Timer cycle buffer register	TCBR	16	16	2 to 3 PCLK*8
0008 8A24h	MTU9	Timer general register C	TGRC	16	16	2 to 3 PCLK*8
0008 8A26h	MTU9	Timer general register D	TGRD	16	16	2 to 3 PCLK*8
0008 8A28h	MTU10	Timer general register C	TGRC	16	16	2 to 3 PCLK*8
0008 8A2Ah	MTU10	Timer general register D	TGRD	16	16	2 to 3 PCLK*8
0008 8A2Ch	MTU9	Timer status register	TSR	8	8	2 to 3 PCLK*8
0008 8A2Dh	MTU10	Timer status register	TSR	8	8	2 to 3 PCLK*8
0008 8A30h	MTUB	Timer interrupt skipping set register	TITCR	8	8	2 to 3 PCLK*8
0008 8A31h	MTUB	Timer interrupt skipping counter	TITCNT	8	8	2 to 3 PCLK*8
0008 8A32h	MTUB	TUB Timer dead time enable register	TBTER	8	8	2 to 3 PCLK*8
0008 8A34h	MTUB	Timer dead time enable register	TDER	8	8	2 to 3 PCLK*8
0008 8A36h	MTUB	Timer output level buffer register	TOLBR	8	8	2 to 3 PCLK*8
0008 8A38h	MTU9	Timer buffer operation transfer mode register	TBTM	8	8	2 to 3 PCLK*8
0008 8A39h	MTU10	Timer buffer operation transfer mode register	TBTM	8	8	2 to 3 PCLK*8
0008 8A40h	MTU10	Timer A/D converter start request control register	TADCR	16	16	2 to 3 PCLK*8
0008 8A44h	MTU10	Timer A/D converter start request cycle set register A	TADCORA	16	16	2 to 3 PCLK*8
0008 8A46h	MTU10	Timer A/D converter start request cycle set register B	TADCORB	16	16	2 to 3 PCLK*8
0008 8A48h	MTU10	Timer A/D converter start request cycle set buffer register A	TADCOBRA	16	16	2 to 3 PCLK*8

Table 4.1 List of I/O Registers (Address Order) (24 / 36)

Address	Module Abbreviation	Register Name	Register Abbreviation	Number of Bits	Access Size	Number of Access Cycles
0008 8A4Ah	MTU10	Timer A/D converter start request cycle set buffer register B	TADCOBRB	16	16	2 to 3 PCLK*8
0008 8A60h	MTUB	Timer waveform control register	TWCR	8	8	2 to 3 PCLK*8
0008 8A80h	MTUB	Timer start register	TSTR	8	8	2 to 3 PCLK*8
0008 8A81h	MTUB	MTUB Timer synchronous register	TSYR	8	8	2 to 3 PCLK*8
0008 8A84h	MTUB	MTUB Timer read/write enable register	TRWER	8	8	2 to 3 PCLK*8
0008 8B00h	MTU6	Timer control register	TCR	8	8	2 to 3 PCLK*8
0008 8B01h	MTU6	Timer mode register	TMDR	8	8	2 to 3 PCLK*8
0008 8B02h	MTU6	Timer I/O control register H	TIORH	8	8	2 to 3 PCLK*8
0008 8B03h	MTU6	Timer I/O control register L	TIORL	8	8	2 to 3 PCLK*8
0008 8B04h	MTU6	Timer interrupt enable register	TIER	8	8	2 to 3 PCLK*8
0008 8B05h	MTU6	Timer status register	TSR	8	8	2 to 3 PCLK*8
0008 8B06h	MTU6	Timer counter	TCNT	16	16	2 to 3 PCLK*8
0008 8B08h	MTU6	Timer general register A	TGRA	16	16	2 to 3 PCLK*8
0008 8B0Ah	MTU6	Timer general register B	TGRB	16	16	2 to 3 PCLK*8
0008 8B0Ch	MTU6	Timer general register C	TGRC	16	16	2 to 3 PCLK*8
0008 8B0Eh	MTU6	Timer general register D	TGRD	16	16	2 to 3 PCLK*8
0008 8B20h	MTU6	Timer general register E	TGRE	16	16	2 to 3 PCLK*8
0008 8B22h	MTU6	Timer general register F	TGRF	16	16	2 to 3 PCLK*8
0008 8B24h	MTU6	Timer interrupt enable register 2	TIER2	8	8	2 to 3 PCLK*8
0008 8B26h	MTU6	Timer buffer operation transfer mode register	TBTM	8	8	2 to 3 PCLK*8
0008 8B80h	MTU7	Timer control register	TCR	8	8	2 to 3 PCLK*8
0008 8B81h	MTU7	Timer mode register	TMDR	8	8	2 to 3 PCLK*8
0008 8B82h	MTU7	Timer I/O control register	TIOR	8	8	2 to 3 PCLK*8
0008 8B84h	MTU7	Timer interrupt enable register	TIER	8	8	2 to 3 PCLK*8
0008 8B85h	MTU7	Timer status register	TSR	8	8	2 to 3 PCLK*8
0008 8B86h	MTU7	Timer counter	TCNT	16	16	2 to 3 PCLK*8
0008 8B88h	MTU7	Timer general register A	TGRA	16	16	2 to 3 PCLK*8
0008 8B8Ah	MTU7	Timer general register B	TGRB	16	16	2 to 3 PCLK*8
0008 8B90h	MTU7	Timer input capture control register	TICCR	8	8	2 to 3 PCLK*8
0008 8C00h	MTU8	Timer control register	TCR	8	8	2 to 3 PCLK*8
0008 8C01h	MTU8	Timer mode register	TMDR	8	8	2 to 3 PCLK*8
0008 8C02h	MTU8	Timer I/O control register	TIOR	8	8	2 to 3 PCLK*8
0008 8C04h	MTU8	Timer interrupt enable register	TIER	8	8	2 to 3 PCLK*8
0008 8C05h	MTU8	Timer status register	TSR	8	8	2 to 3 PCLK*8
0008 8C06h	MTU8	Timer counter	TCNT	16	16	2 to 3 PCLK*8
0008 8C08h	MTU8	Timer general register A	TGRA	16	16	2 to 3 PCLK*8
0008 8C0Ah	MTU8	Timer general register B	TGRB	16	16	2 to 3 PCLK*8
0008 8C80h	MTU11	Timer counter U	TCNTU	16	16	2 to 3 PCLK*8
0008 8C82h	MTU11	Timer general register U	TGRU	16	16	2 to 3 PCLK*8
0008 8C84h	MTU11	Timer control register U	TCRU	8	8	2 to 3 PCLK*8
0008 8C86h	MTU11	Timer I/O control register U	TIORU	8	8	2 to 3 PCLK*8
0008 8C90h	MTU11	Timer counter V	TCNTV	16	16	2 to 3 PCLK*8
0008 8C92h	MTU11	Timer general register V	TGRV	16	16	2 to 3 PCLK*8

Table 4.1 List of I/O Registers (Address Order) (25 / 36)

Address	Module Abbreviation	Register Name	Register Abbreviation	Number of Bits	Access Size	Number of Access Cycles
0008 8C94h	MTU11	Timer control register V	TCRV	8	8	2 to 3 PCLK*8
0008 8C96h	MTU11	Timer I/O control register V	TIORV	8	8	2 to 3 PCLK*8
0008 8CA0h	MTU11	Timer counter W	TCNTW	16	16	2 to 3 PCLK*8
0008 8CA2h	MTU11	Timer general register W	TGRW	16	16	2 to 3 PCLK*8
0008 8CA4h	MTU11	Timer control register W	TCRW	8	8	2 to 3 PCLK*8
0008 8CA6h	MTU11	Timer I/O control register W	TIORW	8	8	2 to 3 PCLK*8
0008 8CB2h	MTU11	Timer interrupt enable register	TIER	8	8	2 to 3 PCLK*8
0008 8CB4h	MTU11	Timer start register	TSTR	8	8	2 to 3 PCLK*8
0008 8CB6h	MTU11	Timer compare match clear register	TCNTCMPCLR	8	8	2 to 3 PCLK*8
0008 9000h	S12AD	A/D control register	ADCSR	8	8	2 to 3 PCLK*8
0008 9004h	S12AD	A/D channel select register	ADANS	16	16	2 to 3 PCLK*8
0008 9008h	S12AD	A/D-converted value addition mode select register	ADADS	16	16	2 to 3 PCLK*8
0008 900Ch	S12AD	A/D-converted value addition count select register	ADADC	8	8	2 to 3 PCLK*8
0008 900Eh	S12AD	A/D control extended register	ADCER	16	16	2 to 3 PCLK*8
0008 9010h	S12AD	A/D start trigger select register	ADSTRGR	8	8	2 to 3 PCLK*8
0008 9020h	S12AD	A/D data register 0	ADDR0	16	16	2 to 3 PCLK*8
0008 9022h	S12AD	A/D data register 1	ADDR1	16	16	2 to 3 PCLK*8
0008 9024h	S12AD	A/D data register 2	ADDR2	16	16	2 to 3 PCLK*8
0008 9026h	S12AD	A/D data register 3	ADDR3	16	16	2 to 3 PCLK*8
0008 9028h	S12AD	A/D data register 4	ADDR4	16	16	2 to 3 PCLK*8
0008 902Ah	S12AD	A/D data register 5	ADDR5	16	16	2 to 3 PCLK*8
0008 902Ch	S12AD	A/D data register 6	ADDR6	16	16	2 to 3 PCLK*8
0008 902Eh	S12AD	A/D data register 7	ADDR7	16	16	2 to 3 PCLK*8
0008 C000h	PORT0	Data direction register	DDR	8	8	2 to 3 PCLK*8
0008 C001h	PORT1	Data direction register	DDR	8	8	2 to 3 PCLK*8
0008 C002h	PORT2	Data direction register	DDR	8	8	2 to 3 PCLK*8
0008 C003h	PORT3	Data direction register	DDR	8	8	2 to 3 PCLK*8
0008 C004h	PORT4	Data direction register	DDR	8	8	2 to 3 PCLK*8
0008 C005h	PORT5	Data direction register	DDR	8	8	2 to 3 PCLK*8
0008 C006h	PORT6	Data direction register	DDR*6*7	8	8	2 to 3 PCLK*8
0008 C007h	PORT7	Data direction register	DDR*6*7	8	8	2 to 3 PCLK*8
0008 C008h	PORT8	Data direction register	DDR*6*7	8	8	2 to 3 PCLK*8
0008 C009h	PORT9	Data direction register	DDR*6*7	8	8	2 to 3 PCLK*8
0008 C00Ah	PORTA	Data direction register	DDR	8	8	2 to 3 PCLK*8
0008 C00Bh	PORTB	Data direction register	DDR	8	8	2 to 3 PCLK*8
0008 C00Ch	PORTC	Data direction register	DDR	8	8	2 to 3 PCLK*8
0008 C00Dh	PORTD	Data direction register	DDR	8	8	2 to 3 PCLK*8
0008 C00Eh	PORTE	Data direction register	DDR*7	8	8	2 to 3 PCLK*8
0008 C00Fh	PORTF	Data direction register	DDR*5*6*7	8	8	2 to 3 PCLK*8
0008 C010h	PORTG	Data direction register	DDR*5*6*7	8	8	2 to 3 PCLK*8
0008 C020h	PORT0	Data register	DR	8	8	2 to 3 PCLK*8
0008 C021h	PORT1	Data register	DR	8	8	2 to 3 PCLK*8
0008 C022h	PORT2	Data register	DR	8	8	2 to 3 PCLK*8

Table 4.1 List of I/O Registers (Address Order) (26 / 36)

Address	Module Abbreviation	Register Name	Register Abbreviation	Number of Bits	Access Size	Number of Access Cycles
0008 C023h	PORT3	Data register	DR	8	8	2 to 3 PCLK*8
0008 C024h	PORT4	Data register	DR	8	8	2 to 3 PCLK*8
0008 C025h	PORT5	Data register	DR	8	8	2 to 3 PCLK*8
0008 C026h	PORT6	Data register	DR*6*7	8	8	2 to 3 PCLK*8
0008 C027h	PORT7	Data register	DR*6*7	8	8	2 to 3 PCLK*8
0008 C028h	PORT8	Data register	DR*6*7	8	8	2 to 3 PCLK*8
0008 C029h	PORT9	Data register	DR*6*7	8	8	2 to 3 PCLK*8
0008 C02Ah	PORTA	Data register	DR	8	8	2 to 3 PCLK*8
0008 C02Bh	PORTB	Data register	DR	8	8	2 to 3 PCLK*8
0008 C02Ch	PORTC	Data register	DR	8	8	2 to 3 PCLK*8
0008 C02Dh	PORTD	Data register	DR	8	8	2 to 3 PCLK*8
0008 C02Eh	PORTE	Data register	DR*7	8	8	2 to 3 PCLK*8
0008 C02Fh	PORTF	Data register	DR*5*6*7	8	8	2 to 3 PCLK*8
0008 C030h	PORTG	Data register	DR**5*6*7	8	8	2 to 3 PCLK*8
0008 C040h	PORT0	Port register	PORT	8	8	2 to 3 PCLK*8
0008 C041h	PORT1	Port register	PORT	8	8	2 to 3 PCLK*8
0008 C042h	PORT2	Port register	PORT	8	8	2 to 3 PCLK*8
0008 C043h	PORT3	Port register	PORT	8	8	2 to 3 PCLK*8
0008 C044h	PORT4	Port register	PORT	8	8	2 to 3 PCLK*8
0008 C045h	PORT5	Port register	PORT	8	8	2 to 3 PCLK*8
0008 C046h	PORT6	Port register	PORT*6*7	8	8	2 to 3 PCLK*8
0008 C047h	PORT7	Port register	PORT*6*7	8	8	2 to 3 PCLK*8
0008 C048h	PORT8	Port register	PORT*6*7	8	8	2 to 3 PCLK*8
0008 C049h	PORT9	Port register	PORT*6*7	8	8	2 to 3 PCLK*8
0008 C04Ah	PORTA	Port register	PORT	8	8	2 to 3 PCLK*8
0008 C04Bh	PORTB	Port register	PORT	8	8	2 to 3 PCLK*8
0008 C04Ch	PORTC	Port register	PORT	8	8	2 to 3 PCLK*8
0008 C04Dh	PORTD	Port register	PORT	8	8	2 to 3 PCLK*8
0008 C04Eh	PORTE	Port register	PORT*7	8	8	2 to 3 PCLK*8
0008 C04Fh	PORTF	Port register	PORT*5*6*7	8	8	2 to 3 PCLK*8
0008 C050h	PORTG	Port register	PORT*5*6*7	8	8	2 to 3 PCLK*8
0008 C060h	PORT0	Input buffer control register	ICR	8	8	2 to 3 PCLK*8
0008 C061h	PORT1	Input buffer control register	ICR	8	8	2 to 3 PCLK*8
0008 C062h	PORT2	Input buffer control register	ICR	8	8	2 to 3 PCLK*8
0008 C063h	PORT3	Input buffer control register	ICR	8	8	2 to 3 PCLK*8
0008 C064h	PORT4	Input buffer control register	ICR	8	8	2 to 3 PCLK*8
0008 C065h	PORT5	Input buffer control register	ICR	8	8	2 to 3 PCLK*8
0008 C066h	PORT6	Input buffer control register	ICR*6*7	8	8	2 to 3 PCLK*8
0008 C067h	PORT7	Input buffer control register	ICR*6*7	8	8	2 to 3 PCLK*8
0008 C068h	PORT8	Input buffer control register	ICR*6*7	8	8	2 to 3 PCLK*8
0008 C069h	PORT9	Input buffer control register	ICR*6*7	8	8	2 to 3 PCLK*8
0008 C06Ah	PORTA	Input buffer control register	ICR	8	8	2 to 3 PCLK*8
0008 C06Bh	PORTB	Input buffer control register	ICR	8	8	2 to 3 PCLK*8
0008 C06Ch	PORTC	Input buffer control register	ICR	8	8	2 to 3 PCLK*8
0008 C06Dh	PORTD	Input buffer control register	ICR	8	8	2 to 3 PCLK*8

Table 4.1 List of I/O Registers (Address Order) (27 / 36)

Address	Module Abbreviation	Register Name	Register Abbreviation	Number of Bits	Access Size	Number of Access Cycles
0008 C06Eh	PORTE	Input buffer control register	ICR*7	8	8	2 to 3 PCLK*8
0008 C06Fh	PORTF	Input buffer control register	ICR*5*6*7	8	8	2 to 3 PCLK*8
0008 C070h	PORTG	Input buffer control register	ICR*5*6*7	8	8	2 to 3 PCLK*8
0008 C080h	PORT0	Open drain control register	ODR	8	8	2 to 3 PCLK*8
0008 C081h	PORT1	Open drain control register	ODR	8	8	2 to 3 PCLK*8
0008 C082h	PORT2	Open drain control register	ODR	8	8	2 to 3 PCLK*8
0008 C083h	PORT3	Open drain control register	ODR	8	8	2 to 3 PCLK*8
0008 C08Ch	PORTC	Open drain control register	ODR	8	8	2 to 3 PCLK*8
0008 C0C9h	PORT9	Pull-up resistor control register	PCR*6*7	8	8	2 to 3 PCLK*8
0008 C0CAh	PORTA	Pull-up resistor control register	PCR	8	8	2 to 3 PCLK*8
0008 C0CBh	PORTB	Pull-up resistor control register	PCR	8	8	2 to 3 PCLK*8
0008 C0CCh	PORTC	Pull-up resistor control register	PCR	8	8	2 to 3 PCLK*8
0008 C0CDh	PORTD	Pull-up resistor control register	PCR	8	8	2 to 3 PCLK*8
0008 C0CEh	PORTE	Pull-up resistor control register	PCR*7	8	8	2 to 3 PCLK*8
0008 C0D0h	PORTG	Pull-up resistor control register	PCR*5*6*7	8	8	2 to 3 PCLK*8
0008 C100h	IOPORT	Port function register 0	PF0CSE	8	8	2 to 3 PCLK*8
0008 C101h	IOPORT	Port function register 1	PF1CSS*6*7	8	8	2 to 3 PCLK*8
0008 C102h	IOPORT	Port function register 2	PF2CSS*6*7	8	8	2 to 3 PCLK*8
0008 C103h	IOPORT	Port function register 3	PF3BUS	8	8	2 to 3 PCLK*8
0008 C104h	IOPORT	Port function register 4	PF4BUS	8	8	2 to 3 PCLK*8
0008 C105h	IOPORT	Port function register 5	PF5BUS	8	8	2 to 3 PCLK*8
0008 C106h	IOPORT	Port function register 6	PF6BUS	8	8	2 to 3 PCLK*8
0008 C107h	IOPORT	Port function register 7	PF7DMA	8	8	2 to 3 PCLK*8
0008 C108h	IOPORT	Port function register 8	PF8IRQ	8	8	2 to 3 PCLK*8
0008 C109h	IOPORT	Port function register 9	PF9IRQ	8	8	2 to 3 PCLK*8
0008 C10Ah	IOPORT	Port function register A	PFAADC	8	8	2 to 3 PCLK*8
0008 C10Bh	IOPORT	Port function register B	PFBTMR	8	8	2 to 3 PCLK*8
0008 C10Ch	IOPORT	Port function register C	PFCMTU	8	8	2 to 3 PCLK*8
0008 C10Dh	IOPORT	Port function register D	PFDMTU	8	8	2 to 3 PCLK*8
0008 C10Eh	IOPORT	Port function register E	PFENET	8	8	2 to 3 PCLK*8
0008 C10Fh	IOPORT	Port function register F	PFFSCI	8	8	2 to 3 PCLK*8
0008 C110h	IOPORT	Port function register G	PFGSPI	8	8	2 to 3 PCLK*8
0008 C111h	IOPORT	Port function register H	PFHSPI	8	8	2 to 3 PCLK*8
0008 C113h	IOPORT	Port function register J	PFJCAN	8	8	2 to 3 PCLK*8
0008 C114h	IOPORT	Port function register K	PFKUSB	8	8	2 to 3 PCLK*8
0008 C115h	IOPORT	Port function register L	PFLUSB*6*7	8	8	2 to 3 PCLK*8
0008 C116h	IOPORT	Port function register M	PFMPOE*7	8	8	2 to 3 PCLK*8
0008 C117h	IOPORT	Port function register N	PFNPOE*7	8	8	2 to 3 PCLK*8
0008 C280h	SYSTEM	Deep standby control register	DPSBYCR	8	8	4 to 5 PCLK*8
0008 C281h	SYSTEM	Deep standby wait control register	DPSWCR	8	8	4 to 5 PCLK*8
0008 C282h	SYSTEM	Deep standby interrupt enable register	DPSIER	8	8	4 to 5 PCLK*8
0008 C283h	SYSTEM	Deep standby interrupt flag register	DPSIFR	8	8	4 to 5 PCLK*8
0008 C284h	SYSTEM	Deep standby interrupt edge register	DPSIEGR	8	8	4 to 5 PCLK*8
0008 C285h	SYSTEM	Reset status register	RSTSR	8	8	4 to 5 PCLK*8
0008 C289h	FLASH	Flash write erase protection register	FWEPROR	8	8	4 to 5 PCLK*8

Table 4.1 List of I/O Registers (Address Order) (28 / 36)

Address	Module Abbreviation	Register Name	Register Abbreviation	Number of Bits	Access Size	Number of Access Cycles
0008 C28Ah	SYSTEM	Sub-clock oscillator control register	SUBOSCCR	8	8	4 to 5 PCLK*8
0008 C28Ch	SYSTEM	Key code register for voltage detection control register	LVDKEYR	8	8	4 to 5 PCLK*8
0008 C28Dh	SYSTEM	Voltage detection control register	LVDCR	8	8	4 to 5 PCLK*8
0008 C290h	SYSTEM	Deep standby backup register 0	DPSBKR0	8	8	4 to 5 PCLK*8
0008 C291h	SYSTEM	Deep standby backup register 1	DPSBKR1	8	8	4 to 5 PCLK*8
0008 C292h	SYSTEM	Deep standby backup register 2	DPSBKR2	8	8	4 to 5 PCLK*8
0008 C293h	SYSTEM	Deep standby backup register 3	DPSBKR3	8	8	4 to 5 PCLK*8
0008 C294h	SYSTEM	Deep standby backup register 4	DPSBKR4	8	8	4 to 5 PCLK*8
0008 C295h	SYSTEM	Deep standby backup register 5	DPSBKR5	8	8	4 to 5 PCLK*8
0008 C296h	SYSTEM	Deep standby backup register 6	DPSBKR6	8	8	4 to 5 PCLK*8
0008 C297h	SYSTEM	Deep standby backup register 7	DPSBKR7	8	8	4 to 5 PCLK*8
0008 C298h	SYSTEM	Deep standby backup register 8	DPSBKR8	8	8	4 to 5 PCLK*8
0008 C299h	SYSTEM	Deep standby backup register 9	DPSBKR9	8	8	4 to 5 PCLK*8
0008 C29Ah	SYSTEM	Deep standby backup register 10	DPSBKR10	8	8	4 to 5 PCLK*8
0008 C29Bh	SYSTEM	Deep standby backup register 11	DPSBKR11	8	8	4 to 5 PCLK*8
0008 C29Ch	SYSTEM	Deep standby backup register 12	DPSBKR12	8	8	4 to 5 PCLK*8
0008 C29Dh	SYSTEM	Deep standby backup register 13	DPSBKR13	8	8	4 to 5 PCLK*8
0008 C29Eh	SYSTEM	Deep standby backup register 14	DPSBKR14	8	8	4 to 5 PCLK*8
0008 C29Fh	SYSTEM	Deep standby backup register 15	DPSBKR15	8	8	4 to 5 PCLK*8
0008 C2A0h	SYSTEM	Deep standby backup register 16	DPSBKR16	8	8	4 to 5 PCLK*8
0008 C2A1h	SYSTEM	Deep standby backup register 17	DPSBKR17	8	8	4 to 5 PCLK*8
0008 C2A2h	SYSTEM	Deep standby backup register 18	DPSBKR18	8	8	4 to 5 PCLK*8
0008 C2A3h	SYSTEM	Deep standby backup register 19	DPSBKR19	8	8	4 to 5 PCLK*8
0008 C2A4h	SYSTEM	Deep standby backup register 20	DPSBKR20	8	8	4 to 5 PCLK*8
0008 C2A5h	SYSTEM	Deep standby backup register 21	DPSBKR21	8	8	4 to 5 PCLK*8
0008 C2A6h	SYSTEM	Deep standby backup register 22	DPSBKR22	8	8	4 to 5 PCLK*8
0008 C2A7h	SYSTEM	Deep standby backup register 23	DPSBKR23	8	8	4 to 5 PCLK*8
0008 C2A8h	SYSTEM	Deep standby backup register 24	DPSBKR24	8	8	4 to 5 PCLK*8
0008 C2A9h	SYSTEM	Deep standby backup register 25	DPSBKR25	8	8	4 to 5 PCLK*8
0008 C2AAh	SYSTEM	Deep standby backup register 26	DPSBKR26	8	8	4 to 5 PCLK*8
0008 C2ABh	SYSTEM	Deep standby backup register 27	DPSBKR27	8	8	4 to 5 PCLK*8
0008 C2ACh	SYSTEM	Deep standby backup register 28	DPSBKR28	8	8	4 to 5 PCLK*8
0008 C2ADh	SYSTEM	Deep standby backup register 29	DPSBKR29	8	8	4 to 5 PCLK*8
0008 C2AEh	SYSTEM	Deep standby backup register 30	DPSBKR30	8	8	4 to 5 PCLK*8
0008 C2AFh	SYSTEM	Deep standby backup register 31	DPSBKR31	8	8	4 to 5 PCLK*8
0008 C400h	RTC	64-Hz counter	R64CNT	8	8	2 to 3 PCLK*8
0008 C402h	RTC	Second counter	RSECCNT	8	8	2 to 3 PCLK*8
0008 C404h	RTC	Minute counter	RMINCNT	8	8	2 to 3 PCLK*8
0008 C406h	RTC	Hour counter	RHRCNT	8	8	2 to 3 PCLK*8
0008 C408h	RTC	Day-of-week counter	RWKCNT	8	8	2 to 3 PCLK*8
0008 C40Ah	RTC	Date counter	RDAYCNT	8	8	2 to 3 PCLK*8
0008 C40Ch	RTC	Month counter	RMONCNT	8	8	2 to 3 PCLK*8
0008 C40Eh	RTC	Year counter	RYRCNT	16	16	2 to 3 PCLK*8
0008 C410h	RTC	Second alarm register	RSECAR	8	8	2 to 3 PCLK*8

Table 4.1 List of I/O Registers (Address Order) (29 / 36)

Address	Module Abbreviation	Register Name	Register Abbreviation	Number of Bits	Access Size	Number of Access Cycles
0008 C412h	RTC	Minute alarm register	RMINAR	8	8	2 to 3 PCLK*8
0008 C414h	RTC	Hour alarm register	RHRAR	8	8	2 to 3 PCLK*8
0008 C416h	RTC	Day-of-week alarm register	RWKAR	8	8	2 to 3 PCLK*8
0008 C418h	RTC	Date alarm register	RDAYAR	8	8	2 to 3 PCLK*8
0008 C41Ah	RTC	Month alarm register	RMONAR	8	8	2 to 3 PCLK*8
0008 C41Ch	RTC	Year alarm register	RYRAR	16	16	2 to 3 PCLK*8
0008 C41Eh	RTC	Year alarm enable register	RYRAREN	8	8	2 to 3 PCLK*8
0008 C422h	RTC	RTC control register 1	RCR1	8	8	2 to 3 PCLK*8
0008 C424h	RTC	RTC control register 2	RCR2	8	8	2 to 3 PCLK*8
0009 0200h to 0009 03FFh	CAN0	Mailbox registers 0 to 31	MB0 to MB31	128	8, 16, 32	2 to 3 PCLK*8
0009 0400h	CAN0	Mask register 0	MKR0	32	8, 16, 32	2 to 3 PCLK*8
0009 0404h	CAN0	Mask register 1	MKR1	32	8, 16, 32	2 to 3 PCLK*8
0009 0408h	CAN0	Mask register 2	MKR2	32	8, 16, 32	2 to 3 PCLK*8
0009 040Ch	CAN0	Mask register 3	MKR3	32	8, 16, 32	2 to 3 PCLK*8
0009 0410h	CAN0	Mask register 4	MKR4	32	8, 16, 32	2 to 3 PCLK*8
0009 0414h	CAN0	Mask register 5	MKR5	32	8, 16, 32	2 to 3 PCLK*8
0009 0418h	CAN0	Mask register 6	MKR6	32	8, 16, 32	2 to 3 PCLK*8
0009 041Ch	CAN0	Mask register 7	MKR7	32	8, 16, 32	2 to 3 PCLK*8
0009 0420h	CAN0	FIFO received ID compare register 0	FIDCR0	32	8, 16, 32	2 to 3 PCLK*8
0009 0424h	CAN0	FIFO received ID compare register 1	FIDCR1	32	8, 16, 32	2 to 3 PCLK*8
0009 0428h	CAN0	Mask invalid register	MKIVLR	32	8, 16, 32	2 to 3 PCLK*8
0009 042Ch	CAN0	Mailbox interrupt enable register	MIER	32	8, 16, 32	2 to 3 PCLK*8
0009 0820h to 0009 083Fh	CAN0	Message control registers 0 to 31	MCTL0 to MCTL31	8	8	2 to 3 PCLK*8
0009 0840h	CAN0	Control register	CTLR	16	8, 16	2 to 3 PCLK*8
0009 0842h	CAN0	Status register	STR	16	8, 16	2 to 3 PCLK*8
0009 0844h	CAN0	Bit configuration register	BCR	32	8, 16, 32	2 to 3 PCLK*8
0009 0848h	CAN0	Receive FIFO control register	RFCR	8	8	2 to 3 PCLK*8
0009 0849h	CAN0	Receive FIFO pointer control register	RFPCR	8	8	2 to 3 PCLK*8
0009 084Ah	CAN0	Transmit FIFO control register	TFCR	8	8	2 to 3 PCLK*8
0009 084Bh	CAN0	Transmit FIFO pointer control register	TFPCR	8	8	2 to 3 PCLK*8
0009 084Ch	CAN0	Error interrupt enable register	EIER	8	8	2 to 3 PCLK*8
0009 084Dh	CAN0	Error interrupt factor judge register	EIFR	8	8	2 to 3 PCLK*8
0009 084Eh	CAN0	Receive error count register	RECR	8	8	2 to 3 PCLK*8
0009 084Fh	CAN0	Transmit error count register	TECR	8	8	2 to 3 PCLK*8
0009 0850h	CAN0	Error code store register	ECSR	8	8	2 to 3 PCLK*8
0009 0851h	CAN0	Channel search support register	CSSR	8	8	2 to 3 PCLK*8
0009 0852h	CAN0	Mailbox search status register	MSSR	8	8	2 to 3 PCLK*8
0009 0853h	CAN0	Mailbox search mode register	MSMR	8	8	2 to 3 PCLK*8
0009 0854h	CAN0	Time stamp register	TSR	16	8, 16	2 to 3 PCLK*8
0009 0856h	CAN0	Acceptance filter support register	AFSR	16	8, 16	2 to 3 PCLK*8
0009 0858h	CAN0	Test control register	TCR	8	8	2 to 3 PCLK*8
000A 0000h	USB0	System configuration control register	SYSCFG	16	16	3 to 4 PCLK*8
000A 0004h	USB0	System configuration status register 0	SYSSTS0	16	16	at least 9 PCLK*9

Table 4.1 List of I/O Registers (Address Order) (30 / 36)

Address	Module Abbreviation	Register Name	Register Abbreviation	Number of Bits	Access Size	Number of Access Cycles
000A 0008h	USB0	Device state control register 0	DVSTCTR0	16	16	at least 9 PCLK*9
000A 0014h	USB0	CFIFO port register	CFIFO	16	8, 16	3 to 4 PCLK*8
000A 0018h	USB0	D0FIFO port register	D0FIFO	16	8, 16	3 to 4 PCLK*8
000A 001Ch	USB0	D1FIFO port register	D1FIFO	16	8, 16	3 to 4 PCLK*8
000A 0020h	USB0	CFIFO port select register	CFIFOSEL	16	16	3 to 4 PCLK*8
000A 0022h	USB0	CFIFO port control register	CFIFOCTR	16	16	3 to 4 PCLK*8
000A 0028h	USB0	D0FIFO port select register	D0FIFOSEL	16	16	3 to 4 PCLK*8
000A 002Ah	USB0	D0FIFO port control register	D0FIFOCTR	16	16	3 to 4 PCLK*8
000A 002Ch	USB0	D1FIFO port select register	D1FIFOSEL	16	16	3 to 4 PCLK*8
000A 002Eh	USB0	D1FIFO port control register	D1FIFOCTR	16	16	3 to 4 PCLK*8
000A 0030h	USB0	Interrupt enable register 0	INTENB0	16	16	at least 9 PCLK*9
000A 0032h	USB0	Interrupt enable register 1	INTENB1	16	16	at least 9 PCLK*9
000A 0036h	USB0	BRDY interrupt enable register	BRDYENB	16	16	at least 9 PCLK*9
000A 0038h	USB0	NRDY interrupt enable register	NRDYENB	16	16	at least 9 PCLK*9
000A 003Ah	USB0	BEMP interrupt enable register	BEMPENB	16	16	at least 9 PCLK*9
000A 003Ch	USB0	SOF output configuration register	SOFCFG	16	16	at least 9 PCLK*9
000A 0040h	USB0	Interrupt status register 0	INTSTS0	16	16	at least 9 PCLK*9
000A 0042h	USB0	Interrupt status register 1	INTSTS1	16	16	at least 9 PCLK*9
000A 0046h	USB0	BRDY interrupt enable register	BRDYSTS	16	16	at least 9 PCLK*9
000A 0048h	USB0	NRDY interrupt status register	NRDYSTS	16	16	at least 9 PCLK*9
000A 004Ah	USB0	BEMP interrupt status register	BEMPSTS	16	16	at least 9 PCLK*9
000A 004Ch	USB0	Frame number register	FRMNUM	16	16	at least 9 PCLK*9
000A 004Eh	USB0	Device state change register	DVCHGR	16	16	at least 9 PCLK*9
000A 0050h	USB0	USB address register	USBADDR	16	16	at least 9 PCLK*9
000A 0054h	USB0	USB request type register	USBREQ	16	16	at least 9 PCLK*9
000A 0056h	USB0	USB request value register	USBVAL	16	16	at least 9 PCLK*9
000A 0058h	USB0	USB request index register	USBINDX	16	16	at least 9 PCLK*9
000A 005Ah	USB0	USB request length register	USBLENG	16	16	at least 9 PCLK*9
000A 005Ch	USB0	DCP configuration register	DCPCFG	16	16	at least 9 PCLK*9
000A 005Eh	USB0	DCP maximum packet size register	DCPMAXP	16	16	at least 9 PCLK*9

Table 4.1 List of I/O Registers (Address Order) (31 / 36)

Address	Module Abbreviation	Register Name	Register Abbreviation	Number of Bits	Access Size	Number of Access Cycles
000A 0060h	USB0	DCP control register	DCPCTR	16	16	at least 9 PCLK*9
000A 0064h	USB0	Pipe window select register	PIPESEL	16	16	at least 9 PCLK*9
000A 0068h	USB0	Pipe configuration register	PIPECFG	16	16	at least 9 PCLK*9
000A 006Ch	USB0	Pipe maximum packet size register	PIPEMAXP	16	16	at least 9 PCLK*9
000A 006Eh	USB0	Pipe cycle control register	PIPEPERI	16	16	at least 9 PCLK*9
000A 0070h	USB0	Pipe 1 control register	PIPE1CTR	16	16	at least 9 PCLK*9
000A 0072h	USB0	Pipe 2 control register	PIPE2CTR	16	16	at least 9 PCLK*9
000A 0074h	USB0	Pipe 3 control register	PIPE3CTR	16	16	at least 9 PCLK*9
000A 0076h	USB0	Pipe 4 control register	PIPE4CTR	16	16	at least 9 PCLK*9
000A 0078h	USB0	Pipe 5 control register	PIPE5CTR	16	16	at least 9 PCLK*9
000A 007Ah	USB0	Pipe 6 control register	PIPE6CTR	16	16	at least 9 PCLK*9
000A 007Ch	USB0	Pipe 7 control register	PIPE7CTR	16	16	at least 9 PCLK*9
000A 007Eh	USB0	Pipe 8 control register	PIPE8CTR	16	16	at least 9 PCLK*9
000A 0080h	USB0	Pipe 9 control register	PIPE9CTR	16	16	at least 9 PCLK*9
000A 0090h	USB0	Pipe 1 transaction counter enable register	PIPE1TRE	16	16	at least 9 PCLK*9
000A 0092h	USB0	Pipe 1 transaction counter register	PIPE1TRN	16	16	at least 9 PCLK*9
000A 0094h	USB0	Pipe 2 transaction counter enable register	PIPE2TRE	16	16	at least 9 PCLK*9
000A 0096h	USB0	Pipe 2 transaction counter register	PIPE2TRN	16	16	at least 9 PCLK*9
000A 0098h	USB0	Pipe 3 transaction counter enable register	PIPE3TRE	16	16	at least 9 PCLK*9
000A 009Ah	USB0	Pipe 3 transaction counter register	PIPE3TRN	16	16	at least 9 PCLK*9
000A 009Ch	USB0	Pipe 4 transaction counter enable register	PIPE4TRE	16	16	at least 9 PCLK*9
000A 009Eh	USB0	Pipe 4 transaction counter register	PIPE4TRN	16	16	at least 9 PCLK*9
000A 00A0h	USB0	Pipe 5 transaction counter enable register	PIPE5TRE	16	16	at least 9 PCLK*9
000A 00A2h	USB0	Pipe 5 transaction counter register	PIPE5TRN	16	16	at least 9 PCLK*9
000A 00D0h	USB0	Device address 0 configuration register	DEVADD0	16	16	at least 9 PCLK*9
000A 00D2h	USB0	Device address 1 configuration register	DEVADD1	16	16	at least 9 PCLK*9

Table 4.1 List of I/O Registers (Address Order) (32 / 36)

Address	Module Abbreviation	Register Name	Register Abbreviation	Number of Bits	Access Size	Number of Access Cycles
000A 00D4h	USB0	Device address 2 configuration register	DEVADD2	16	16	at least 9 PCLK*9
000A 00D6h	USB0	Device address 3 configuration register	DEVADD3	16	16	at least 9 PCLK*9
000A 00D8h	USB0	Device address 4 configuration register	DEVADD4	16	16	at least 9 PCLK*9
000A 00DAh	USB0	Device address 5 configuration register	DEVADD5	16	16	at least 9 PCLK*9
000A 0200h	USB1	System configuration control register	SYSCFG	16	16	3 to 4 PCLK*8
000A 0204h	USB1	System configuration status register 0	SYSSTS0	16	16	at least 9 PCLK*9
000A 0208h	USB1	Device state control register 0	DVSTCTR0	16	16	at least 9 PCLK*9
000A 0214h	USB1	CFIFO port register	CFIFO	16	8, 16	3 to 4 PCLK*8
000A 0218h	USB1	D0FIFO port register	D0FIFO	16	8, 16	3 to 4 PCLK*8
000A 021Ch	USB1	D1FIFO port register	D1FIFO	16	8, 16	3 to 4 PCLK*8
000A 0220h	USB1	CFIFO port select register	CFIFOSEL	16	16	3 to 4 PCLK*8
000A 0222h	USB1	CFIFO port control register	CFIFOCTR	16	16	3 to 4 PCLK*8
000A 0228h	USB1	D0FIFO port select register	D0FIFOSEL	16	16	3 to 4 PCLK*8
000A 022Ah	USB1	D0FIFO port control register	D0FIFOCTR	16	16	3 to 4 PCLK*8
000A 022Ch	USB1	D1FIFO port select register	D1FIFOSEL	16	16	3 to 4 PCLK*8
000A 022Eh	USB1	D1FIFO port control register	D1FIFOCTR	16	16	3 to 4 PCLK*8
000A 0230h	USB1	Interrupt enable register 0	INTENB0	16	16	at least 9 PCLK*9
000A 0232h	USB1	Interrupt enable register 1	INTENB1	16	16	at least 9 PCLK*9
000A 0236h	USB1	BRDY interrupt enable register	BRDYENB	16	16	at least 9 PCLK*9
000A 0238h	USB1	NRDY interrupt enable register	NRDYENB	16	16	at least 9 PCLK*9
000A 023Ah	USB1	BEMP interrupt enable register	BEMPENB	16	16	at least 9 PCLK*9
000A 023Ch	USB1	SOF output configuration register	SOFCFG	16	16	at least 9 PCLK*9
000A 0240h	USB1	Interrupt status register 0	INTSTS0	16	16	at least 9 PCLK*9
000A 0242h	USB1	Interrupt status register 1	INTSTS1	16	16	at least 9 PCLK*9
000A 0246h	USB1	BRDY interrupt status register	BRDYSTS	16	16	at least 9 PCLK*9
000A 0248h	USB1	NRDY interrupt status register	NRDYSTS	16	16	at least 9 PCLK*9
000A 024Ah	USB1	BEMP interrupt status register	BEMPSTS	16	16	at least 9 PCLK*9
000A 024Ch	USB1	Frame number register	FRMNUM	16	16	at least 9 PCLK*9
000A 024Eh	USB1	Device state change register	DVCHGR	16	16	at least 9 PCLK*9
000A 0250h	USB1	USB address register	USBADDR	16	16	at least 9 PCLK*9

Table 4.1 List of I/O Registers (Address Order) (33 / 36)

Address	Module Abbreviation	Register Name	Register Abbreviation	Number of Bits	Access Size	Number of Access Cycles
000A 0254h	USB1	USB request type register	USBREQ	16	16	at least 9 PCLK*9
000A 0256h	USB1	USB request value register	USBVAL	16	16	at least 9 PCLK*9
000A 0258h	USB1	USB request index register	USBINDX	16	16	at least 9 PCLK*9
000A 025Ah	USB1	USB request length register	USBLENG	16	16	at least 9 PCLK*9
000A 025Ch	USB1	DCP configuration register	DCPCFG	16	16	at least 9 PCLK*9
000A 025Eh	USB1	DCP maximum packet size register	DCPMAXP	16	16	at least 9 PCLK*9
000A 0260h	USB1	DCP control register	DCPCTR	16	16	at least 9 PCLK*9
000A 0264h	USB1	Pipe window select register	PIPESEL	16	16	at least 9 PCLK*9
000A 0268h	USB1	Pipe configuration register	PIPECFG	16	16	at least 9 PCLK*9
000A 026Ch	USB1	Pipe maximum packet size register	PIPEMAXP	16	16	at least 9 PCLK*9
000A 026Eh	USB1	Pipe cycle control register	PIPEPERI	16	16	at least 9 PCLK*9
000A 0270h	USB1	Pipe 1 control register	PIPE1CTR	16	16	at least 9 PCLK*9
000A 0272h	USB1	Pipe 2 control register	PIPE2CTR	16	16	at least 9 PCLK*9
000A 0274h	USB1	Pipe 3 control register	PIPE3CTR	16	16	at least 9 PCLK*9
000A 0276h	USB1	Pipe 4 control register	PIPE4CTR	16	16	at least 9 PCLK*9
000A 0278h	USB1	Pipe 5 control register	PIPE5CTR	16	16	at least 9 PCLK*9
000A 027Ah	USB1	Pipe 6 control register	PIPE6CTR	16	16	at least 9 PCLK*9
000A 027Ch	USB1	Pipe 7 control register	PIPE7CTR	16	16	at least 9 PCLK*9
000A 027Eh	USB1	Pipe 8 control register	PIPE8CTR	16	16	at least 9 PCLK*9
000A 0280h	USB1	Pipe 9 control register	PIPE9CTR	16	16	at least 9 PCLK*9
000A 0290h	USB1	Pipe 1 transaction counter enable register	PIPE1TRE	16	16	at least 9 PCLK*9
000A 0292h	USB1	Pipe 1 transaction counter register	PIPE1TRN	16	16	at least 9 PCLK*9
000A 0294h	USB1	Pipe 2 transaction counter enable register	PIPE2TRE	16	16	at least 9 PCLK*9
000A 0296h	USB1	Pipe 2 transaction counter register	PIPE2TRN	16	16	at least 9 PCLK*9
000A 0298h	USB1	Pipe 3 transaction counter enable register	PIPE3TRE	16	16	at least 9 PCLK*9
000A 029Ah	USB1	Pipe 3 transaction counter register	PIPE3TRN	16	16	at least 9 PCLK*9

Table 4.1 List of I/O Registers (Address Order) (34 / 36)

Address	Module Abbreviation	Register Name	Register Abbreviation	Number of Bits	Access Size	Number of Access Cycles
000A 029Ch	USB1	Pipe 4 transaction counter enable register	PIPE4TRE	16	16	at least 9 PCLK*9
000A 029Eh	USB1	Pipe 4 transaction counter register	PIPE4TRN	16	16	at least 9 PCLK*9
000A 02A0h	USB1	Pipe 5 transaction counter enable register	PIPE5TRE	16	16	at least 9 PCLK*9
000A 02A2h	USB1	Pipe 5 transaction counter register	PIPE5TRN	16	16	at least 9 PCLK*9
000A 02D0h	USB1	Device address 0 configuration register	DEVADD0	16	16	at least 9 PCLK*9
000A 02D2h	USB1	Device address 1 configuration register	DEVADD1	16	16	at least 9 PCLK*9
000A 02D4h	USB1	Device address 2 configuration register	DEVADD2	16	16	at least 9 PCLK*9
000A 02D6h	USB1	Device address 3 configuration register	DEVADD3	16	16	at least 9 PCLK*9
000A 02D8h	USB1	Device address 4 configuration register	DEVADD4	16	16	at least 9 PCLK*9
000A 02DAh	USB1	Device address 5 configuration register	DEVADD5	16	16	at least 9 PCLK*9
000A 0400h	USB	Deep standby USB transceiver control/ pin monitor register	DPUSR0R	32	32	1 to 2PCLK*8
000A 0404h	USB	Deep standby USB suspend/resume interrupt register	DPUSR1R	32	32	1 to 2PCLK*8
000C 0000h	EDMAC	EDMAC mode register	EDMR	32	32	4 to 5 ICLK
000C 0008h	EDMAC	EDMAC transmit request register	EDTRR	32	32	4 to 5 ICLK
000C 0010h	EDMAC	EDMAC receive request register	EDRRR	32	32	4 to 5 ICLK
000C 0018h	EDMAC	Transmit descriptor list start address register	TDLAR	32	32	4 to 5 ICLK
000C 0020h	EDMAC	Receive descriptor list start address register	RDLAR	32	32	4 to 5 ICLK
000C 0028h	EDMAC	ETHERC/EDMAC status register	EESR	32	32	4 to 5 ICLK
000C 0030h	EDMAC	ETHERC/EDMAC status interrupt permission register	EESIPR	32	32	4 to 5 ICLK
000C 0038h	EDMAC	Transmit/receive status copy enable register	TRSCER	32	32	4 to 5 ICLK
000C 0040h	EDMAC	Receive missed-frame counter register	RMFCR	32	32	4 to 5 ICLK
000C 0048h	EDMAC	Transmit FIFO threshold register	TFTR	32	32	4 to 5 ICLK
000C 0050h	EDMAC	FIFO depth register	FDR	32	32	4 to 5 ICLK
000C 0058h	EDMAC	Receiving method control register	RMCR	32	32	4 to 5 ICLK
000C 0064h	EDMAC	Transmit FIFO underrun counter	TFUCR	32	32	4 to 5 ICLK
000C 0068h	EDMAC	Receive FIFO overflow counter	RFOCR	32	32	4 to 5 ICLK
000C 006Ch	EDMAC	Independent output signal setting register	IOSR	32	32	4 to 5 ICLK
000C 0070h	EDMAC	Flow control start FIFO threshold setting register	FCFTR	32	32	4 to 5 ICLK
000C 0078h	EDMAC	Receive data padding insert register	RPADIR	32	32	4 to 5 ICLK
000C 007Ch	EDMAC	Transmit interrupt setting register	TRIMD	32	32	4 to 5 ICLK
000C 00C8h	EDMAC	Receive buffer write address register	RBWAR	32	32	4 to 5 ICLK
000C 00CCh	EDMAC	Receive descriptor fetch address register	RDFAR	32	32	4 to 5 ICLK

Table 4.1 List of I/O Registers (Address Order) (35 / 36)

Address	Module Abbreviation	Register Name	Register Abbreviation	Number of Bits	Access Size	Number of Access Cycles
000C 00D4h	EDMAC	Transmit buffer read address register	TBRAR	32	32	4 to 5 ICLK
000C 00D8h	EDMAC	Transmit descriptor fetch address register	TDFAR	32	32	4 to 5 ICLK
000C 0100h	ETHERC	ETHERC mode register	ECMR	32	32	4 to 5 ICLK
000C 0108h	ETHERC	Receive frame length register	RFLR	32	32	4 to 5 ICLK
000C 0110h	ETHERC	ETHERC status register	ECSR	32	32	4 to 5 ICLK
000C 0118h	ETHERC	ETHERC interrupt enable register	ECSIPR	32	32	4 to 5 ICLK
000C 0120h	ETHERC	PHY interface register	PIR	32	32	4 to 5 ICLK
000C 0128h	ETHERC	PHY status register	PSR	32	32	4 to 5 ICLK
000C 0140h	ETHERC	Random number generation counter upper limit setting register	RDMLR	32	32	4 to 5 ICLK
000C 0150h	ETHERC	IPG register	IPGR	32	32	4 to 5 ICLK
000C 0154h	ETHERC	Automatic PAUSE frame register	APR	32	32	4 to 5 ICLK
000C 0158h	ETHERC	Manual PAUSE frame register	MPR	32	32	4 to 5 ICLK
000C 0160h	ETHERC	PAUSE frame receive counter register	RFCF	32	32	4 to 5 ICLK
000C 0164h	ETHERC	Automatic PAUSE frame retransmit count register	TPAUSER	32	32	4 to 5 ICLK
000C 0168h	ETHERC	PAUSE frame retransmit counter register	TPAUSECR	32	32	4 to 5 ICLK
000C 016Ch	ETHERC	Broadcast frame receive count setting register	BCFRR	32	32	4 to 5 ICLK
000C 01C0h	ETHERC	MAC address high register	MAHR	32	32	4 to 5 ICLK
000C 01C8h	ETHERC	MAC address low register	MALR	32	32	4 to 5 ICLK
000C 01D0h	ETHERC	Transmit retry over counter register	TROCR	32	32	4 to 5 ICLK
000C 01D4h	ETHERC	Delayed collision detect counter register	CDCR	32	32	4 to 5 ICLK
000C 01D8h	ETHERC	Lost carrier counter register	LCCR	32	32	4 to 5 ICLK
000C 01DCh	ETHERC	Carrier not detect counter register	CNDCR	32	32	4 to 5 ICLK
000C 01E4h	ETHERC	CRC error frame receive counter register	CEFCR	32	32	4 to 5 ICLK
000C 01E8h	ETHERC	Frame receive error counter register	FRECR	32	32	4 to 5 ICLK
000C 01ECh	ETHERC	Too-short frame receive counter register	TSFRCR	32	32	4 to 5 ICLK
000C 01F0h	ETHERC	Too-long frame receive counter register	TLFRCR	32	32	4 to 5 ICLK
000C 01F4h	ETHERC	Residual-bit frame receive counter register	RFCR	32	32	4 to 5 ICLK
000C 01F8h	ETHERC	Multicast address frame receive counter register	MAFCR	32	32	4 to 5 ICLK
007F C402h	FLASH	Flash mode register	FMODR	8	8	2 to 3 PCLK*8
007F C410h	FLASH	Flash access status register	FASTAT	8	8	2 to 3 PCLK*8
007F C411h	FLASH	Flash access error interrupt enable register	FAEINT	8	8	2 to 3 PCLK*8
007F C412h	FLASH	Flash ready interrupt enable register	FRDYIE	8	8	2 to 3 PCLK*8
007F C440h	FLASH	Data flash read enable register0	DFLRE0	16	16	2 to 3 PCLK*8
007F C442h	FLASH	Data flash read enable register1	DFLRE1	16	16	2 to 3 PCLK*8
007F C450h	FLASH	Data flash programming/erasure enable register0	DFLWE0	16	16	2 to 3 PCLK*8
007F C452h	FLASH	Data flash programming/erasure enable register1	DFLWE1	16	16	2 to 3 PCLK*8
007F C454h	FLASH	FCU RAM enable register	FCURAME	16	16	2 to 3 PCLK*8
007F FFB0h	FLASH	Flash status register 0	FSTATR0	8	8	2 to 3 PCLK*8

Table 4.1 List of I/O Registers (Address Order) (36 / 36)

Address	Module Abbreviation	Register Name	Register Abbreviation	Number of Bits	Access Size	Number of Access Cycles
007F FFB1h	FLASH	Flash status register 1	FSTATR1	8	8	2 to 3 PCLK*8
007F FFB2h	FLASH	Flash P/E mode entry register	FENTRYR	16	16	2 to 3 PCLK*8
007F FFB4h	FLASH	Flash protect register	FPROTR	16	16	2 to 3 PCLK*8
007F FFB6h	FLASH	Flash reset register	FRESETR	16	16	2 to 3 PCLK*8
007F FFBAh	FLASH	FCU command register	FCMDR	16	16	2 to 3 PCLK*8
007F FFC8h	FLASH	FCU processing switching register	FCPSR	16	16	2 to 3 PCLK*8
007F FFCAh	FLASH	Data flash blank check control register	DFLBCCNT	16	16	2 to 3 PCLK*8
007F FFCCh	FLASH	Flash P/E status register	FPESTAT	16	16	2 to 3 PCLK*8
007F FFCEh	FLASH	Data flash blank check status register	DFLBCSTAT	16	16	2 to 3 PCLK*8
007F FFE8h	FLASH	Peripheral clock notification register	PCKAR	16	16	2 to 3 PCLK*8

Note 1. When the same output trigger is specified for pulse output groups 2 and 3 by the PPG0.PCR setting, the PPG0.NDRH address is 000881ECh. When different output triggers are specified, the PPG0.NDRH2 addresses for pulse output groups 2 and 3 are 000881EEh and 000881ECh, respectively.
Note 2. When the same output trigger is specified for pulse output groups 0 and 1 by the PPG0.PCR setting, the PPG0.NDRL address is 000881EDh. When different output triggers are specified, the PPG0.NDRL2 addresses for pulse output groups 0 and 1 are 000881EFh and 000881EDh, respectively.
Note 3. When the same output trigger is specified for pulse output groups 6 and 7 by the PPG1.PCR setting, the PPG1.NDRH address is 000881FCh. When different output triggers are specified, the PPG1.NDRH2 addresses for pulse output groups 6 and 7 are 000881FEh and 000881FCh, respectively.
Note 4. When the same output trigger is specified for pulse output groups 4 and 5 by the PPG1.PCR setting, the PPG1.NDRL address is 000881FDh. When different output triggers are specified, the PPG1.NDRL2 addresses for pulse output groups 4 and 5 are 000881FFh and 000881FDh, respectively.
Note 5. This register is not supported by the 145-pin TFLGA or 144-pin LQFP version.
Note 6. This register is not supported by the 100-pin LQFP version.
Note 7. This register is not supported by the 85-pin TFLGA version.
Note 8. The number of access states depends on the number of divided cycles for clock synchronization (0 to 1 PCLK, 0 to 1 BCLK).
Note 9. Access may be disabled if a register is accessed during the USB operation.

5. Electrical Characteristics

5.1 Absolute Maximum Ratings

Table 5.1 Absolute Maximum Ratings

Item	Symbol	Value	Unit
Power supply voltage	VCC PLLVCC VCC_USB	-0.3 to +4.6	V
Input voltage (except for ports 00 to 02, 07, ports 12, 13, 16, 17, ports 20, 21, port 33)	V_{IN}	-0.3 to VCC+0.3	V
Input voltage (ports 00 to 02, 07, ports 12, 13, 16, 17, ports 20, 21, port 33*1)	V_{IN}	-0.3 to +5.8	V
Reference power supply voltage	V_{REF}	-0.3 to VCC+0.3	V
Analog power supply voltage	AVCC*2	-0.3 to +4.6	V
Analog input voltage	V_{AN}	-0.3 to VCC+0.3	V
Operating temperature	T_{opr}	-40 to +85	°C
Storage temperature	T_{stg}	-55 to +125	°C

Caution: Permanent damage to the LSI may result if absolute maximum ratings are exceeded.

Note 1. Ports 00 to 02, 07, ports 12, 13, 16, 17, ports 20, 21, and port 33 are 5 V tolerant.

Note 2. Connect AVCC to VCC. When neither the A/D converter nor the D/A converter is in use, do not leave the AVCC, VREFH, AVSS, and VREFL pins open. Connect the AVCC and VREFH pins to VCC, and the AVSS and VREFL pins to VSS, respectively.

5.2 DC Characteristics

Table 5.2 DC Characteristics (1)

Conditions: VCC = PLLVCC = AVCC = VCC_USB = 2.7 to 3.6 V, VREFH = 2.7 V to AVCC
VSS = PLLVSS = AVSS = VREFL = VSS_USB = 0 V
T_a = -40 to +85°C

Item		Symbol	Min.	Typ.	Max.	Unit	Test Conditions
Schmitt trigger input voltage	IRQ input pin*1 MTU input pin*1 TMR input pin*1 SCI input pin*1 ADTRG input pin*1 RES#, NMI	V_{IH}	VCC × 0.8	—	VCC+0.3	V	
		V_{IL}	-0.3	—	VCC × 0.2		
		ΔV_T	VCC × 0.06	—	—		
	RIIC input pin (except for SMBus)	V_{IH}	VCC × 0.7	—	5.8		
		V_{IL}	-0.3	—	VCC × 0.3		
		ΔV_T	VCC × 0.05	—	—		
	Ports 00 to 02, 07 ports 12, 13, 16, 17 ports 20, 21 port 33	V_{IH}	VCC × 0.8	—	5.8		
		V_{IL}	-0.3	—	VCC × 0.2		
	Ports 03, 05, 10, 11, 14, 15 ports 22 to 27 ports 30 to 32, 34, 35 ports 4 to G Other input pins	V_{IH}	VCC × 0.8	—	VCC+0.3		
		V_{IL}	-0.3	—	VCC × 0.2		
Input high voltage (except Schmitt trigger input pin)	MD pin, EMLE	V_{IH}	VCC × 0.9	—	VCC+0.3	V	
	EXTAL, RSPI, ETHERC EXDMAC, WAIT#, TCK		VCC × 0.8	—	VCC+0.3		
	XCIN		VCC × 0.8	—	VCC+0.3		
	D0 to D31		VCC × 0.7	—	VCC+0.3		
	RIIC (SMBus)		2.1	—	VCC+0.3		
Input low voltage (except Schmitt trigger input pin)	MD pin, EMLE	V_{IL}	-0.3	—	VCC × 0.1	V	
	EXTAL, RSPI, ETHERC EXDMAC, WAIT#, TCK		-0.3	—	VCC × 0.2		
	XCIN		-0.3	—	VCC×0.2		
	D0 to D31		-0.3	—	VCC×0.3		
	RIIC (SMBus)		-0.3	—	0.8		

Table 5.3 DC Characteristics (2)

Conditions: VCC = PLLVCC = AVCC = VCC_USB = 2.7 to 3.6 V, VREFH = 2.7 V to AVCC
VSS = PLLVSS = AVSS = VREFL = VSS_USB = 0 V
T_a = -40 to +85°C

Item		Symbol	Min.	Typ.	Max.	Unit	Test Conditions
Output high voltage	All output pins	V_{OH}	VCC-0.5	—	—	V	I_{OH} = -1 mA
Output low voltage	All output pins (except for RIIC pins)	V_{OL}	—	—	0.5	V	I_{OL} = 1.0 mA
	RIIC pins		—	—	0.4	V	I_{OL} = 3.0 mA
			—	—	0.6		I_{OL} = 6.0 mA
	RIIC pins (only P12 and P13 in channel 0)	V_{OL}	—	—	0.4	V	I_{OL} = 15.0 mA (ICFER.FMPE = 1)
			—	0.4	—		I_{OL} = 20.0 mA (ICFER.FMPE = 1)
Input leakage current	RES#, MD pin, EMLE, NMI	$\lvert I_{in} \rvert$	—	—	1.0	µA	V_{in} = 0 V V_{in} = VCC
Three-state leakage current (off state)	Ports 03, 05, 10, 11, 14, 15 ports 22 to 27 ports 30 to 32, 34, 35 ports 4 to G	$\lvert I_{TSI} \rvert$	—	—	1.0	µA	V_{in} = 0 V V_{in} = VCC
	Ports 00 to 02, 07, 12, 13 Ports 16, 17, 20, 21, 33		—	—	5.0		
Input pull-up MOS current	Ports 9 to E, G	$-I_p$	10	—	300	µA	VCC = 2.7 to 3.6 V V_{in} = 0 V
Input capacitance	All input pins (except for ports 12, 13, 20, 21 ports 40 to 47, and EMLE)	C_{in}	—	—	15	pF	V_{in} = 0 V f = 1 MHz T_a = 25°C
	Ports 12, 13, 20, 21, Ports 40 to 47, EMLE		—	—	30		

Table 5.4 DC Characteristics (3)

Conditions: VCC = PLLVCC = AVCC = VCC_USB = 2.7 to 3.6 V, VREFH = 2.7 V to AVCC
VSS = PLLVSS = AVSS = VREFL = VSS_USB = 0 V
T_a = -40 to +85°C

Item					Symbol	Min.	Typ.	Max.	Unit	Test Conditions
Supply current*2	In operation	Max.*3			I_{CC}*4	—	—	100	mA	ICLK = 100 MHz PCLK = 50 MHz BCLK = 50 MHz
		Normal operation	Peripheral function: Clocks supplied*5			—	48	—		
			Peripheral function: Clocks not supplied*5			—	35	—		
		Increased by BGO operation*6				—	15	—		
	Sleep					—	20	60		
	All-module-clock-stop mode*7					—	14	28		
	Standby mode	Software standby mode				—	0.12	3.0	mA	
		Deep software standby mode	RTC in operation	RAM, USB retained		—	30	206	µA	
				RAM, USB power supply halted		—	26	66	µA	
			RTC halted	RAM, USB retained		—	25	200	µA	
				RAM, USB power supply halted		—	21	60	µA	
Analog power supply current	During 12-bit A/D conversion (per unit)				AI_{CC}	—	2.5	3.0	mA	
	During 10-bit A/D conversion (per unit)					—	0.8	1.2	mA	
	During D/A conversion (per channel)					—	0.3	2.0	µA	
	Idle (all units)					—	30	35	µA	
	During A/D or D/A standby (all units)					—	0.1	4.0	µA	
Reference power supply current	During 12-bit A/D conversion (per unit)				AI_{CC}	—	0.5	0.7	mA	
	During 10-bit A/D conversion (per unit)					—	0.06	0.1	mA	
	During D/A conversion (per channel)					—	0.6	1.0	mA	
	Idle (all units)					—	0.4	0.6	mA	
	During A/D or D/A standby (all units)					—	0.1	2.0	µA	
RAM standby voltage					V_{RAM}	2.48	—	—	V	
VCC rising gradient					SVCC	—	—	20	ms/V	

Note 1. The V_{IH} characteristic of the pins multiplexed with 5-V tolerant ports 00 to 02, 07, 12, 13, 16, 17, 20, 21, and 33 is the same as the V_{IH} characteristic of 5-V tolerant ports.
Note 2. Supply current values are with all output pins unloaded and all input pull-up MOSs in the off state.
Note 3. Measured with clocks supplied to the peripheral functions. This does not include the BGO operation.
Note 4. ICC depends on f (ICLK) as follows. (ICLK: PCLK: BCLK: BCLK pin = 8 : 4: 8: 4)
ICC max. = 0.89 x f + 11 (max.)
ICC typ. = 0.43 x f + 5 (normal operation, peripheral function: clocks supplied)
ICC typ. = 0.30 x f + 5 (normal operation, peripheral function: clocks not supplied)
ICC max. = 0.48 x f + 12 (sleep mode)
Note 5. This does not include the BGO operation.
Note 6. Incremented if data is written to or erased from the ROM or data flash for data storage during the program execution.
Note 7. The values are for reference.

Table 5.5 Permissible Output Currents

Conditions: VCC = PLLVCC = AVCC = VCC_USB = 2.7 to 3.6 V, VREFH = 2.7 V to AVCC
VSS = PLLVSS = AVSS = VREFL = VSS_USB = 0 V
T_a = -40 to +85°C

Item		Symbol	Min.	Typ.	Max.	Unit
Permissible output low current (average value per pin)	All output pins except for RIIC pins	I_{OL}	—	—	2.0	mA
	RIIC pins (ICFER.FMPE = 0)	I_{OL}	—	—	6.0	mA
	RIIC pins (ICFER.FMPE = 1)	I_{OL}	—	—	20.0	mA
Permissible output low current (max. value per pin)	All output pins except for RIIC pins	I_{OL}	—	—	4.0	mA
	RIIC pins (ICFER.FMPE = 0)	I_{OL}	—	—	6.0	mA
	RIIC pins (ICFER.FMPE = 1)	I_{OL}	—	—	20.0	mA
Permissible output low current (total)	Total of all output pins	ΣI_{OL}	—	—	80	mA
Permissible output high current (average value per pin)	All output pins (except for USB_DPUPE pin)	$-I_{OH}$	—	—	2.0	mA
	USB_DPUPE pin	$-I_{OH}$	—	—	3.0	mA
Permissible output high current (max. value per pin)	All output pins	$-I_{OH}$	—	—	4.0	mA
Permissible output high current (total)	Total of all output pins	$\Sigma -I_{OH}$	—	—	80	mA

Caution: To protect the LSI's reliability, the output current values should not exceed the permissible output current.

5.3 AC Characteristics

Table 5.6 Operation Frequency Value [176-pin LFBGA/145-pin TFLGA/144-pin LQFP]

Conditions: VCC = PLLVCC = AVCC = VCC_USB = 2.7 to 3.6 V, VREFH = 2.7 V to AVCC
VSS = PLLVSS = AVSS = VREFL = VSS_USB = 0 V
ICLK = 8 to 100 MHz, PCLK = 8 to 50 MHz, BCLK = 8 to 100 MHz, SDCLK = 8 to 50 MHz
T_a = -40 to +85°C

Item		Symbol	Min.	Typ.	Max.	Unit
Operation frequency	System clock (ICLK)	f	8*1	—	100	MHz
	Peripheral module clock (PCLK)		8*2	—	50	
	External bus clock (BCLK)		8	—	100	
	BCLK pin output		8	—	50	
	SDRAM clock (SDCLK)		8	—	50	
	SDCLK pin output		8	—	50	

Note 1. The ICLK must run at a frequency of at least 12.5 MHz if the Ethernet controller is in use.
Note 2. The PCLK must run at a frequency of at least 24 MHz if the USB is in use.

Table 5.7 Operation Frequency Value [100-pin LQFP/85-pin TFLGA]

Conditions: VCC = PLLVCC = AVCC = VCC_USB = 2.7 to 3.6 V, VREFH = 2.7 V to AVCC
VSS = PLLVSS = AVSS = VREFL = VSS_USB = 0 V
ICLK = 8 to 100 MHz, PCLK = 8 to 50 MHz, BCLK = 8 to 50 MHz
T_a = -40 to +85°C

Item		Symbol	Min.	Typ.	Max.	Unit
Operation frequency	System clock (ICLK)	f	8*1	—	100	MHz
	Peripheral module clock (PCLK)		8*2	—	50	
	External bus clock (BCLK)		8	—	50	
	BCLK pin output		8	—	25	

Note 1. The ICLK must run at a frequency of at least 12.5 MHz if the Ethernet controller is in use.
Note 2. The PCLK must run at a frequency of at least 24 MHz if the USB is in use.

5.3.1 Clock Timing

Table 5.8 Clock Timing

Conditions: VCC = PLLVCC = AVCC = VCC_USB = 2.7 to 3.6 V, VREFH = 2.7 V to AVCC
VSS = PLLVSS = AVSS = VREFL = VSS_USB = 0 V
T_a = -40 to +85°C

Item	Symbol	Min.	Max.	Unit	Test Conditions
BCLK pin output cycle time [176-pin LFBGA/145-pin TFLGA/144-pin LQFP]	t_{Bcyc}	20	125	ns	Figure 5.1
BCLK pin output cycle time [100-pin LQFP/85-pin TFLGA]	t_{Bcyc}	40	125	ns	
BCLK pin output high pulse width	t_{CH}	5	—	ns	
BCLK pin output low pulse width	t_{CL}	5	—	ns	
BCLK pin output rising time	t_{Cr}	—	5	ns	
BCLK pin output falling time	t_{Cf}	—	5	ns	
SDCLK pin output cycle time	t_{SDcyc}	20	125	ns	
SDCLK pin output high pulse width	t_{CH}	5	—	ns	
SDCLK pin output low pulse width	t_{CL}	5	—	ns	
SDCLK pin output rising time	t_{Cr}	—	5	ns	
SDCLK pin output falling time	t_{Cf}	—	5	ns	
Oscillation settling time after reset (crystal)	t_{OSC1}	10	—	ms	Figure 5.2
Oscillation settling time after leaving software standby mode (crystal)	t_{OSC2}	10	—	ms	Figure 5.3
Oscillation settling time after leaving deep software standby mode (crystal)	t_{OSC3}	10	—	ms	Figure 5.4
EXTAL external clock output delay settling time	t_{DEXT}	1	—	ms	Figure 5.2
EXTAL external clock input low pulse width	t_{EXL}	30.71	—	ns	Figure 5.5
EXTAL external clock input high pulse width	t_{EXH}	30.71	—	ns	
EXTAL external clock rising time	t_{EXr}	—	5	ns	
EXTAL external clock falling time	t_{EXf}	—	5	ns	
XCIN sub-clock oscillation settling time	t_{SUBOSC}	2	—	s	Figure 5.6
XCIN sub-clock oscillation frequency	f_{SUB}	32.768	—	kHz	
On-chip oscillator (IWDTCLK) oscillation frequency	$f_{IWDTCLK}$	62.5	187.5	kHz	

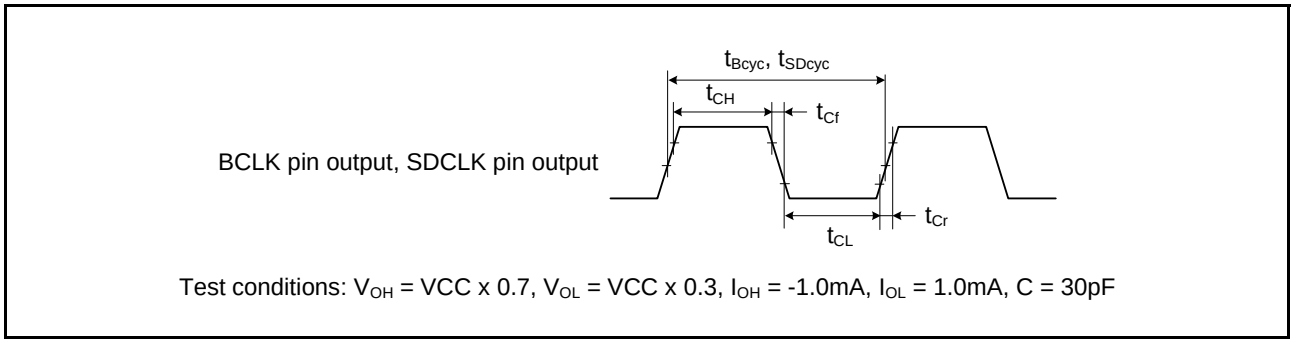

Figure 5.1 BCLK Pin Output, SDCLK Pin Output Timing

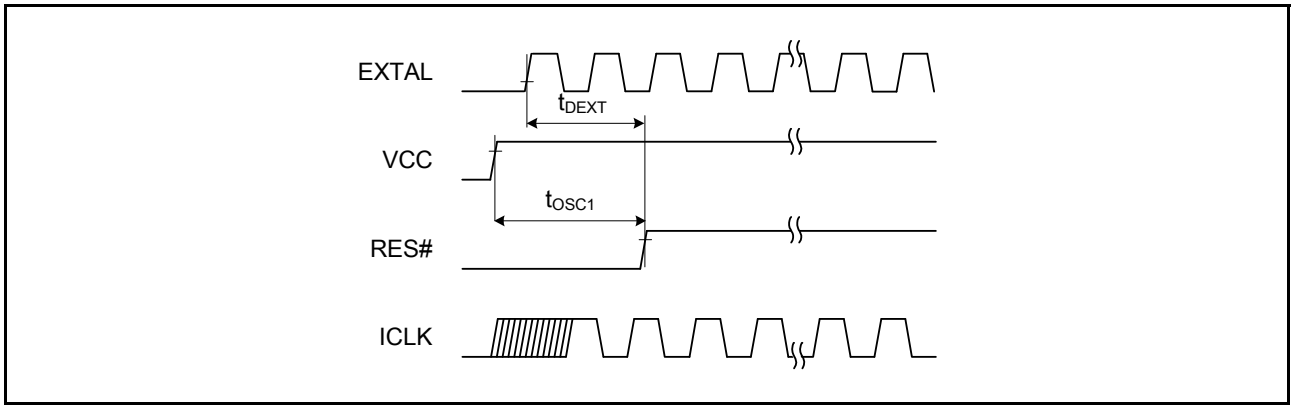

Figure 5.2 Oscillation Settling Timing

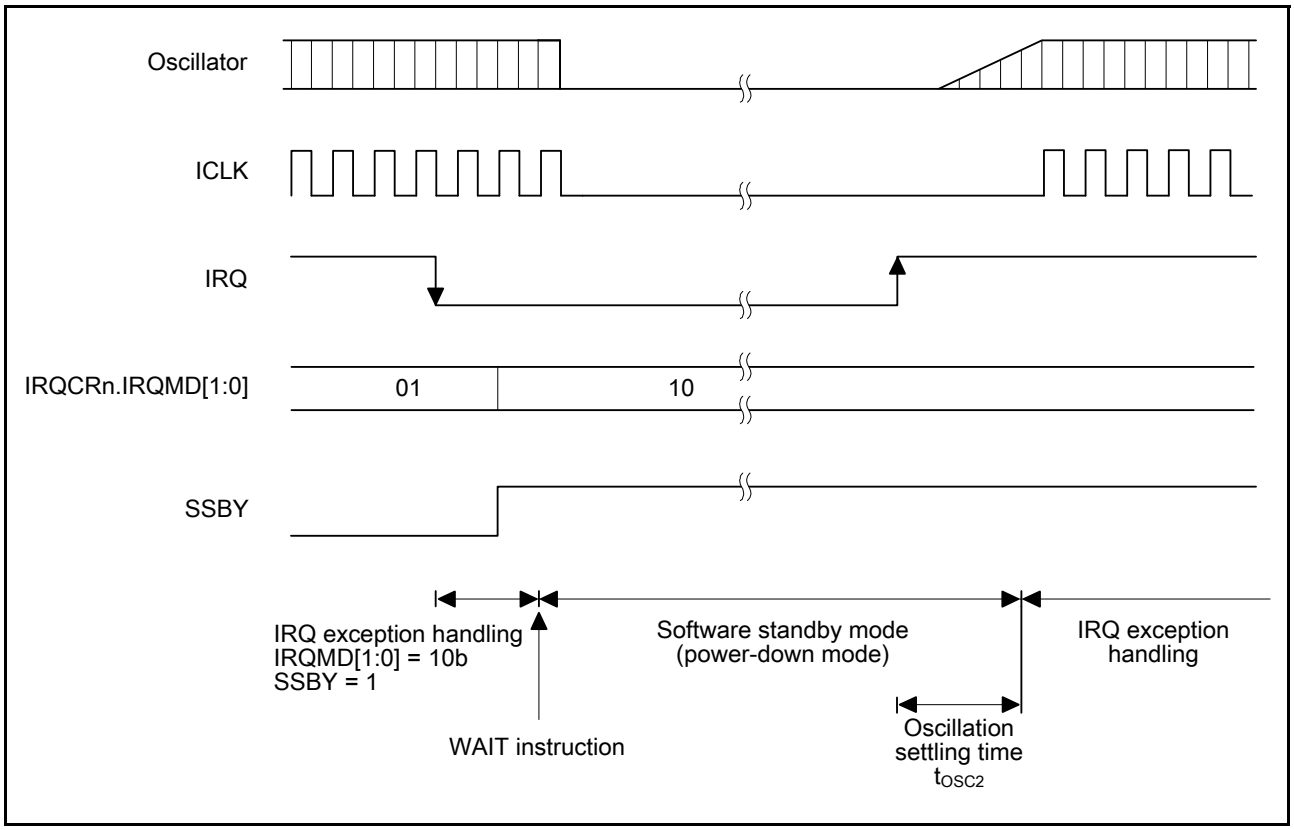

Figure 5.3 Oscillation Settling Timing after Software Standby Mode

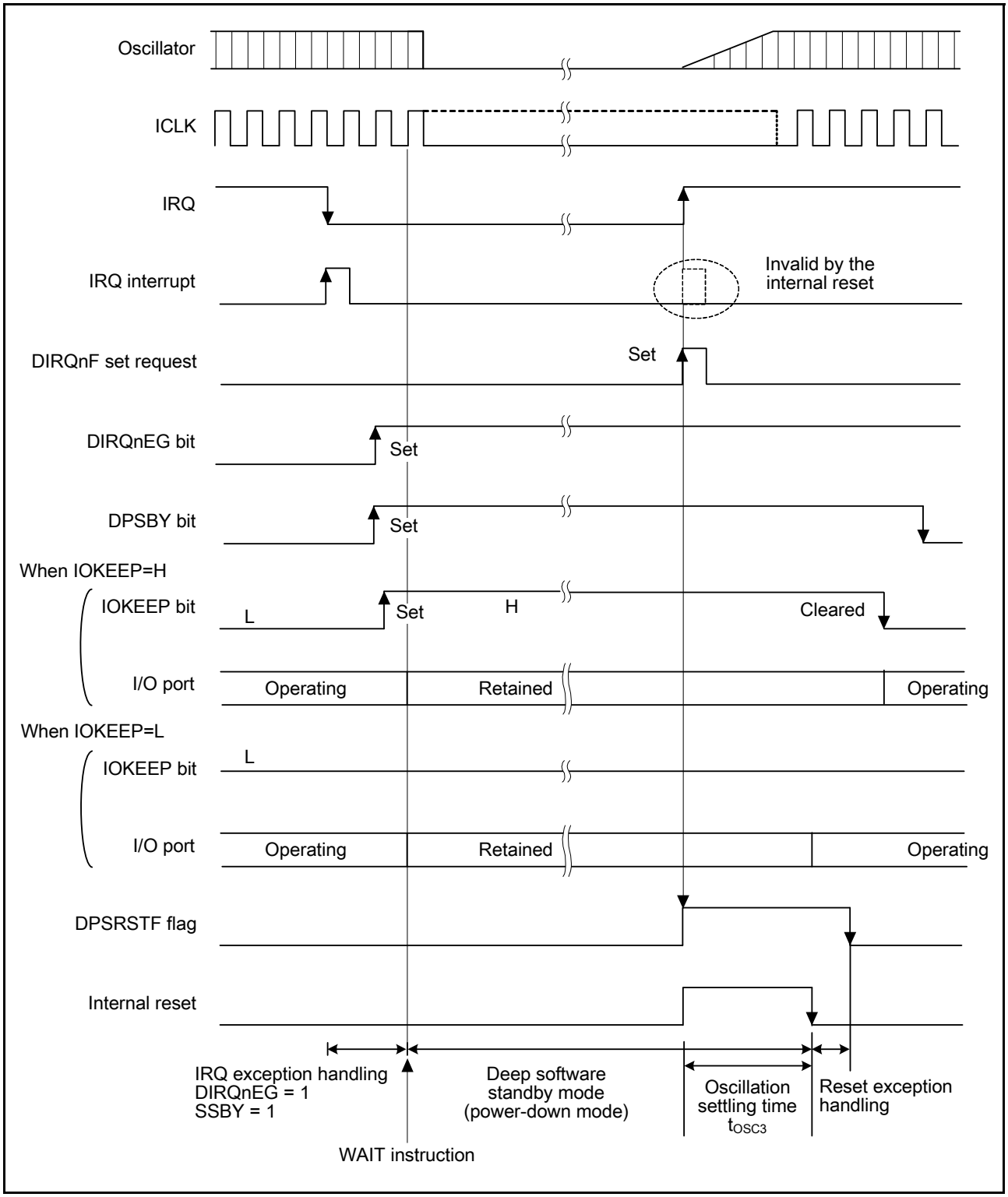

Figure 5.4 Oscillation Settling Timing after Deep Software Standby Mode

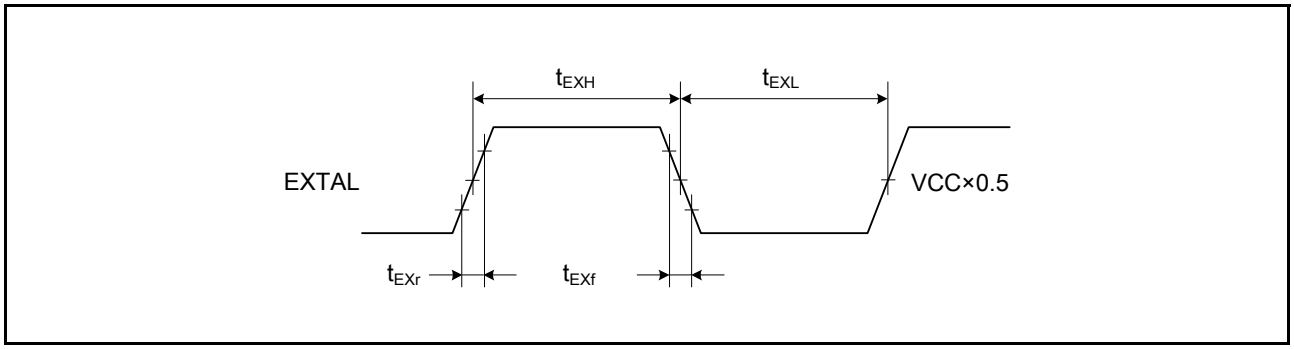

Figure 5.5 EXTAL External Input Clock Timing

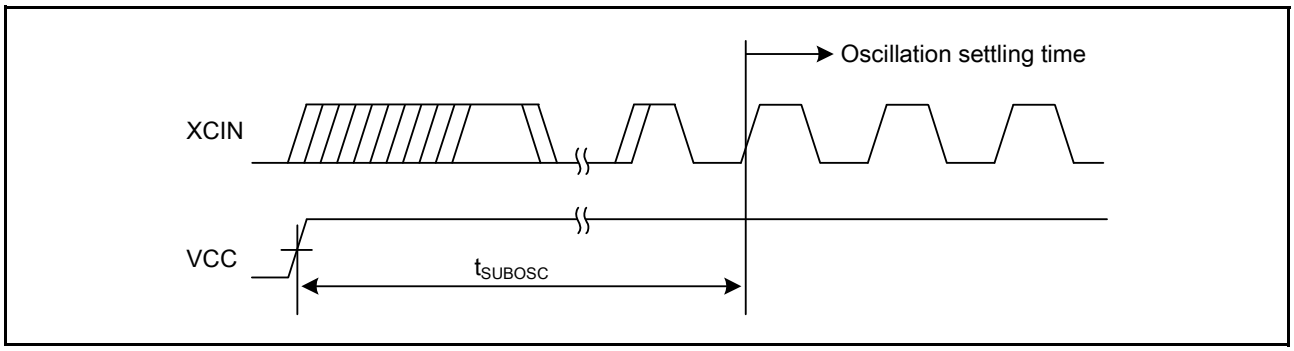

Figure 5.6 XCIN Sub-Clock Oscillation Settling Time

5.3.2 Control Signal Timing

Table 5.9 Control Signal Timing

Conditions: VCC = PLLVCC = AVCC = VCC_USB = 2.7 to 3.6 V, VREFH = 2.7 V to AVCC
VSS = PLLVSS = AVSS = VREFL = VSS_USB = 0 V
T_a = -40 to +85°C

Item	Symbol	Min.	Max.	Unit	Test Conditions
RES# pulse width (except for programming or erasure of the ROM or data-flash memory or blank checking of the data-flash memory)	t_{RESW} *1	20	—	t_{Icyc} *3	Figure 5.7
		1.5	—	μs	
Internal reset time*2	t_{RESW2}	35	—	μs	
NMI pulse width	t_{NMIW}	200	—	ns	Figure 5.8
IRQ pulse width	t_{IRQW}	200	—	ns	Figure 5.9

Note 1. Both the time and the number of cycles should satisfy the specifications.
Note 2. This is to specify the FCU reset.
Note 3. t_{Icyc}: ICLK cycles

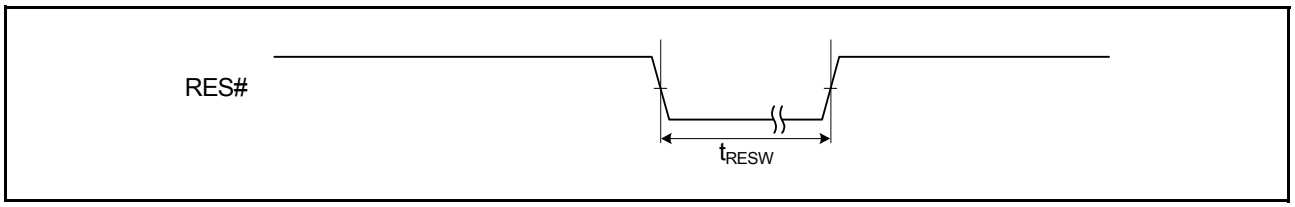

Figure 5.7 Reset Input Timing

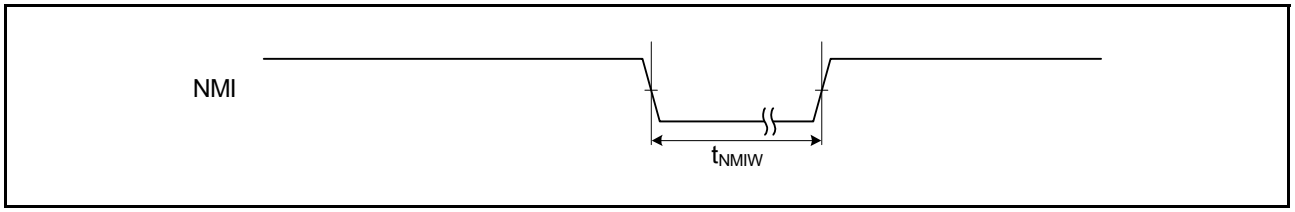

Figure 5.8 NMI Interrupt Input Timing

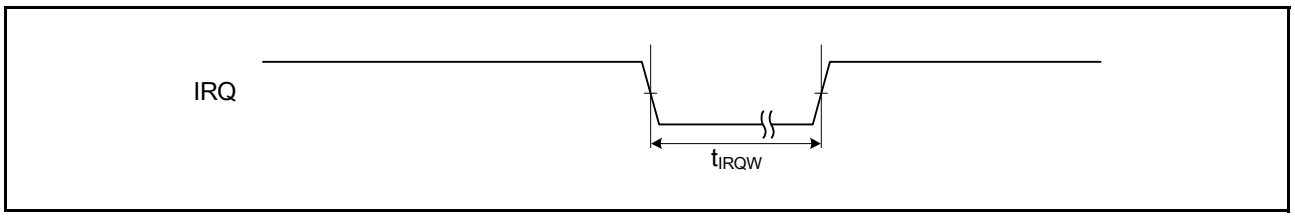

Figure 5.9 IRQ Interrupt Input Timing

5.3.3 Bus Timing

Table 5.10 Bus Timing [176-pin LFBGA/145-pin TFLGA/144-pin LQFP]

Conditions: VCC = PLLVCC = AVCC = VCC_USB = 2.7 to 3.6 V, VREFH = 2.7 V to AVCC
VSS = PLLVSS = AVSS = VREFL = VSS_USB = 0 V
ICLK = 8 to 100 MHz, BCLK = 8 to 100 MHz, SDCLK = 8 to 50 MHz
T_a = -40 to +85°C
Output load conditions: V_{OH} = VCC×0.5, V_{OL} = VCC×0.5, I_{OH} = -1.0 mA, I_{OL} = 1.0 mA, C = 30 pF

Item	Symbol	Min.	Max.	Unit	Test Conditions
Address delay time	t_{AD}	—	15	ns	Figure 5.10 to Figure 5.13
Byte control delay time	t_{BCD}	—	15	ns	
CS# delay time	t_{CSD}	—	15	ns	
RD# delay time	t_{RSD}	—	15	ns	
Read data setup time	t_{RDS}	15	—	ns	
Read data hold time	t_{RDH}	0.0	—	ns	
WR# delay time	t_{WRD}	—	15	ns	
Write data delay time	t_{WDD}	—	15	ns	
Write data hold time	t_{WDH}	0	—	ns	
WAIT# setup time	t_{WTS}	15	—	ns	Figure 5.14
WAIT# hold time	t_{WTH}	0.0	—	ns	
Address delay time 2 (SDRAM)	t_{AD2}	1	15	ns	Figure 5.22 to Figure 5.28
CS# delay time 2 (SDRAM)	t_{CSD2}	1	15	ns	
DQM delay time (SDRAM)	t_{DQMD}	1	15	ns	
CKE delay time (SDRAM)	t_{CKED}	1	15	ns	
Read data setup time 2 (SDRAM)	t_{RDS2}	12	—	ns	
Read data hold time 2 (SDRAM)	t_{RDH2}	0	—	ns	
Write data delay time 2 (SDRAM)	t_{WDD2}	—	15	ns	
Write data hold time 2 (SDRAM)	t_{WDH2}	1	—	ns	
WE# delay time (SDRAM)	t_{WED}	1	15	ns	
RAS# delay time (SDRAM)	t_{RASD}	1	15	ns	
CAS# delay time (SDRAM)	t_{CASD}	1	15	ns	

Table 5.11 Bus Timing [100-pin LQFP/85-pin TFLGA]

Conditions: VCC = PLLVCC = AVCC = VCC_USB = 2.7 to 3.6 V, VREFH = 2.7 V to AVCC
VSS = PLLVSS = AVSS = VREFL = VSS_USB = 0 V
ICLK = 8 to 100 MHz, PCLK = 8 to 50 MHz, BCLK = 8 to 50 MHz
T_a = -40 to +85°C
Output load conditions: V_{OH} = VCC × 0.5, V_{OL} = VCC × 0.5, I_{OH} = -1.0 mA, I_{OL} = 1.0 mA, C = 30 pF

Item	Symbol	Min.	Max.	Unit	Test Conditions
Address delay time	t_{AD}	—	30	ns	Figure 5.10 to Figure 5.13
Byte control delay time	t_{BCD}	—	30	ns	
CS# delay time	t_{CSD}	—	30	ns	
RD# delay time	t_{RSD}	—	30	ns	
Read data setup time	t_{RDS}	15	—	ns	
Read data hold time	t_{RDH}	0.0	—	ns	
WR# delay time	t_{WRD}	—	30	ns	
Write data delay time	t_{WDD}	—	35	ns	
Write data hold time	t_{WDH}	0	—	ns	
WAIT# setup time	t_{WTS}	15	—	ns	Figure 5.14
WAIT# hold time	t_{WTH}	0.0	—	ns	

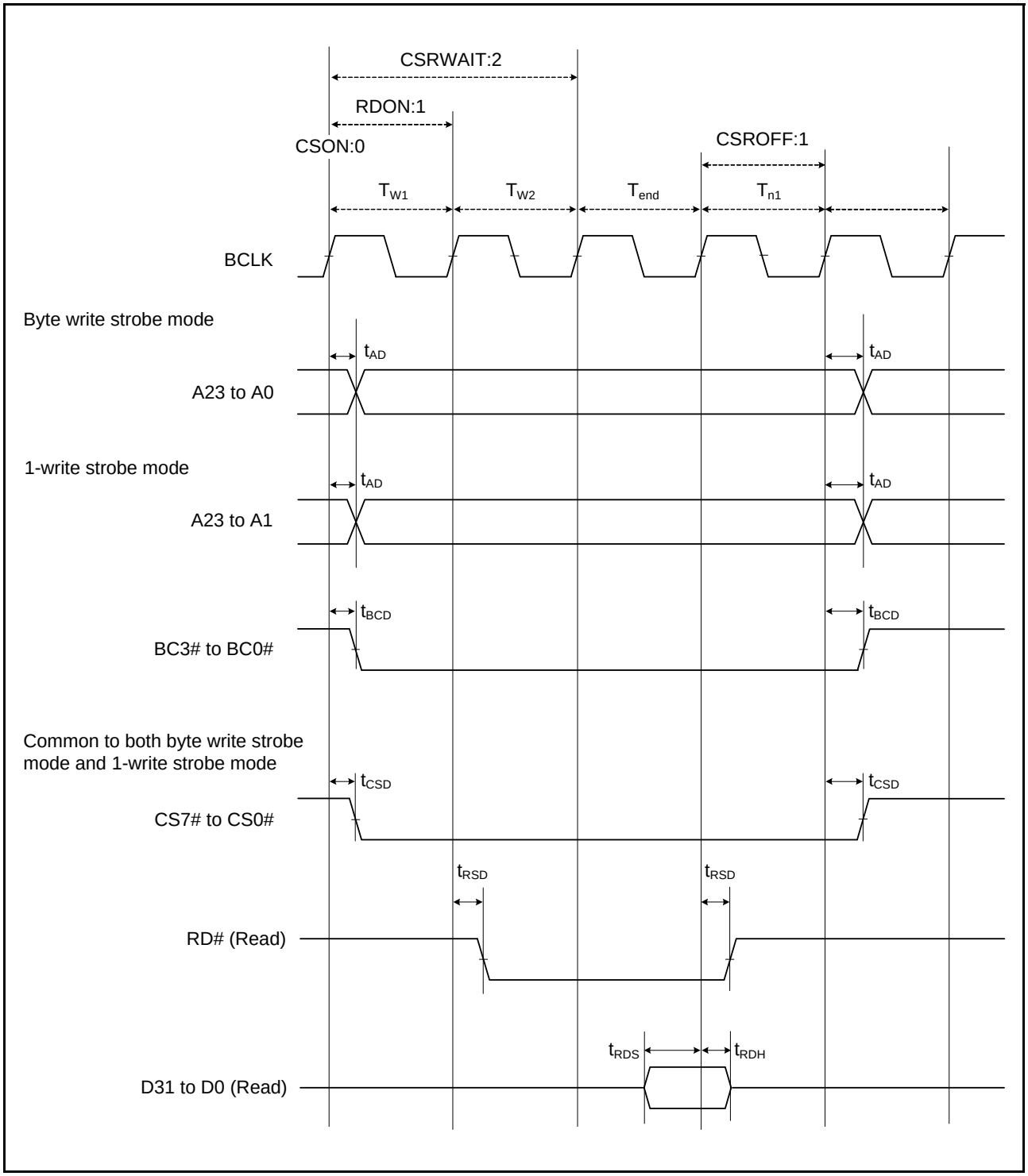

Figure 5.10 External Bus Timing/Normal Read Cycle (Bus Clock Synchronized)

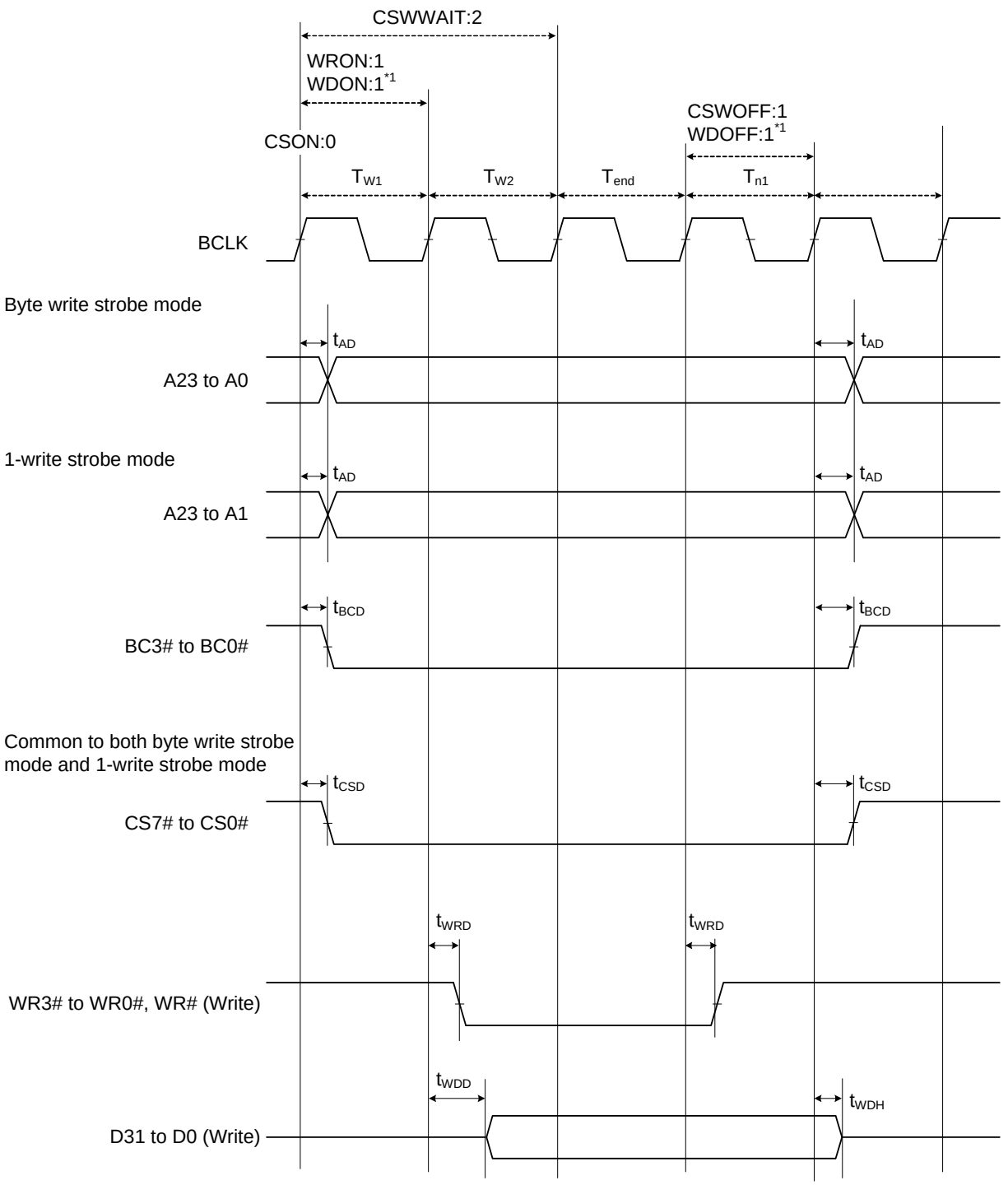

Note1: Be sure to specify WDON and WDOFF as at least one cycle of BCLK.

Figure 5.11 External Bus Timing/Normal Write Cycle (Bus Clock Synchronized)

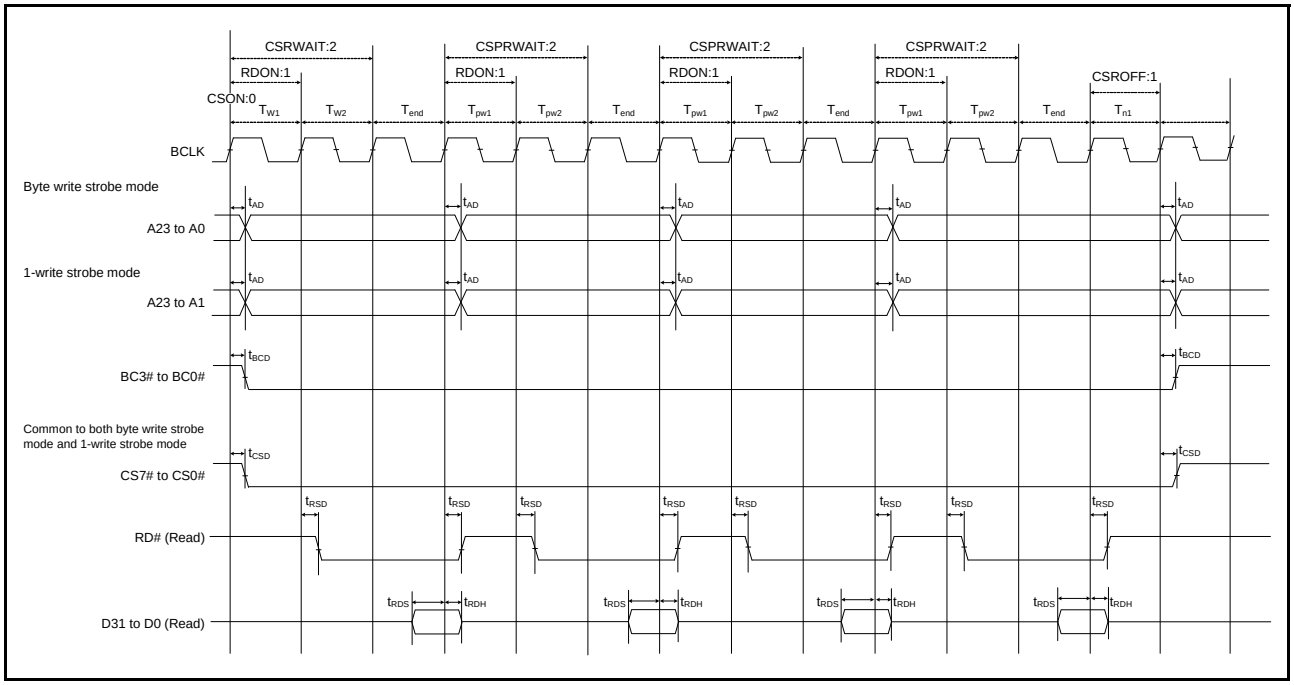

Figure 5.12 External Bus Timing/Page Read Cycle (Bus Clock Synchronized)

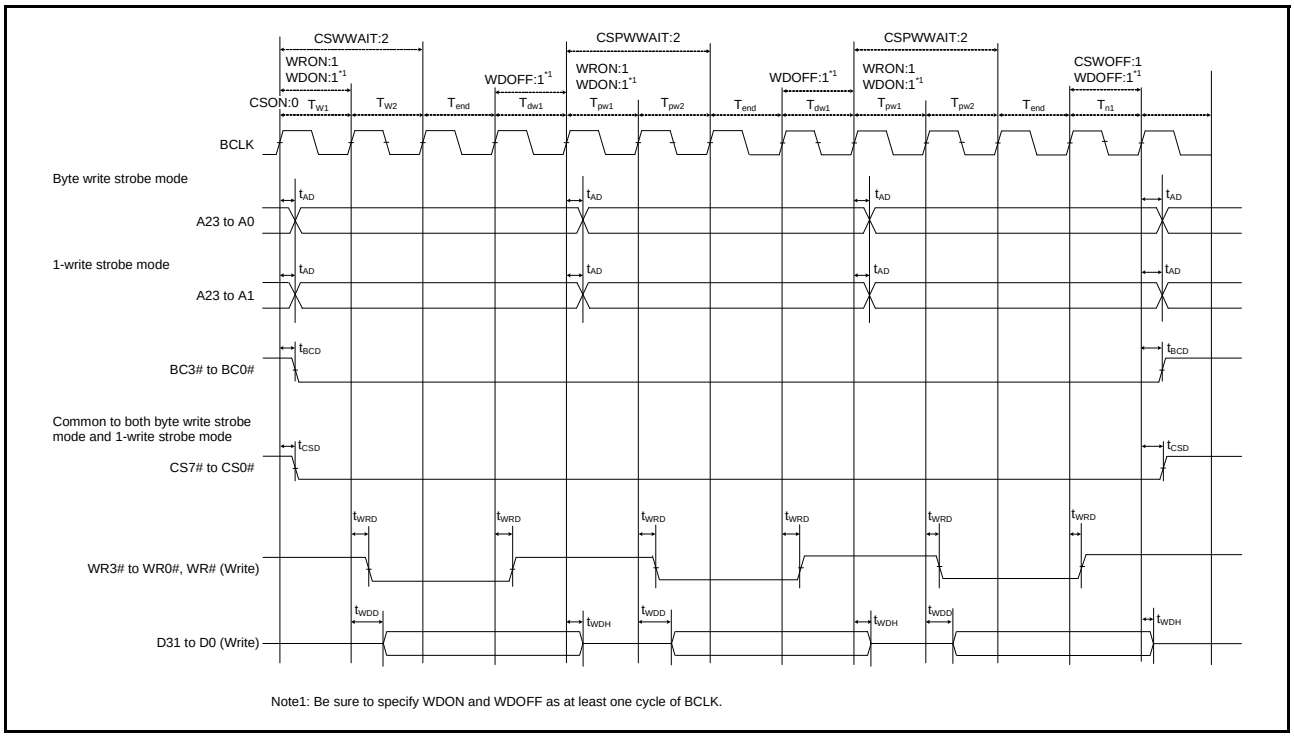

Figure 5.13 External Bus Timing/Page Write Cycle (Bus Clock Synchronized)

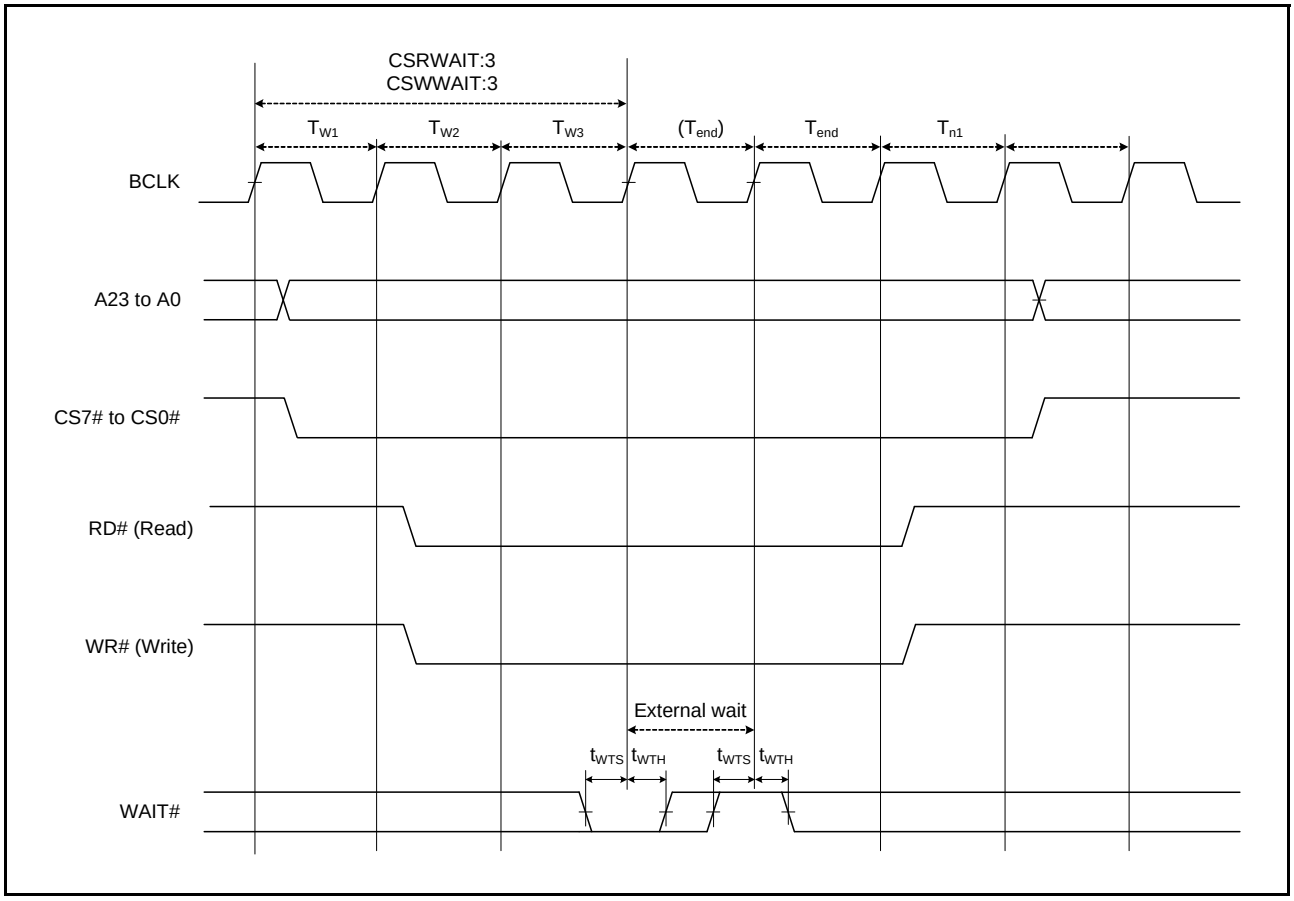

Figure 5.14 External Bus Timing/External Wait Control

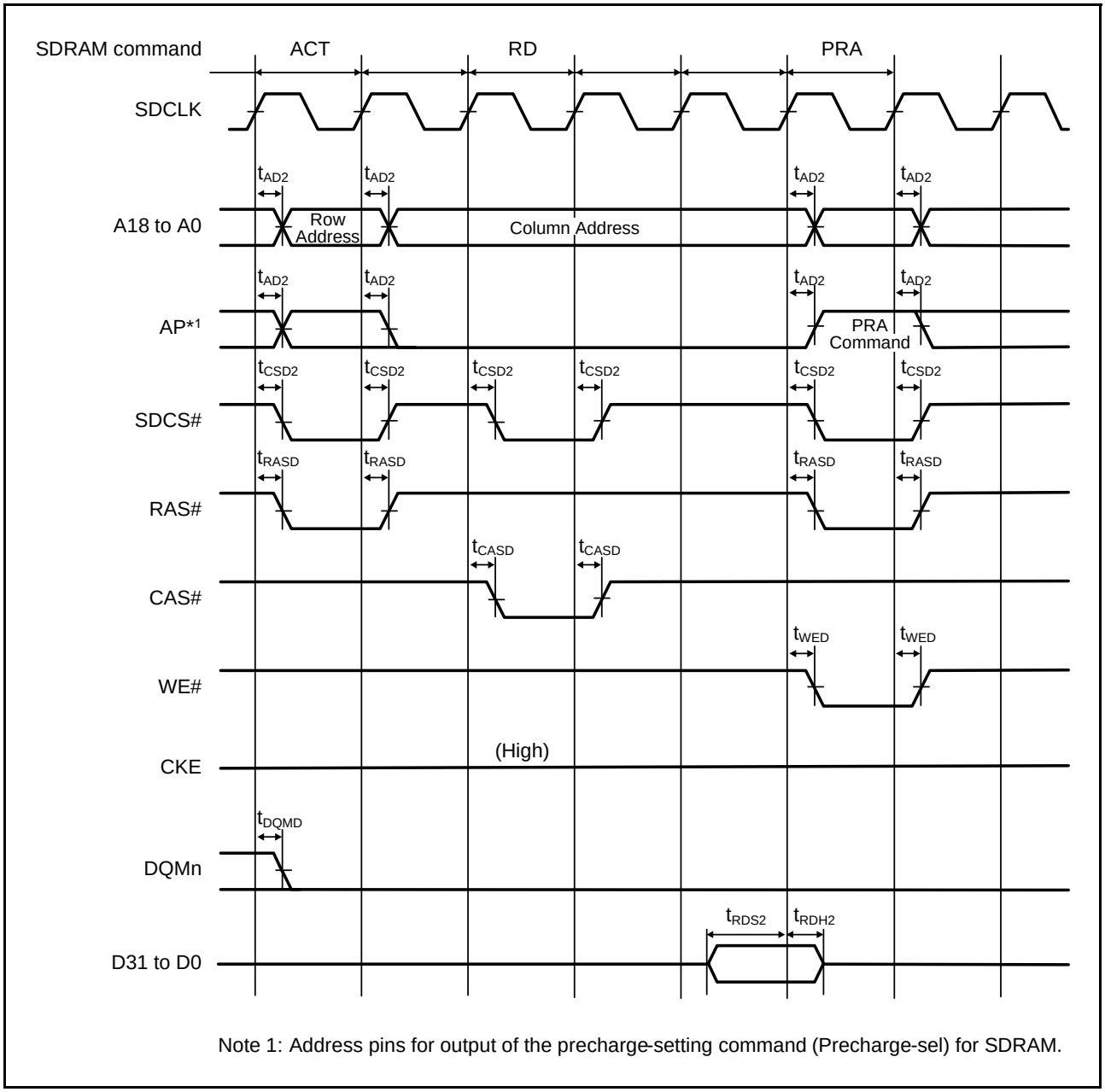

Note 1: Address pins for output of the precharge-setting command (Precharge-sel) for SDRAM.

Figure 5.15 SDRAM Space Single Read Bus Timing

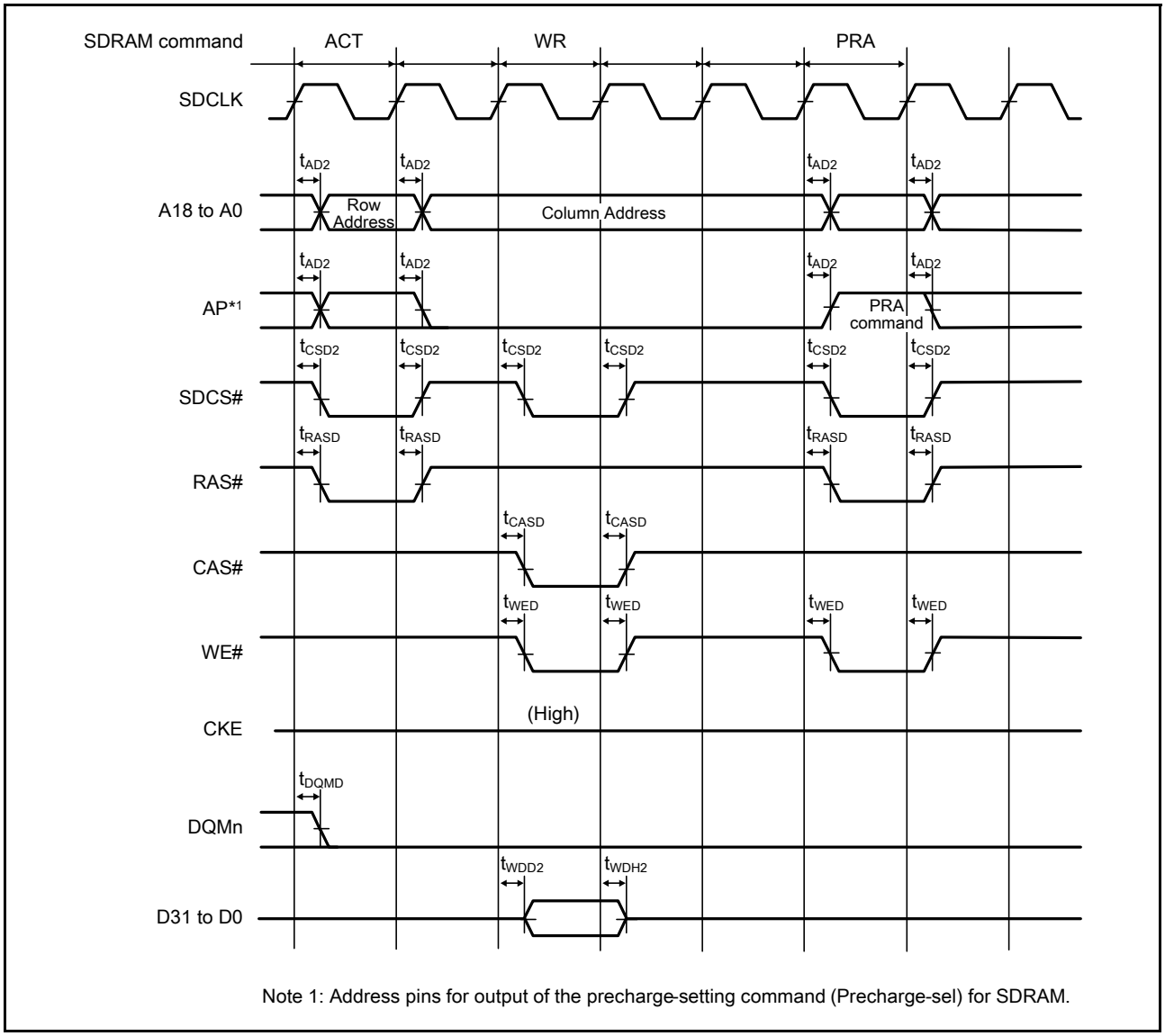

Figure 5.16 SDRAM Space Single Write Bus Timing

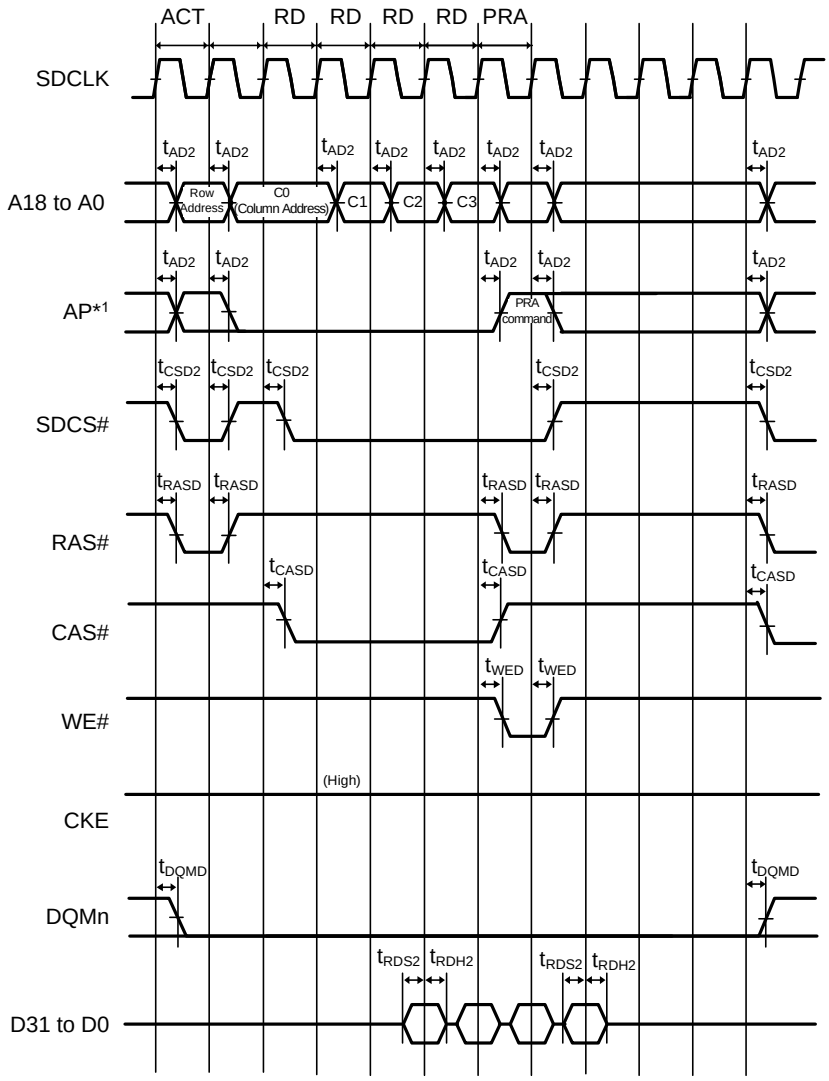

Note 1: Address pins for output of the precharge-setting command (Precharge-sel) for SDRAM.

Figure 5.17 SDRAM Space Multiple Read Bus Timing

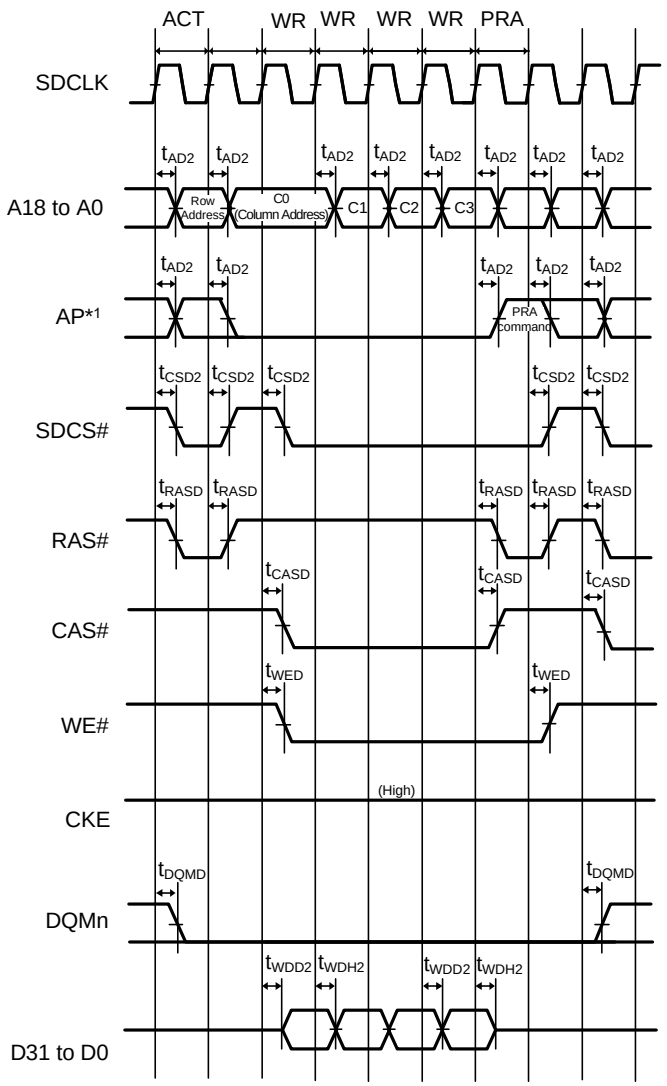

Note 1: Address pins for output of the precharge-setting command (Precharge-sel) for SDRAM.

Figure 5.18 SDRAM Space Multiple Write Bus Timing

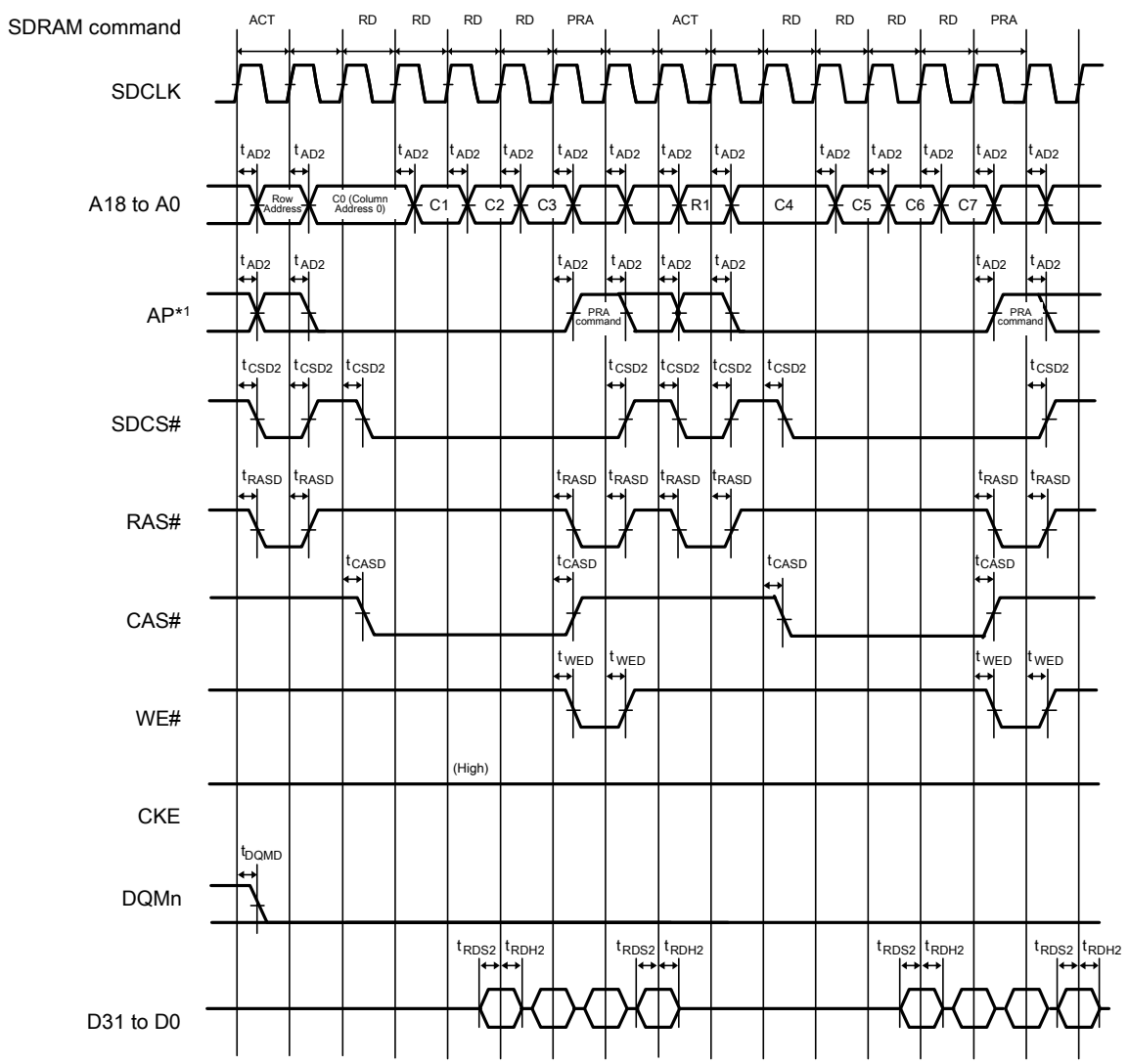

Note 1: Address pins for output of the precharge-setting command (Precharge-sel) for SDRAM.

Figure 5.19 SDRAM Space Multiple Read Line Stride Bus Timing

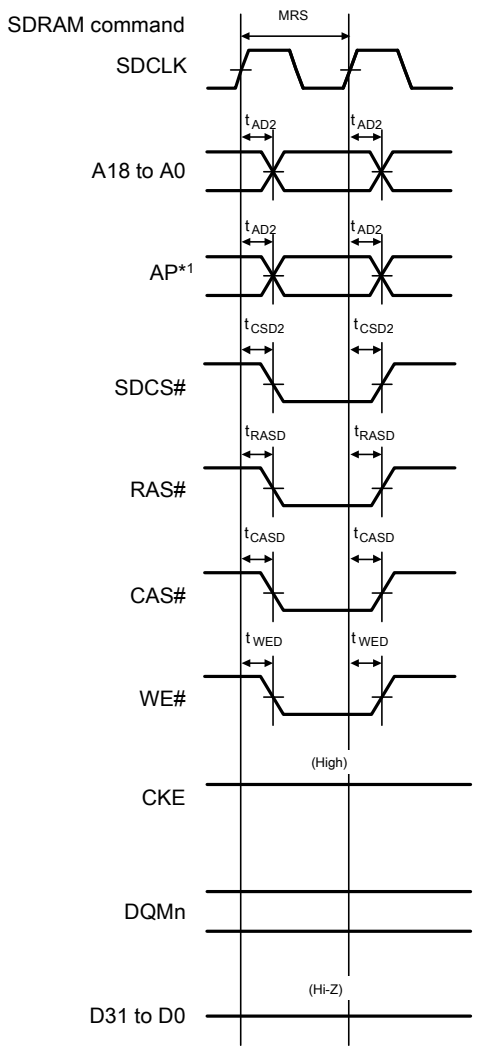

Note 1: Address pins for output of the precharge-setting command (Precharge-sel) for SDRAM.

Figure 5.20 SDRAM Space Mode Register Set Bus Timing

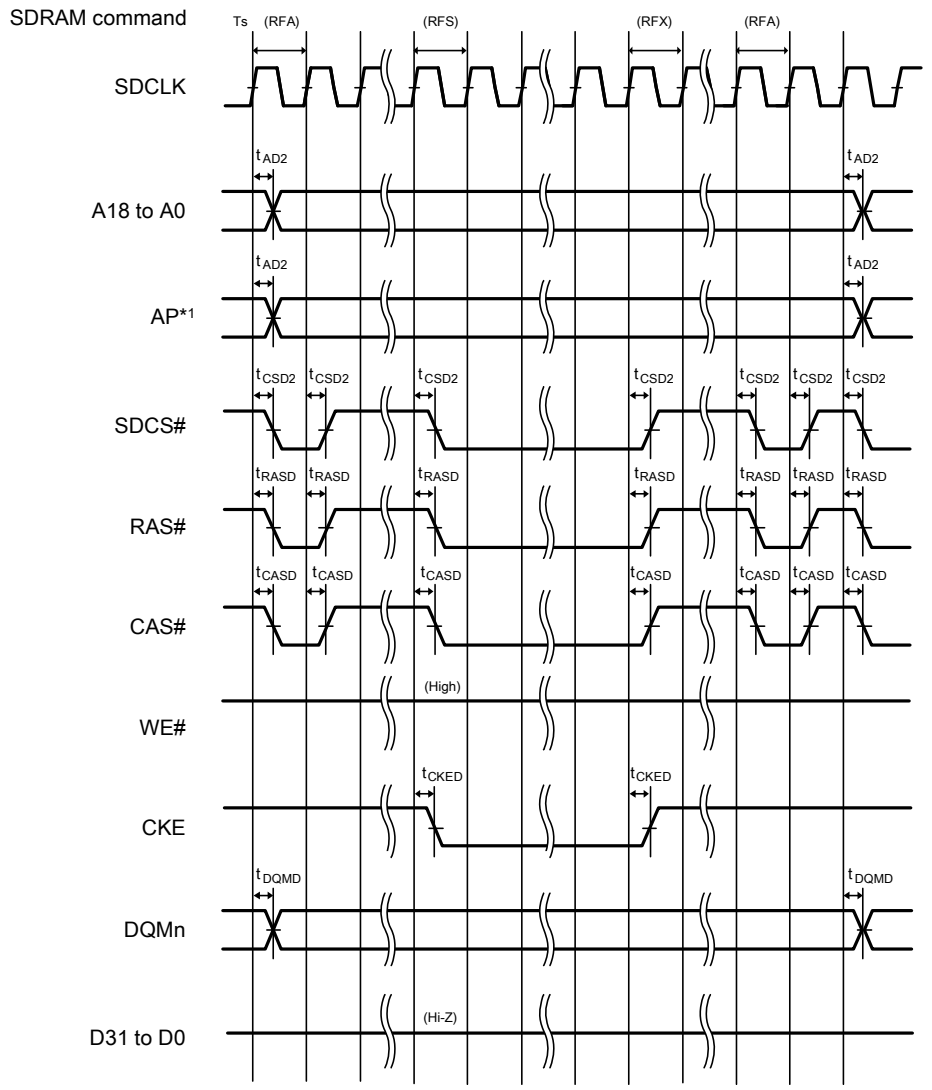

Note 1: Address pins for output of the precharge-setting command (Precharge-sel) for SDRAM.

Figure 5.21 SDRAM Space Self-Refresh Bus Timing

5.3.4 EXDMAC Timing

Table 5.12 EXDMAC Timing

Conditions: VCC = PLLVCC = AVCC = VCC_USB = 2.7 to 3.6 V, VREFH = 2.7 V to AVCC
VSS = PLLVSS = AVSS = VREFL = VSS_USB = 0 V
ICLK = 8 to 100 MHz, PCLK = 8 to 50 MHz, BCLK = 8 to 100 MHz, SDCLK = 8 to 50 MHz
T_a = -40 to +85°C

Item		Symbol	Min.	Max.	Unit	Test Conditions
EXDMAC	EDREQ setup time	t_{EDRQS}	20	—	ns	Figure 5.22
	EDREQ hold time	t_{EDRQH}	5	—	ns	
	EDACK delay time	t_{EDACD}	—	15	ns	Figure 5.23 and Figure 5.24

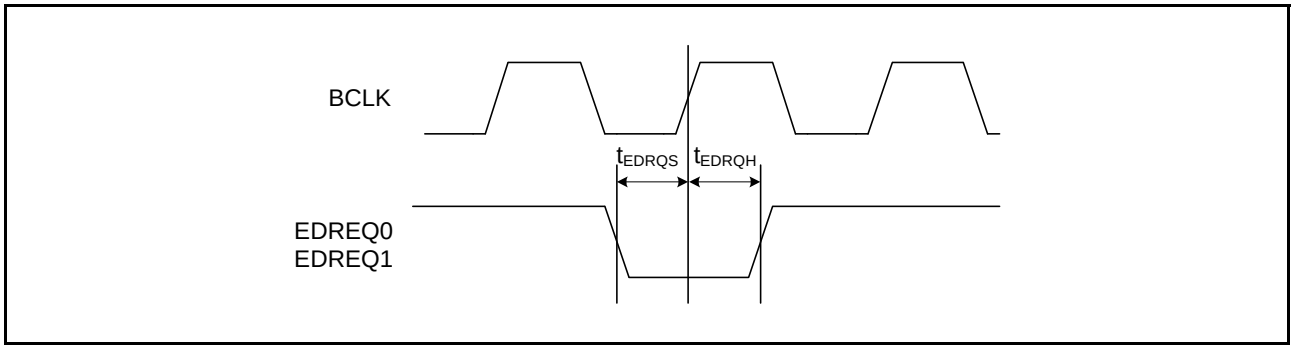

Figure 5.22 EDREQ0 and EDREQ1 Input Timing

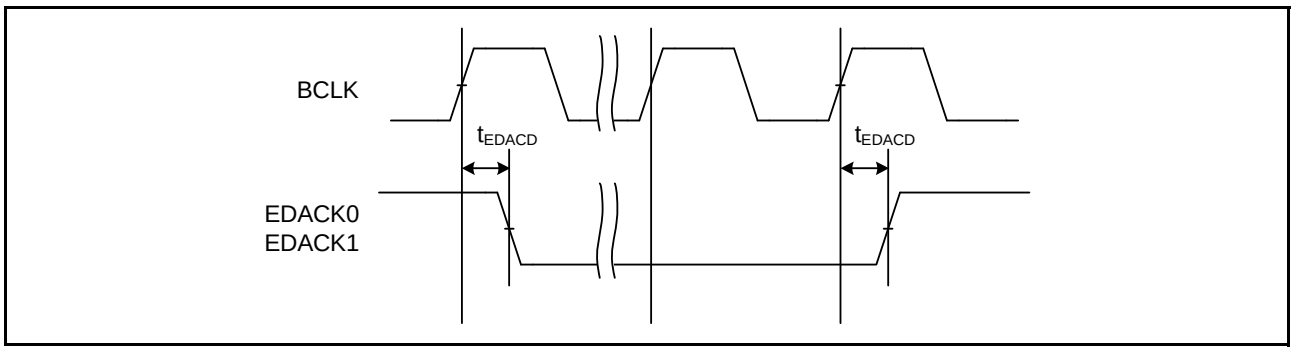

Figure 5.23 EDACK0 and EDACK1 Single-Address Transfer Timing (for a CS Area)

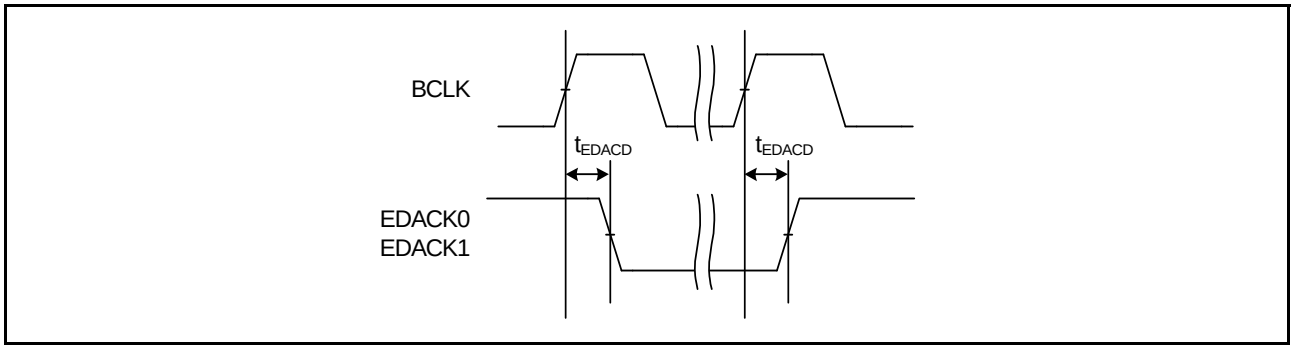

Figure 5.24 EDACK0 and EDACK1 Single-Address Transfer Timing (for SDRAM)

5.3.5 Timing of On-Chip Peripheral Modules

Table 5.13 Timing of On-Chip Peripheral Modules (1)

Conditions: VCC = PLLVCC = AVCC = VCC_USB = 2.7 to 3.6 V, VREFH = 2.7 V to AVCC
VSS = PLLVSS = AVSS = VREFL = VSS_USB = 0 V
PCLK = 8 to 50 MHz
T_a = -40 to +85°C

Item			Symbol	Min.	Max.	Unit	Test Conditions
I/O ports	Output data delay time		t_{PWD}	—	40	ns	Figure 5.25
	Input data setup time		t_{PRS}	25	—	ns	
	Input data hold time		t_{PRH}	25	—	ns	
MTU2	Output compare output delay time		t_{TOCD}	—	40	ns	Figure 5.26
	Input capture input setup time		t_{TICS}	20	—	ns	
	Input capture input pulse width (single-edge setting)		t_{TICW}	1.5 × t_{Pcyc}	—	ns	
	Input capture input pulse width (both-edge setting)		t_{TICW}	2.5 × t_{Pcyc}	—	ns	
	Timer input setup time		t_{TCKS}	20	—	ns	Figure 5.27
	Timer clock pulse width (single-edge setting)		$t_{TCKWH/L}$	1.5 × t_{Pcyc}	—	ns	
	Timer clock pulse width (both-edge setting)		$t_{TCKWH/L}$	2.5 × t_{Pcyc}	—	ns	
	Timer clock pulse width (phase counting mode)		$t_{TCKWH/L}$	2.5 × t_{Pcyc}	—	ns	
POE2	POE# input setup time		t_{POES}	50	—	ns	Figure 5.28
	POE# input pulse width		t_{POEW}	1.5 × t_{Pcyc}	—	ns	
PPG	Pulse output delay time		t_{POD}	—	40	ns	Figure 5.29
8-bit timer	Timer output delay time		t_{TMOD}	—	40	ns	Figure 5.30
	Timer reset input setup time		t_{TMRS}	25	—	ns	Figure 5.31
	Timer clock input setup time		t_{TMCS}	25	—	ns	Figure 5.32
	Timer clock pulse width	Single-edge setting	t_{TMCWH}	1.5 × t_{Pcyc}	—	ns	
		Both-edge setting	t_{TMCWL}	2.5 × t_{Pcyc}	—	ns	
WDT	Overflow output delay time		t_{WOVD}	—	40	ns	Figure 5.33

Table 5.13 Timing of On-Chip Peripheral Modules (2)

Conditions: VCC = PLLVCC = AVCC = VCC_USB = 2.7 to 3.6 V, VREFH = 2.7 V to AVCC
VSS = PLLVSS = AVSS = VREFL = VSS_USB = 0 V
PCLK = 8 to 50 MHz
T_a = -40 to +85°C

Item			Symbol	Min.	Max.	Unit	Test Conditions
SCI	Input clock cycle	Asynchronous	t_{Scyc}	4 × t_{Pcyc}	—	ns	Figure 5.34 and Figure 5.35
		Clock synchronous		6 × t_{Pcyc}	—		
	Input clock pulse width		t_{SCKW}	0.4 × t_{Scyc}	0.6 × t_{Scyc}	ns	
	Input clock rise time		t_{SCKr}	—	20	ns	
	Input clock fall time		t_{SCKf}	—	20	ns	
	Output clock cycle	Asynchronous	t_{Scyc}	16 × t_{Pcyc}	—	ns	
		Clock synchronous		4 × t_{Pcyc}	—		
	Output clock pulse width		t_{SCKW}	0.4 × t_{Scyc}	0.6 × t_{Scyc}	ns	
	Output clock rise time		t_{SCKr}	—	20	ns	
	Output clock fall time		t_{SCKf}	—	20	ns	
	Transmit data delay time (clock synchronous)		t_{TXD}	—	40	ns	
	Receive data setup time (clock synchronous)		t_{RXS}	40	—	ns	
	Receive data hold time (clock synchronous)		t_{RXH}	40	—	ns	
A/D converter	10-bit A/D converter trigger input setup time		t_{TRGS}	25	—	ns	Figure 5.36
	12-bit A/D converter trigger input setup time		t_{TRGS}	25	—	ns	

Table 5.14 Timing of On-Chip Peripheral Modules (3)

Conditions: VCC = PLLVCC = AVCC = VCC_USB = 2.7 to 3.6 V, VREFH = 2.7 V to AVCC
VSS = PLLVSS = AVSS = VREFL = VSS_USB = 0 V
PCLK = 8 to 50 MHz
T_a = -40 to +85°C

Item			Symbol	Min.	Max.	Unit	Test Conditions
CAN	Transmit data delay time		t_{CTXD}	—	40.0	ns	Figure 5.37
	Receive data setup time		t_{CRXS}	40.0	—	ns	
	Receive data hold time		t_{CRXH}	40.0	—	ns	
RSPI	RSPCK clock cycle	Master	t_{SPcyc}	2	4096	t_{Pcyc} *1	Figure 5.38
		Slave		8	4096		
	RSPCK clock high pulse width	Master	t_{SPCKWH}	$(t_{SPcyc}-t_{SPCKR}-t_{SPCKF}) / 2-3$	—	ns	
		Slave		$(t_{SPcyc}-t_{SPCKR}-t_{SPCKF}) / 2$	—		
	RSPCK clock low pulse width	Master	t_{SPCKWL}	$(t_{SPcyc}-t_{SPCKR}-t_{SPCKF}) / 2-3$	—	ns	
		Slave		$(t_{SPcyc}-t_{SPCKR}-t_{SPCKF}) / 2$	—		
	RSPCK clock rise/fall time	Output [176-pin LFBGA/ 145-pin TFLGA/ 144-pin LQFP]	t_{SPCKr}, t_{SPCKf}	—	5	ns	
		Output [100-pin LQFP/ 85-pin TFLGA]		—	10		
		Input		—	1	μs	

Note 1. tPcyc: PCLK cycle

Table 5.14 Timing of On-Chip Peripheral Modules (4)

Conditions: VCC = PLLVCC = AVCC = VCC_USB = 2.7 to 3.6 V, VREFH = 2.7 V to AVCC
VSS = PLLVSS = AVSS = VREFL = VSS_USB = 0 V
PCLK = 8 to 50 MHz
T_a = -40 to +85°C

Item			Symbol	Min.	Max.	Unit	Test Conditions
RSPI	Data input setup time	Master [176-pin LFBGA/ 145-pin TFLGA/ 144-pin LQFP]	t_{SU}	16	—	ns	Figure 5.39 to Figure 5.42
		Master [100-pin LQFP/ 85-pin TFLGA]		30	—		
		Slave		20-2 × t_{Pcyc}	—		
	Data input hold time	Master	t_H	0	—	ns	
		Slave		20+2 × t_{Pcyc}	—		
	SSL setup time	Master	t_{LEAD}	1	8	t_{SPcyc}	
		Slave		4	—	t_{Pcyc}	
	SSL hold time	Master	t_{LAG}	1	8	t_{SPcyc}	
		Slave		4	—	t_{Pcyc}	
	Data output delay time	Master [176-pin LFBGA/ 145-pin TFLGA/ 144-pin LQFP]	t_{OD}	—	20	ns	
		Master [100-pin LQFP/ 85-pin TFLGA]		—	30		
		Slave [176-pin LFBGA/ 145-pin TFLGA/ 144-pin LQFP]		—	3 × t_{Pcyc}+40		
		Slave [100-pin LQFP/ 85-pin TFLGA]		—	3 × t_{Pcyc}+50		

Note 1. tPcyc: PCLK cycle

Table 5.15 Timing of On-Chip Peripheral Modules (5)

Conditions: VCC = PLLVCC = AVCC = VCC_USB = 2.7 to 3.6 V, VREFH = 2.7 V to AVCC
VSS = PLLVSS = AVSS = VREFL = VSS_USB = 0 V
PCLK = 8 to 50 MHz
T_a = -40 to +85°C

Item			Symbol	Min.	Max.	Unit	Test Conditions
RSPI	Data output hold time	Master	t_{OH}	0	—	ns	Figure 5.39 to Figure 5.42
		Slave		0	—		
	Successive transmission delay time	Master	t_{TD}	t_{SPcyc}+2 × t_{Pcyc}	8 × t_{SPcyc} +2 × t_{Pcyc}	ns	
		Slave		4 × t_{Pcyc}	—		
	MOSI, MISO rise/fall time	Output [176-pin LFBGA/ 145-pin TFLGA/ 144-pin LQFP]	t_{Dr}, t_{Df}	—	5	ns	
		Output [100-pin LQFP/ 85-pin TFLGA]		—	10		
		Input		—	1	µs	
	SSL rise/fall time	Output [176-pin LFBGA 145-pin TFLGA 144-pin LQFP]	t_{SSLr}, t_{SSLf}	—	5	ns	
		Output [100-pin LQFP/ 85-pin TFLGA]		—	10		
		Input		—	1	µs	
	Slave access time		t_{SA}	—	4	t_{Pcyc}	Figure 5.41 and Figure 5.42
	Slave output release time		t_{REL}	—	3	t_{Pcyc}	

Note 1. tPcyc: PCLK cycle

Table 5.16 Timing of On-Chip Peripheral Modules (6)

Conditions: VCC = PLLVCC = AVCC = VCC_USB = 2.7 to 3.6 V, VREFH = 2.7 V to AVCC
VSS = PLLVSS = AVSS = VREFL = VSS_USB = 0 V
PCLK = 8 to 50 MHz
T_a = -40 to +85°C

Item		Symbol	Min.*1*2	Max.	Unit	Test Conditions
RIIC (Standard-mode, SMBus) ICFER.FMPE = 0	SCL input cycle time	t_{SCL}	6(12) × t_{IICcyc} + 1300	—	ns	Figure 5.43
	SCL input high pulse width	t_{SCLH}	3(6) × t_{IICcyc} + 300	—	ns	
	SCL input low pulse width	t_{SCLL}	3(6) × t_{IICcyc} + 300	—	ns	
	SCL, SDA input rising time	t_{Sr}	—	1000	ns	
	SCL, SDA input falling time	t_{Sf}	—	300	ns	
	SCL, SDA input spike pulse removal time	t_{SP}	0	1(4) × t_{IICcyc}	ns	
	SDA input bus free time	t_{BUF}	3(6) × t_{IICcyc} + 300	—	ns	
	Start condition input hold time	t_{STAH}	t_{IICcyc} + 300	—	ns	
	Re-start condition input setup time	t_{STAS}	1000	—	ns	
	Stop condition input setup time	t_{STOS}	1000	—	ns	
	Data input setup time	t_{SDAS}	t_{IICcyc} + 50	—	ns	
	Data input hold time	t_{SDAH}	0	—	ns	
	SCL, SDA capacitive load	C_b	—	400	pF	
RIIC (Fast-mode)	SCL input cycle time	t_{SCL}	6(12) × t_{IICcyc} + 600	—	ns	
	SCL input high pulse width	t_{SCLH}	3(6) × t_{IICcyc} + 300	—	ns	
	SCL input low pulse width	t_{SCLL}	3(6) × t_{IICcyc} + 300	—	ns	
	SCL, SDA input rising time	t_{Sr}	20+0.1C_b	300	ns	
	SCL, SDA input falling time	t_{Sf}	20+0.1C_b	300	ns	
	SCL, SDA input spike pulse removal time	t_{SP}	0	1(4) × t_{IICcyc}	ns	
	SDA input bus free time	t_{BUF}	3(6) × t_{IICcyc} + 300	—	ns	
	Start condition input hold time	t_{STAH}	t_{IICcyc} + 300	—	ns	
	Re-start condition input setup time	t_{STAS}	300	—	ns	
	Stop condition input setup time	t_{STOS}	300	—	ns	
	Data input setup time	t_{SDAS}	t_{IICcyc} + 50	—	ns	
	Data input hold time	t_{SDAH}	0	—	ns	
	SCL, SDA capacitive load	C_b	—	400	pF	

Note: t_{IICcyc}: RIIC internal reference clock (IICφ) cycles
Note 1. The value in parentheses is used when ICMR3.NF[1:0] are set to 11b while a digital filter is enabled with ICFER.NFE = 1.
Note 2. C_b indicates the total capacity of the bus line.

Table 5.16 Timing of On-Chip Peripheral Modules (7)

Conditions: VCC = PLLVCC = AVCC = VCC_USB = 2.7 to 3.6 V, VREFH = 2.7 V to AVCC
VSS = PLLVSS = AVSS = VREFL = VSS_USB = 0 V
PCLK = 8 to 50 MHz
T_a = -40 to +85°C

Item		Symbol	Min.*1*2	Max.	Unit	Test Conditions
RIIC (Fast-mode+) ICFER.FMPE = 1	SCL input cycle time	t_{SCL}	6(12) × t_{IICcyc} + 240	—	ns	Figure 5.43
	SCL input high pulse width	t_{SCLH}	3(6) × t_{IICcyc} + 120	—	ns	
	SCL input low pulse width	t_{SCLL}	3(6) × t_{IICcyc} + 120	—	ns	
	SCL, SDA input rising time	t_{Sr}	—	120	ns	
	SCL, SDA input falling time	t_{Sf}	—	120	ns	
	SCL, SDA input spike pulse removal time	t_{SP}	0	1(4) × t_{IICcyc}	ns	
	SDA input bus free time	t_{BUF}	3(6) × t_{IICcyc} + 120	—	ns	
	Start condition input hold time	t_{STAH}	t_{IICcyc} + 120		ns	
	Re-start condition input setup time	t_{STAS}	120	—	ns	
	Stop condition input setup time	t_{STOS}	120	—	ns	
	Data input setup time	t_{SDAS}	t_{IICcyc} + 20	—	ns	
	Data input hold time	t_{SDAH}	0	—	ns	
	SCL, SDA capacitive load	C_b	—	550	pF	

Note: t_{IICcyc}: RIIC internal reference clock (IICφ) cycles
Note 1. The value in parentheses is used when ICMR3.NF[1:0] are set to 11b while a digital filter is enabled with ICFER.NFE = 1.
Note 2. C_b indicates the total capacity of the bus line.

Table 5.17 Timing of On-Chip Peripheral Modules (8)

Conditions: VCC = PLLVCC = AVCC = VCC_USB = 2.7 to 3.6 V, VREFH = 2.7 V to AVCC
VSS = PLLVSS = AVSS = VREFL = VSS_USB = 0 V
ICLK = 12.5 to 100 MHz
T_a = -40 to +85°C

Item		Symbol	Min.	Max.	Unit	Test Conditions
ETHERC(RMII)	REF50CK cycle time	T_{ck}	20	—	ns	Figure 5.44 to Figure 5.47
	REF50CK frequency Typ. 50 MHz	—	—	50 + 100ppm	MHz	
	REF50CK duty	—	35	65	%	
	REF50CK rise/fall time	$T_{ckr/ckf}$	0.5	3.5	ns	
	RMII_xxxx*1 output delay time	T_{co}	2.5	12.5	ns	
	RMII_xxxx*2 setup time	T_{su}	3	—	ns	
	RMII_xxxx*2 hold time	T_{hd}	1	—	ns	
	RMII_xxxx*1*2 rise/fall time	Tr/Tf	0.5	6	ns	
	ET_MDIO setup time	t_{MDIOs}	10	—	ns	Figure 5.48
	ET_MDIO hold time	t_{MDIOh}	10	—	ns	
	ET_MDIO output hold time*3	t_{MDIODh}	5	—	ns	Figure 5.49
	ET_WOL output delay time	t_{WOLd}	1	20	ns	Figure 5.50

Note 1. RMII_TXD_EN, RMII_TXD1, RMII_TXD0
Note 2. RMII_CRS_DV, RMII_RXD1, RMII_RXD0, RMII_RX_ER
Note 3. The user program must make settings so that this stipulation is satisfied.

Table 5.17 Timing of On-Chip Peripheral Modules (9)

Conditions: VCC = PLLVCC = AVCC = VCC_USB = 2.7 to 3.6 V, VREFH = 2.7 V to AVCC
VSS = PLLVSS = AVSS = VREFL = VSS_USB = 0 V
ICLK = 12.5 to 100 MHz
T_a = -40 to +85°C

Item		Symbol	Min.	Max.	Unit	Test Conditions
ETHERC(MII)	ET_TX_CLK cycle time	t_{Tcyc}	40	—	ns	—
	ET_TX_EN output delay time	t_{TENd}	1	20	ns	Figure 5.51
	ET_ETXD0 to ET_ETXD3 output delay time	t_{MTDd}	1	20	ns	
	ET_CRS setup time	t_{CRSs}	10	—	ns	
	ET_CRS hold time	t_{CRSh}	10	—	ns	
	ET_COL setup time	t_{COLs}	10	—	ns	Figure 5.52
	ET_COL hold time	t_{COLh}	10	—	ns	
	ET_RX_CLK cycle time	t_{TRcyc}	40	—	ns	—
	ET_RX_DV setup time	t_{RDVs}	10		ns	Figure 5.53
	ET_RX_DV hold time	t_{RDVh}	10	—	ns	
	ET_ERXD0 to ET_ERXD3 setup time	t_{MRDs}	10	—	ns	
	ET_ERXD0 to ET_ERXD3 hold time	t_{MRDh}	10	—	ns	
	ET_RX_ER setup time	t_{RERs}	10	—	ns	Figure 5.54
	ET_RX_ER hold time	t_{RESh}	10	—	ns	
	ET_MDIO setup time	t_{MDIOs}	10	—	ns	Figure 5.55
	ET_MDIO hold time	t_{MDIOh}	10	—	ns	
	ET_MDIO utput hold time	t_{MDIOdh}	5	—	ns	Figure 5.56
	ET_WOL output delay time	t_{WOLd}	1	20	ns	Figure 5.57

Note 1. RMII_TXD_EN, RMII_TXD1, RMII_TXD0
Note 2. RMII_CRS_DV, RMII_RXD1, RMII_RXD0, RMII_RX_ER
Note 3. The user program must make settings so that this stipulation is satisfied.

Table 5.18 Timing of On-Chip Peripheral Modules (10)

Conditions: VCC = PLLVCC = AVCC = VCC_USB = 2.7 to 3.6 V, VREFH = 2.7 V to AVCC
VSS = PLLVSS = AVSS = VREFL = VSS_USB = 0 V
PCLK = 8 to 50 MHz
T_a = -40 to +85°C

Item	Symbol	Min.	Typ.	Max.	Unit	Test Conditions
TCK clock cycle time	t_{TCKcyc}	100	—	—	ns	Figure 5.58
TCK clock high pulse width	t_{TCKH}	45	—	—	ns	
TCK clock low pulse width	t_{TCKL}	45	—	—	ns	
TCK clock rising time	t_{TCKr}	—	—	5	ns	
TCK clock falling time	t_{TCKf}	—	—	5	ns	
TRST# pulse width	t_{TRSTW}	20	—	—	t_{TCKcyc}	Figure 5.59
TMS setup time	t_{TMSS}	20	—	—	ns	Figure 5.60
TMS hold time	t_{TMSH}	20	—	—	ns	
TDI setup time	t_{TDIS}	20	—	—	ns	
TDI hold time	t_{TDIH}	20	—	—	ns	
TDO data delay time	t_{TDOD}	—	—	40	ns	

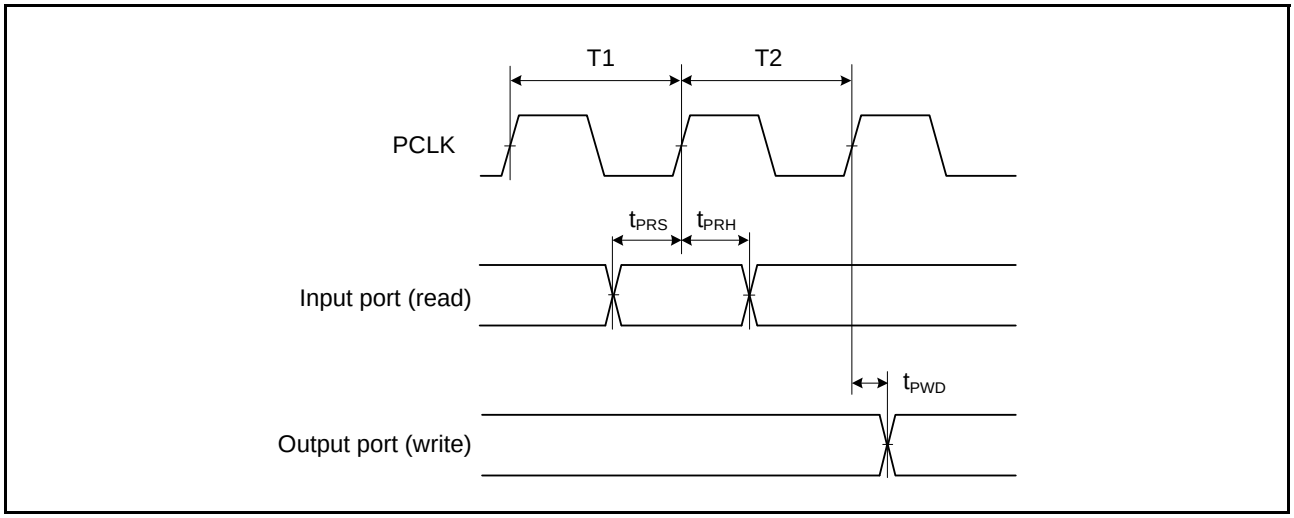

Figure 5.25 I/O Port Input/Output Timing

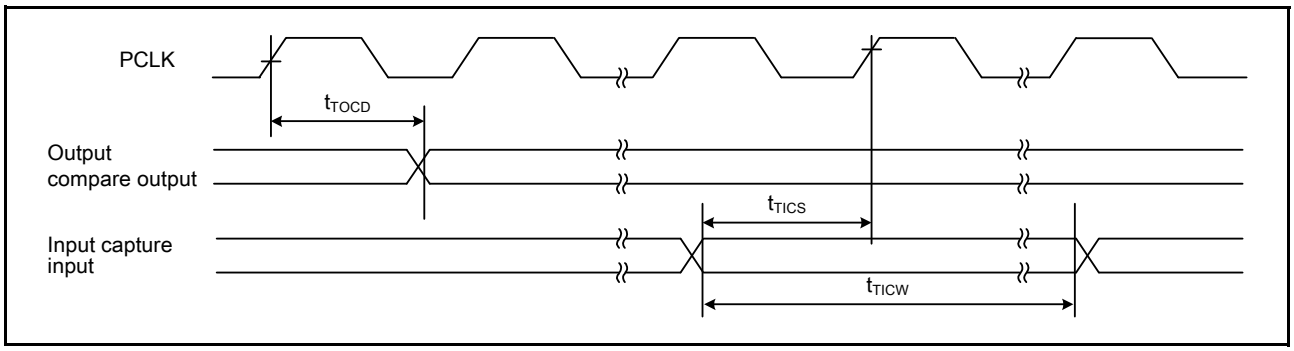

Figure 5.26 MTU2 Input/Output Timing

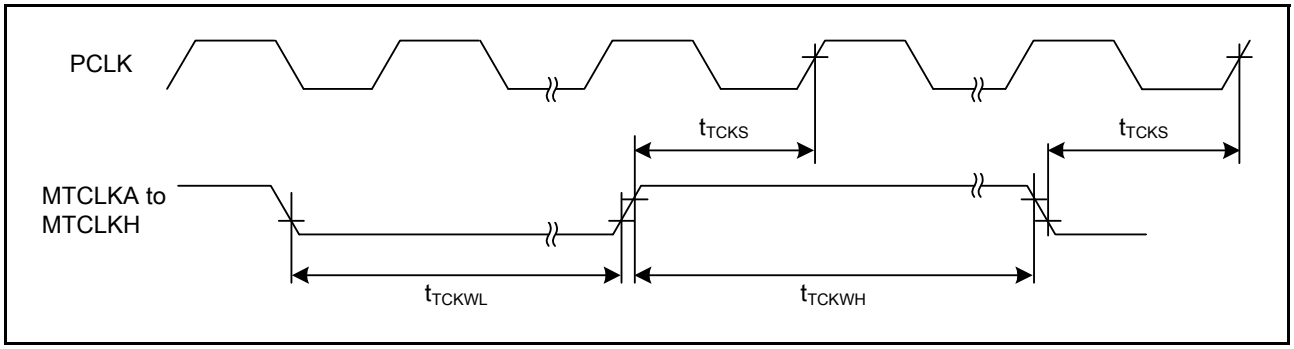

Figure 5.27 MTU2 Clock Input Timing

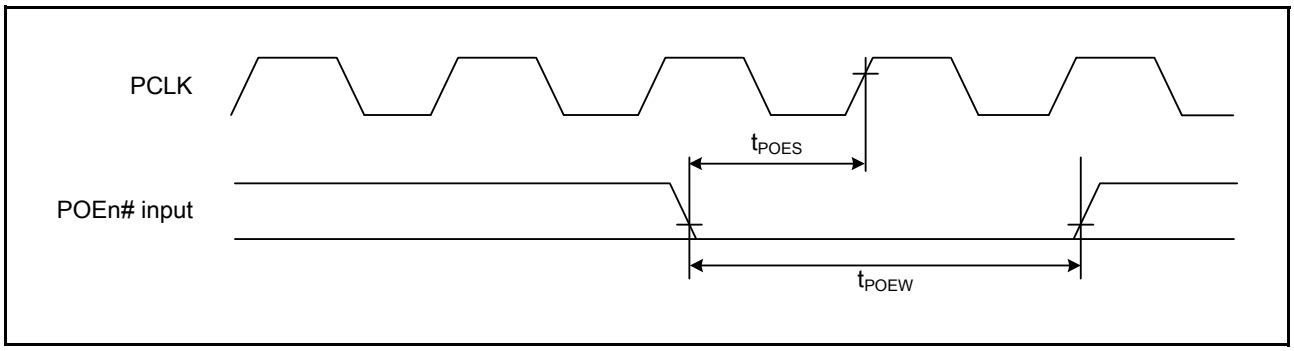

Figure 5.28 POE# Input Timing

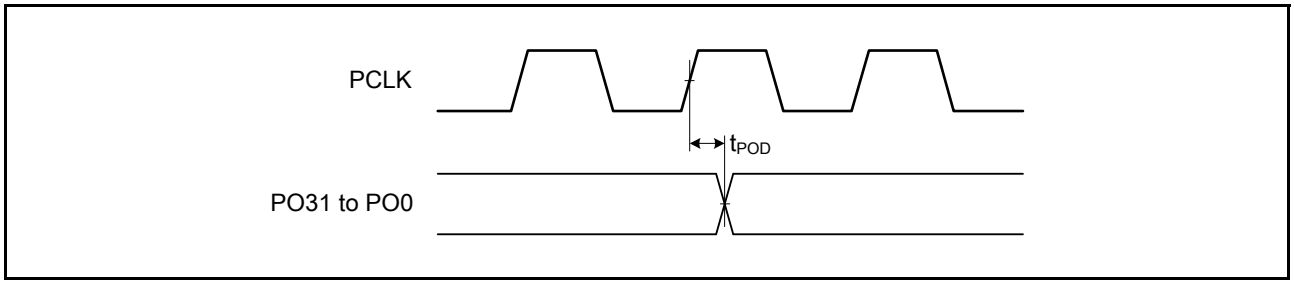

Figure 5.29 PPG Output Timing

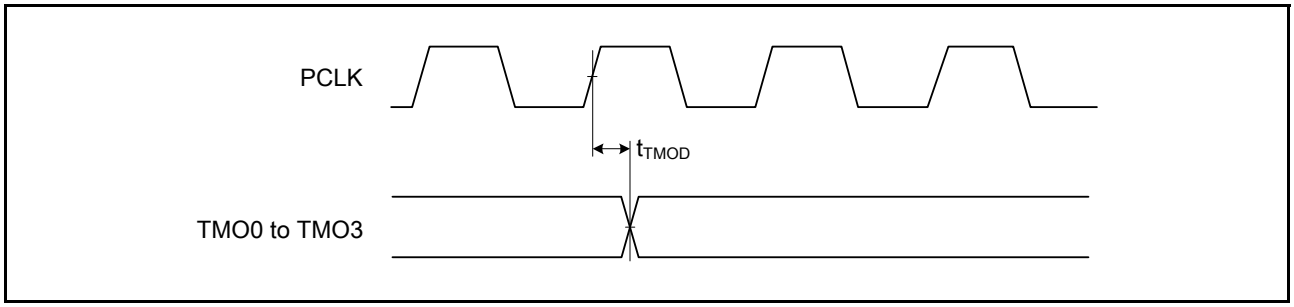

Figure 5.30 8-Bit Timer Output Timing

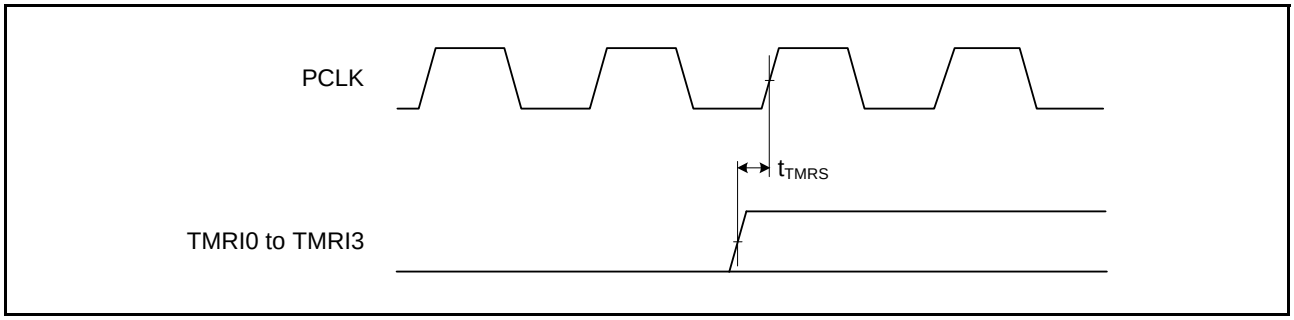

Figure 5.31 8-Bit Timer Reset Input Timing

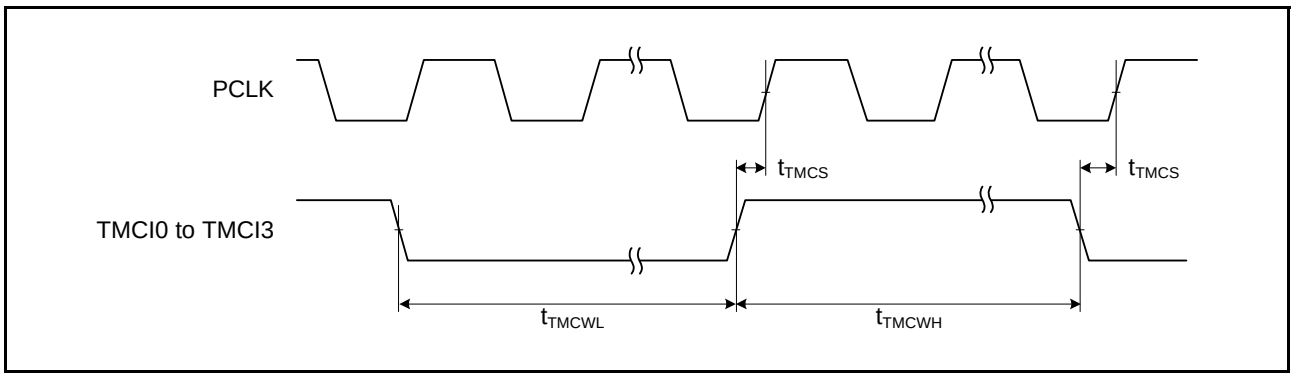

Figure 5.32 8-Bit Timer Clock Input Timing

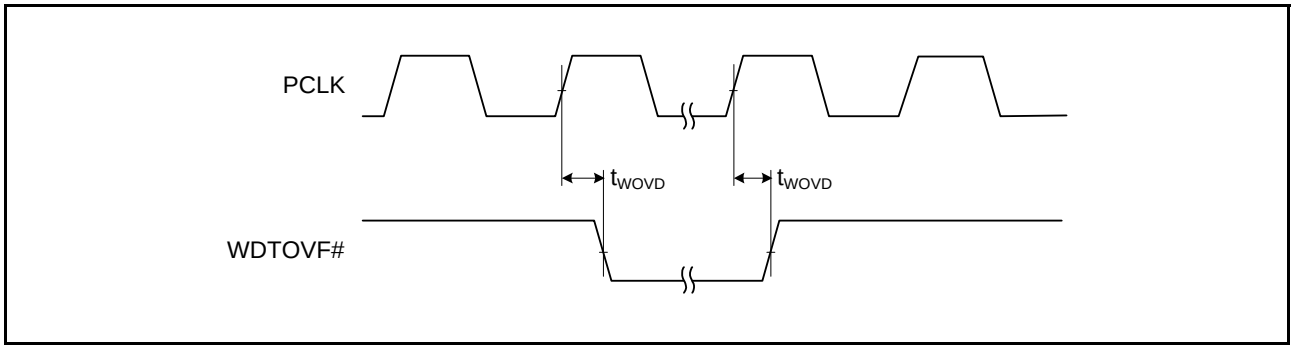

Figure 5.33 WDT Output Timing

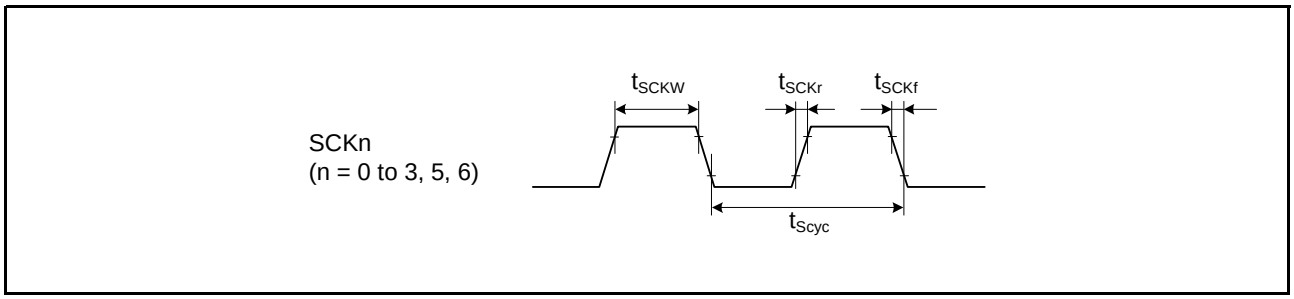

Figure 5.34 SCK Clock Input Timing

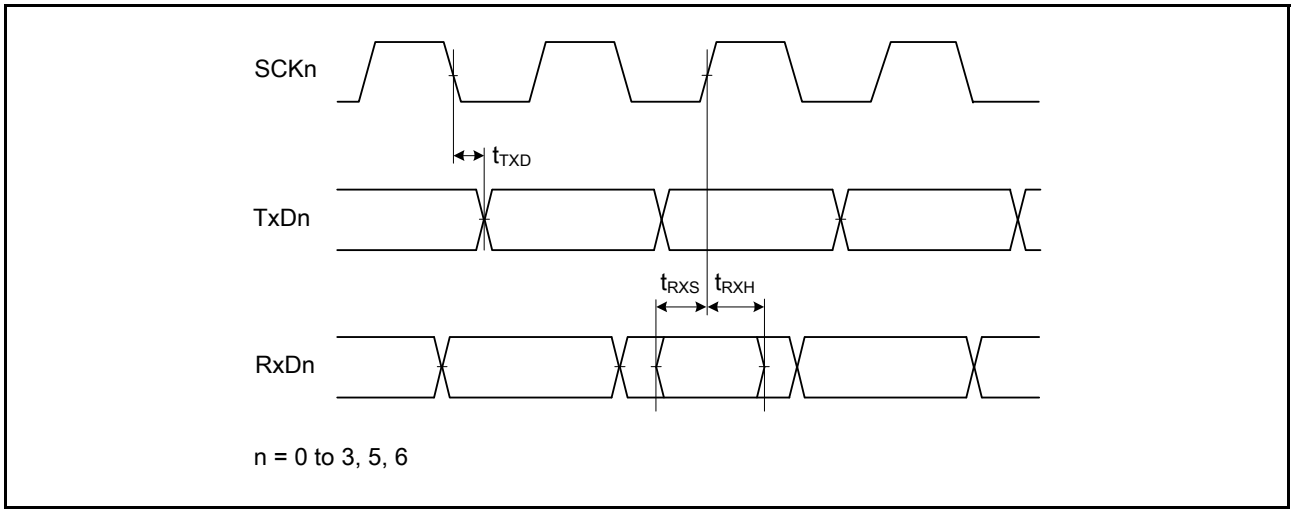

Figure 5.35 SCI Input/Output Timing: Clock Synchronous Mode

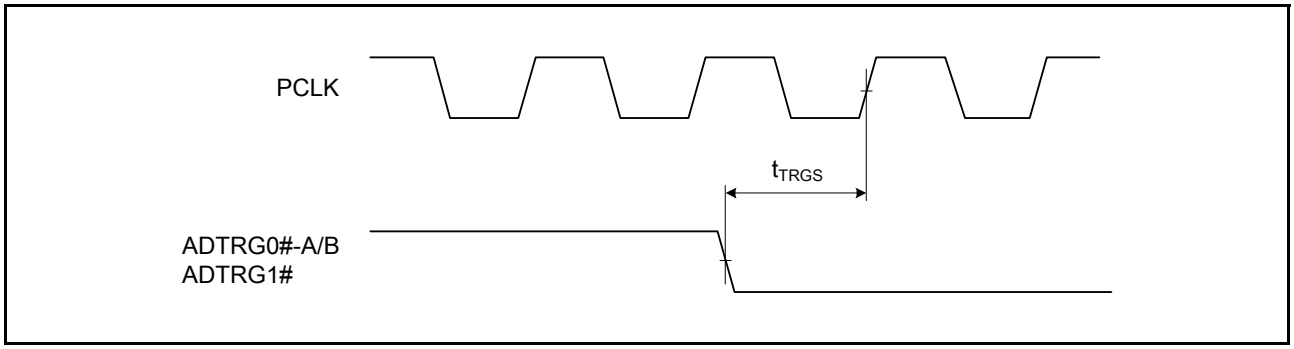

Figure 5.36 A/D Converter External Trigger Input Timing

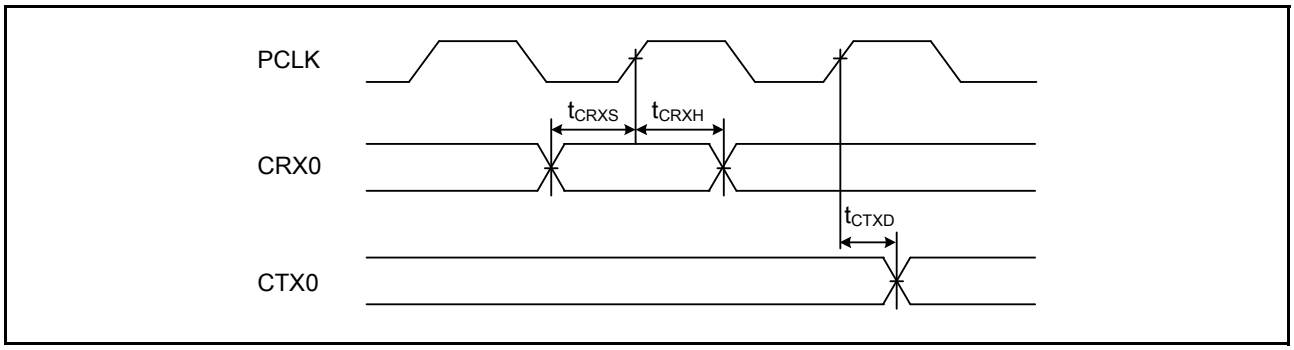

Figure 5.37 CAN Input/Output Timing

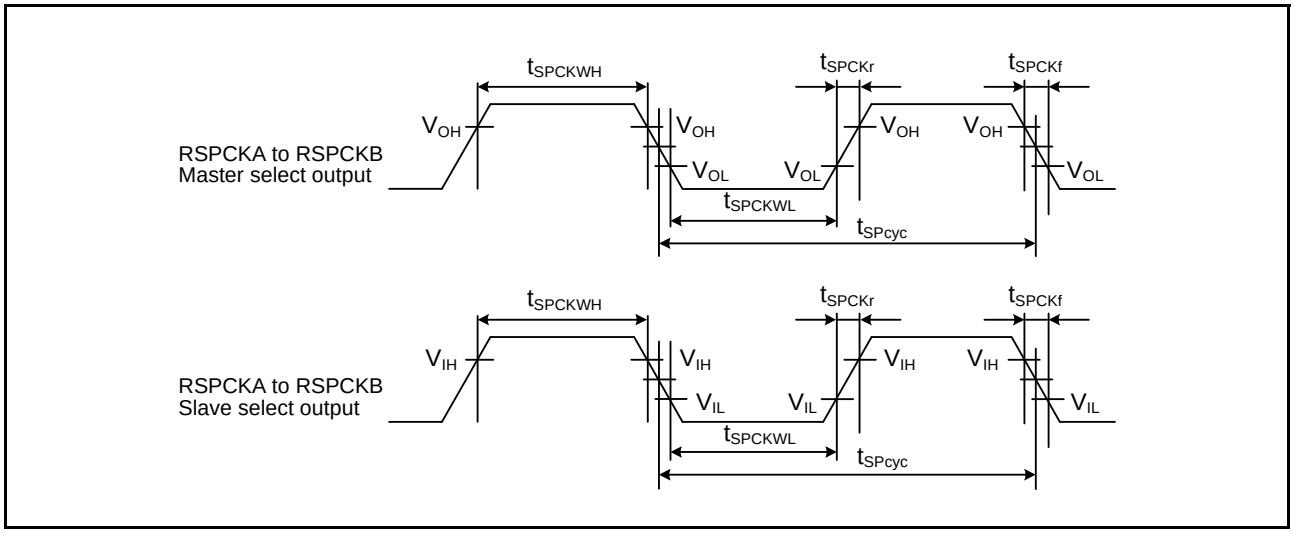

Figure 5.38 RSPI Clock Timing

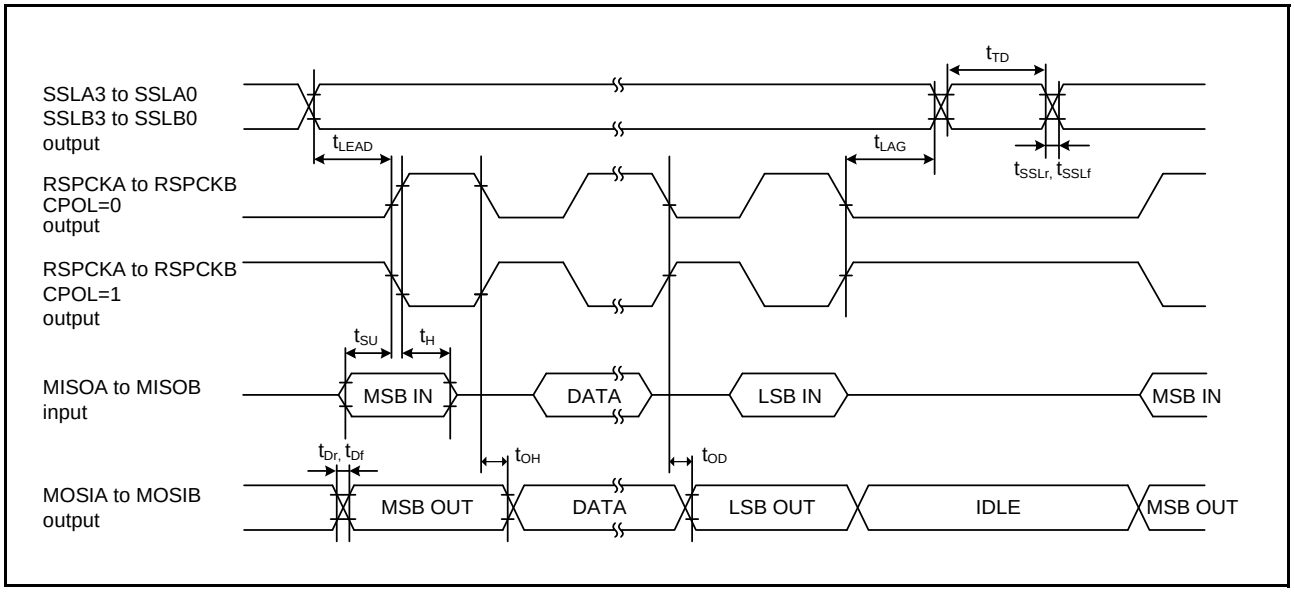

Figure 5.39 RSPI Timing (Master, CPHA = 0)

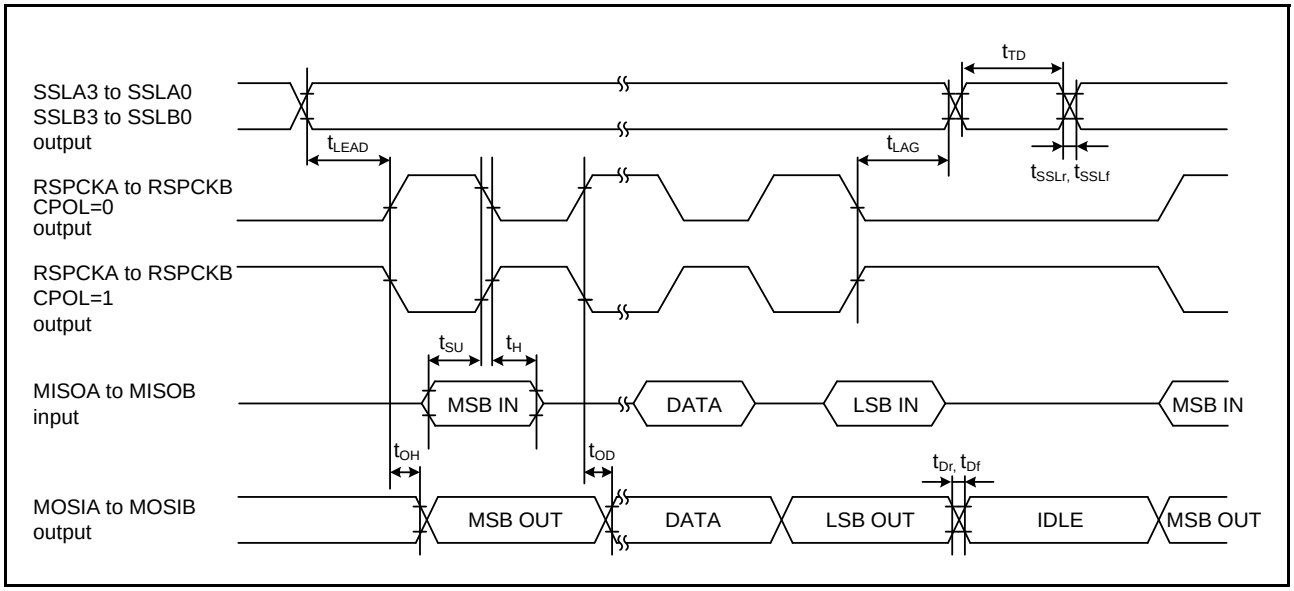

Figure 5.40 RSPI Timing (Master, CPHA = 1)

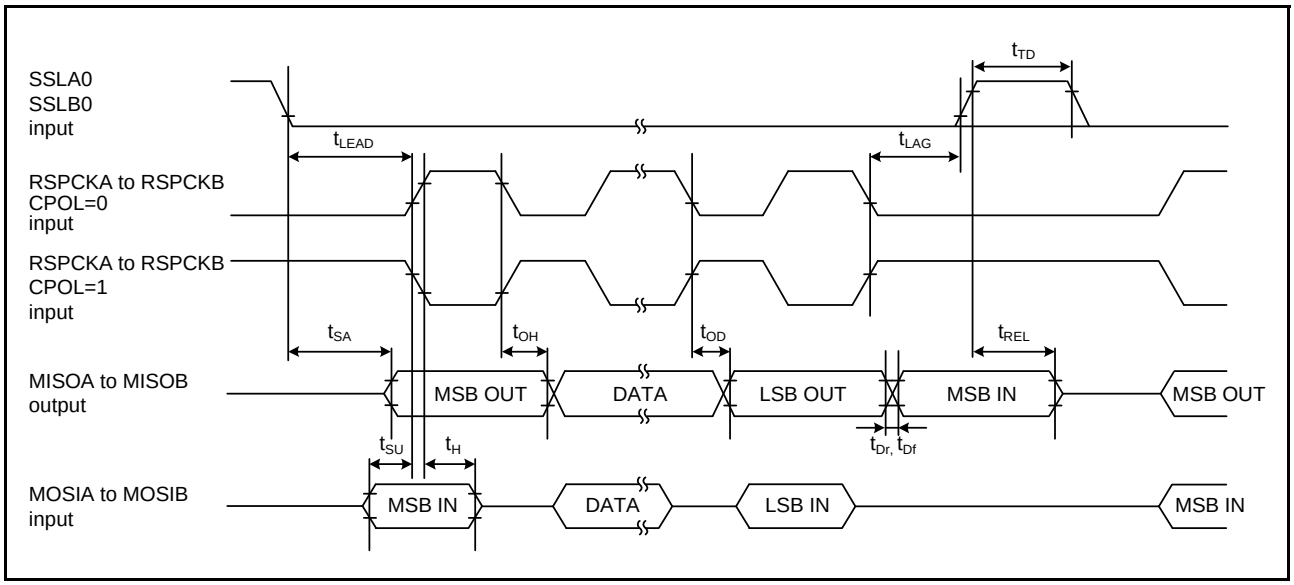

Figure 5.41 RSPI Timing (Slave, CPHA = 0)

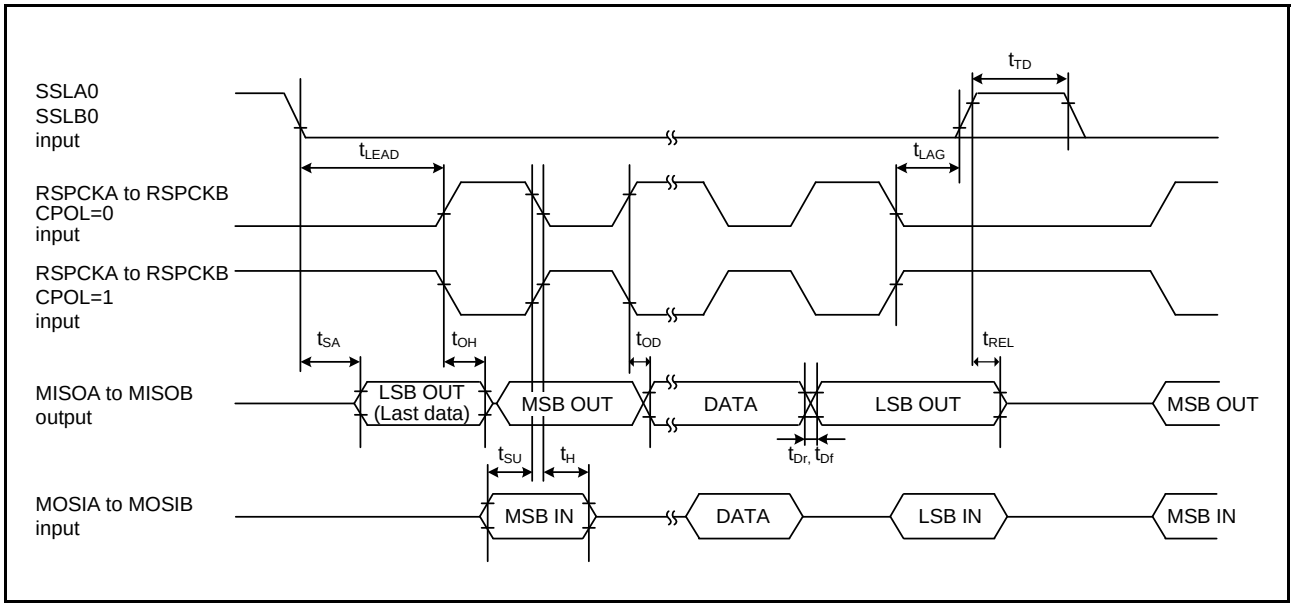

Figure 5.42 RSPI Timing (Slave, CPHA = 1)

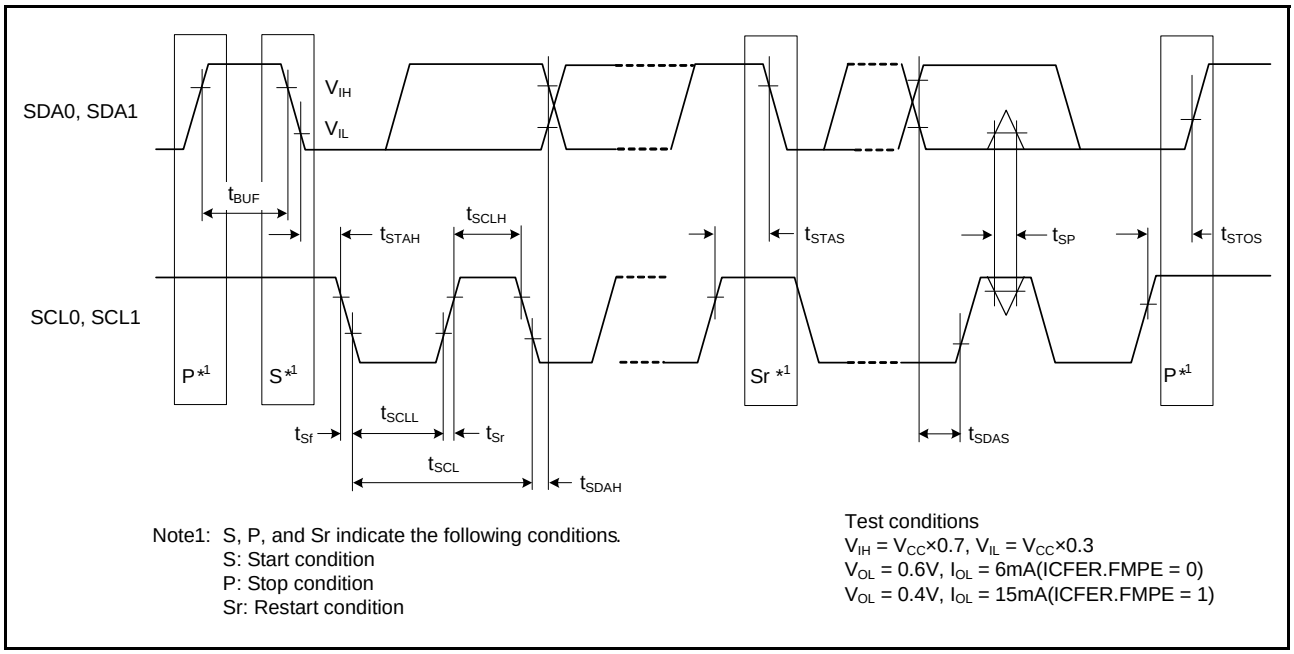

Note1: S, P, and Sr indicate the following conditions.
S: Start condition
P: Stop condition
Sr: Restart condition

Test conditions
$V_{IH} = V_{CC}\times0.7$, $V_{IL} = V_{CC}\times0.3$
$V_{OL} = 0.6V$, $I_{OL} = 6mA$(ICFER.FMPE = 0)
$V_{OL} = 0.4V$, $I_{OL} = 15mA$(ICFER.FMPE = 1)

Figure 5.43 I2C Bus Interface Input/Output Timing

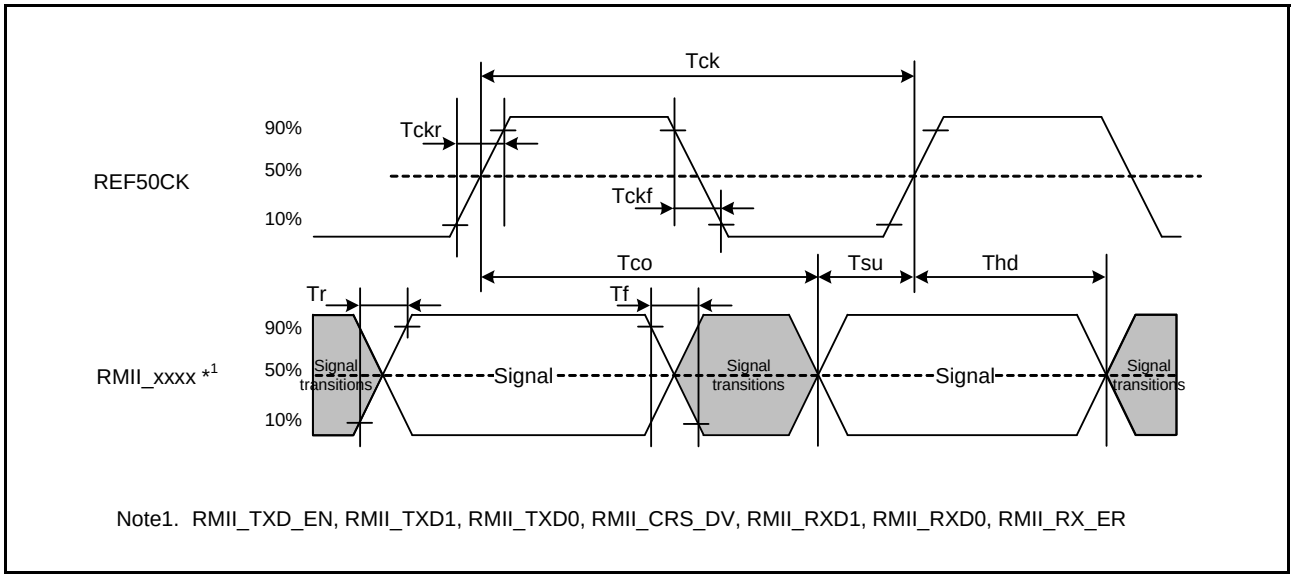

Figure 5.44 REF50CK and RMII Signal Timing

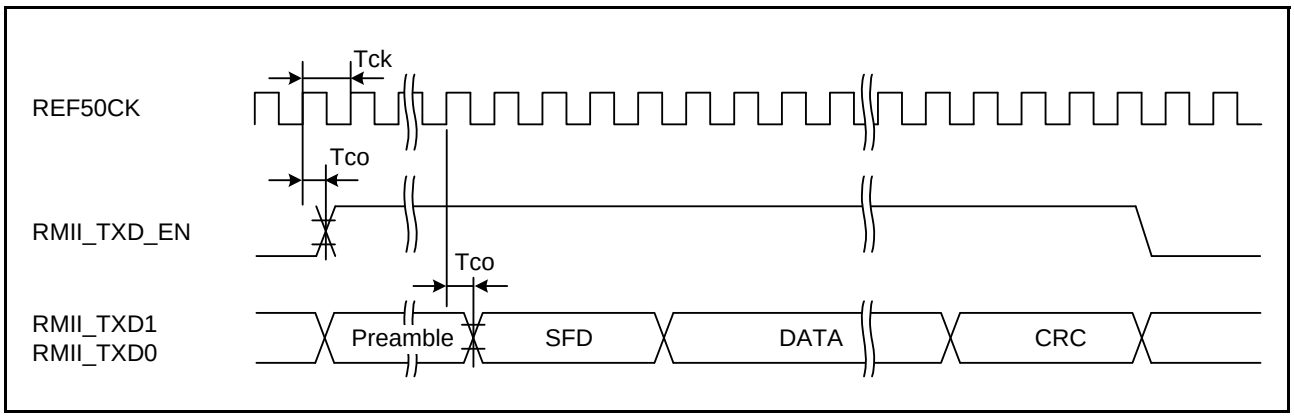

Figure 5.45 RMII Transmission Timing

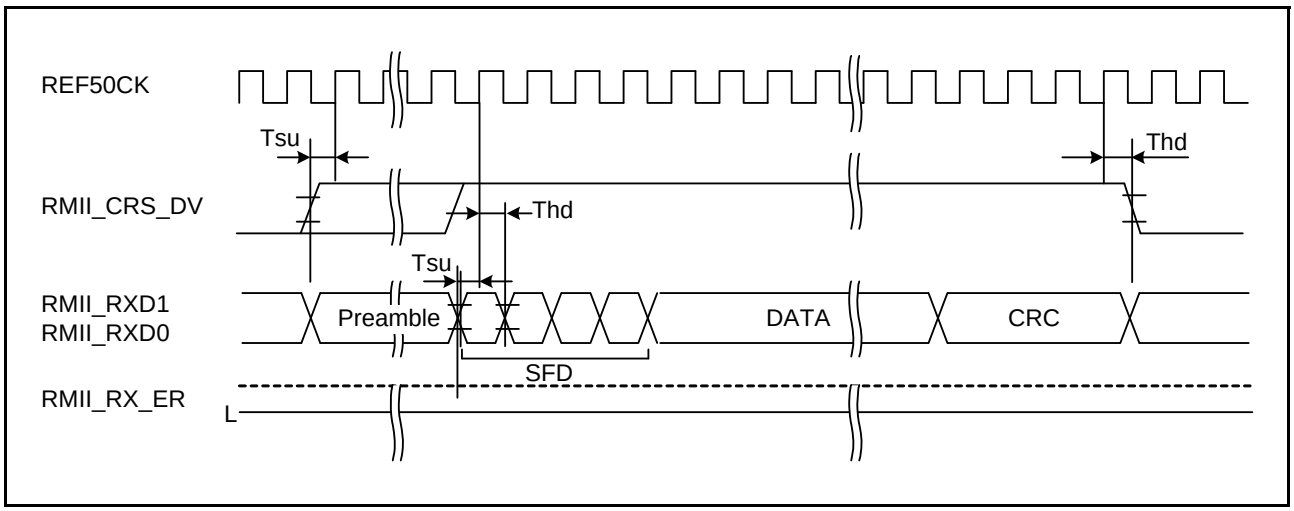

Figure 5.46 RMII Reception Timing (Normal Operation)

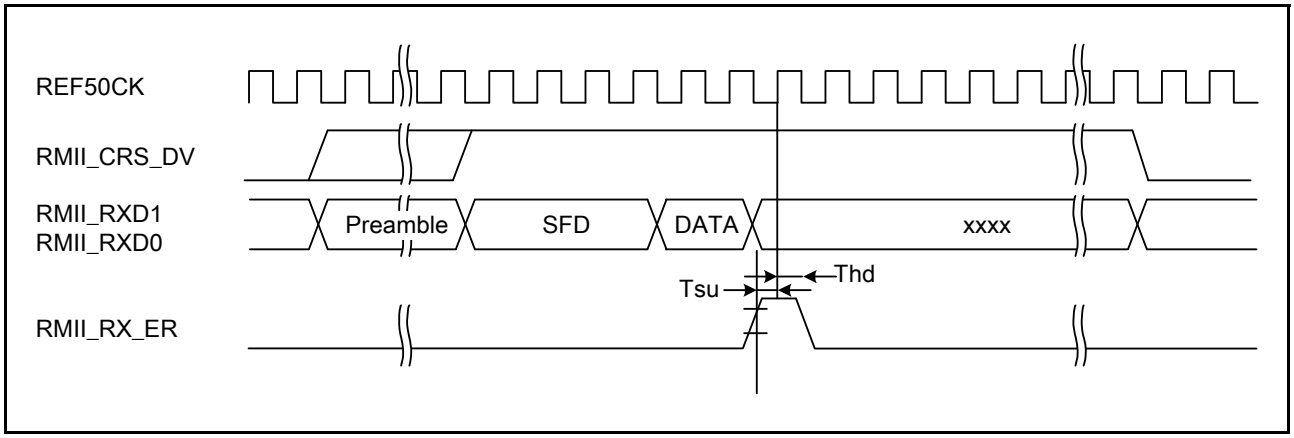

Figure 5.47 RMII Reception Timing (Error Occurrence)

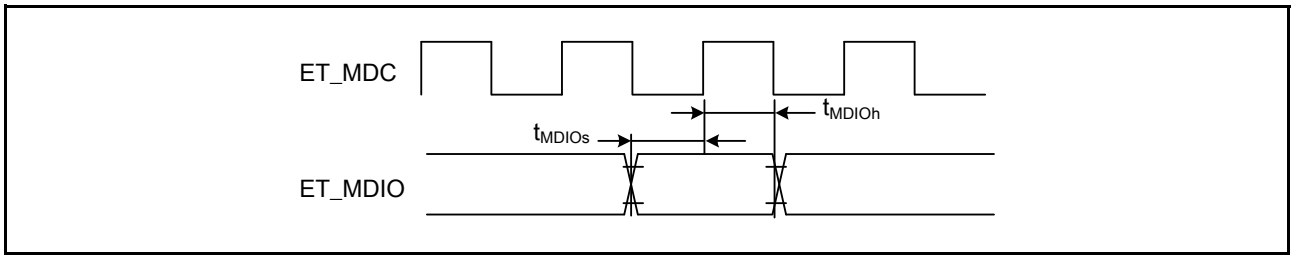

Figure 5.48 MDIO Input Timing (RMII)

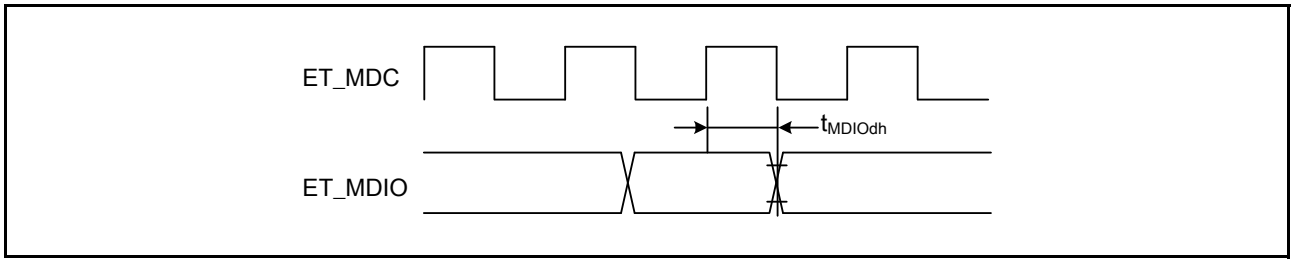

Figure 5.49 MDIO Output Timing (RMII)

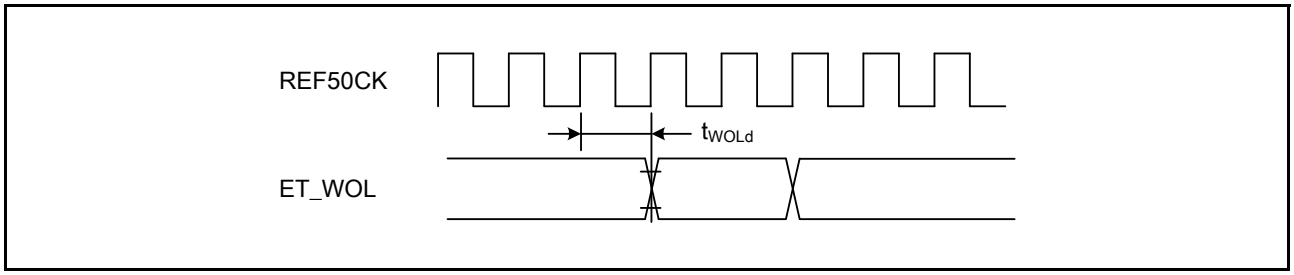

Figure 5.50 WOL Output Timing (RMII)

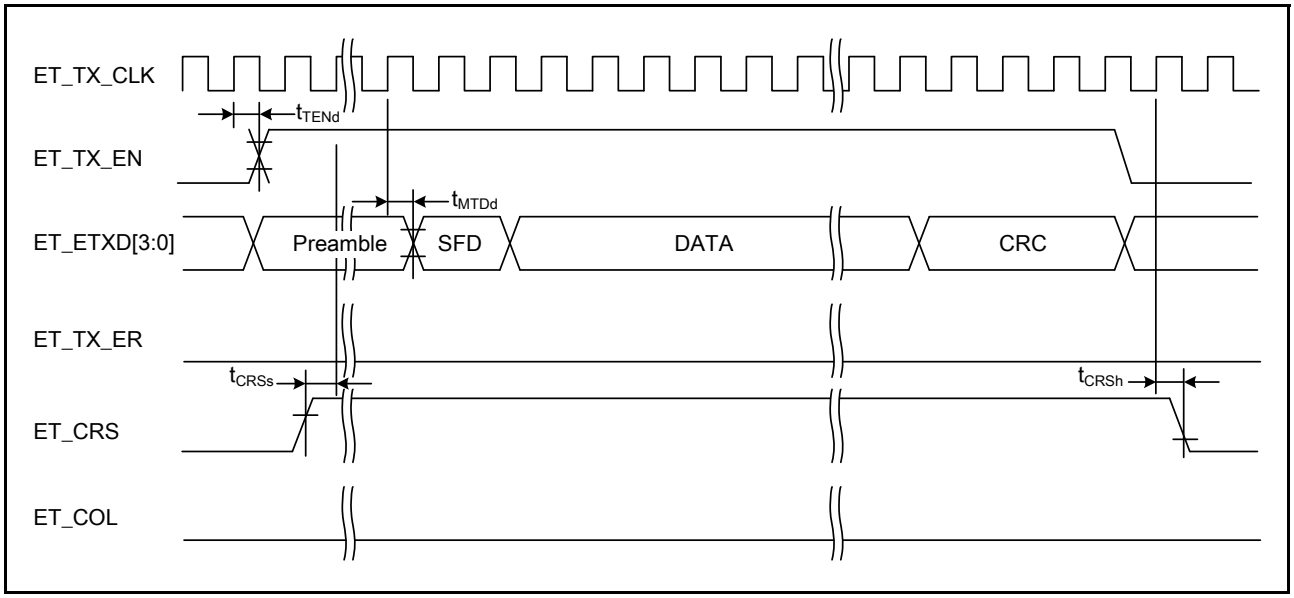

Figure 5.51 MII Transmission Timing (Normal Operation)

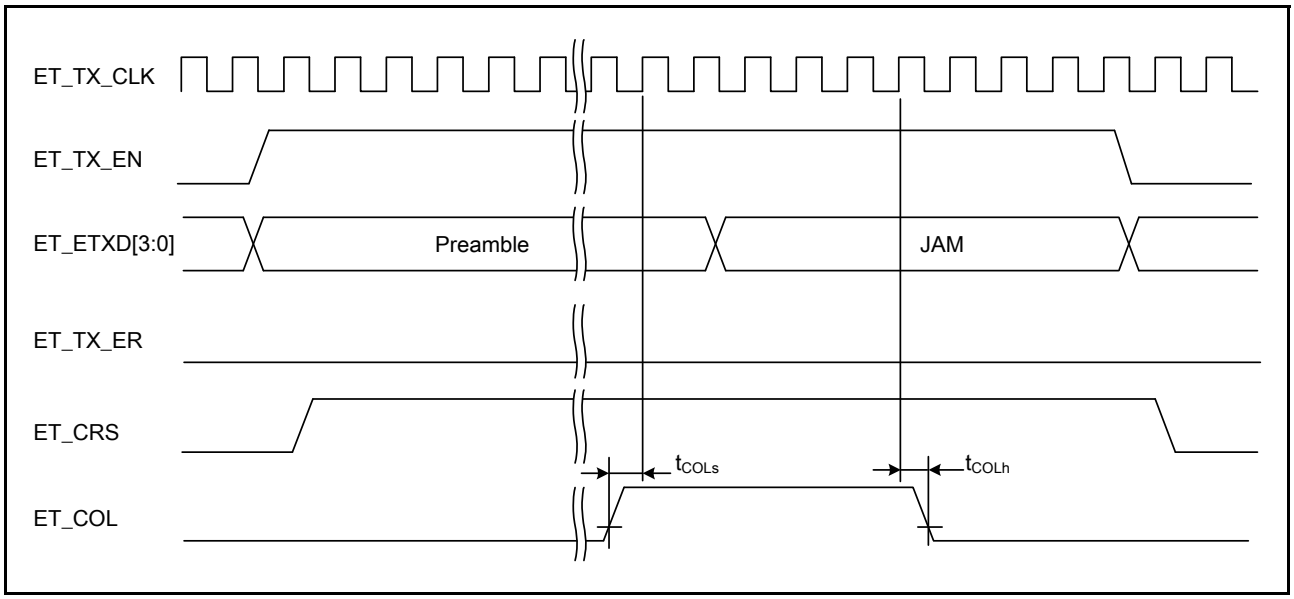

Figure 5.52 MII Transmission Timing (Conflict Occurrence)

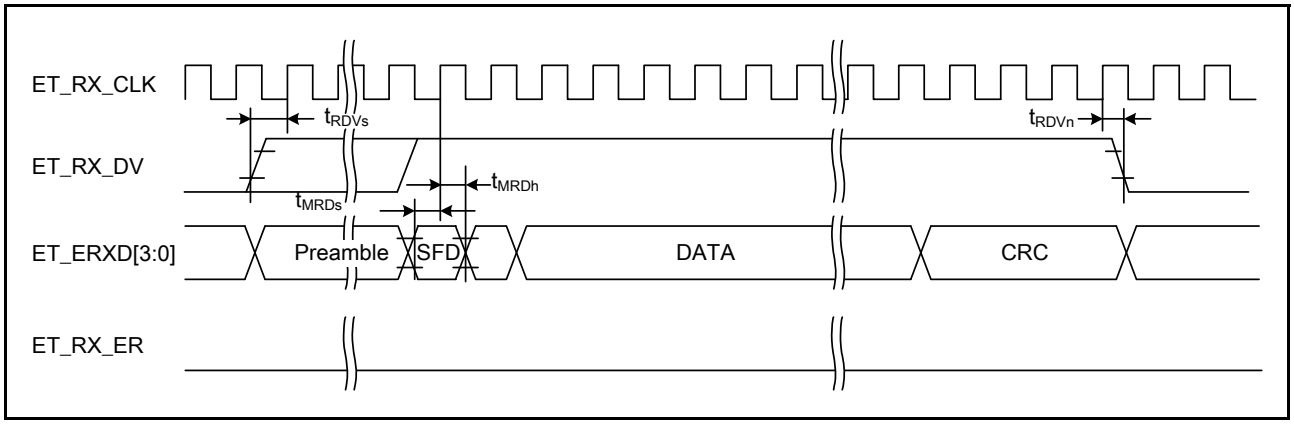

Figure 5.53 MII Reception Timing (Normal Operation)

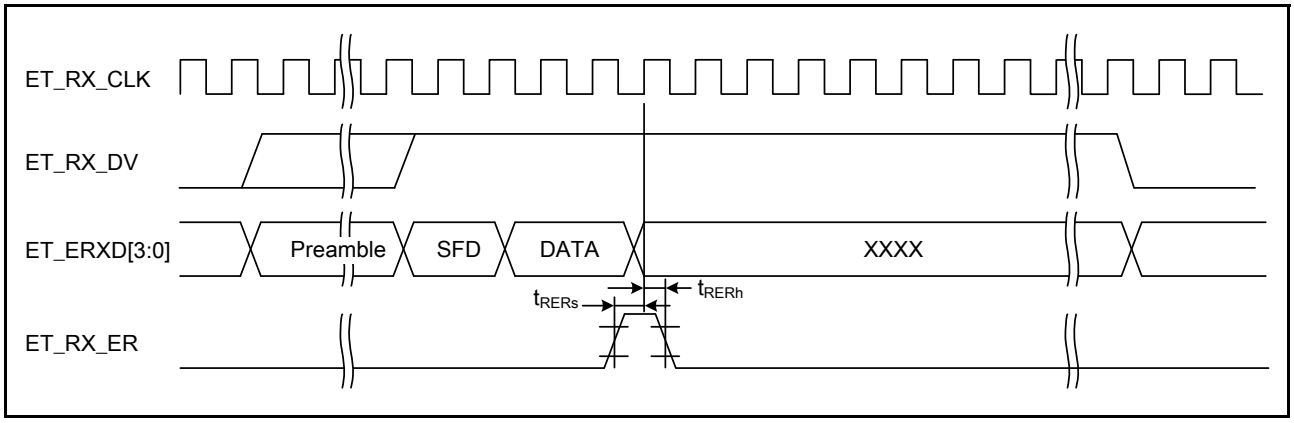

Figure 5.54 MII Reception Timing (Error Occurrence)

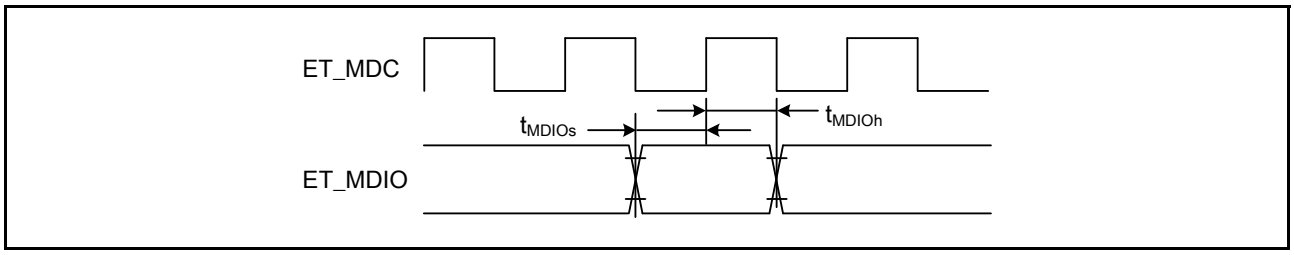

Figure 5.55 MDIO Input Timing (MII)

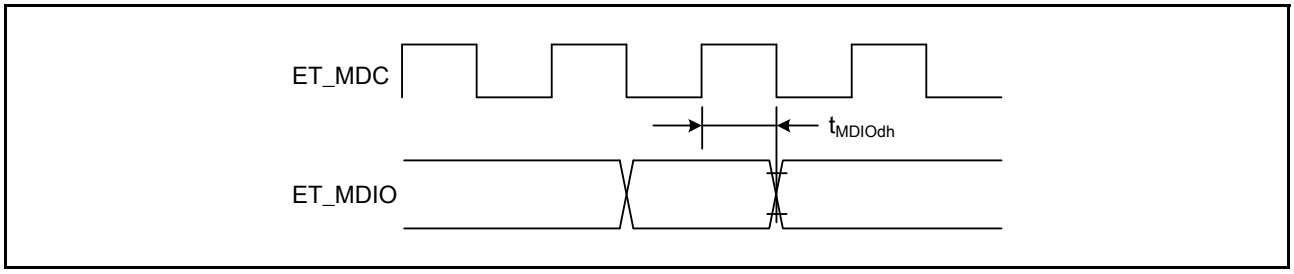

Figure 5.56 MDIO Output Timing (MII)

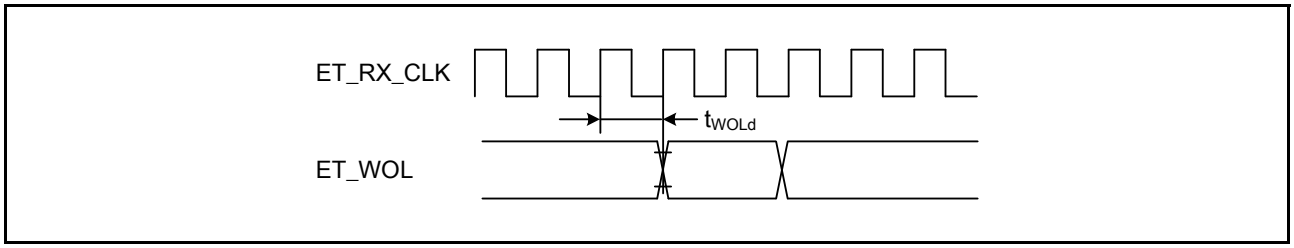

Figure 5.57 WOL Output Timing (MII)

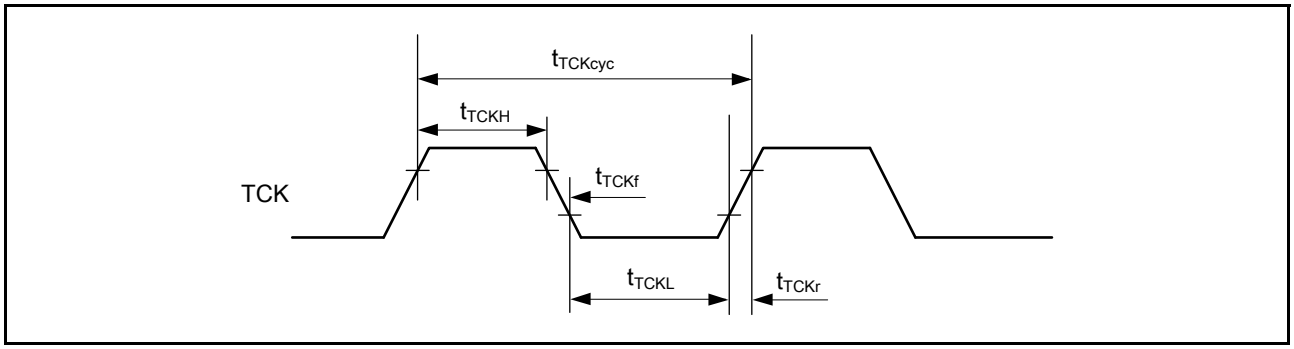

Figure 5.58 Boundary Scan TCK Timing

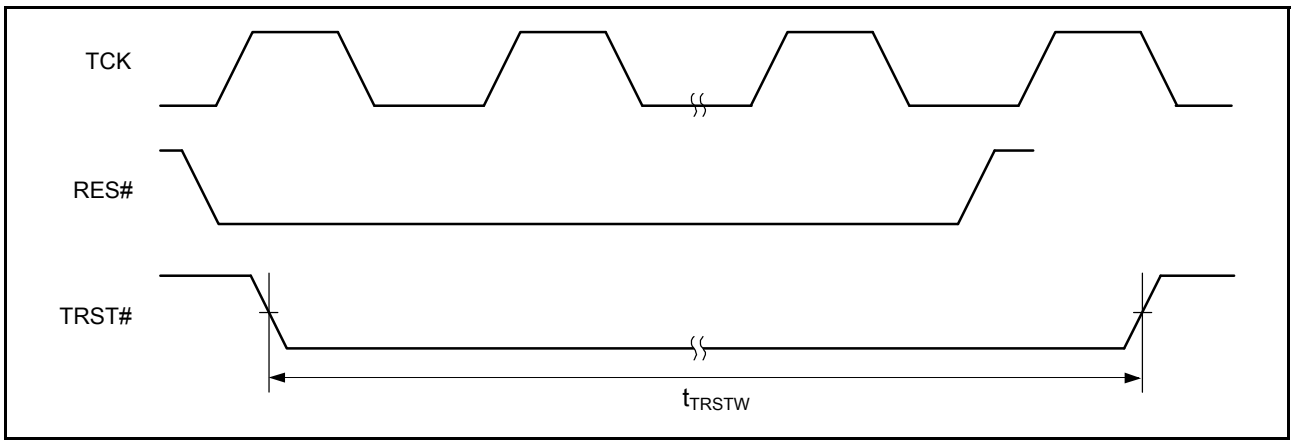

Figure 5.59 Boundary Scan TRST# Timing

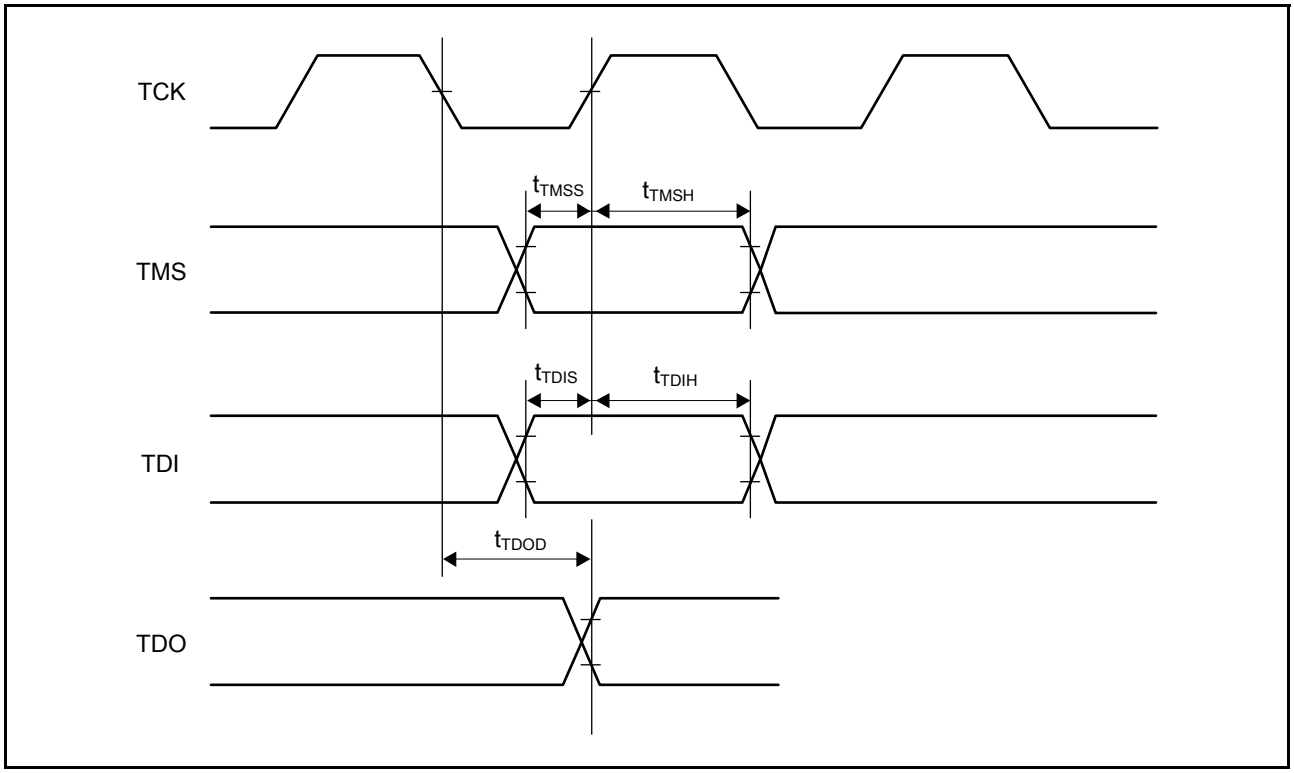

Figure 5.60 Boundary Scan Input/Output Timing

5.4 USB Characteristics

Table 5.19 Internal USB Full-Speed Characteristics (DP, DM Pin Characteristics)

Conditions: VCC = PLLVCC = AVCC = VCC_USB = 3.0 to 3.6 V, VREFH = 3.0 V to AVCC
VSS = PLLVSS = AVSS = VREFL = VSS_USB = 0 V
PCLK = 24 to 50 MHz
T_a = -40 to +85°C

Item		Symbol	Min.	Max.	Unit	Test Conditions	
Input characteristics	Input high level voltage	V_{IH}	2.0	—	V		Figure 5.61 and Figure 5.62
	Input low level voltage	V_{IL}	—	0.8	V		
	Differential input Sensitivity	V_{DI}	0.2	—	V	| DP — DM |	
	Differential commom mode range	V_{CM}	0.8	2.5	V		
Output characteristics	Output high level voltage	V_{OH}	2.8	3.6	V	I_{OH} = -200μA	
	Output low level voltage	V_{OL}	0.0	0.3	V	I_{OL} = 2 mA	
	Cross over voltage	V_{CRS}	1.3	2.0	V		
	Rising time	t_{Lr}	4	20	ns		
	Falling time	t_{Lf}	4	20	ns		
	Rising/falling time ratio	t_{Lr} / t_{Lf}	90	111.11	%	t_{Lr} / t_{Lf}	
	Output resistance	Z_{DRV}	28	44	Ω	Rs = 22Ω included	

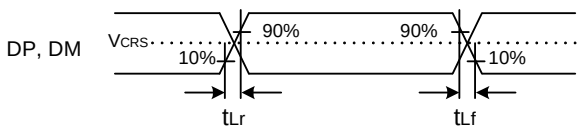

Figure 5.61 DP, DM Output Timing (Full-Speed)

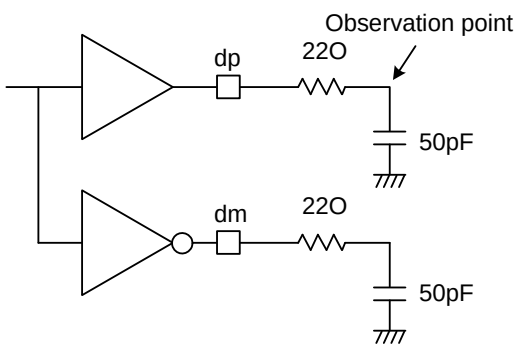

Figure 5.62 Test Circuit (Full-Speed)

5.5 A/D Conversion Characteristics

Table 5.20 10-Bit A/D Conversion Characteristics

Conditions: VCC = PLLVCC = AVCC = VCC_USB = 2.7 to 3.6 V, VREFH = 2.7 V to AVCC
VSS = PLLVSS = AVSS = VREFL = VSS_USB = 0 V
PCLK = 8 to 50 MHz
T_a = -40 to +85°C

Item			Min.	Typ.	Max.	Unit	Test Conditions
Resolution			10	10	10	bits	
Conversion time*1 (PCLK = 50-MHz operation)	With 0.1-µF external capacitor	When the capacitor is charged enough*2	0.8 (0.3)*3	—	—	µs	Sampling 15 states
	Without external capacitor	Permissible signal source impedance (max.) = 1.0 kΩ	1.0 (0.5)*3	—	—		Sampling 25 states
		Permissible signal source impedance (max.) = 5.0 kΩ	2.6 (2.1)*3	—	—		Sampling 105 states
Analog input capacitance			—	—	6.0	pF	
INL integral nonlinearity error			—	±1.5	±3.0	LSB	
Offset error			—	±1.5	±3.0	LSB	
Full-scale error			—	±1.5	±3.0	LSB	
Quantization error			—	±0.5	—	LSB	
Absolute accuracy			—	±1.5	±3.0	LSB	
DNL differential nonlinearity error			—	±0.5	±1.0	LSB	

Note 1. The conversion time includes the sampling time and the comparison time. As the test conditions, the number of sampling states is indicated.
Note 2. The scanning is not supported.
Note 3. The value in parentheses indicates the sampling time.

Table 5.21 12-Bit A/D Conversion Characteristics

Conditions: VCC = PLLVCC = AVCC = VCC_USB = 2.7 to 3.6 V, VREFH = 2.7 V to AVCC
VSS = PLLVSS = AVSS = VREFL = VSS_USB = 0 V
PCLK = 8 to 50 MHz
T_a = -40 to +85°C

Item	Min.	Typ.	Max.	Unit	Test Conditions
Resolution	12	12	12	bits	
Conversion time*1	1.0	—	—	µs	AVCC ≥ 3.0
	2.0	—	—	µs	AVCC ≥ 2.7
Analog input capacitance	—	—	30	pF	
Offset error	—	±2.0	±7.5	LSB	
Full-scale error	—	±2.0	±7.5	LSB	
Quantization error	—	±0.5	—	LSB	
Absolute accuracy	—	±2.5	±8.0	LSB	
Nonlinearity error	—	±2.0	±4.0	LSB	

Note 1. The time conversion takes is the sum of the sampling interval and the time comparison takes (permissible signal-source impedance is up to 1.0 kΩ)

5.6 D/A Conversion Characteristics

Table 5.22 D/A Conversion Characteristics

Conditions: VCC = PLLVCC = AVCC = VCC_USB = 2.7 to 3.6 V, VREFH = 2.7 V to AVCC
VSS = PLLVSS = AVSS = VREFL = VSS_USB = 0 V
T_a = -40 to +85°C

Item	Min.	Typ.	Max.	Unit	Test Conditions
Resolution	10	10	10	bits	
Conversion time	—	—	3.0	μs	20-pF capacitive load
Absolute accuracy	—	±2.0	±4.0	LSB	2-MΩ resistive load
	—	—	±3.0	LSB	4-MΩ resistive load
	—	—	±2.0	LSB	10-MΩ resistive load
RO output resistance	—	3.6	—	kΩ	

5.7 Power-on Reset Circuit, Voltage Detection Circuit Characteristics

Table 5.23 Power-on Reset Circuit, Voltage Detection Circuit Characteristics

Conditions: VCC = PLLVCC = AVCC = VCC_USB = 2.7 to 3.6 V, VREFH = 2.7 V to AVCC
VSS = PLLVSS = AVSS = VREFL = VSS_USB = 0 V
T_a = -40 to +85°C

Item		Symbol	Min.	Typ.	Max.	Unit	Test Conditions
Voltage detection level	Power-on reset (POR)	V_{POR}	2.48	2.58	2.68	V	Figure 5.63
	Voltage detection circuit (LVD)	Vdet1	2.75	2.85	2.95		Figure 5.64 and Figure 5.65
		Vdet2	3.05	3.15	3.25		
Internal reset time		t_{POR}	20	35	50	ms	
Min. VCC down time*1		t_{VOFF}	200	—	—	μs	Figure 5.64 and Figure 5.65
Reply delay time		tdet	—	—	200	μs	

Note 1. The power-off time indicates the time when VCC is below the minimum value of voltage detection levels V_{POR}, Vdet1, and Vdet2 for the POR/ LVD.

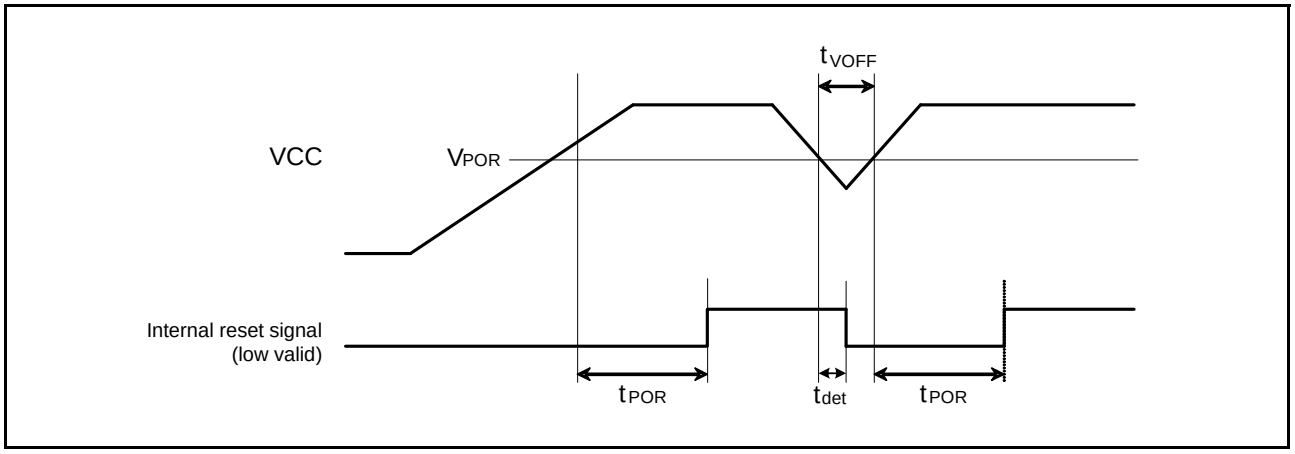

Figure 5.63 Power-on Reset Timing

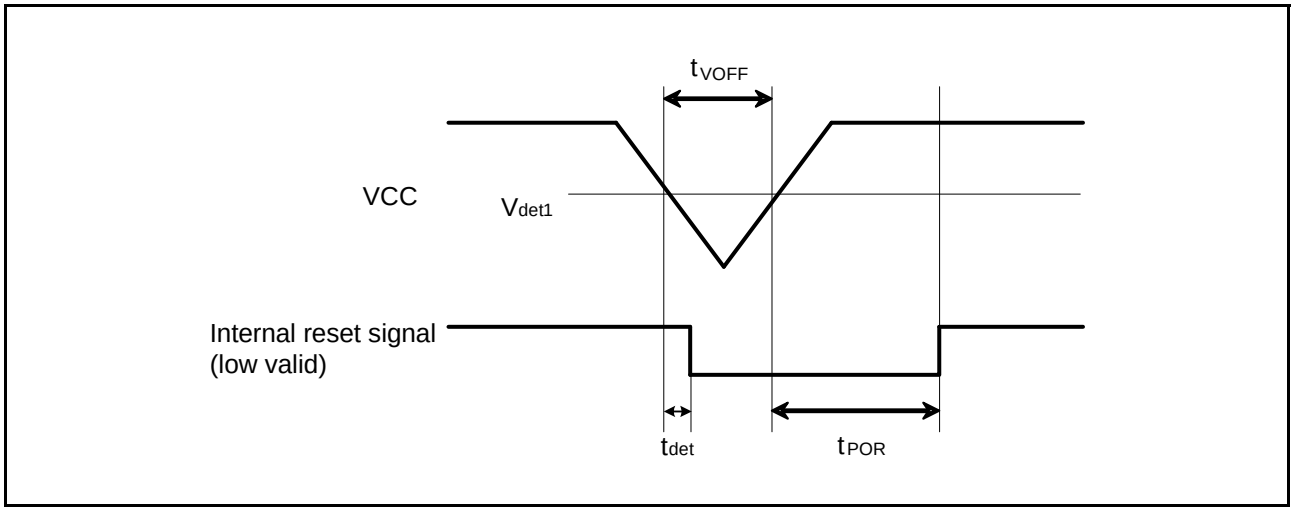

Figure 5.64 Voltage Detection Circuit Timing (Vdet1)

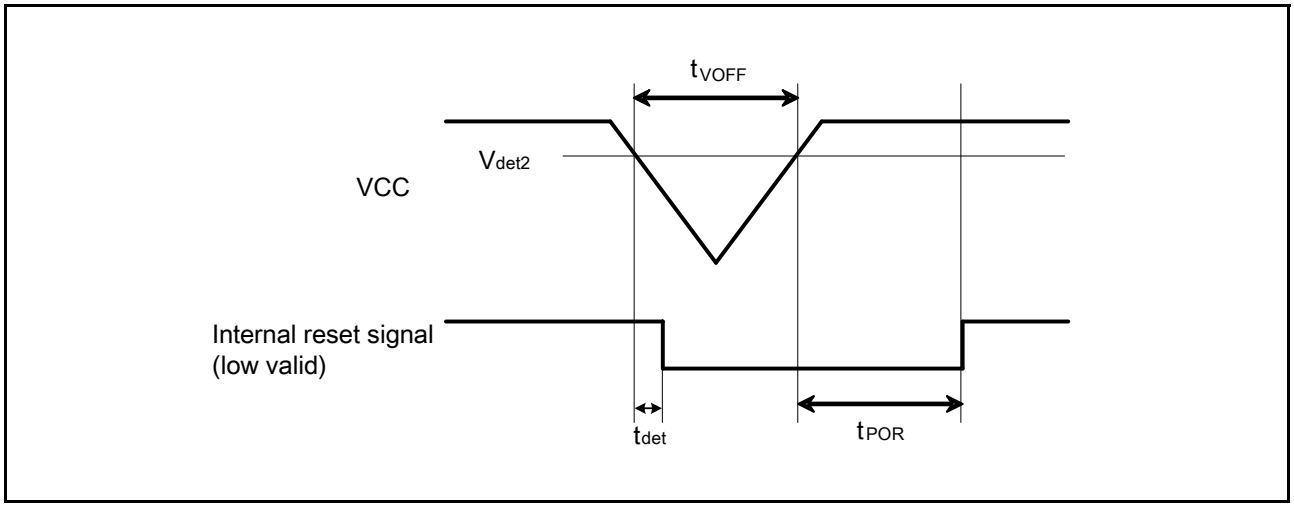

Figure 5.65 Voltage Detection Circuit Timing (Vdet2)

5.8 Oscillation Stop Detection Timing

Table 5.24 Oscillation Stop Detection Circuit Characteristics

Conditions: VCC = PLLVCC = AVCC = VCC_USB = 2.7 to 3.6 V, VREFH = 2.7 V to AVCC
VSS = PLLVSS = AVSS = VREFL = VSS_USB = 0 V
T_a = -40 to +85°C

Item	Symbol	Min.	Typ.	Max.	Unit	Test Conditions
Detection time	tdr	—	—	1.0	ms	Figure 5.66
Internal oscillation frequency when oscillation stop is detected	f_{MAIN}	0.5	—	7.0	MHz	

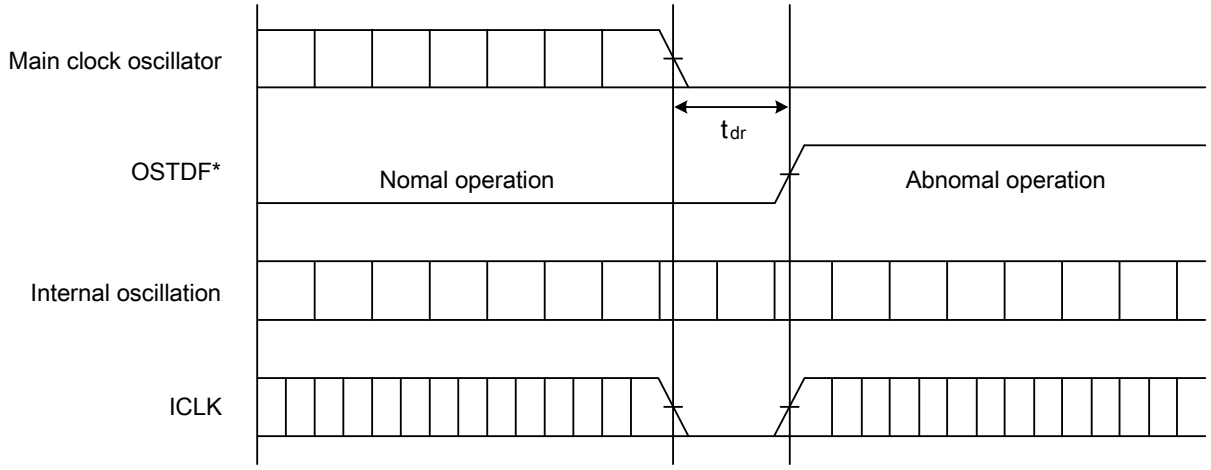

Note : * This indicates the OSTDF flag in the oscillation detection control register (OSTDCR).

Figure 5.66 Oscillation Stop Detection Timing

5.9 ROM (Flash Memory for Code Storage) Characteristics

Table 5.25 ROM (Flash Memory for Code Storage) Characteristics (1)

Conditions: VCC = PLLVCC = AVCC = VCC_USB = 2.7 to 3.6 V, VREFH = 2.7 V to AVCC
VSS = PLLVSS = AVSS = VREFL = VSS_USB = 0 V
Temperature range for the programming/erasure operation: T_a = -40 to +85°C

Item	Symbol	Min.	Typ.	Max.	Unit	Test Conditions
Rewrite/erase cycle*1	N_{PEC}	1000	—	—	Times	
Data hold time	t_{DRP}	30*2	—	—	Year	T_a = +85°C

Note 1. Definition of reprogram/erase cycle:
The reprogram/erase cycle is the number of erasing for each block. When the reprogram/erase cycle is n times (n = 1000), erasing can be performed n times for each block. For instance, when 256-byte programming is performed 16 times for different addresses in 4-Kbyte block and then the entire block is erased, the reprogram/erase cycle is counted as one. However, programming the same address for several times as one erasing is not enabled (overwriting is prohibited).
Note 2. The result obtained from the reliability test.

Table 5.26 ROM (Flash Memory for Code Storage) Characteristics (2)

Conditions: VCC = PLLVCC = AVCC = VCC_USB = 2.7 to 3.6 V, VREFH = 2.7 V to AVCC
VSS = PLLVSS = AVSS = VREFL = VSS_USB = 0 V
Temperature range for the programming/erasure operation: T_a = -40 to +85°C

Item		Symbol	Min.	Typ.	Max.	Unit	Test Conditions
Programming time	256 bytes	t_{P256}	—	2	12	ms	PCLK = 50 MHz N_{PEC} ≤ 100
	4 Kbytes	t_{P4K}	—	23	50	ms	
	16 Kbytes	t_{P16K}	—	90	200	ms	
	256 byte	t_{P256}	—	2.4	14.4	ms	PCLK = 50 MHz N_{PEC} > 100
	4 Kbytes	t_{P4K}	—	27.6	60	ms	
	16 Kbytes	t_{P16K}	—	108	240	ms	
Erasure time	4 Kbytes	t_{E4K}	—	25	60	ms	PCLK = 50 MHz N_{PEC} ≤ 100
	16 Kbytes	t_{E16K}	—	100	240	ms	
	4 Kbytes	t_{E4K}	—	30	72	ms	PCLK = 50 MHz N_{PEC} > 100
	16 Kbytes	t_{E16K}	—	120	288	ms	
Suspend delay time during writing		t_{SPD}	—	—	120	μs	Figure 5.67 PCLK = 50-MHz operation
First suspend delay time during erasing (in suspend priority mode)		t_{SESD1}	—	—	120	μs	
Second suspend delay time during erasing (in suspend priority mode)		t_{SESD2}	—	—	1.7	ms	
Suspend delay time during erasing (in erasure priority mode)		t_{SEED}	—	—	1.7	ms	

5.10 Data Flash (Flash Memory for Data Storage) Characteristics

Table 5.27 Data Flash (Flash Memory for Data Storage) Characteristics

Conditions: VCC = PLLVCC = AVCC = VCC_USB = 2.7 to 3.6 V, VREFH = 2.7 V to AVCC
VSS = PLLVSS = AVSS = VREFL = VSS_USB = 0 V
Temperature range for the programming/erasure operation: T_a = -40 to +85°C

Item		Symbol	Min.	Typ.	Max.	Unit	Test Conditions
Programming time	8 bytes	t_{DP8}	—	0.4	2	ms	PCLK = 50-MHz operation
	128 bytes	t_{DP128}	—	1	5	ms	
Erasure time	2 Kbytes	t_{DE2K}	—	70	250	ms	PCLK = 50-MHz operation
Blank check time	8 bytes	t_{DBC8}	—	—	30	μs	PCLK = 50-MHz operation
	2 Kbytes	t_{DBC2K}	—	—	0.7	ms	
Rewrite/erase cycle*1		N_{DPEC}	30000*2	—	—	Times	
Suspend delay time during writing		t_{DSPD}	—	—	120	μs	Figure 5.67 PCLK = 50-MHz operation
First suspend delay time during erasing (in suspend priority mode)		t_{DSESD1}	—	—	120	μs	
Second suspend delay time during erasing (in suspend priority mode)		t_{DSESD2}	—	—	1.7	ms	
Suspend delay time during erasing (in erasure priority mode)		t_{DSEED}	—	—	1.7	ms	
Data hold time*3		t_{DDRP}	10	—	—	Year	

Note 1. Definition of rewrite/erase cycle:
The rewrite/erase cycle is the number of erasing for each block. When the rewrite/erase cycle is n times (n = 30000), erasing can be performed n times for each block. For instance, when 128-byte writing is performed 16 times for different addresses in 2-Kbyte block and then the entire block is erased, the rewrite/erase cycle is counted as one. However, writing to the same address for several times as one erasing is not enabled (over writing is prohibited).

Note 2. This indicates the minimum number that guarantees the characteristics after rewriting. (The guaranteed value is in the range from one to the minimum number.)

Note 3. This indicates the characteristic when rewrite is performed within the specification range including the minimum number.

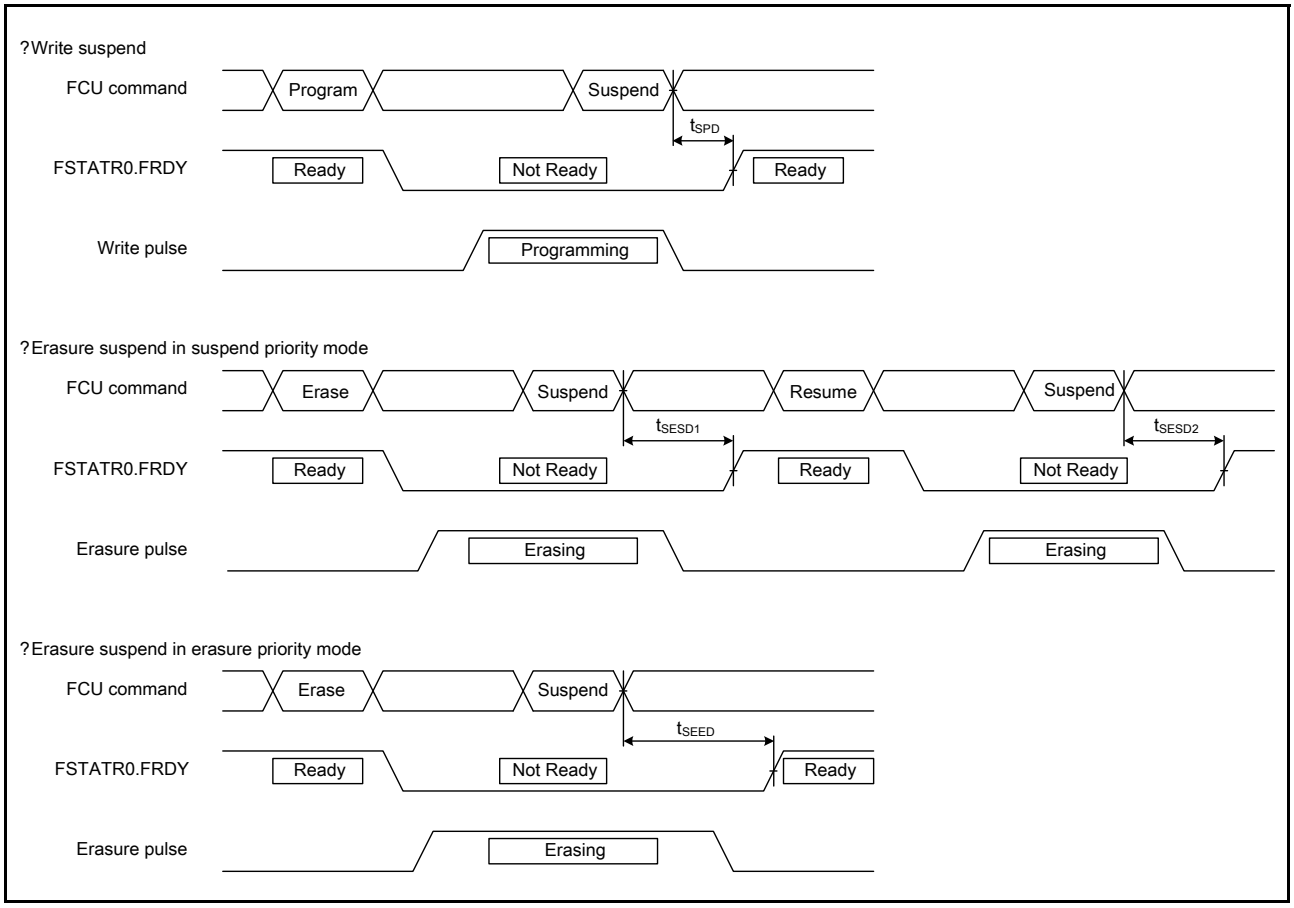

Figure 5.67 Flash Memory Write/Erase Suspend Timing

Appendix 1. Package Dimensions

Information on the latest version of the package dimensions or mountings has been displayed in "Packages" on Renesas Electronics Corp website.

JEITA Package Code	RENESAS Code	Previous Code	MASS[Typ.]
P-LFBGA176-13x13-0.80	PLBG0176GA-A	BP-176/BP-176V	0.45g

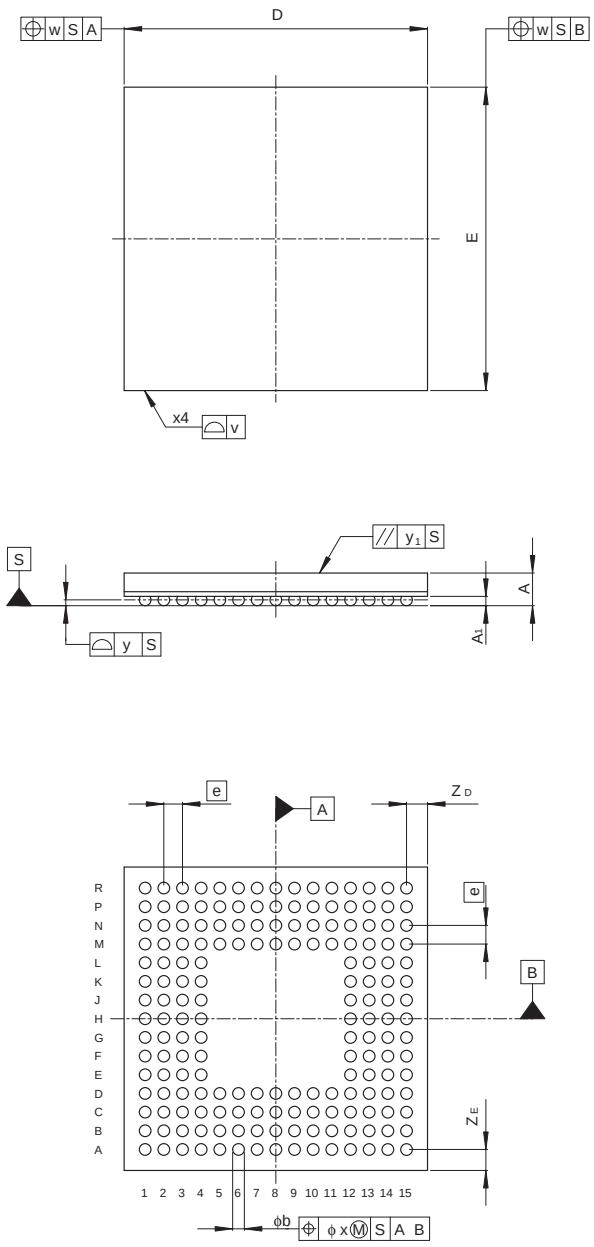

Reference Symbol	Dimension in Millimeters		
	Min	Nom	Max
D	—	13.0	—
E	—	13.0	—
v	—	—	0.15
w	—	—	0.20
A	—	—	1.40
A_1	0.35	0.40	0.45
e	—	0.80	—
b	0.45	0.50	0.55
x	—	—	0.08
y	—	—	0.10
y_1	—	—	0.2
S_D	—	—	—
S_E	—	—	—
Z_D	—	0.90	—
Z_E	—	0.90	—

Figure A 176-Pin LFBGA (PLBG0176GA-A) Package Dimensions

JEITA Package Code	RENESAS Code	Previous Code	MASS[Typ.]
P-TFLGA145-9x9-0.65	PTLG0145JB-A	-	0.15g

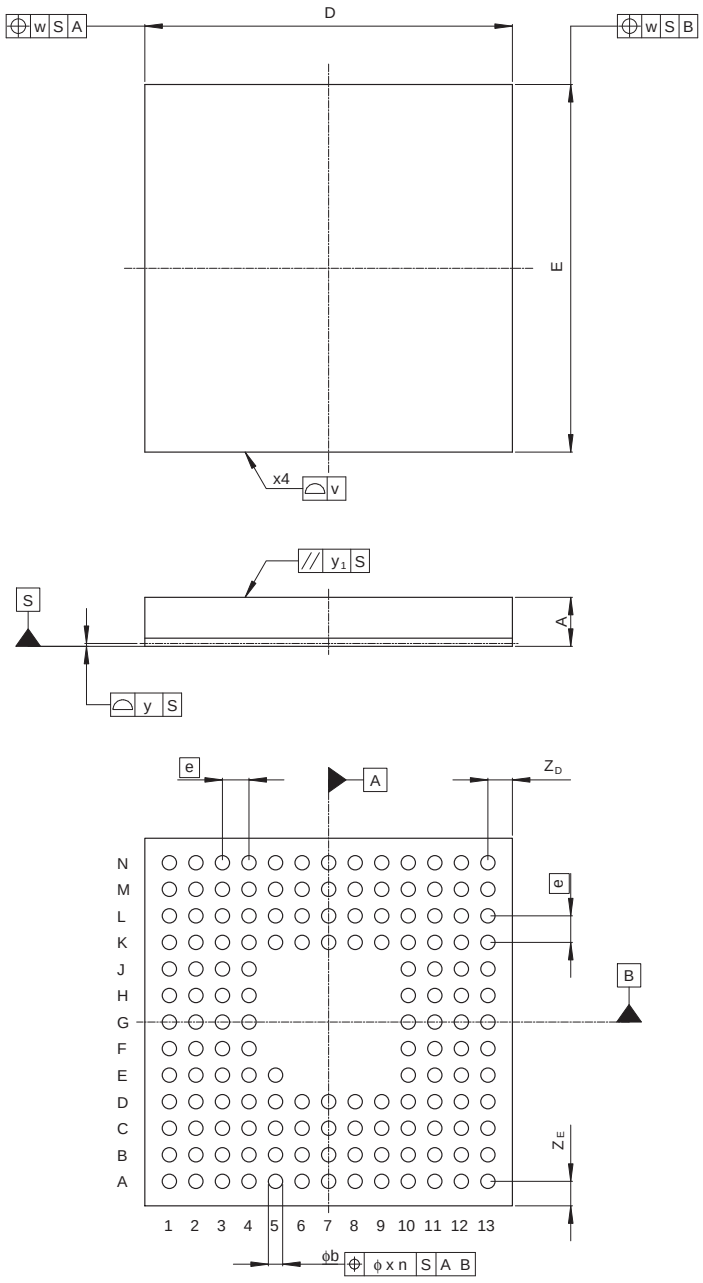

Reference Symbol	Dimension in Millimeters		
	Min	Nom	Max
D	—	9.0	—
E	—	9.0	—
v	—	—	0.15
w	—	—	0.20
A	—	—	1.2
A_1	—	—	—
e	—	0.65	—
b	0.30	0.35	0.40
x	—	—	0.08
y	—	—	0.1
y_1	—	—	0.20
S_D	—	—	—
S_E	—	—	—
Z_D	—	0.6	—
Z_E	—	0.6	—

Figure B 145-Pin TFLGA (PTLG0145JB-A) Package Dimensions

JEITA Package Code	RENESAS Code	Previous Code	MASS[Typ.]
P-LFQFP144-20x20-0.50	PLQP0144KA-A	144P6Q-A / FP-144L / FP-144LV	1.2g

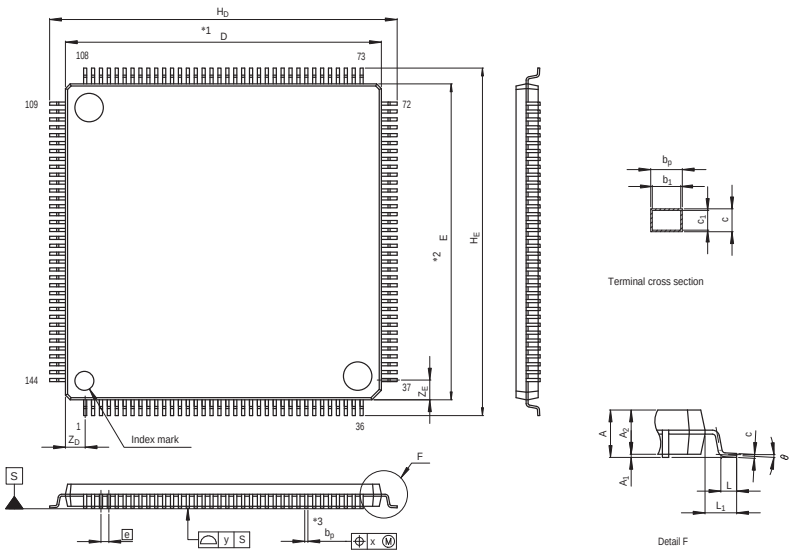

NOTE)
1. DIMENSIONS "*1" AND "*2" DO NOT INCLUDE MOLD FLASH.
2. DIMENSION "*3" DOES NOT INCLUDE TRIM OFFSET.

Reference Symbol	Dimension in Millimeters		
	Min	Nom	Max
D	19.9	20.0	20.1
E	19.9	20.0	20.1
A_2	—	1.4	—
H_D	21.8	22.0	22.2
H_E	21.8	22.0	22.2
A	—	—	1.7
A_1	0.05	0.1	0.15
b_p	0.17	0.22	0.27
b_1	—	0.20	—
c	0.09	0.145	0.20
c_1	—	0.125	—
θ	0°	—	8°
e	—	0.5	—
x	—	—	0.08
y	—	—	0.10
Z_D	—	1.25	—
Z_E	—	1.25	—
L	0.35	0.5	0.65
L_1	—	1.0	—

Figure C 144-Pin LQFP (PLQP0144KA-A) Package Dimensions

JEITA Package Code	RENESAS Code	Previous Code	MASS[Typ.]
P-LFQFP100-14x14-0.50	PLQP0100KB-A	100P6Q-A / FP-100U / FP-100UV	0.6g

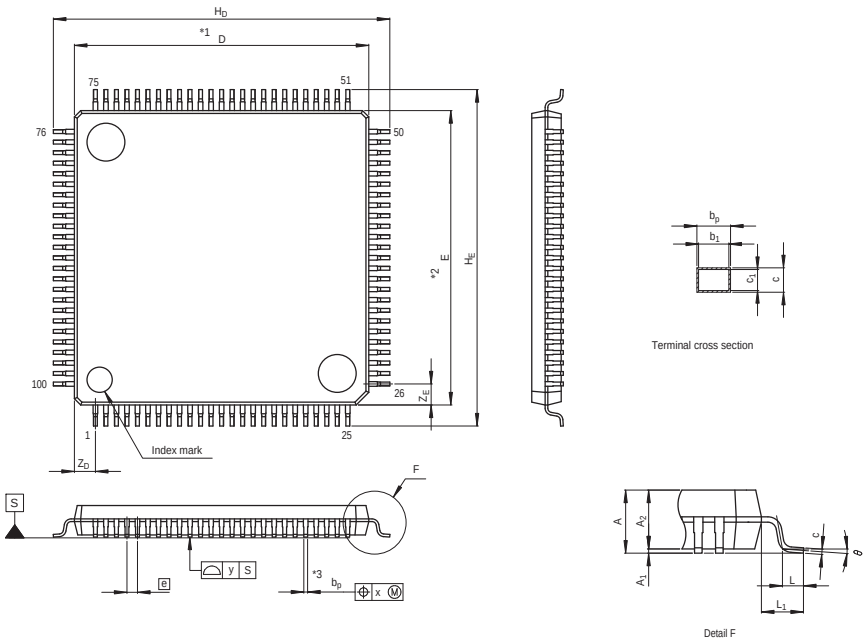

NOTE)
1. DIMENSIONS "*1" AND "*2" DO NOT INCLUDE MOLD FLASH.
2. DIMENSION "*3" DOES NOT INCLUDE TRIM OFFSET.

Reference Symbol	Dimension in Millimeters		
	Min	Nom	Max
D	13.9	14.0	14.1
E	13.9	14.0	14.1
A_2	—	1.4	—
H_D	15.8	16.0	16.2
H_E	15.8	16.0	16.2
A	—	—	1.7
A_1	0.05	0.1	0.15
b_p	0.15	0.20	0.25
b_1	—	0.18	—
c	0.09	0.145	0.20
c_1	—	0.125	—
θ	0°	—	8°
e	—	0.5	—
x	—	—	0.08
y	—	—	0.08
Z_D	—	1.0	—
Z_E	—	1.0	—
L	0.35	0.5	0.65
L_1	—	1.0	—

Figure D 100-Pin LQFP (PLQP0100KB-A) Package Dimensions

JEITA Package Code	RENESAS Code	Previous Code	MASS[Typ.]
P-TFLGA85-7x7-0.65	PTLG0085JA-A	TLP-85V	0.1g

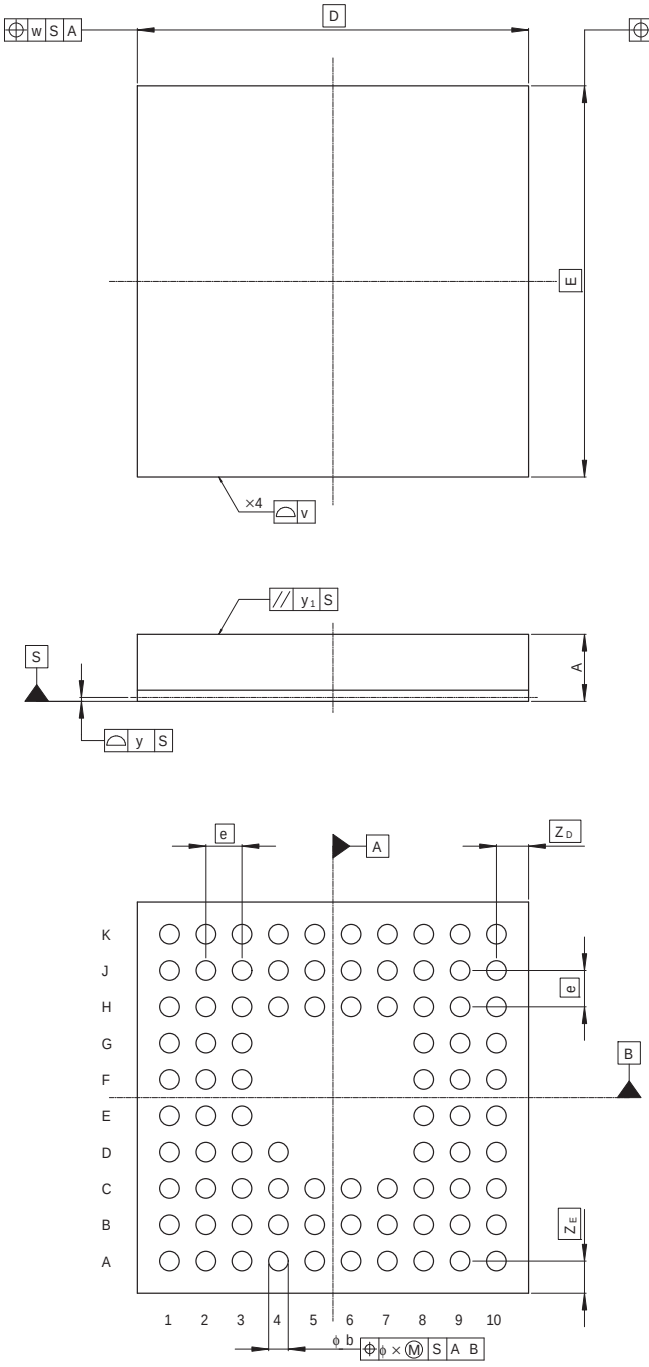

Reference Symbol	Dimension in Millimeters		
	Min	Nom	Max
D	—	7.0	—
E	—	7.0	—
v	—	—	0.15
w	—	—	0.20
A	—	—	1.20
A_1	—	—	—
e	—	0.65	—
b	0.30	0.35	0.40
x	—	—	0.08
y	—	—	0.10
y_1	—	—	0.2
S_D	—	—	—
S_E	—	—	—
Z_D	—	0.575	—
Z_E	—	0.575	—

Figure E 85-Pin TFLGA (PTLG0085JA-A) Package Dimensions

REVISION HISTORY	RX62N Group, RX621 Group Datasheet

Rev.	Date	Description	
		Page	Summary
1.00	2011.02.04	—	First Edition issued
1.10	2011.02.10	—	Features reviewed
1.20	2011.06.10		1. Overview
		2 to 5	Table 1.1 Outline of Specification, Description changed
		40 to 46	Table 1.9 Pin Functions, Description changed
			4. I/O Registers
		52 to 86	Table 4.1 List of I/O Registers (Address Order), Description changed
			5. Electrical Characteristics
		90	Table 5.2 DC Characteristics (3) , changed
		111	Figure 5.23 EDACK0 and EDACK1 Single-Address Transfer Timing (for a CS Area), changed
		111	Figure 5.24 EDACK0 and EDACK1 Single-Address Transfer Timing (for SDRAM), changed
1.30	2012.01.11		1. Overview
		2	Table 1.1 Outline of Specifications (1/4), changed, note 1, note 2 deleted
		13	Figure 1.6 Pin Assignment of the 144-Pin LQFP (Assistance Diagram), changed
		15	Figure 1.8 Pin Assignment of the 100-Pin LQFP (Assistance Diagram), changed
		33	Table 1.7 List of Pins and Pin Functions (100-Pin LQFP) (1/4), changed
		37	Table 1.8 List of Pins and Pin Functions (85-Pin TFLGA) (2/3), changed
			4. I/O Registers
		52 to 87	Table 4.1 List of I/O Registers (Address Order), Description changed
			5. Electrical Characteristics
		91	Table 5.4 DC Characteristics (3), specification added
		98	Table 5.9 Control Signal Timing, note changed
		122	Table 5.18 Timing of On-Chip Peripheral Modules (6), conditions changed

Classifications
- Items with Technical Update document number: Changes according to the corresponding issued Technical Update
- Items without Technical Update document number: Minor changes that do not require Technical Update to be issued

Rev.	Date	Description		Classification
		Page	Summary	
1.40	Jul 16, 2014	4. I/O Registers		
		69, 70	Table 5.1 List of I/O Registers (Address Order), changed	TN-RX*-A012A/E
		5. Electrical Characteristics		
		91	Table 5.4 DC Characteristics (3), Note 1, changed	
		101 to 104	Figure 5.10 External Bus Timing/Normal Read Cycle (Bus Clock Synchronized) to Figure 5.14 External Bus Timing/External Wait Control, changed	
		114	Table 5.13 Timing of On-Chip Peripheral Modules (2): SCI changed	
		140	Table 5.25 ROM (Flash Memory for Code Storage) Characteristics (1), Note 2, changed, Note 3, deleted, Table 5.26 ROM (Flash Memory for Code Storage) Characteristics (2), added	TN-RX*-A051A/E
		Appendix 2. Package Dimensions		
		145	Figure C 144-Pin LQFP (PLQP0144KA-A) Package Dimensions, Figure D 100-Pin LQFP (PLQP0100KB-A) Package Dimensions, changed	

All trademarks and registered trademarks are the property of their respective owners.

General Precautions in the Handling of MPU/MCU Products

The following usage notes are applicable to all MPU/MCU products from Renesas. For detailed usage notes on the products covered by this document, refer to the relevant sections of the document as well as any technical updates that have been issued for the products.

1. Handling of Unused Pins

   Handle unused pins in accord with the directions given under Handling of Unused Pins in the manual.

   — The input pins of CMOS products are generally in the high-impedance state. In operation with an unused pin in the open-circuit state, extra electromagnetic noise is induced in the vicinity of LSI, an associated shoot-through current flows internally, and malfunctions occur due to the false recognition of the pin state as an input signal become possible. Unused pins should be handled as described under Handling of Unused Pins in the manual.

2. Processing at Power-on

   The state of the product is undefined at the moment when power is supplied.

   — The states of internal circuits in the LSI are indeterminate and the states of register settings and pins are undefined at the moment when power is supplied.
   In a finished product where the reset signal is applied to the external reset pin, the states of pins are not guaranteed from the moment when power is supplied until the reset process is completed.
   In a similar way, the states of pins in a product that is reset by an on-chip power-on reset function are not guaranteed from the moment when power is supplied until the power reaches the level at which resetting has been specified.

3. Prohibition of Access to Reserved Addresses

   Access to reserved addresses is prohibited.

   — The reserved addresses are provided for the possible future expansion of functions. Do not access these addresses; the correct operation of LSI is not guaranteed if they are accessed.

4. Clock Signals

   After applying a reset, only release the reset line after the operating clock signal has become stable. When switching the clock signal during program execution, wait until the target clock signal has stabilized.

   — When the clock signal is generated with an external resonator (or from an external oscillator) during a reset, ensure that the reset line is only released after full stabilization of the clock signal. Moreover, when switching to a clock signal produced with an external resonator (or by an external oscillator) while program execution is in progress, wait until the target clock signal is stable.

5. Differences between Products

   Before changing from one product to another, i.e. to a product with a different part number, confirm that the change will not lead to problems.

   — The characteristics of an MPU or MCU in the same group but having a different part number may differ in terms of the internal memory capacity, layout pattern, and other factors, which can affect the ranges of electrical characteristics, such as characteristic values, operating margins, immunity to noise, and amount of radiated noise. When changing to a product with a different part number, implement a system-evaluation test for the given product.

Notice

1. Descriptions of circuits, software and other related information in this document are provided only to illustrate the operation of semiconductor products and application examples. You are fully responsible for the incorporation of these circuits, software, and information in the design of your equipment. Renesas Electronics assumes no responsibility for any losses incurred by you or third parties arising from the use of these circuits, software, or information.
2. Renesas Electronics has used reasonable care in preparing the information included in this document, but Renesas Electronics does not warrant that such information is error free. Renesas Electronics assumes no liability whatsoever for any damages incurred by you resulting from errors in or omissions from the information included herein.
3. Renesas Electronics does not assume any liability for infringement of patents, copyrights, or other intellectual property rights of third parties by or arising from the use of Renesas Electronics products or technical information described in this document. No license, express, implied or otherwise, is granted hereby under any patents, copyrights or other intellectual property rights of Renesas Electronics or others.
4. You should not alter, modify, copy, or otherwise misappropriate any Renesas Electronics product, whether in whole or in part. Renesas Electronics assumes no responsibility for any losses incurred by you or third parties arising from such alteration, modification, copy or otherwise misappropriation of Renesas Electronics product.
5. Renesas Electronics products are classified according to the following two quality grades: "Standard" and "High Quality". The recommended applications for each Renesas Electronics product depends on the product's quality grade, as indicated below.
   "Standard": Computers; office equipment; communications equipment; test and measurement equipment; audio and visual equipment; home electronic appliances; machine tools; personal electronic equipment; and industrial robots etc.
   "High Quality": Transportation equipment (automobiles, trains, ships, etc.); traffic control systems; anti-disaster systems; anti-crime systems; and safety equipment etc.
   Renesas Electronics products are neither intended nor authorized for use in products or systems that may pose a direct threat to human life or bodily injury (artificial life support devices or systems, surgical implantations etc.), or may cause serious property damages (nuclear reactor control systems, military equipment etc.). You must check the quality grade of each Renesas Electronics product before using it in a particular application. You may not use any Renesas Electronics product for any application for which it is not intended. Renesas Electronics shall not be in any way liable for any damages or losses incurred by you or third parties arising from the use of any Renesas Electronics product for which the product is not intended by Renesas Electronics.
6. You should use the Renesas Electronics products described in this document within the range specified by Renesas Electronics, especially with respect to the maximum rating, operating supply voltage range, movement power voltage range, heat radiation characteristics, installation and other product characteristics. Renesas Electronics shall have no liability for malfunctions or damages arising out of the use of Renesas Electronics products beyond such specified ranges.
7. Although Renesas Electronics endeavors to improve the quality and reliability of its products, semiconductor products have specific characteristics such as the occurrence of failure at a certain rate and malfunctions under certain use conditions. Further, Renesas Electronics products are not subject to radiation resistance design. Please be sure to implement safety measures to guard them against the possibility of physical injury, and injury or damage caused by fire in the event of the failure of a Renesas Electronics product, such as safety design for hardware and software including but not limited to redundancy, fire control and malfunction prevention, appropriate treatment for aging degradation or any other appropriate measures. Because the evaluation of microcomputer software alone is very difficult, please evaluate the safety of the final products or systems manufactured by you.
8. Please contact a Renesas Electronics sales office for details as to environmental matters such as the environmental compatibility of each Renesas Electronics product. Please use Renesas Electronics products in compliance with all applicable laws and regulations that regulate the inclusion or use of controlled substances, including without limitation, the EU RoHS Directive. Renesas Electronics assumes no liability for damages or losses occurring as a result of your noncompliance with applicable laws and regulations.
9. Renesas Electronics products and technology may not be used for or incorporated into any products or systems whose manufacture, use, or sale is prohibited under any applicable domestic or foreign laws or regulations. You should not use Renesas Electronics products or technology described in this document for any purpose relating to military applications or use by the military, including but not limited to the development of weapons of mass destruction. When exporting the Renesas Electronics products or technology described in this document, you should comply with the applicable export control laws and regulations and follow the procedures required by such laws and regulations.
10. It is the responsibility of the buyer or distributor of Renesas Electronics products, who distributes, disposes of, or otherwise places the product with a third party, to notify such third party in advance of the contents and conditions set forth in this document, Renesas Electronics assumes no responsibility for any losses incurred by you or third parties as a result of unauthorized use of Renesas Electronics products.
11. This document may not be reproduced or duplicated in any form, in whole or in part, without prior written consent of Renesas Electronics.
12. Please contact a Renesas Electronics sales office if you have any questions regarding the information contained in this document or Renesas Electronics products, or if you have any other inquiries.

(Note 1) "Renesas Electronics" as used in this document means Renesas Electronics Corporation and also includes its majority-owned subsidiaries.

(Note 2) "Renesas Electronics product(s)" means any product developed or manufactured by or for Renesas Electronics.

SALES OFFICES Renesas Electronics Corporation http://www.renesas.com

Refer to "http://www.renesas.com/" for the latest and detailed information.

Renesas Electronics America Inc.
2801 Scott Boulevard Santa Clara, CA 95050-2549, U.S.A.
Tel: +1-408-588-6000, Fax: +1-408-588-6130

Renesas Electronics Canada Limited
1101 Nicholson Road, Newmarket, Ontario L3Y 9C3, Canada
Tel: +1-905-898-5441, Fax: +1-905-898-3220

Renesas Electronics Europe Limited
Dukes Meadow, Millboard Road, Bourne End, Buckinghamshire, SL8 5FH, U.K
Tel: +44-1628-585-100, Fax: +44-1628-585-900

Renesas Electronics Europe GmbH
Arcadiastrasse 10, 40472 Düsseldorf, Germany
Tel: +49-211-6503-0, Fax: +49-211-6503-1327

Renesas Electronics (China) Co., Ltd.
Room 1709, Quantum Plaza, No.27 ZhiChunLu Haidian District, Beijing 100191, P.R.China
Tel: +86-10-8235-1155, Fax: +86-10-8235-7679

Renesas Electronics (Shanghai) Co., Ltd.
Unit 301, Tower A, Central Towers, 555 Langao Road, Putuo District, Shanghai, P. R. China 200333
Tel: +86-21-2226-0888, Fax: +86-21-2226-0999

Renesas Electronics Hong Kong Limited
Unit 1601-1613, 16/F., Tower 2, Grand Century Place, 193 Prince Edward Road West, Mongkok, Kowloon, Hong Kong
Tel: +852-2265-6688, Fax: +852 2886-9022/9044

Renesas Electronics Taiwan Co., Ltd.
13F, No. 363, Fu Shing North Road, Taipei 10543, Taiwan
Tel: +886-2-8175-9600, Fax: +886 2-8175-9670

Renesas Electronics Singapore Pte. Ltd.
80 Bendemeer Road, Unit #06-02 Hyflux Innovation Centre, Singapore 339949
Tel: +65-6213-0200, Fax: +65-6213-0300

Renesas Electronics Malaysia Sdn.Bhd.
Unit 906, Block B, Menara Amcorp, Amcorp Trade Centre, No. 18, Jln Persiaran Barat, 46050 Petaling Jaya, Selangor Darul Ehsan, Malaysia
Tel: +60-3-7955-9390, Fax: +60-3-7955-9510

Renesas Electronics Korea Co., Ltd.
12F., 234 Teheran-ro, Gangnam-Ku, Seoul, 135-920, Korea
Tel: +82-2-558-3737, Fax: +82-2-558-5141

© 2014 Renesas Electronics Corporation. All rights reserved.
Colophon 4.0

Mouser Electronics

Authorized Distributor

Click to View Pricing, Inventory, Delivery & Lifecycle Information:

Renesas Electronics:

R5F56218BDBG#U0 R5F562N7ADLE#U0 R5F56217BDLD#U0 R5F562N8ADFP#V0 R5F562N7BDLE#U0 R5F562N8BDFB#V0 R5F562N8BDLE#U0 R5F56218BDFP#V0 R5F562N7BDBG#U0 R5F56217BDFP#V0 R5F562N7BDFB#V0 R5F56217BDBG#U0 R5F562N8BDFP#V0 R5F562N8BDBG#U0 R5F56216BDFP#V0 R5F562N7ADBG#U0 R5F562N7BDFP#V0 R5F562N8ADBG#U0 R5F562N8ADLE#U0 R5F56218BDLD#U0 R5F56218BDLE#U0 R5F56217BDLE#U0 R5F562N7ADFP#V0 R5F56216BDBG#U0 R5F56216BDLE#U0 R5F56217BDFB#V0 R5F562N8ADFB#V0 R5F56216BDLD#U0 R5F56218BDFB#V0 R5F562N7ADFB#V0 R5F56216BDFB#V0

OCEAN CHIPS
Океан Электроники
Поставка электронных компонентов

Компания «Океан Электроники» предлагает заключение долгосрочных отношений при поставках импортных электронных компонентов на взаимовыгодных условиях!

Наши преимущества:

- Поставка оригинальных импортных электронных компонентов напрямую с производств Америки, Европы и Азии, а так же с крупнейших складов мира;
- Широкая линейка поставок активных и пассивных импортных электронных компонентов (более 30 млн. наименований);
- Поставка сложных, дефицитных, либо снятых с производства позиций;
- Оперативные сроки поставки под заказ (от 5 рабочих дней);
- Экспресс доставка в любую точку России;
- Помощь Конструкторского Отдела и консультации квалифицированных инженеров;
- Техническая поддержка проекта, помощь в подборе аналогов, поставка прототипов;
- Поставка электронных компонентов под контролем ВП;
- Система менеджмента качества сертифицирована по Международному стандарту ISO 9001;
- При необходимости вся продукция военного и аэрокосмического назначения проходит испытания и сертификацию в лаборатории (по согласованию с заказчиком);
- Поставка специализированных компонентов военного и аэрокосмического уровня качества (Xilinx, Altera, Analog Devices, Intersil, Interpoint, Microsemi, Actel, Aeroflex, Peregrine, VPT, Syfer, Eurofarad, Texas Instruments, MS Kennedy, Miteq, Cobham, E2V, MA-COM, Hittite, Mini-Circuits, General Dynamics и др.);

Компания «Океан Электроники» является официальным дистрибьютором и эксклюзивным представителем в России одного из крупнейших производителей разъемов военного и аэрокосмического назначения **«JONHON»**, а так же официальным дистрибьютором и эксклюзивным представителем в России производителя высокотехнологичных и надежных решений для передачи СВЧ сигналов **«FORSTAR»**.

AVIC JONHON

«JONHON» (основан в 1970 г.)

Разъемы специального, военного и аэрокосмического назначения:

(Применяются в военной, авиационной, аэрокосмической, морской, железнодорожной, горно- и нефтедобывающей отраслях промышленности)

«FORSTAR» (основан в 1998 г.)

ВЧ соединители, коаксиальные кабели, кабельные сборки и микроволновые компоненты:

(Применяются в телекоммуникациях гражданского и специального назначения, в средствах связи, РЛС, а так же военной, авиационной и аэрокосмической отраслях промышленности).

FORSTAR®

Телефон: 8 (812) 309-75-97 (многоканальный)
Факс: 8 (812) 320-03-32
Электронная почта: ocean@oceanchips.ru
Web: http://oceanchips.ru/
Адрес: 198099, г. Санкт-Петербург, ул. Калинина, д. 2, корп. 4, лит. А