T540/T541 High Reliability Series (HRA) Polymer Electrolytic, 2.5 – 63 VDC

Electronic Components KEMET CHARGED.

KO-CAP Polymer Capacitors

Overview

The KEMET Organic Capacitor (KO-CAP) is a solid electrolytic capacitor with a conductive polymer cathode capable of delivering very low ESR and improved capacitance retention at high frequencies. KO-CAP combines the low ESR of multilayer ceramic, the high capacitance of aluminum electrolytic, and the volumetric efficiency of tantalum into a single surface mount package. Unlike liquid electrolyte-based capacitors, KO-CAP has a very long operational life and high ripple current capabilities.

The HRA Polymer Electrolytic offers the same performance advantages as other KO-CAP series with screening options associated with high reliability (Hi-Rel) applications. These HRA grade components offer several surge current screening options. The recommended application derating for these capacitors is 10 – 20%, rendering them suitable for application voltages from 2.5 to 63 VDC.

These are the first polymer electrolytic capacitors available with failure rate options as defined by KEMET's KO-CAP Reliability Assessment method. This method utilizes accelerated conditions (voltage and temperature) applied to board-mounted samples to assess long term device reliability. The failure rates available are B (0.1% per 1,000 hours), C (0.01% per 1,000 hours), and D (0.001% per 1,000 hours). The KO-CAP Reliability Assessment method was developed as a result of over 10 years of research and is described in numerous papers available on www.kemet.com.

Benefits

- Approved for DLA Drawing 04051/04052
- B, C, and D failure rates available
- 100% accelerated steady state aging
- High frequency capacitance retention
- Improved humidity capability 85°C/85% RH, 1.0 V_R (in black color epoxy) available
- Very low ESR values down to 5 mΩ
- Surge current testing options
- Volumetrically efficient
- EIA standard case sizes
- KEMET's KO-CAP Reliability Assessment method

© KEMET Electronics Corporation • KEMET Tower • One East Broward Boulevard
Fort Lauderdale, FL 33301 USA • 954-766-2800 • www.kemet.com

Applications

Typical applications include decoupling , filtering and hold-up in defense and aerospace applications that require low ESR or a benign failure mode.
When extreme temperatures and humidity are taken into account, polymer capacitors offer a number of advantages over other types of capacitors. KEMET continues to investigate the behavior of polymer capacitors in extreme conditions. If you have questions about using these capacitors in a specific environment or application, we suggest you contact your local KEMET representative or Field Application Engineer. You may also refer to “Considerations for Polymer Capacitors in Extreme Environments” located at www.kemet.com/ExtremePolymerPaper.

Environmental Compliance

RoHS Compliant (6/6) according to Directive 2002/95/EC when ordered with 100% Sn solder. Halogen Free.

K-SIM

For a detailed analysis of specific part numbers, please visit ksim.kemet.com to access KEMET's K-SIM software. KEMET K-SIM is designed to simulate behavior of components with respect to frequency, ambient temperature, and DC bias levels.

Ordering Information

T	541	D	157	M	10	A	H	65	10	
Capacitor Class	Series	Case Size	Capacitance Code (pF)	Capacitance Tolerance	Rated Voltage (VDC)	Failure Rate/ Design	Termination Finish	Surge Option	ESR	Packaging (C-Spec)
T = Tantalum	540 = Polymer COTS 541 = Polymer COTS Multiple Anode	A, B, C, D, O, X, Y	First two digits represent significant figures. Third digit specifies number of zeros.	K = ± 10% M = ±20%	2R5 = 2.5 003 = 3 004 = 4 006 = 6.3 010 = 10 016 = 16 020= 20 025 = 25 035 = 35 050 = 50 063 = 63	A = N/A B* = 0.1%/KHrs C* = 0.01%/KHrs D*= 0.001%/KHrs	H = Standard solder coated (SnPb 5% Pb minimum) T = 100% Matte Tin (Sn)-plated	65 = 4 cycles at 25°C ±5°C** 66 = 10 cycles at 25°C ±5°C*** 67 = 10 cycles at -55°C +0°C/-5°C and +85°C ±5°C*** 85 = 4 cycles at 25°C ±5°C ** and improved humidity capability 86 = 10 cycles at 25°C ±5°C*** and improved humidity capability 87= 10 cycles at −55°C +0°C/−5°C and +85°C ±5°C*** and improved humidity capability	05 = ESR - High 10 = ESR - Standard 20 = ESR - Low 30* = ESR - Ultra Low ESR	Blank = 7" Reel 7280 = 13" Reel 7610 = Bulk Bag 7640 = Bulk plastic box WAFL = Waffle Pack

** Select part numbers,*
*** Before voltage aging,*
**** After voltage aging*

Ordering Information – DLA Drawing

04052-	002	A
Drawing Number	Dash Number	Surge Current Option
04052 04051	See Part Number List	Blank = 4 cycles +25°C ±5°C Before Voltage Aging A = 10 cycles +25°C ±5°C After Voltage Aging B = 10 cycles −55°C +0°C/−5°C and +85°C ±5°C After Voltage Aging

Performance Characteristics

Item	Performance Characteristics
Operating Temperature	−55°C to 125°C *
Rated Capacitance Range	4.7 – 1,500 µF at 120 Hz/25°C
Capacitance Tolerance	K Tolerance (10%), M Tolerance (20%)
Rated Voltage Range	2.5 – 63 V
DF (120 Hz)	≤ 10%
ESR (100 kHz)	Refer to Part Number Electrical Specification Table
Leakage Current	≤ 0.1 CV (µA) at rated voltage after 5 minutes

** KEMET's Polymer COTS (T540/T541 Series) capacitors are rated for operation between −55°C and +125°C. Parametric electrical performance remains within stated specification limits after 1,000 hours of continuous operation and/or storage at +125°C. Long-term duty cycles or storage at or above +125°C may result in an increase in ESR performance outside of the stated specification limits.*

Qualification

Test	Condition	Characteristics			
Endurance	105°C at rated voltage, 2,000 hours 125°C at 2/3 rated voltage, 2,000 hours	Δ C/C	Within −20/+10% of initial value		
		DF	≤ initial limit		
		DCL **	1.25 x IL at 125°C		
		ESR	2 x IL (105°C); 5 x IL (125°C)		
Storage Life	125°C at 0 volts, 2,000 hours	Δ C/C	Within −20/+10% of initial value		
		DF	Within initial limits		
		DCL **	Within 2.0 x initial limit		
		ESR	Within 5.0 x initial limit		
Humidity	60°C, 90% RH, 500 hours, rated voltage 60°C, 90% RH, 500 hours, no load 85°C, 85% RH, 1,000 hours, rated voltage ***	Δ C/C	Within −5%/+35% of initial value		
		DF	≤ initial limit Within 1.5 x IL ***		
		DCL	Within 3.0 x initial limit		
Temperature Stability	Extreme temperature exposure at a succession of continuous steps at +25°C, −55°C, +25°C, +85°C, +125°C, +25°C		+25°C	−55°C	+85°C (1)	+125°C (2)
		Δ C/C	±5%	±10%	±20%	±30%
		DF	IL	IL	1.2 x IL	1.5 x IL
		DCL	IL	N/A	10 x IL	10 x IL
Surge Voltage	105°C, 1.32 x rated voltage, 33 Ω resistance, 1,000 cycles	Δ C/C	Within −20/+5% of initial value		
		DF	Within initial limits		
		DCL	Within initial limits		
		ESR	Within initial limits		
Mechanical Shock/ Vibration	Mil-Std-202, Method 213, Condition I, 100 G peak Mil-Std-202, Method 204, Condition D, 10 Hz to 2,000 Hz, 20 G peak	Δ C/C	Within ±10% of initial value		
		DF	Within initial limits		
		DCL	Within initial limits		
Additional qualifcation testing per MIL-PRF-55365/8	Please contact KEMET for more information				

**IL = Initial limit*
*** The test voltage shall be maintained during the cool down from elevated test temperature to +25°C. After cool down, the capacitors shall be discharged for a minimum of 5 minutes. DC leakage measurements are allowed at this time.*
(1) ≥16V - ΔC/C = ±30%
(2) ≥16V - ΔC/C = ±40%
**** For Part Number with surge options 85, 86, and 87*

Certification

DLA Drawing 04051 & 04052

Electrical Characteristics

ESR vs. Frequency

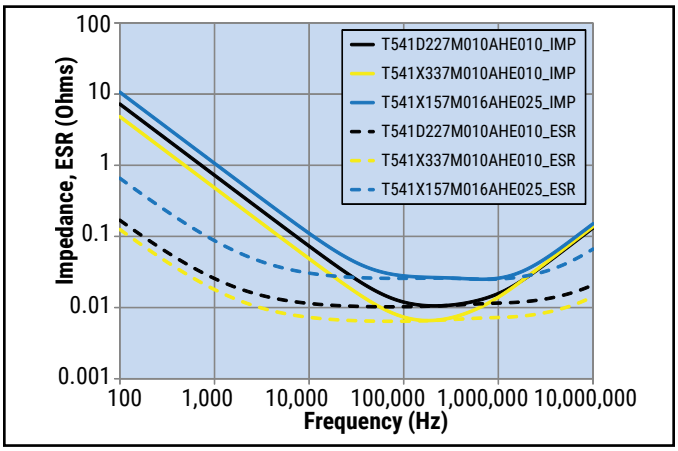

Capacitance vs. Frequency

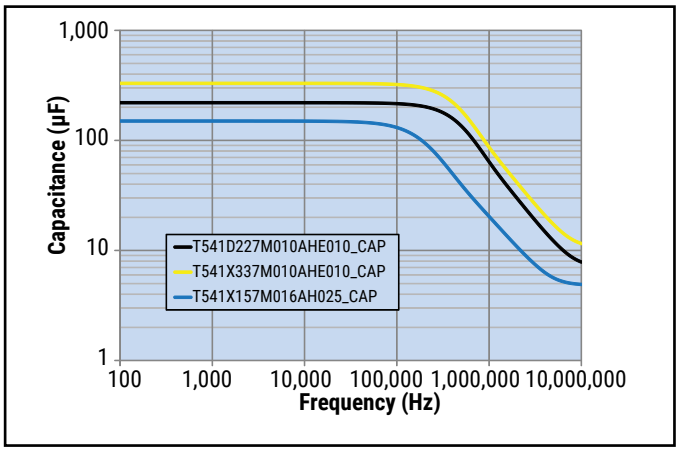

Dimensions – Millimeters (Inches)

Metric will govern

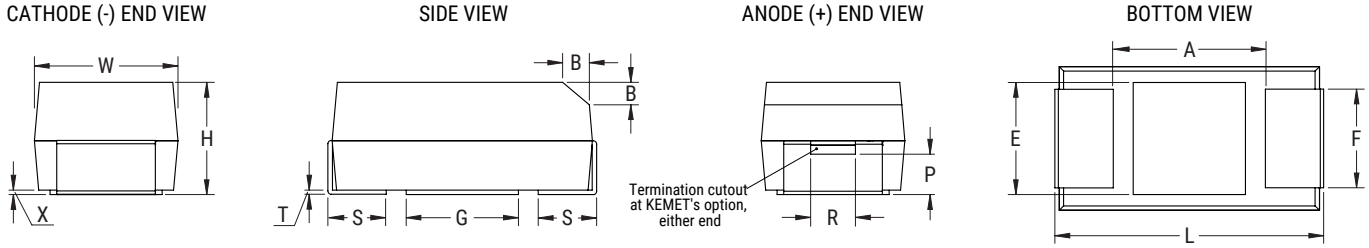

Case Size		Component Dimensions													Typical Weight
KEMET	EIA	L	W	H	F±0.1 ±(0.004)	S±0.3 ±(0.012)	B±0.15 (Ref)±0.006	X (Ref)	P (Ref)	R (Ref)	T (Ref)	A (Minimum)	G (Ref)	E (Ref)	(mg)
A	3216-18	3.2 ±0.2 (0.126 ±0.008)	1.6 ±0.2 (0.063 ±0.008)	1.6 ±0.2 (0.063 ±0.008)	1.2 (0.047)	0.8 (0.031)	0.4 (0.016)	0.10 ±0.10 (0.004 ±0.004)	0.4 (0.016)	0.4 (0.016)	0.13 (0.005)	1.2 (0.047)	1.1 (0.043)	1.3 (0.051)	53.17
B	3528-21	3.5 ±0.2 (0.138 ±0.008)	2.8 ±0.2 (0.110 ±0.008)	1.9 ±0.2 (0.075 ±0.008)	2.2 (0.087)	0.8 (0.031)	0.4 (0.016)	0.10 ±0.10 (0.004 ±0.004)	0.5 (0.020)	1.0 (0.039)	0.13 (0.005)	1.9 (0.075)	1.8 (0.071)	2.2 (0.087)	98.30
C	6032-28	6.0 ±0.3 (0.236 ±0.012)	3.2 ±0.3 (0.126 ±0.012)	2.5 ±0.3 (0.098 ±0.012)	2.2 (0.087)	1.3 (0.051)	0.5 (0.020)	0.10 ±0.10 (0.004 ±0.004)	0.9 (0.035)	1.0 (0.039)	0.13 (0.005)	3.1 (0.122)	2.8 (0.110)	2.4 (0.095)	193.46
D	7343-31	7.3 ±0.3 (0.287 ±0.012)	4.3 ±0.3 (0.169 ±0.012)	2.8 ±0.3 (0.110 ±0.012)	2.4 (0.095)	1.3 (0.051)	0.5 (0.020)	0.10 ±0.10 (0.004 ±0.004)	0.9 (0.035)	1.0 (0.039)	0.13 (0.005)	3.8 (0.150)	3.5 (0.138)	3.5 (0.138)	307.51
O	7360-43	7.3 ±0.3 (0.287 ±0.012)	6.0 ±0.3 (0.236 ±0.012)	4.0 ±0.3 (0.157 ±0.012)	4.1 (0.161)	1.3 (0.051)	N/A	0.10 ±0.10 (0.004 ±0.004)	N/A	N/A	0.13 (0.005)	3.8 (0.150)	3.5 (0.138)	3.5 (0.138)	696.00
X	7343-43	7.3 ±0.3 (0.287 ±0.012)	4.3 ±0.3 (0.169 ±0.012)	4.0 ±0.3 (0.157 ±0.012)	2.4 (0.095)	1.3 (0.051)	0.5 (0.020)	0.10 ±0.10 (0.004 ±0.004)	1.7 (0.067)	1.0 (0.039)	0.13 (0.005)	3.8 (0.150)	3.5 (0.138)	3.5 (0.138)	410.89
Y	7343-40	7.3 ±0.3 (0.287 ±0.012)	4.3 ±0.3 (0.169 ±0.012)	3.8 ±0.2 (0.150 ±0.008)	2.4 (0.095)	1.3 (0.051)	0.5 (0.020)	0.10 ±0.10 (0.004 ±0.004)	1.7 (0.067)	1.0 (0.039)	0.13 (0.005)	3.8 (0.150)	3.5 (0.138)	3.5 (0.138)	378.06

Notes: (Ref) – Dimensions provided for reference only.
These weights are provided as reference. If exact weights are needed, please contact your KEMET Sales Representative

Table 1 – Ratings & Part Number Reference

Rated Voltage	Rated Cap	Case Code/ Case Size	KEMET Part Number	DLA Drawing Number 04051/04052	Improved Humidity	DC Leakage	DF	ESR	Maximum Allowable Ripple Current	Maximum Operating Temp.
VDC at 105°C	µF	KEMET/EIA	(See below for part options)	Part Number	(85°C/85%) Capable	µA at 25°C Maximum	% at 25°C 120 Hz Maximum	mΩ at 25°C 100 kHz Maximum	(rms) mA at 45°C 100 kHz	°C
2.5	330	D/7343-31	T540D337M2R5AH(1)10	04051-002(2)		83	10	25	3,000	125
2.5	330	D/7343-31	T540D337(5)2R5(3)(6)(1)10	N/A		83	10	25	3,000	125
2.5	330	D/7343-31	T540D337(5)2R5(3)H(7)05	N/A	•	83	10	40	2,372	125
2.5	470	D/7343-31	T540D477M2R5AH(1)10	04051-003(2)		118	10	25	3,000	125
2.5	470	D/7343-31	T540D477(5)2R5(3)(6)(1)10	N/A		118	10	25	3,000	125
2.5	470	D/7343-31	T540D477(5)2R5(3)H(7)05	N/A	•	118	10	40	2,372	125
2.5	470	D/7343-31	T541D477M2R5AH(1)20	04052-002(2)		118	10	6	6,519	125
2.5	470	D/7343-31	T541D477(5)2R5(3)(6)(1)20	N/A		118	10	6	6,519	125
2.5	470	D/7343-31	T541D477M2R5AH(1)10	04052-003(2)		118	10	10	5,050	125
2.5	470	D/7343-31	T541D477(5)2R5(3)(6)(1)10	N/A		118	10	10	5,050	125
2.5	680	D/7343-31	T540D687M2R5AH(1)10	04051-004(2)		170	10	25	3,000	125
2.5	680	D/7343-31	T540D687(5)2R5(3)(6)(1)10	N/A		170	10	25	3,000	125
2.5	680	D/7343-31	T540D687(5)2R5(3)H(7)05	N/A	•	170	10	40	2,372	125
2.5	680	D/7343-31	T541D687M2R5AH(1)20	04052-007(2)		170	10	6	6,519	125
2.5	680	D/7343-31	T541D687(5)2R5(3)(6)(1)20	N/A		170	10	6	6,519	125
2.5	680	D/7343-31	T541D687M2R5AH(1)10	04052-008(2)		170	10	10	5,050	125
2.5	680	D/7343-31	T541D687(5)2R5(3)(6)(1)10	N/A		170	10	10	5,050	125
2.5	680	Y/7343-40	T541Y687M2R5AH(1)30	04052-005(2)		170	10	5	7,253	125
2.5	680	Y/7343-40	T541Y687(5)2R5(3)(6)(1)30	N/A		170	10	5	7,253	125
2.5	680	Y/7343-40	T541Y687M2R5AH(1)20	04052-006(2)		170	10	6	6,621	125
2.5	680	Y/7343-40	T541Y687(5)2R5(3)(6)(1)20	N/A		170	10	6	6,621	125
2.5	680	Y/7343-40	T541Y687M2R5AH(1)10	04052-042(2)		170	10	10	5,128	125
2.5	680	Y/7343-40	T541Y687(5)2R5(3)(6)(1)10	N/A		170	10	10	5,128	125
2.5	1000	X/7343-43	T541X108M2R5AH(1)30	04052-009(2)		250	10	5	7,348	125
2.5	1000	X/7343-43	T541X108(5)2R5(3)(6)(1)30	N/A		250	10	5	7,348	125
2.5	1000	X/7343-43	T541X108M2R5AH(1)20	04052-010(2)		250	10	6	6,708	125
2.5	1000	X/7343-43	T541X108(5)2R5(3)(6)(1)20	N/A		250	10	6	6,708	125
2.5	1000	X/7343-43	T541X108M2R5AH(1)10	04052-043(2)		250	10	10	5,196	125
2.5	1000	X/7343-43	T541X108(5)2R5(3)(6)(1)10	N/A		250	10	10	5,196	125
2.5	1000	X/7343-43	T541X108(5)2R5(3)(6)(7)05	N/A	•	250	10	12	4,743	125
2.5	1500	X/7343-43	T541X158M2R5AH(1)30	04052-011(2)		375	10	5	7,348	125
2.5	1500	X/7343-43	T541X158(5)2R5(3)(6)(1)30	N/A		375	10	5	7,348	125
2.5	1500	X/7343-43	T541X158M2R5AH(1)20	04052-044(2)		375	10	6	6,708	125
2.5	1500	X/7343-43	T541X158(5)2R5(3)(6)(1)20	N/A		375	10	6	6,708	125
2.5	1500	X/7343-43	T541X158M2R5AH(1)10	04052-045(2)		375	10	10	5,196	125
2.5	1500	X/7343-43	T541X158(5)2R5(3)(6)(1)10	N/A		375	10	10	5,196	125
2.5	1500	X/7343-43	T541X158(5)2R5(3)(6)(7)05	N/A	•	375	10	12	4,743	125
3	100	B/3528-21	T540B107M003AH(1)10	04051-005(2)		30	8	80	1,260	125
3	100	B/3528-21	T540B107(5)003(3)(6)(1)10	N/A		30	8	80	1,260	125
3	100	B/3528-21	T540B107(5)003(3)H(7)10	N/A	•	30	8	80	1,260	125
3	150	B/3528-21	T540B157M003AH(1)10	04051-006(2)		45	8	80	1,260	125
3	150	B/3528-21	T540B157(5)003(3)(6)(1)10	N/A		45	8	80	1,260	125
3	150	B/3528-21	T540B157(5)003(3)H(7)10	N/A	•	45	8	80	1,260	125
3	330	D/7343-31	T540D337M003AH(1)10	04051-007(2)		99	10	25	3,000	125
3	330	D/7343-31	T540D337(5)003(3)(6)(1)10	N/A		99	10	25	3,000	125
3	330	D/7343-31	T540D337(5)003(3)H(7)05	N/A	•	99	10	40	2,372	125
3	470	D/7343-31	T540D477M003AH(1)10	04051-008(2)		141	10	25	3,000	125
3	470	D/7343-31	T540D477(5)003(3)(6)(1)10	N/A		141	10	25	3,000	125
VDC at 105°C	µF	KEMET/EIA	(See below for part options)	Part Number	(85°C/85%) Capable	µA at 25°C Maximum	% at 25°C 120 Hz Maximum	mΩ at 25°C 100 kHz Maximum	(rms) mA at 45°C 100 kHz	°C
Rated Voltage	Rated Cap	Case Code/ Case Size	KEMET Part Number	DLA Drawing Number 04051/04052	Improved Humidity	DC Leakage	DF	ESR	Maximum Allowable Ripple Current	Maximum Operating Temp.

(1) To complete KEMET part number, insert 65 = 4 cycles +25°C, 66 = 10 cycles +25°C, 67 = 10 cycles −55°C and +85°C, Designates surge current option.
(2) To complete DLA part number, insert Blank = None, A = 10 cycles +25°C ±5°C After Voltage Aging, B = 10 cycles −55°C and +85°C ±5°C After Voltage Aging.
(3) To complete KEMET part number for non-DLA, insert A = N/A ,insert B = 0.1%/1,000 hours, C = 0.01%/1,000 hours, D=0.001%/1,000 hours. Designates Reliability Level.
(4) To complete KEMET part number for non-DLA, insert A = N/A, insert B = 0.1%/1,000 hours or C = 0.01%/1,000 hours. Designates Reliability Level.
(5) To complete KEMET part number, insert M for ±20% or K for ±10%. Designates capacitance tolerance.
(6) To complete KEMET part number insert, H = Solder Plated, T = 100% Tin (Sn). Designates termination finish.
*(7) To complete KEMET part number, insert 85 = 4 cycles at 25°C ±5°C ** + improved humidity capability, 86 = 10 cycles at 25°C ±5°C*** + improved humidity capability, 87= 10 cycles at −55°C +0°C/−5°C and +85°C ±5°C*** + improved humidity capability. Designates surge current option on improved humidity capability.*

Part Numbers marked in blue font are "Under Development." Engineering samples available upon request.

Table 1 – Ratings & Part Number Reference cont.

Rated Voltage	Rated Cap	Case Code/ Case Size	KEMET Part Number	DLA Drawing Number 04051/04052	Improved Humidity	DC Leakage	DF	ESR	Maximum Allowable Ripple Current	Maximum Operating Temp.
VDC at 105°C	µF	KEMET/EIA	(See below for part options)	Part Number	(85°C/85%) Capable	µA at 25°C Maximum	% at 25°C 120 Hz Maximum	mΩ at 25°C 100 kHz Maximum	(rms) mA at 45°C 100 kHz	°C
3	470	D/7343-31	T540D477(5)003(3)H(7)05	N/A	•	141	10	40	2,372	125
3	470	D/7343-31	T541D477M003AH(1)10	04052-012(2)		141	10	10	5,050	125
3	470	D/7343-31	T541D477(5)003(3)(6)(1)10	N/A		141	10	10	5,050	125
3	680	D/7343-31	T540D687M003AH(1)10	04051-009(2)		204	10	25	3,000	125
3	680	D/7343-31	T540D687(5)003(3)(6)(1)10	N/A		204	10	25	3,000	125
3	680	D/7343-31	T540D687(5)003(3)H(7)05	N/A	•	204	10	40	2,372	125
3	680	D/7343-31	T541D687M003AH(1)10	04052-013(2)		204	10	10	5,050	125
3	680	D/7343-31	T541D687(5)003(3)(6)(1)10	N/A		204	10	10	5,050	125
3	1000	X/7343-43	T541X108M003AH(1)10	04052-014(2)		300	10	10	5,196	125
3	1000	X/7343-43	T541X108(5)003(3)(6)(1)10	N/A		300	10	10	5,196	125
3	1000	X/7343-43	T541X108(5)003(3)(6)(7)05	N/A	•	300	10	12	4,743	125
3	1500	X/7343-43	T541X158M003AH(1)10	04052-015(2)		450	10	8	5,809	125
3	1500	X/7343-43	T541X158(5)003(3)(6)(1)10	N/A		450	10	8	5,809	125
3	1500	X/7343-43	T541X158(5)003(3)(6)(7)05	N/A	•	450	10	12	4,743	125
3	2000	O/7360-43	T541O208M003(3)(6)(1)10	N/A		600	10	10	5,480	125
4	68	B/3528-21	T540B686M004AH(1)10	04051-011(2)		28	8	80	1,260	125
4	68	B/3528-21	T540B686(5)004(3)(6)(1)10	N/A		28	8	80	1,260	125
4	68	B/3528-21	T540B686(5)004(3)H(7)10	N/A	•	28	8	80	1,260	125
4	100	B/3528-21	T540B107M004AH(1)10	04051-012(2)		40	8	80	1,260	125
4	100	B/3528-21	T540B107(5)004(3)(6)(1)10	N/A		40	8	80	1,260	125
4	100	B/3528-21	T540B107(5)004(3)H(7)10	N/A	•	40	8	80	1,260	125
4	220	D/7343-31	T540D227M004AH(1)10	04051-013(2)		88	10	25	3,000	125
4	220	D/7343-31	T540D227(5)004(3)(6)(1)10	N/A		88	10	25	3,000	125
4	220	D/7343-31	T540D227(5)004(3)H(7)05	N/A	•	88	10	40	2,372	125
4	330	D/7343-31	T540D337M004AH(1)10	04051-014(2)		132	10	25	3,000	125
4	330	D/7343-31	T540D337(5)004(3)(6)(1)10	N/A		132	10	25	3,000	125
4	330	D/7343-31	T540D337(5)004(3)H(7)05	N/A	•	132	10	40	2,372	125
4	330	D/7343-31	T541D337M004AH(1)20	04052-017(2)		132	10	6	6,519	125
4	330	D/7343-31	T541D337(5)004(3)(6)(1)20	N/A		132	10	6	6,519	125
4	330	D/7343-31	T541D337M004AH(1)10	04052-046(2)		132	10	10	5,050	125
4	330	D/7343-31	T541D337(5)004(3)(6)(1)10	N/A		132	10	10	5,050	125
4	470	D/7343-31	T540D477M004AH(1)20	04051-015(2)		188	10	25	3,000	125
4	470	D/7343-31	T540D477(5)004(3)(6)(1)20	N/A		188	10	25	3,000	125
4	470	D/7343-31	T540D477M004AH(1)10	04051-016(2)		188	10	40	2,372	125
4	470	D/7343-31	T540D477(5)004(3)(6)(1)10	N/A		188	10	40	2,372	125
4	470	D/7343-31	T540D477(5)004(3)H(7)10	N/A	•	188	10	40	2,372	125
4	470	D/7343-31	T541D477M004AH(1)10	04052-018(2)		188	10	10	5,050	125
4	470	D/7343-31	T541D477(5)004(3)(6)(1)10	N/A		188	10	10	5,050	125
4	470	Y/7343-40	T541Y477M004AH(1)30	04052-019(2)		188	10	5	7,253	125
4	470	Y/7343-40	T541Y477(5)004(3)(6)(1)30	N/A		188	10	5	7,253	125
4	470	Y/7343-40	T541Y477M004AH(1)20	04052-020(2)		188	10	6	6,621	125
4	470	Y/7343-40	T541Y477(5)004(3)(6)(1)20	N/A		188	10	6	6,621	125
4	470	Y/7343-40	T541Y477M004AH(1)10	04052-047(2)		188	10	10	5,128	125
4	470	Y/7343-40	T541Y477(5)004(3)(6)(1)10	N/A		188	10	10	5,128	125
4	680	X/7343-43	T541X687M004AH(1)30	04052-021(2)		272	10	5	7,348	125
4	680	X/7343-43	T541X687(5)004(3)(6)(1)30	N/A		272	10	5	7,348	125
4	680	X/7343-43	T541X687M004AH(1)20	04052-022(2)		272	10	6	6,708	125
4	680	X/7343-43	T541X687(5)004(3)(6)(1)20	N/A		272	10	6	6,708	125
VDC at 105°C	µF	KEMET/EIA	(See below for part options)	Part Number	(85°C/85%) Capable	µA at 25°C Maximum	% at 25°C 120 Hz Maximum	mΩ at 25°C 100 kHz Maximum	(rms) mA at 45°C 100 kHz	°C
Rated Voltage	Rated Cap	Case Code/ Case Size	KEMET Part Number	DLA Drawing Number 04051/04052	Improved Humidity	DC Leakage	DF	ESR	Maximum Allowable Ripple Current	Maximum Operating Temp.

(1) To complete KEMET part number, insert 65 = 4 cycles +25°C, 66 = 10 cycles +25°C, 67 = 10 cycles −55°C and +85°C, Designates surge current option.
(2) To complete DLA part number, insert Blank = None, A = 10 cycles +25°C ±5°C After Voltage Aging, B = 10 cycles −55°C and +85°C ±5°C After Voltage Aging.
(3) To complete KEMET part number for non-DLA, insert A = N/A ,insert B = 0.1%/1,000 hours, C = 0.01%/1,000 hours, D=0.001%/1,000 hours. Designates Reliability Level.
(4) To complete KEMET part number for non-DLA, insert A = N/A, insert B = 0.1%/1,000 hours or C = 0.01%/1,000 hours. Designates Reliability Level.
(5) To complete KEMET part number, insert M for ±20% or K for ±10%. Designates capacitance tolerance.
(6) To complete KEMET part number insert, H = Solder Plated, T = 100% Tin (Sn). Designates termination finish.
*(7) To complete KEMET part number, insert 85 = 4 cycles at 25°C ±5°C ** + improved humidity capability, 86 = 10 cycles at 25°C ±5°C*** + improved humidity capability, 87= 10 cycles at −55°C +0°C/−5°C and +85°C ±5°C*** + improved humidity capability. Designates surge current option on improved humidity capability.*

Part Numbers marked in blue font are "Under Development." Engineering samples available upon request.

Table 1 – Ratings & Part Number Reference cont.

Rated Voltage	Rated Cap	Case Code/ Case Size	KEMET Part Number	DLA Drawing Number 04051/04052	Improved Humidity	DC Leakage	DF	ESR	Maximum Allowable Ripple Current	Maximum Operating Temp.
VDC at 105°C	µF	KEMET/EIA	(See below for part options)	Part Number	(85°C/85%) Capable	µA at 25°C Maximum	% at 25°C 120 Hz Maximum	mΩ at 25°C 100 kHz Maximum	(rms) mA at 45°C 100 kHz	°C
4	680	X/7343-43	T541X687M004AH(1)10	04052-023(2)		272	10	10	5,196	125
4	680	X/7343-43	T541X687(5)004(3)(6)(1)10	N/A		272	10	10	5,196	125
4	680	X/7343-43	T541X687(5)004(3)(6)(7)05	N/A	•	272	10	12	4,743	125
4	1000	X/7343-43	T541X108M004AH(1)20	04052-024(2)		400	10	6	6,708	125
4	1000	X/7343-43	T541X108(5)004(3)(6)(1)20	N/A		400	10	6	6,708	125
4	1000	X/7343-43	T541X108M004AH(1)10	04052-048(2)		400	10	10	5,196	125
4	1000	X/7343-43	T541X108(5)004(3)(6)(1)10	N/A		400	10	10	5,196	125
4	1000	X/7343-43	T541X108(5)004(3)(6)(7)05	N/A	•	400	10	12	4,743	125
4	1500	O/7360-43	T541O158M004(3)(6)(1)10	N/A		600	10	10	5,480	125
6.3	33	B/3528-21	T540B336M006AH(1)10	04051-017(2)		21	8	80	1,260	125
6.3	33	B/3528-21	T540B336(5)006(3)(6)(1)10	N/A		21	8	80	1,260	125
6.3	33	B/3528-21	T540B336(5)006(3)H(7)10	N/A	•	21	8	80	1,260	125
6.3	47	B/3528-21	T540B476M006AH(1)10	04051-019(2)		30	8	80	1,260	125
6.3	47	B/3528-21	T540B476(5)006(3)(6)(1)10	N/A		30	8	80	1,260	125
6.3	47	B/3528-21	T540B476(5)006(3)H(7)10	N/A	•	30	8	80	1,260	125
6.3	68	B/3528-21	T540B686M006AH(1)10	04051-020(2)		43	8	80	1,260	125
6.3	68	B/3528-21	T540B686(5)006(3)(6)(1)10	N/A		43	8	80	1,260	125
6.3	68	B/3528-21	T540B686(5)006(3)H(7)10	N/A	•	43	8	80	1,260	125
6.3	150	D/7343-31	T540D157M006AH(1)10	04051-021(2)		95	10	25	3,000	125
6.3	150	D/7343-31	T540D157(5)006(3)(6)(1)10	N/A		95	10	25	3,000	125
6.3	150	D/7343-31	T540D157(5)006(3)H(7)05	N/A	•	95	10	40	2,372	125
6.3	220	D/7343-31	T540D227M006AH(1)10	04051-022(2)		139	10	25	3,000	125
6.3	220	D/7343-31	T540D227(5)006(3)(6)(1)10	N/A		139	10	25	3,000	125
6.3	220	D/7343-31	T540D227(5)006(3)H(7)05	N/A	•	139	10	40	2,372	125
6.3	220	D/7343-31	T541D227M006AH(1)20	04052-026(2)		139	10	6	6,519	125
6.3	220	D/7343-31	T541D227(5)006(3)(6)(1)20	N/A		139	10	6	6,519	125
6.3	220	D/7343-31	T541D227M006AH(1)10	04052-049(2)		139	10	10	5,050	125
6.3	220	D/7343-31	T541D227(5)006(3)(6)(1)10	N/A		139	10	10	5,050	125
6.3	330	D/7343-31	T540D337M006AH(1)20	04051-023(2)		208	10	25	3,000	125
6.3	330	D/7343-31	T540D337(5)006(3)(6)(1)20	N/A		208	10	25	3,000	125
6.3	330	D/7343-31	T540D337M006AH(1)10	04051-024(2)		208	10	40	2,372	125
6.3	330	D/7343-31	T540D337(5)006(3)(6)(1)10	N/A		208	10	40	2,372	125
6.3	330	D/7343-31	T540D337(5)006(3)H(7)10	N/A	•	208	10	40	2,372	125
6.3	330	D/7343-31	T541D337M006AH(1)10	04052-027(2)		208	10	10	5,050	125
6.3	330	D/7343-31	T541D337(5)006(3)(6)(1)10	N/A		208	10	10	5,050	125
6.3	330	Y/7343-40	T541Y337M006AH(1)30	04052-028(2)		208	10	5	7,253	125
6.3	330	Y/7343-40	T541Y337(5)006(3)(6)(1)30	N/A		208	10	5	7,253	125
6.3	330	Y/7343-40	T541Y337M006AH(1)20	04052-029(2)		208	10	6	6,621	125
6.3	330	Y/7343-40	T541Y337(5)006(3)(6)(1)20	N/A		208	10	6	6,621	125
6.3	330	Y/7343-40	T541Y337M006AH(1)10	04052-030(2)		208	10	10	5,128	125
6.3	330	Y/7343-40	T541Y337(5)006(3)(6)(1)10	N/A		208	10	10	5,128	125
6.3	470	X/7343-43	T541X477M006AH(1)30	04052-031(2)		296	10	5	7,348	125
6.3	470	X/7343-43	T541X477(5)006(3)(6)(1)30	N/A		296	10	5	7,348	125
6.3	470	X/7343-43	T541X477M006AH(1)20	04052-032(2)		296	10	6	6,708	125
6.3	470	X/7343-43	T541X477(5)006(3)(6)(1)20	N/A		296	10	6	6,708	125
6.3	470	X/7343-43	T541X477M006AH(1)10	04052-033(2)		296	10	10	5,196	125
6.3	470	X/7343-43	T541X477(5)006(3)(6)(1)10	N/A		296	10	10	5,196	125
6.3	470	X/7343-43	T541X477(5)006(3)(6)(7)05	N/A	•	296	10	12	4,743	125
VDC at 105°C	µF	KEMET/EIA	(See below for part options)	Part Number	(85°C/85%) Capable	µA at 25°C Maximum	% at 25°C 120 Hz Maximum	mΩ at 25°C 100 kHz Maximum	(rms) mA at 45°C 100 kHz	°C
Rated Voltage	Rated Cap	Case Code/ Case Size	KEMET Part Number	DLA Drawing Number 04051/04052	Improved Humidity	DC Leakage	DF	ESR	Maximum Allowable Ripple Current	Maximum Operating Temp.

(1) To complete KEMET part number, insert 65 = 4 cycles +25°C, 66 = 10 cycles +25°C, 67 = 10 cycles −55°C and +85°C, Designates surge current option.
(2) To complete DLA part number, insert Blank = None, A = 10 cycles +25°C ±5°C After Voltage Aging, B = 10 cycles −55°C and +85°C ±5°C After Voltage Aging.
(3) To complete KEMET part number for non-DLA, insert A = N/A ,insert B = 0.1%/1,000 hours, C = 0.01%/1,000 hours, D=0.001%/1,000 hours. Designates Reliability Level.
(4) To complete KEMET part number for non-DLA, insert A = N/A, insert B = 0.1%/1,000 hours or C = 0.01%/1,000 hours. Designates Reliability Level.
(5) To complete KEMET part number, insert M for ±20% or K for ±10%. Designates capacitance tolerance.
(6) To complete KEMET part number insert, H = Solder Plated, T = 100% Tin (Sn). Designates termination finish.
*(7) To complete KEMET part number, insert 85 = 4 cycles at 25°C ±5°C ** + improved humidity capability, 86 = 10 cycles at 25°C ±5°C*** + improved humidity capability, 87= 10 cycles at −55°C +0°C/−5°C and +85°C ±5°C*** + improved humidity capability. Designates surge current option on improved humidity capability.*

Part Numbers marked in blue font are "Under Development." Engineering samples available upon request.

Table 1 – Ratings & Part Number Reference cont.

Rated Voltage	Rated Cap	Case Code/ Case Size	KEMET Part Number	DLA Drawing Number 04051/04052	Improved Humidity	DC Leakage	DF	ESR	Maximum Allowable Ripple Current	Maximum Operating Temp.
VDC at 105°C	µF	KEMET/EIA	(See below for part options)	Part Number	(85°C/85%) Capable	µA at 25°C Maximum	% at 25°C 120 Hz Maximum	mΩ at 25°C 100 kHz Maximum	(rms) mA at 45°C 100 kHz	°C
6.3	680	X/7343-43	T541X687(5)006A(6)(7)10	N/A	•	428	10	15	4,243	125
6.3	1000	O/7360-43	T541O108M006(3)(6)(1)10	N/A		630	10	12	5,000	125
10	22	A/3216-18	T540A226M010(4)(6)(1)10	N/A		22	8	80	1,183	125
10	22	B/3528-21	T540B226M010AH(1)10	04051-025(2)		22	8	80	1,260	125
10	22	B/3528-21	T540B226(5)010(3)(6)(1)10	N/A		22	8	80	1,260	125
10	22	B/3528-21	T540B226(5)010(3)(6)(7)10	N/A	•	22	8	80	1,260	125
10	33	B/3528-21	T540B336M010AH(1)10	04051-027(2)		33	8	80	1,260	125
10	33	B/3528-21	T540B336(5)010(3)(6)(1)10	N/A		33	8	80	1,260	125
10	33	B/3528-21	T540B336(5)010(3)(6)(7)10	N/A	•	33	8	80	1,260	125
10	47	B/3528-21	T540B476M010(4)(6)(1)20	N/A		47	8	35	1,905	125
10	47	B/3528-21	T540B476M010(4)(6)(1)10	N/A		47	8	100	1,127	125
10	100	D/7343-31	T540D107M010AH(1)20	04051-028(2)		100	10	25	3,000	125
10	100	D/7343-31	T540D107(5)010(3)(6)(1)20	N/A		100	10	25	3,000	125
10	100	D/7343-31	T540D107M010AH(1)10	04051-029(2)		100	10	55	2,023	125
10	100	D/7343-31	T540D107(5)010(3)(6)(1)10	N/A		100	10	55	2,023	125
10	100	D/7343-31	T540D107(5)010(3)(6)(7)10	N/A	•	100	10	55	2,023	125
10	150	D/7343-31	T540D157M010AH(1)20	04051-030(2)		150	10	25	3,000	125
10	150	D/7343-31	T540D157(5)010(3)(6)(1)20	N/A		150	10	25	3,000	125
10	150	D/7343-31	T540D157M010AH(1)10	04051-031(2)		150	10	55	2,023	125
10	150	D/7343-31	T540D157(5)010(3)(6)(1)10	N/A		150	10	55	2,023	125
10	150	D/7343-31	T540D157(5)010(3)(6)(7)10	N/A	•	150	10	55	2,023	125
10	150	D/7343-31	T541D157M010AH(1)20	04052-035(2)		150	10	6	6,519	125
10	150	D/7343-31	T541D157(5)010(3)(6)(1)20	N/A		150	10	6	6,519	125
10	150	D/7343-31	T541D157M010AH(1)10	04052-050(2)		150	10	10	5,050	125
10	150	D/7343-31	T541D157(5)010(3)(6)(1)10	N/A		150	10	10	5,050	125
10	220	D/7343-31	T540D227M010AH(1)10	04051-032(2)		220	10	25	3,000	125
10	220	D/7343-31	T540D227(5)010(3)(6)(1)10	N/A		220	10	25	3,000	125
10	220	D/7343-31	T540D227(5)010(3)(6)(7)05	N/A	•	220	10	35	3,000	125
10	220	D/7343-31	T541D227M010AH(1)20	04052-036(2)		220	10	6	6,519	125
10	220	D/7343-31	T541D227(5)010(3)(6)(1)20	N/A		220	10	6	6,519	125
10	220	D/7343-31	T541D227M010AH(1)10	04052-037(2)		220	10	10	5,050	125
10	220	D/7343-31	T541D227(5)010(3)(6)(1)10	N/A		220	10	10	5,050	125
10	220	Y/7343-40	T541Y227M010AH(1)20	04052-038(2)		220	10	6	6,621	125
10	220	Y/7343-40	T541Y227(5)010(3)(6)(1)20	N/A		220	10	6	6,621	125
10	220	Y/7343-40	T541Y227M010AH(1)10	04052-051(2)		220	10	10	5,128	125
10	220	Y/7343-40	T541Y227(5)010(3)(6)(1)10	N/A		220	10	10	5,128	125
10	330	X/7343-43	T541X337M010AH(1)30	04052-039(2)		330	10	5	7,348	125
10	330	X/7343-43	T541X337(5)010(4)(6)(1)30	N/A		330	10	5	7,348	125
10	330	X/7343-43	T541X337M010AH(1)20	04052-040(2)		330	10	6	6,708	125
10	330	X/7343-43	T541X337(5)010(4)(6)(1)20	N/A		330	10	6	6,708	125
10	330	X/7343-43	T541X337M010AH(1)10	04052-041(2)		330	10	10	5,196	125
10	330	X/7343-43	T541X337(5)010(3)(6)(1)10	N/A		330	10	10	5,196	125
10	330	X/7343-43	T541X337(5)010(4)(6)(7)05	N/A	•	330	10	15	4,243	125
10	470	X/7343-43	T541X477(5)010(3)(6)(7)10	N/A	•	470	10	20	3,674	125
10	680	O/7360-43	T541O687M010(3)(6)(1)10	N/A		680	10	15	4,470	125
16	47	D/7343-31	T540D476M016AH(1)20	04051-033(2)		76	10	35	2,535	125
16	47	D/7343-31	T540D476(5)016(3)(6)(1)20	N/A		76	10	35	2,535	125
16	47	D/7343-31	T540D476M016AH(1)10	04051-034(2)		76	10	65	1,861	125
VDC at 105°C	µF	KEMET/EIA	(See below for part options)	Part Number	(85°C/85%) Capable	µA at 25°C Maximum	% at 25°C 120 Hz Maximum	mΩ at 25°C 100 kHz Maximum	(rms) mA at 45°C 100 kHz	°C
Rated Voltage	Rated Cap	Case Code/ Case Size	KEMET Part Number	DLA Drawing Number 04051/04052	Improved Humidity	DC Leakage	DF	ESR	Maximum Allowable Ripple Current	Maximum Operating Temp.

(1) To complete KEMET part number, insert 65 = 4 cycles +25°C, 66 = 10 cycles +25°C, 67 = 10 cycles −55°C and +85°C, Designates surge current option.
(2) To complete DLA part number, insert Blank = None, A = 10 cycles +25°C ±5°C After Voltage Aging, B = 10 cycles −55°C and +85°C ±5°C After Voltage Aging.
(3) To complete KEMET part number for non-DLA, insert A = N/A ,insert B = 0.1%/1,000 hours, C = 0.01%/1,000 hours, D=0.001%/1,000 hours. Designates Reliability Level.
(4) To complete KEMET part number for non-DLA, insert A = N/A, insert B = 0.1%/1,000 hours or C = 0.01%/1,000 hours. Designates Reliability Level.
(5) To complete KEMET part number, insert M for ±20% or K for ±10%. Designates capacitance tolerance.
(6) To complete KEMET part number insert, H = Solder Plated, T = 100% Tin (Sn). Designates termination finish.
*(7) To complete KEMET part number, insert 85 = 4 cycles at 25°C ±5°C ** + improved humidity capability, 86 = 10 cycles at 25°C ±5°C*** + improved humidity capability, 87= 10 cycles at −55°C +0°C/−5°C and +85°C ±5°C*** + improved humidity capability. Designates surge current option on improved humidity capability.*

Part Numbers marked in blue font are "Under Development." Engineering samples available upon request.

Table 1 – Ratings & Part Number Reference cont.

Rated Voltage	Rated Cap	Case Code/ Case Size	KEMET Part Number	DLA Drawing Number 04051/04052	Improved Humidity	DC Leakage	DF	ESR	Maximum Allowable Ripple Current	Maximum Operating Temp.
VDC at 105°C	µF	KEMET/EIA	(See below for part options)	Part Number	(85°C/85%) Capable	µA at 25°C Maximum	% at 25°C 120 Hz Maximum	mΩ at 25°C 100 kHz Maximum	(rms) mA at 45°C 100 kHz	°C
16	47	D/7343-31	T540D476(5)016(3)(6)(1)10	N/A		76	10	65	1,861	125
16	47	D/7343-31	T540D476(5)016(3)(6)(7)10	N/A	•	76	10	65	1,861	125
16	68	D/7343-31	T540D686M016AH(1)10	04051-035(2)		109	10	75	1,732	125
16	68	D/7343-31	T540D686(5)016(3)(6)(1)10	N/A		109	10	75	1,732	125
16	68	D/7343-31	T540D686(5)016(3)(6)(7)10	N/A	•	109	10	75	1,732	125
16	100	D/7343-31	T540D107M016AH(1)10	04051-036(2)		160	10	50	2,121	125
16	100	D/7343-31	T540D107(5)016(3)(6)(1)10	N/A		160	10	50	2,121	125
16	100	D/7343-31	T540D107(5)016(3)(6)(7)05	N/A	•	160	10	75	2,121	125
16	150	X/7343-43	T541X157M016AH(1)20	04052-052(2)		240	10	25	3,286	125
16	150	X/7343-43	T541X157(5)016(3)(6)(1)20	N/A		240	10	25	3,286	125
16	150	X/7343-43	T541X157M016AH(1)10	04052-053(2)		240	10	40	2,598	125
16	150	X/7343-43	T541X157(5)016(3)(6)(7)10	N/A	•	240	10	40	2,598	125
16	220	X/7343-43	T541X227M016AH(1)20	04052-054(2)		352	10	25	3,286	125
16	220	X/7343-43	T541X227(5)016(3)(6)(1)20	N/A		352	10	25	3,286	125
16	220	X/7343-43	T541X227M016AH(1)10	04052-055(2)		352	10	40	2,598	125
16	220	X/7343-43	T541X227(5)016(3)(6)(7)10	N/A	•	352	10	40	2,598	125
16	330	X/7343-43	T541X337M016AH(1)20	04052-056(2)		528	10	25	3,286	125
16	330	X/7343-43	T541X337(5)016(3)(6)(7)20	N/A	•	528	10	25	3,286	125
16	330	X/7343-43	T541X337M016AH(1)10	04052-057(2)		528	10	50	2,324	125
16	330	X/7343-43	T541X337(5)016(3)(6)(7)10	N/A	•	528	10	50	2,324	125
16	470	O/7360-43	T541O477M016(3)(6)(1)20	N/A		752	10	20	3,870	125
16	470	O/7360-43	T541O477M016(3)(6)(1)10	N/A		752	10	40	2,740	125
20	22	D/7343-31	T540D226M020AH(1)10	04051-037(2)		44	10	75	1,732	125
20	22	D/7343-31	T540D226(5)020(3)(6)(1)10	N/A		44	10	75	1,732	125
20	22	D/7343-31	T540D226(5)020(3)(6)(7)05	N/A	•	44	10	100	1,500	125
20	33	D/7343-31	T540D336M020AH(1)10	04051-038(2)		66	10	75	1,732	125
20	33	D/7343-31	T540D336(5)020(3)(6)(1)10	N/A		66	10	75	1,732	125
20	33	D/7343-31	T540D336(5)020(3)(6)(7)05	N/A	•	66	10	100	1,500	125
20	47	D/7343-31	T540D476M020AH(1)10	04051-039(2)		94	10	75	1,732	125
20	47	D/7343-31	T540D476(5)020(3)(6)(1)10	N/A		94	10	75	1,732	125
20	47	D/7343-31	T540D476(5)020(3)(6)(7)05	N/A	•	94	10	100	1,500	125
20	100	X/7343-43	T541X107M020AH(1)10	04052-058(2)		200	10	50	2,324	125
20	100	X/7343-43	T541X107(5)020A(6)(7)20	N/A	•	200	10	30	2,870	125
20	100	X/7343-43	T541X107(5)020(3)(6)(7)10	N/A	•	200	10	50	2,324	125
25	6.8	C/6032-28	T540C685(5)025(3)(6)(1)10	N/A		17	10	150	1,049	125
25	10	C/6032-28	T540C106(5)025(3)(6)(1)10	N/A		25	10	150	1,049	125
25	15	D/7343-31	T540D156M025AH(1)20	04051-040(2)		38	10	75	1,732	125
25	15	D/7343-31	T540D156(5)025(3)(6)(1)20	N/A		38	10	75	1,732	125
25	15	D/7343-31	T540D156M025AH(1)10	04051-041(2)		38	10	100	1,500	125
25	15	D/7343-31	T540D156(5)025(3)(6)(7)10	N/A	•	38	10	100	1,500	125
25	22	D/7343-31	T540D226M025AH(1)10	04051-042(2)		55	10	75	1,732	125
25	22	D/7343-31	T540D226(5)025(3)(6)(1)10	N/A		55	10	75	1,732	125
25	22	D/7343-31	T540D226(5)025(3)(6)(7)05	N/A	•	55	10	100	1,500	125
25	33	D/7343-31	T540D336M025AH(1)10	04051-043(2)		83	10	75	1,732	125
25	33	D/7343-31	T540D336(5)025(3)(6)(1)10	N/A		83	10	75	1,732	125
25	33	D/7343-31	T540D336(5)025(3)(6)(7)05	N/A	•	83	10	100	1,500	125
25	68	X/7343-43	T541X686M025AH(1)10	04052-059(2)		170	10	50	2,324	125
25	68	X/7343-43	T541X686(5)025(3)(6)(1)10	N/A		170	10	50	2,324	125
VDC at 105°C	µF	KEMET/EIA	(See below for part options)	Part Number	(85°C/85%) Capable	µA at 25°C Maximum	% at 25°C 120 Hz Maximum	mΩ at 25°C 100 kHz Maximum	(rms) mA at 45°C 100 kHz	°C
Rated Voltage	Rated Cap	Case Code/ Case Size	KEMET Part Number	DLA Drawing Number 04051/04052	Improved Humidity	DC Leakage	DF	ESR	Maximum Allowable Ripple Current	Maximum Operating Temp.

(1) To complete KEMET part number, insert 65 = 4 cycles +25°C, 66 = 10 cycles +25°C, 67 = 10 cycles −55°C and +85°C, Designates surge current option.
(2) To complete DLA part number, insert Blank = None, A = 10 cycles +25°C ±5°C After Voltage Aging, B = 10 cycles −55°C and +85°C ±5°C After Voltage Aging.
(3) To complete KEMET part number for non-DLA, insert A = N/A ,insert B = 0.1%/1,000 hours, C = 0.01%/1,000 hours, D=0.001%/1,000 hours. Designates Reliability Level.
(4) To complete KEMET part number for non-DLA, insert A = N/A, insert B = 0.1%/1,000 hours or C = 0.01%/1,000 hours. Designates Reliability Level.
(5) To complete KEMET part number, insert M for ±20% or K for ±10%. Designates capacitance tolerance.
(6) To complete KEMET part number insert, H = Solder Plated, T = 100% Tin (Sn). Designates termination finish.
*(7) To complete KEMET part number, insert 85 = 4 cycles at 25°C ±5°C ** + improved humidity capability, 86 = 10 cycles at 25°C ±5°C*** + improved humidity capability, 87= 10 cycles at −55°C +0°C/−5°C and +85°C ±5°C*** + improved humidity capability. Designates surge current option on improved humidity capability.*

Part Numbers marked in blue font are "Under Development." Engineering samples available upon request.

Table 1 – Ratings & Part Number Reference cont.

Rated Voltage	Rated Cap	Case Code/ Case Size	KEMET Part Number	DLA Drawing Number 04051/04052	Improved Humidity	DC Leakage	DF	ESR	Maximum Allowable Ripple Current	Maximum Operating Temp.
VDC at 105°C	µF	KEMET/EIA	(See below for part options)	Part Number	(85°C/85%) Capable	µA at 25°C Maximum	% at 25°C 120 Hz Maximum	mΩ at 25°C 100 kHz Maximum	(rms) mA at 45°C 100 kHz	°C
25	68	X/7343-43	T541X686(5)025(3)(6)(7)10	N/A	•	170	10	50	2,324	125
25	100	X/7343-43	T541X107M025AH(1)10	04052-060(2)		250	10	60	2,121	125
25	100	X/7343-43	T541X107(5)025(3)(6)(7)10	N/A	•	250	10	60	2,121	125
25	100	X/7343-43	T541X107(5)025(3)(6)(1)20	N/A	•	250	10	35	2,777	125
25	150	O/7360-43	T541O157M025(3)(6)(1)10	N/A		375	10	45	2,580	125
30	22	D/7343-31	T540D226(5)030(3)(6)(1)10	N/A		66	10	75	1,732	125
30	22	D/7343-31	T540D226(5)030(3)(6)(7)05	N/A	•	66	10	100	1,500	125
30	33	D/7343-31	T540D336(5)030(3)(6)(7)10	N/A	•	99	10	100	1,500	125
30	47	X/7343-43	T541X476(5)030(3)(6)(7)10	N/A	•	141	10	50	2,324	125
30	68	X/7343-43	T541X686(5)030(3)(6)(7)10	N/A	•	204	10	50	2,324	125
30	68	X/7343-43	T541X686(5)030(3)(6)(7)20	N/A	•	204	10	35	2,777	125
30	100	X/7343-43	T541X107(5)030(3)(6)(7)10	N/A	•	300	10	70	1,878	125
30	100	X/7343-43	T541X107(5)030(3)(6)(7)20	N/A	•	300	10	35	2,777	125
30	150	O/7360-43	T541O157M030(3)(6)(1)20	N/A		450	10	30	3,160	125
30	150	O/7360-43	T541O157M030(3)(6)(1)10	N/A		450	10	55	2,340	125
35	15	D/7343-31	T540D156M035AH(1)20	04051-044(2)		53	10	75	1,732	125
35	15	D/7343-31	T540D156(5)035(4)(6)(1)20	N/A		53	10	75	1,732	125
35	15	D/7343-31	T540D156M035AH(1)10	04051-045(2)		53	10	100	1,500	125
35	15	D/7343-31	T540D156(5)035(4)(6)(7)10	N/A	•	53	10	100	1,500	125
35	33	X/7343-43	T541X336M035AH(1)10	04052-061(2)		116	10	60	2,121	125
35	33	X/7343-43	T541X336(5)035(4)(6)(7)10	N/A	•	116	10	60	2,121	125
35	47	X/7343-43	T541X476M035AH(1)10	04052-062(2)		165	10	60	2,121	125
35	47	X/7343-43	T541X476(5)035(4)(6)(7)10	N/A	•	165	10	60	2,121	125
35	**68**	**O/7360-43**	**T541O686M035(4)(6)(1)10**	**N/A**		**238**	**10**	**45**	**2,580**	**125**
50	10	D/7343-31	T540D106M050AH(1)20	04051-046(2)		50	10	100	1,500	125
50	10	D/7343-31	T540D106(5)050(4)(6)(1)20	N/A		50	10	100	1,500	125
50	10	D/7343-31	T540D106M050AH(1)10	04051-047(2)		50	10	125	1,342	125
50	10	D/7343-31	T540D106(5)050(4)(6)(7)10	N/A	•	50	10	125	1,342	125
50	22	X/7343-43	T541X226M050AH(1)10	04052-063(2)		110	10	75	1,897	125
50	22	X/7343-43	T541X226(5)050(4)(6)(1)10	N/A		110	10	75	1,897	125
50	33	X/7343-43	T541X336M050AH(1)10	04052-064(2)		165	10	75	1,897	125
50	33	X/7343-43	T541X336(5)050(4)(6)(1)10	N/A		165	10	75	1,897	125
50	**47**	**O/7360-43**	**T541O476M050(4)(6)(1)10**	**N/A**		**235**	**10**	**60**	**2,240**	**125**
63	4.7	D/7343-31	T540D475M063AH(1)20	04051-048(2)		30	10	100	1,500	125
63	4.7	D/7343-31	T540D475(5)063(4)(6)(1)20	N/A		30	10	100	1,500	125
63	4.7	D/7343-31	T540D475M063AH(1)10	04051-049(2)		30	10	120	1,369	125
63	4.7	D/7343-31	T540D475(5)063(4)(6)(7)10	N/A	•	30	10	120	1,369	125
63	10	X/7343-43	T541X106M063AH(1)10	04052-067(2)		63	10	150	1,342	125
63	10	X/7343-43	T541X106(5)063(4)(6)(1)10	N/A		63	10	150	1,342	125
63	10	X/7343-43	T541X106M063AH(1)20	04052-066(2)		63	10	100	1,643	125
63	10	X/7343-43	T541X106(5)063(4)(6)(1)20	N/A		63	10	100	1,643	125
63	10	X/7343-43	T541X106M063AH(1)30	04052-065(2)		63	10	75	1,897	125
63	10	X/7343-43	T541X106(5)063(4)(6)(1)30	N/A		63	10	75	1,897	125
63	15	X/7343-43	T541X156M063AH(1)10	04052-068(2)		95	10	50	2,324	125
63	15	X/7343-43	T541X156(5)063(4)(6)(1)10	N/A		95	10	50	2,324	125
63	**22**	**O/7360-43**	**T541O226M063(4)(6)(1)10**	**N/A**		**139**	**10**	**40**	**2,740**	**125**
VDC at 105°C	µF	KEMET/EIA	(See below for part options)	Part Number	(85°C/85%) Capable	µA at 25°C Maximum	% at 25°C 120 Hz Maximum	mΩ at 25°C 100 kHz Maximum	(rms) mA at 45°C 100 kHz	°C
Rated Voltage	Rated Cap	Case Code/ Case Size	KEMET Part Number	DLA Drawing Number 04051/04052	Improved Humidity	DC Leakage	DF	ESR	Maximum Allowable Ripple Current	Maximum Operating Temp.

(1) To complete KEMET part number, insert 65 = 4 cycles +25°C, 66 = 10 cycles +25°C, 67 = 10 cycles −55°C and +85°C, Designates surge current option.
(2) To complete DLA part number, insert Blank = None, A = 10 cycles +25°C ±5°C After Voltage Aging, B = 10 cycles −55°C and +85°C ±5°C After Voltage Aging.
(3) To complete KEMET part number for non-DLA, insert A = N/A ,insert B = 0.1%/1,000 hours, C = 0.01%/1,000 hours, D=0.001%/1,000 hours. Designates Reliability Level.
(4) To complete KEMET part number for non-DLA, insert A = N/A, insert B = 0.1%/1,000 hours or C = 0.01%/1,000 hours. Designates Reliability Level.
(5) To complete KEMET part number, insert M for ±20% or K for ±10%. Designates capacitance tolerance.
(6) To complete KEMET part number insert, H = Solder Plated, T = 100% Tin (Sn). Designates termination finish.
*(7) To complete KEMET part number, insert 85 = 4 cycles at 25°C ±5°C ** + improved humidity capability, 86 = 10 cycles at 25°C ±5°C*** + improved humidity capability, 87= 10 cycles at −55°C +0°C/−5°C and +85°C ±5°C*** + improved humidity capability. Designates surge current option on improved humidity capability.*

Part Numbers marked in blue font are "Under Development." Engineering samples available upon request.

Derating Guidelines

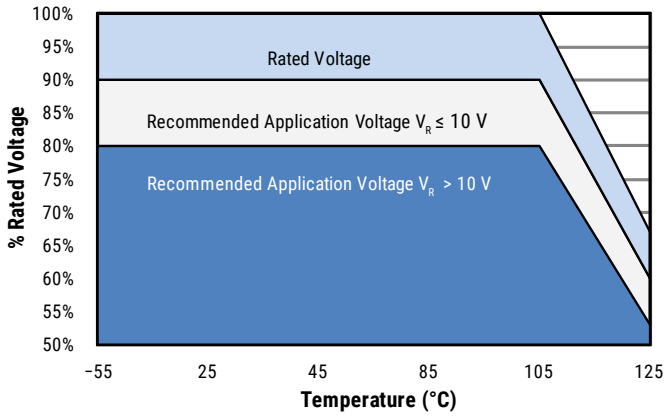

Recommended Application Voltage

KO-CAPs are solid state capacitors that demonstrate no wearout mechanism when operated within their recommended guidelines. While the KO-CAP can be operated at full rated voltage, most circuit designers seek a minimum level of assurance in long term reliability, which should be demonstrated with data. A voltage derating can provide the desired level of demonstrated reliability based on industry accepted acceleration models. Since most applications do require long term reliability, KEMET recommends that designers consider a voltage derating, according the graphic above, for the maximum steady state voltage.

Voltage Rating	Maximum Recommended Steady State Voltage	Maximum Recommended Steady State Voltage
	−55°C to 105°C	105°C to 125°C
$2\ V \leq V_R \leq 10\ V$	90% of V_R	60% of V_R,See Chart
$12.5\ V \leq V_R \leq 63\ V$	80% of V_R	54% of V_R,See Chart

V_R = Rated Voltage

Ripple Current/Ripple Voltage

Permissible AC ripple voltage and current are related to equivalent series resistance (ESR) and the power dissipation capabilities of the device. Permissible AC ripple voltage which may be applied is limited by two criteria:

a. The positive peak AC voltage plus the DC bias voltage, if any, must not exceed the DC voltage rating of the capacitor.

b. The negative peak AC voltage in combination with bias voltage, if any, must not exceed the allowable limits specified for reverse voltage.

The maximum power dissipation by case size can be determined using the table at right. The maximum power dissipation rating stated in the table must be reduced with increasing environmental operating temperatures. Refer to the table below for temperature compensation requirements.

Case Code	EIA Case Code	Maximum Power Dissipation (Pmax) mWatts at 45°C with +30°C Rise
A	3216-18	112
B	3528-20	127
C	6032-28	165
D	7343-31	255
O	7360-43	300
X	7443-43	270
Y	7343-40	263

Temperature Compensation Multipliers for Maximum Ripple Current		
T ≤ 45°C	45° C < T ≤ 85°C	85°C < T ≤ 125°C
1.00	0.70	0.25

T= Environmental Temperature

Using the Pmax of the device, the maximum allowable rms ripple current or voltage may be determined.

$I(max) = \sqrt{Pmax/R}$

$E(max) = Z\sqrt{Pmax/R}$

I = rms ripple current (amperes)
E = rms ripple voltage (volts)
Pmax = maximum power dissipation (watts)
R = ESR at specified frequency (ohms)
Z = Impedance at specified frequency (ohms)

Surge Voltage

Surge voltage is the maximum voltage (peak value) which may be applied to the capacitor.
The surge voltage must not be applied for periodic charging and discharging in the course of normal operation and cannot be part of the application voltage.
Surge voltage capability is demonstrated by application of 1,000cycles at relevant voltage at 105°C and 125°C.
The parts are charged through a 33 Ohm resistor for 30 seconds and then discharged though a 33 Ohm resistor for each cycle.

Rated Voltage (V)	Surge Voltage (V)	Category Voltage (V)	Category Surge Voltage (V)
−55°C to 105°C		up to 125°C	
2.5	3.3	1.7	2.2
6.3	8.2	4.2	5.5
10	13.0	6.7	8.7
16	20.8	10.7	13.9
20	26.0	13.4	17.4
25	32.5	16.8	21.8
35	45.5	23.5	30.5
50	65.0	33.5	43.6

Reverse Voltage

Polymer electrolytic capacitors are polar devices and may be permanently damaged or destroyed if connected in the wrong polarity. These devices will withstand a small degree of transient voltage reversal for short periods as shown in the below table.

Temperature	Permissible Transient Reverse Voltage
25°C	15% of Rated Voltage
55°C	10% of Rated Voltage
85°C	5% of Rated Voltage
105°C	3% of Rated Voltage
125°C*	1% of Rated Voltage

**For series rated to 125°C*

Table 2 – Land Dimensions/Courtyard

KEMET	Metric Size Code	Density Level A: Maximum (Most) Land Protrusion (mm)					Density Level B: Median (Nominal) Land Protrusion (mm)					Density Level C: Minimum (Least) Land Protrusion (mm)				
Case	EIA	W	L	S	V1	V2	W	L	S	V1	V2	W	L	S	V1	V2
A	3216–18	1.35	2.20	0.62	6.02	2.80	1.23	1.80	0.82	4.92	2.30	1.13	1.42	0.98	4.06	2.04
B	3528–21	2.35	2.21	0.92	6.32	4.00	2.23	1.80	1.12	5.22	3.50	2.13	1.42	1.28	4.36	3.24
C	6032–25	2.35	2.77	2.37	8.92	4.50	2.23	2.37	2.57	7.82	4.00	2.13	1.99	2.73	6.96	3.74
D	7343–31	2.55	2.77	3.67	10.22	5.60	2.43	2.37	3.87	9.12	5.10	2.33	1.99	4.03	8.26	4.84
O	7360-43	4.25	2.77	3.67	10.22	7.30	4.13	2.37	3.87	9.12	6.80	4.03	1.99	4.03	8.26	6.54
X[1]	7343–43	2.55	2.77	3.67	10.22	5.60	2.43	2.37	3.87	9.12	5.10	2.33	1.99	4.03	8.26	4.84
Y[1]	7343–40	2.55	2.77	3.67	10.22	5.60	2.43	2.37	3.87	9.12	5.10	2.33	1.99	4.03	8.26	4.84

Density Level A: *For low-density product applications. Recommended for wave solder applications and provides a wider process window for reflow solder processes.*
Density Level B: *For products with a moderate level of component density. Provides a robust solder attachment condition for reflow solder processes.*
Density Level C: *For high component density product applications. Before adapting the minimum land pattern variations the user should perform qualification testing based on the conditions outlined in IPC standard 7351 (IPC–7351).*
[1] Height of these chips may create problems in wave soldering.
[2] Land pattern geometry is too small for silkscreen outline.

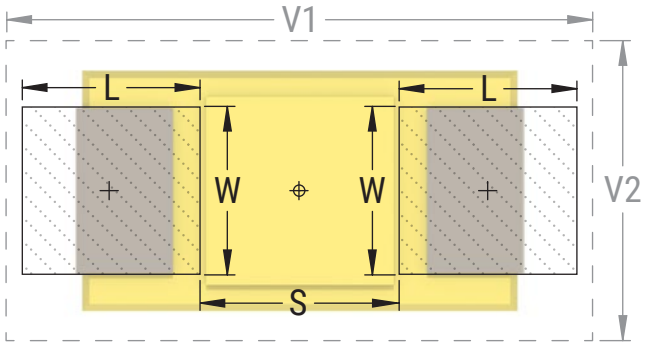

Grid Placement Courtyard

Soldering Process

KEMET's families of surface mount capacitors are compatible with wave (single or dual), convection, IR, or vapor phase reflow techniques. Preheating of these components is recommended to avoid extreme thermal stress. KEMET's recommended profile conditions for convection and IR reflow reflect the profile conditions of the IPC/J–STD–020D standard for moisture sensitivity testing. The devices can safely withstand a maximum of three reflow passes at these conditions.

Please note that although the X/7343–43 case size can withstand wave soldering, the tall profile (4.3 mm maximum) dictates care in wave process development.

Hand soldering should be performed with care due to the difficulty in process control. If performed, care should be taken to avoid contact of the soldering iron to the molded case. The iron should be used to heat the solder pad, applying solder between the pad and the termination, until reflow occurs. Once reflow occurs, the iron should be removed immediately. "Wiping" the edges of a chip and heating the top surface is not recommended.

During typical reflow operations, a slight darkening of the gold-colored epoxy may be observed. This slight darkening is normal and not harmful to the product. Marking permanency is not affected by this change.

Profile Feature	SnPb Assembly	Pb-Free Assembly
Preheat/Soak		
Temperature Minimum (T_{Smin})	100°C	150°C
Temperature Maximum (T_{Smax})	150°C	200°C
Time (t_s) from T_{smin} to T_{smax})	60 – 120 seconds	60 – 120 seconds
Ramp-up Rate (T_L to T_P)	3°C/seconds maximum	3°C/seconds maximum
Liquidous Temperature (T_L)	183°C	217°C
Time Above Liquidous (t_L)	60 – 150 seconds	60 – 150 seconds
Peak Temperature (T_P)	220°C* 235°C**	250°C* 260°C**
Time within 5°C of Maximum Peak Temperature (t_p)	20 seconds maximum	30 seconds maximum
Ramp-down Rate (T_P to T_L)	6°C/seconds maximum	6°C/seconds maximum
Time 25°C to Peak Temperature	6 minutes maximum	8 minutes maximum

Note: All temperatures refer to the center of the package, measured on the package body surface that is facing up during assembly reflow.
** For Case Size height > 2.5 mm*
*** For Case Size height ≤ 2.5 mm*

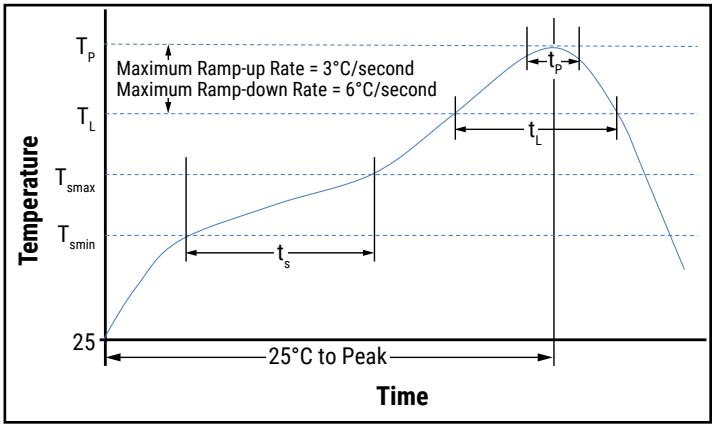

Storage

All KO-Cap Series are shipped in moisture barrier bags (MBBs) with desiccant and humidity indicator card (HIC). These parts are classified as MSL3 (Moisture Sensitivity Level 3) per IPC/JEDEC J-STD-020 and packaged per IPC/JEDEC J-STD-033.
MSL3 specifies a floor time of 168H at 30°C maximum temperature and 60% relative humidity
Unused capacitors should be sealed in a MBB with fresh desiccant.
Calculated shelf life in sealed bag:
– 12 months from bag seal date in a storage environment of < 40°C and humidity < 90% RH
– 24 months from bag seal date in a storage environment of < 30°C and humidity < 70% RH
If baking is required, refer to IPC/JEDEC J-STD-033 for bake procedure

Construction

T540

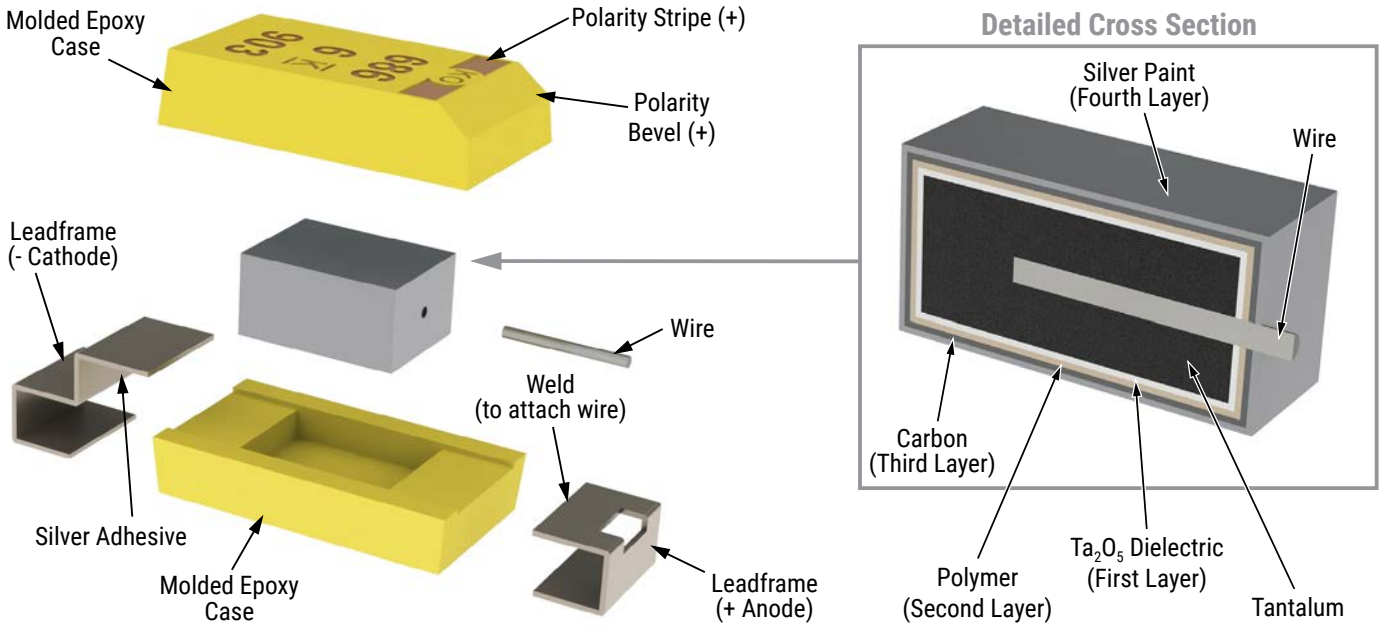

T541 - Multiple Anodes Polymer

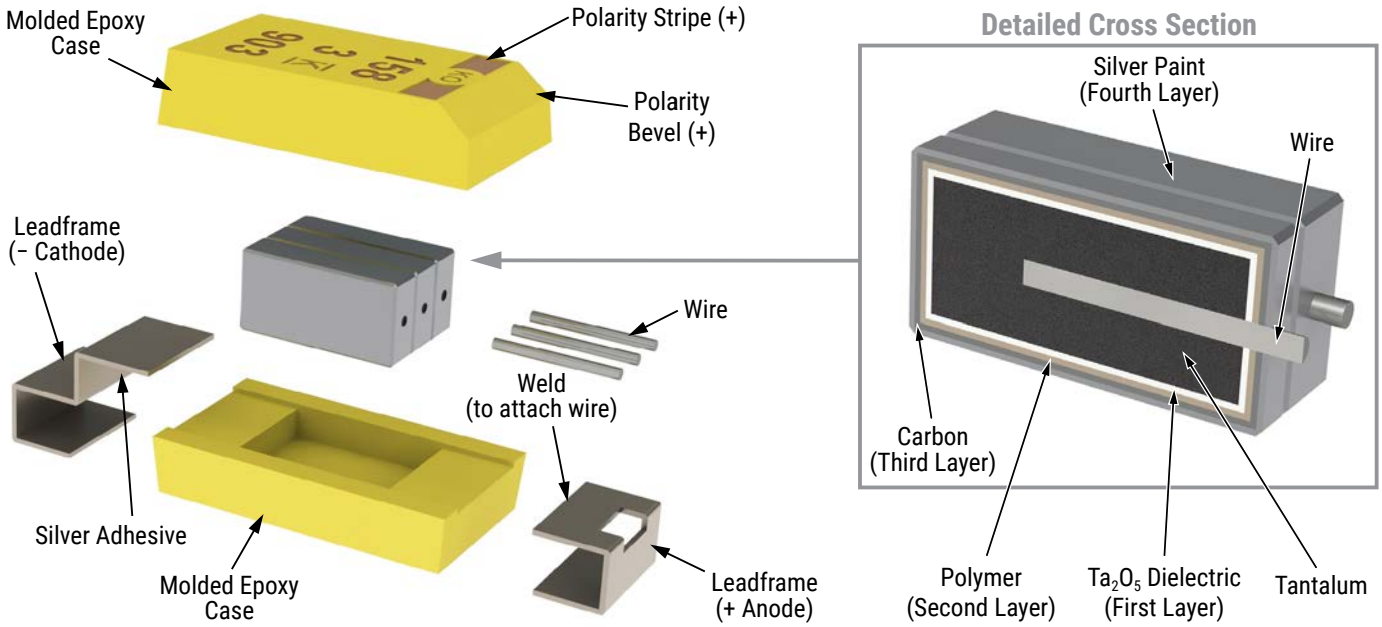

Capacitor Marking

T540

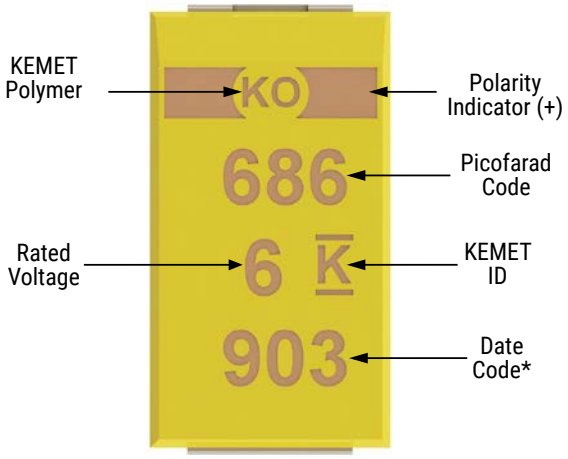

* 903 = 3rd week of 2019

T541

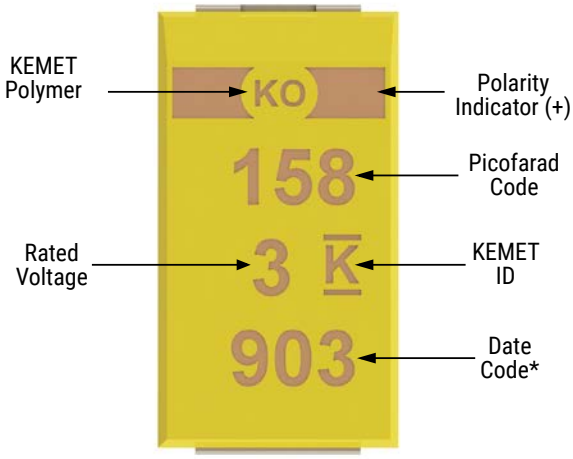

* 903 = 3rd week of 2019

Note: On parts with selected surge codes (8X) the epoxy is black.

Date Code *	
1st digit = Last number of Year	4 = 2014 5 = 2015 6 = 2016 7 = 2017 8 = 2018 9 = 2019
2nd and 3rd digit = Week of the Year	01 = 1st week of the Year to 52 = 52nd week of the Year

Tape & Reel Packaging Information

KEMET's molded chip capacitor families are packaged in 8 and 12 mm plastic tape on 7" and 13" reels in accordance with *EIA Standard 481*: Embossed Carrier Taping of Surface Mount Components for Automatic Handling. This packaging system is compatible with all tape-fed automatic pick-and-place systems.

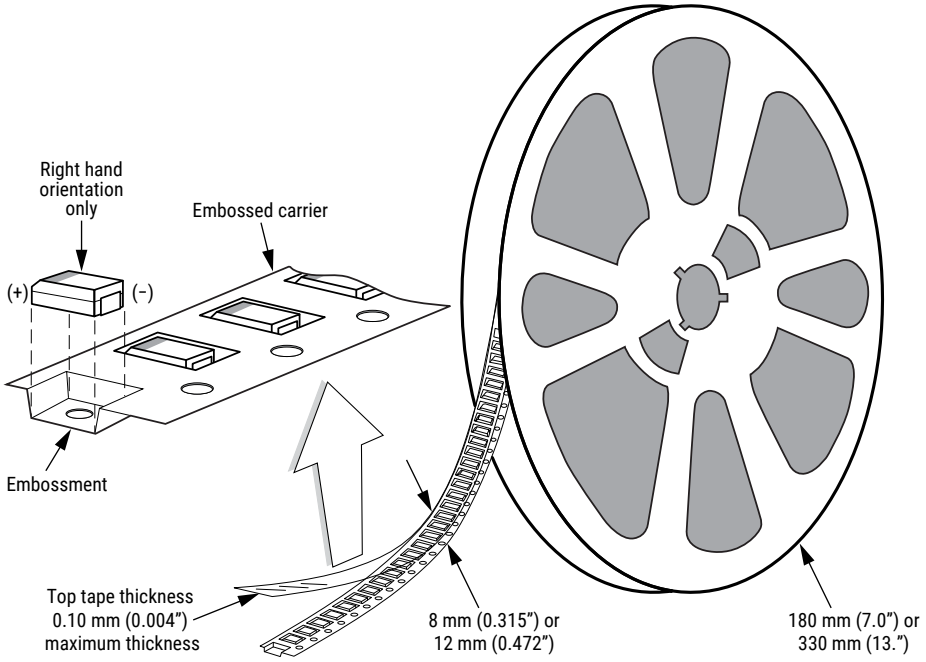

Table 3 – Packaging Quantity

Case Code		Tape Width (mm)	7" Reel*	13" Reel*
KEMET	EIA			
P	2012-10	8	3,000	N/A
R	2012-12	8	2,500	10,000
I	3216-10	8	3,000	N/A
S	3216-12	8	2,500	10,000
A	3216-18	8	2,000	N/A
T	3528-12	8	3,000	10,000
M	3528-15	8	2,500	8,000
B	3528-21	8	2,000	8,000
U	6032-15	12	1,000	5,000
L	6032-19	12	1,000	3,000
C	6032-28	12	500	3,000
Q	7343-12	12	1,000	3,000
W	7343-15	12	1,000	3,000
Z	7343-17	12	1,000	3,000
V	7343-19	12	1,000	3,000
D	7343-31	12	500	2,500
Y	7343-40	12	500	2,000
X	7343-43	12	500	2,000
J	7360-15	12	1,000	3,000
H	7360-20	12	1,000	3,000
O	7360-43	12	250	1,000

** No C-Spec required for 7" reel packaging. C-7280 required for 13" reel packaging.*

Figure 1 – Embossed (Plastic) Carrier Tape Dimensions

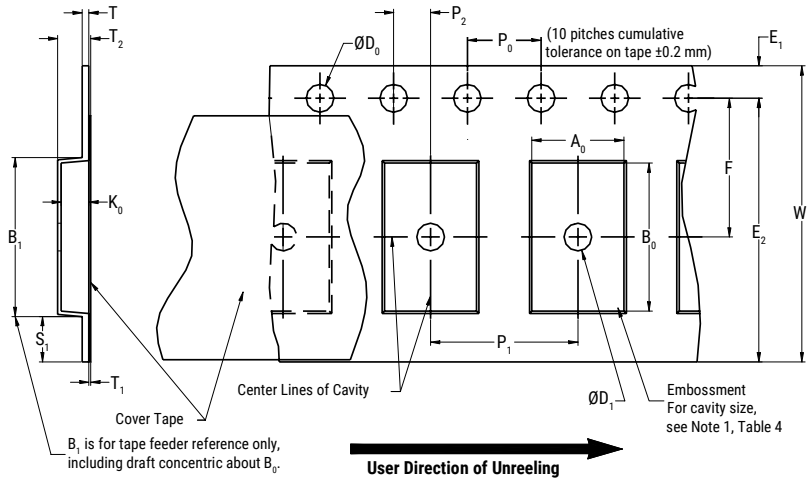

Table 4 – Embossed (Plastic) Carrier Tape Dimensions

Metric will govern

Constant Dimensions — Millimeters (Inches)									
Tape Size	D_0	D_1 Minimum Note 1	E_1	P_0	P_2	R Reference Note 2	S_1 Minimum Note 3	T Maximum	T_1 Maximum
8 mm	1.5 +0.10/−0.0 (0.059 +0.004/−0.0)	1.0 (0.039)	1.75 ±0.10 (0.069 ±0.004)	4.0 ±0.10 (0.157 ±0.004)	2.0 ±0.05 (0.079 ±0.002)	25.0 (0.984)	0.600 (0.024)	0.600 (0.024)	0.100 (0.004)
12 mm		1.5 (0.059)				30 (1.181)			

Variable Dimensions — Millimeters (Inches)								
Tape Size	Pitch	B_1 Maximum Note 4	E_2 Minimum	F	P_1	T_2 Maximum	W Maximum	A_0, B_0 & K_0
8 mm	Single (4 mm)	4.35 (0.171)	6.25 (0.246)	3.5 ±0.05 (0.138 ±0.002)	2.0 ±0.05 or 4.0 ±0.10 (0.079 ±0.002 or 0.157 ±0.004)	2.5 (0.098)	8.3 (0.327)	Note 5
12 mm	Single (4 mm) and Double (8 mm)	8.2 (0.323)	10.25 (0.404)	5.5 ±0.05 (0.217 ±0.002)	2.0 ±0.05 (0.079 ±0.002) or 4.0 ±0.10 (0.157 ±0.004) or 8.0 ±0.10 (0.315 ±0.004)	4.6 (0.181)	12.3 (0.484)	

1. *The embossment hole location shall be measured from the sprocket hole controlling the location of the embossment. Dimensions of embossment location and hole location shall be applied independent of each other.*
2. *The tape, with or without components, shall pass around R without damage (see Figure 4).*
3. *If S_1 < 1.0 mm, there may not be enough area for cover tape to be properly applied (see EIA Standard 481–D, paragraph 4.3, section b).*
4. *B_1 dimension is a reference dimension for tape feeder clearance only.*
5. *The cavity defined by A_0, B_0 and K_0 shall surround the component with sufficient clearance that:*
   (a) the component does not protrude above the top surface of the carrier tape.
   (b) the component can be removed from the cavity in a vertical direction without mechanical restriction, after the top cover tape has been removed.
   (c) rotation of the component is limited to 20° maximum for 8 and 12 mm tapes (see Figure 2).
   (d) lateral movement of the component is restricted to 0.5 mm maximum for 8 mm and 12 mm wide tape (see Figure 3).
   (e) see Addendum in EIA Standard 481–D for standards relating to more precise taping requirements.

Packaging Information Performance Notes

1. Cover tape break force: 1.0 kg minimum.
2. Cover tape peel strength: The total peel strength of the cover tape from the carrier tape shall be:

Tape Width	Peel Strength
8 mm	0.1 to 1.0 newton (10 to 100 gf)
12 mm	0.1 to 1.3 newton (10 to 130 gf)

The direction of the pull shall be opposite the direction of the carrier tape travel. The pull angle of the carrier tape shall be 165° to 180° from the plane of the carrier tape. During peeling, the carrier and/or cover tape shall be pulled at a velocity of 300 ±10 mm/minute.
3. Labeling: Bar code labeling (standard or custom) shall be on the side of the reel opposite the sprocket holes. *Refer to EIA Standards 556 and 624*.

Figure 2 – Maximum Component Rotation

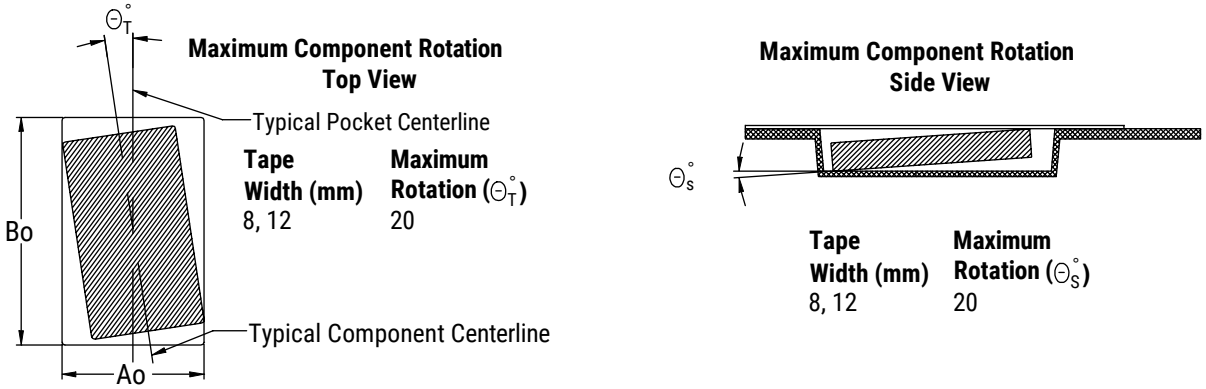

Figure 3 – Maximum Lateral Movement

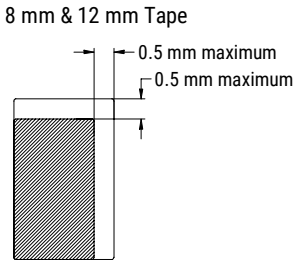

Figure 4 – Bending Radius

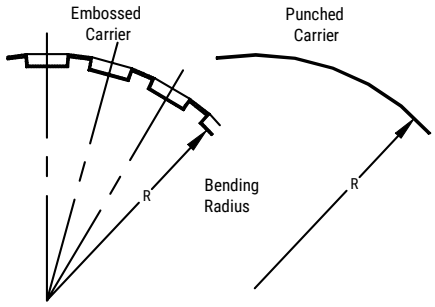

Figure 5 – Reel Dimensions

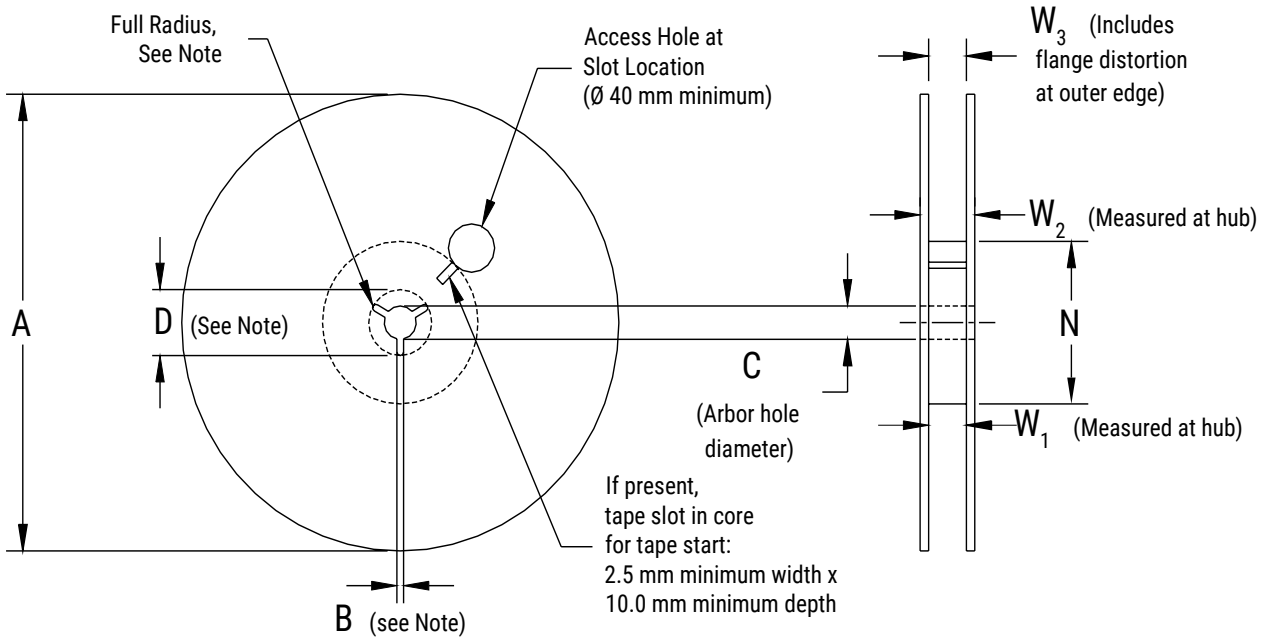

Note: Drive spokes optional; if used, dimensions B and D shall apply.

Table 5 – Reel Dimensions

Metric will govern

Constant Dimensions — Millimeters (Inches)				
Tape Size	A	B Minimum	C	D Minimum
8 mm	178 ±0.20 (7.008 ±0.008) or 330 ±0.20 (13.000 ±0.008)	1.5 (0.059)	13.0 +0.5/−0.2 (0.521 +0.02/−0.008)	20.2 (0.795)
12 mm				

Variable Dimensions — Millimeters (Inches)				
Tape Size	N Minimum	W_1	W_2 Maximum	W_3
8 mm	50 (1.969)	8.4 +1.5/−0.0 (0.331 +0.059/−0.0)	14.4 (0.567)	Shall accommodate tape width without interference
12 mm		12.4 +2.0/−0.0 (0.488 +0.078/−0.0)	18.4 (0.724)	

Figure 6 – Tape Leader & Trailer Dimensions

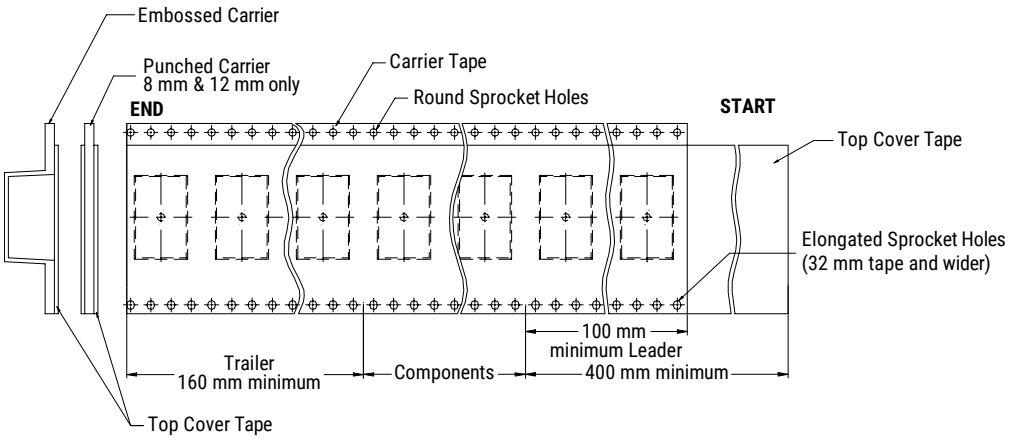

Figure 7 – Maximum Camber

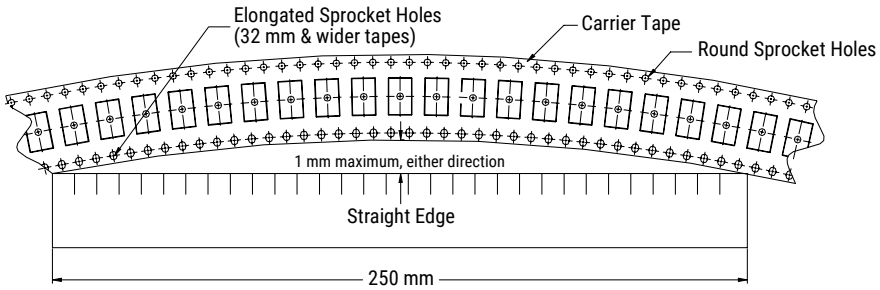

KEMET Electronics Corporation Sales Offices

For a complete list of our global sales offices, please visit www.kemet.com/sales.

Disclaimer

All product specifications, statements, information and data (collectively, the "Information") in this datasheet are subject to change. The customer is responsible for checking and verifying the extent to which the Information contained in this publication is applicable to an order at the time the order is placed. All Information given herein is believed to be accurate and reliable, but it is presented without guarantee, warranty, or responsibility of any kind, expressed or implied.

Statements of suitability for certain applications are based on KEMET Electronics Corporation's ("KEMET") knowledge of typical operating conditions for such applications, but are not intended to constitute – and KEMET specifically disclaims – any warranty concerning suitability for a specific customer application or use. The Information is intended for use only by customers who have the requisite experience and capability to determine the correct products for their application. Any technical advice inferred from this Information or otherwise provided by KEMET with reference to the use of KEMET's products is given gratis, and KEMET assumes no obligation or liability for the advice given or results obtained.

Although KEMET designs and manufactures its products to the most stringent quality and safety standards, given the current state of the art, isolated component failures may still occur. Accordingly, customer applications which require a high degree of reliability or safety should employ suitable designs or other safeguards (such as installation of protective circuitry or redundancies) in order to ensure that the failure of an electrical component does not result in a risk of personal injury or property damage.

Although all product–related warnings, cautions and notes must be observed, the customer should not assume that all safety measures are indicted or that other measures may not be required.

KEMET is a registered trademark of KEMET Electronics Corporation.

OCEAN CHIPS
Океан Электроники
Поставка электронных компонентов

Компания «Океан Электроники» предлагает заключение долгосрочных отношений при поставках импортных электронных компонентов на взаимовыгодных условиях!

Наши преимущества:

- Поставка оригинальных импортных электронных компонентов напрямую с производств Америки, Европы и Азии, а так же с крупнейших складов мира;
- Широкая линейка поставок активных и пассивных импортных электронных компонентов (более 30 млн. наименований);
- Поставка сложных, дефицитных, либо снятых с производства позиций;
- Оперативные сроки поставки под заказ (от 5 рабочих дней);
- Экспресс доставка в любую точку России;
- Помощь Конструкторского Отдела и консультации квалифицированных инженеров;
- Техническая поддержка проекта, помощь в подборе аналогов, поставка прототипов;
- Поставка электронных компонентов под контролем ВП;
- Система менеджмента качества сертифицирована по Международному стандарту ISO 9001;
- При необходимости вся продукция военного и аэрокосмического назначения проходит испытания и сертификацию в лаборатории (по согласованию с заказчиком);
- Поставка специализированных компонентов военного и аэрокосмического уровня качества (Xilinx, Altera, Analog Devices, Intersil, Interpoint, Microsemi, Actel, Aeroflex, Peregrine, VPT, Syfer, Eurofarad, Texas Instruments, MS Kennedy, Miteq, Cobham, E2V, MA-COM, Hittite, Mini-Circuits, General Dynamics и др.);

Компания «Океан Электроники» является официальным дистрибьютором и эксклюзивным представителем в России одного из крупнейших производителей разъемов военного и аэрокосмического назначения **«JONHON»**, а так же официальным дистрибьютором и эксклюзивным представителем в России производителя высокотехнологичных и надежных решений для передачи СВЧ сигналов **«FORSTAR»**.

AVIC JONHON

«JONHON» (основан в 1970 г.)

Разъемы специального, военного и аэрокосмического назначения:

(Применяются в военной, авиационной, аэрокосмической, морской, железнодорожной, горно- и нефтедобывающей отраслях промышленности)

«FORSTAR» (основан в 1998 г.)

ВЧ соединители, коаксиальные кабели, кабельные сборки и микроволновые компоненты:

(Применяются в телекоммуникациях гражданского и специального назначения, в средствах связи, РЛС, а так же военной, авиационной и аэрокосмической отраслях промышленности).

FORSTAR®

Телефон: 8 (812) 309-75-97 (многоканальный)
Факс: 8 (812) 320-03-32
Электронная почта: ocean@oceanchips.ru
Web: http://oceanchips.ru/
Адрес: 198099, г. Санкт-Петербург, ул. Калинина, д. 2, корп. 4, лит. А