TS274

High performance CMOS quad operational amplifier

Features

- Output voltage can swing to ground
- Excellent phase margin on capacitive loads
- Gain bandwidth product: 3.5 MHz
- Unity gain stable
- Two input offset voltage selections

Description

The TS274 devices are low cost, quad operational amplifiers designed to operate with single or dual supplies. These operational amplifiers use the ST silicon gate CMOS process giving an excellent consumption-speed ratio. These series are ideally suited for low consumption applications.

Three power consumptions are available thus offering the best consumption-speed ratio for your application:

- I_{CC} = 10 µA/amp: TS27L4 (very low power)
- I_{CC} = 150 µA/amp: TS27M4 (low power)
- I_{CC} = 1 mA/amp: TS274 (standard)

These CMOS amplifiers offer very high input impedance and extremely low input currents. The major advantage versus JFET devices is the very low input currents drift with temperature (see *Figure 5 on page 6*).

For enhanced features of TS274, in particular rail-to-rail capability and low offset voltage, two new families, TSV91x and TSV99x will better suit low voltage applications.

DIP14
(Plastic package)

SO-14
(Plastic micropackage)

TSSOP14
(Thin shrink small outline package**)**

Pin connections (top view)

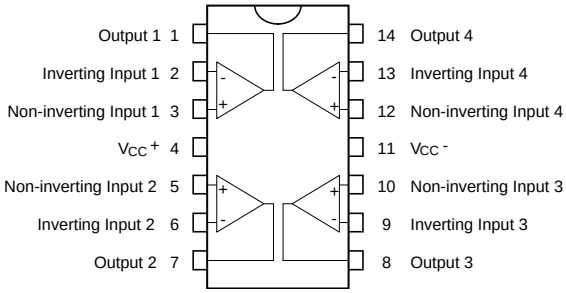

Table 1. Enhanced related families

Part number	V_{CC} range (V)	Rail-to-rail I/O	V_{io} max (mV)	I_{ib} max (pA)	A_{vd} min (dB)	I_{CC} max (mA)	GBP typ (MHz)	SR typ (V/µs)	Packages
TSV914	2.5 - 5.5	I/O	1.5/4.5	10	80	1.1	8	4.5	SO-14, TSSOP14
TSV994	2.5 - 5.5	I/O	1.5/4.5	10	80	1.1	20 (G ≥3)	10	SO-14, TSSOP14

1 Absolute maximum ratings and operating conditions

Table 2. Absolute maximum ratings (AMR)

Symbol	Parameter	TS274C/AC	TS274I/AI	Unit
V_{CC}^+	Supply voltage (1)	18		V
V_{id}	Differential input voltage (2)	±18		V
V_{in}	Input voltage (3)	-0.3 to 18		V
I_o	Output current for $V_{CC}^+ \geq 15V$	±30		mA
I_{in}	Input current	±5		mA
T_{oper}	Operating free-air temperature range	0 to +70	-40 to +125	°C
T_{stg}	Storage temperature range	-65 to +150		°C
R_{thja}	Thermal resistance junction to ambient(4) SO-14 TSSOP14 DIP14	 103 100 80		°C/W
R_{thjc}	Thermal resistance junction to case SO-14 TSSOP14 DIP14	 31 32 33		°C/W
ESD	HBM: human body model(5)	500		V
	MM: machine model(6)	100		V
	CDM: charged device model(7)	800		V

1. All values, except differential voltage are with respect to network ground terminal.
2. Differential voltages are the non-inverting input terminal with respect to the inverting input terminal.
3. The magnitude of the input and the output voltages must never exceed the magnitude of the positive supply voltage.
4. Short-circuits can cause excessive heating and destructive dissipation. Values are typical.
5. Human body model: A 100pF capacitor is charged to the specified voltage, then discharged through a 1.5kΩ resistor between two pins of the device. This is done for all couples of connected pin combinations while the other pins are floating.
6. Machine model: A 200pF capacitor is charged to the specified voltage, then discharged directly between two pins of the device with no external series resistor (internal resistor < 5Ω). This is done for all couples of connected pin combinations while the other pins are floating.
7. Charged device model: all pins and the package are charged together to the specified voltage and then discharged directly to the ground through only one pin. This is done for all pins.

Table 3. Operating conditions

Symbol	Parameter	Value	Unit
V_{CC}^+	Supply voltage	3 to 16	V
V_{icm}	Common mode input voltage range	0 to V_{CC}^+ - 1.5	V
T_{oper}	Operating free-air temperature range TS274C TS274I	 0 to 70 -40 to 125	°C

2 Block diagram and circuit schematics

Figure 1. Block diagram

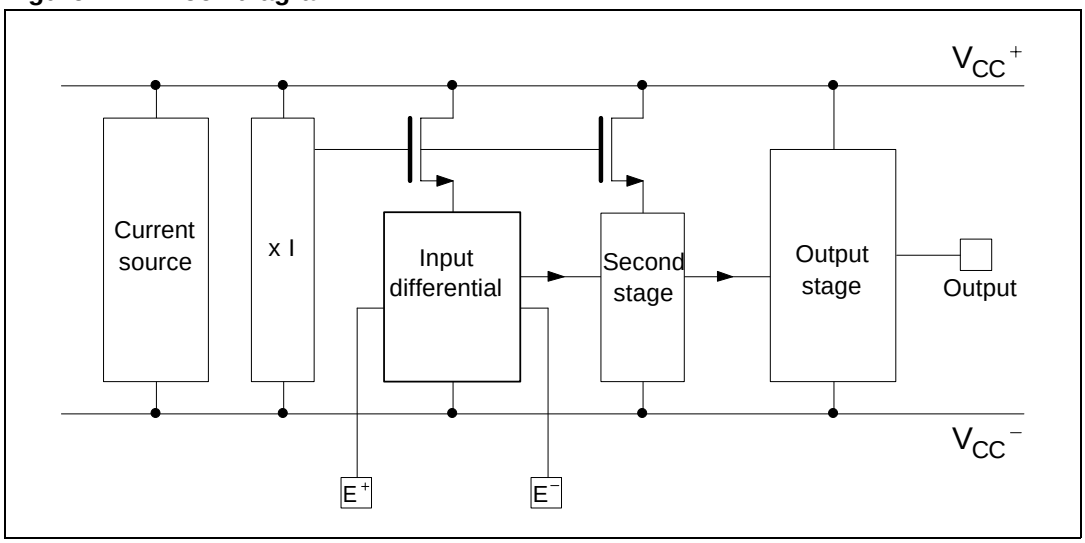

Figure 2. Schematic diagram (for 1/4 TS274)

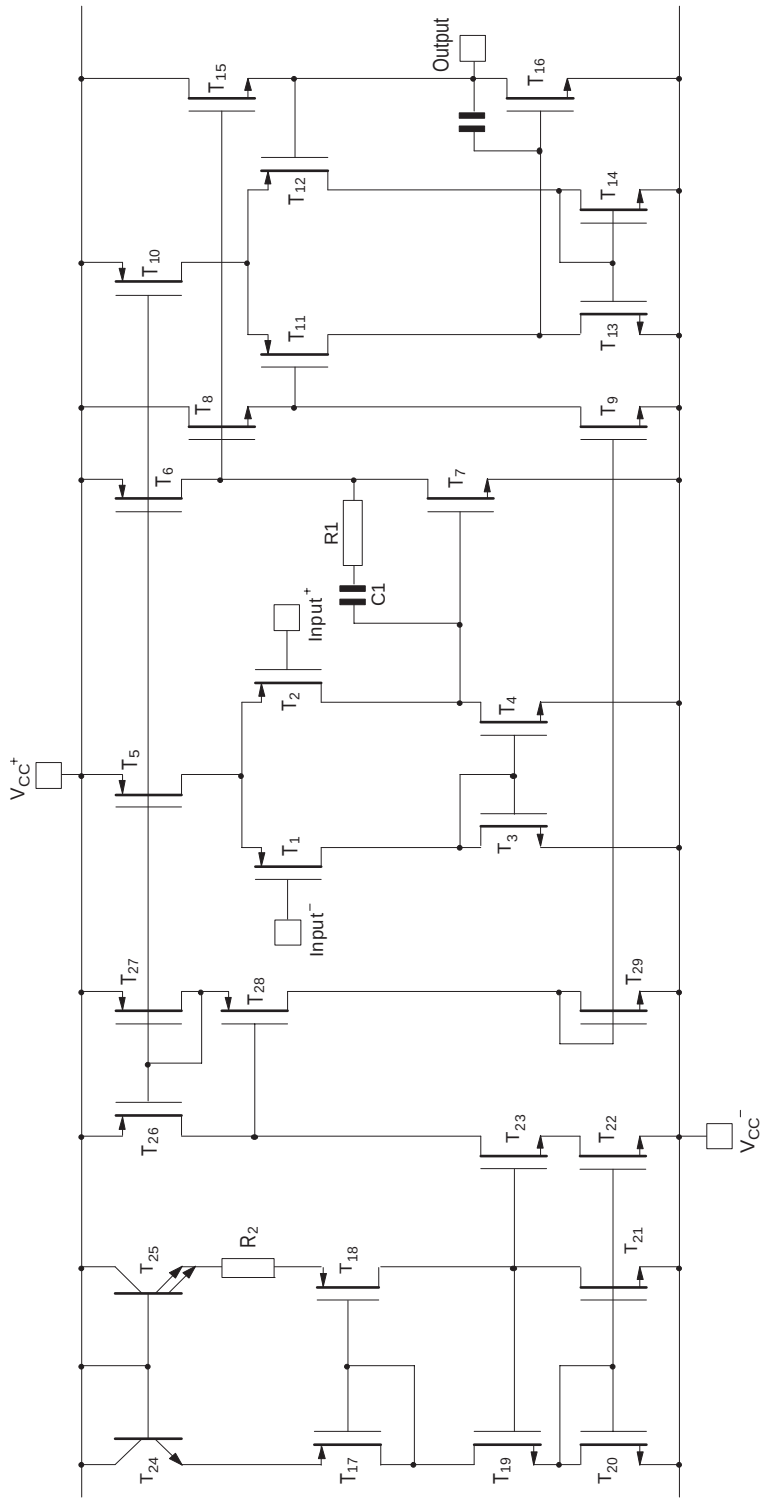

3 Electrical characteristics

Table 4. V_{CC}^{+} = +10V, V_{CC}^{-}= 0V, T_{amb} = +25°C (unless otherwise specified)

Symbol	Parameter	Conditions	TS274C/AC			TS274I/AI			Unit
			Min	Typ	Max	Min	Typ	Max	
V_{io}	Input offset voltage	V_o = 1.4V, V_{ic} = 0V TS274C/I TS274AC/AI		1.1 0.9	10 5		1.1 0.9	10 5	mV
		$T_{min} \leq T_{amb} \leq T_{max}$ TS274C/I TS274AC/AI			12 6.5			12 6.5	mV
DV_{io}	Input offset voltage drift			2			2		µV/°C
I_{io}	Input offset current (1)	V_{ic} = 5V, V_o = 5V $T_{min} \leq T_{amb} \leq T_{max}$		1	 100		1	 200	pA
I_{ib}	Input bias current (1)	V_{ic} = 5V, V_o = 5V $T_{min} \leq T_{amb} \leq T_{max}$		1	 150		1	 300	pA
V_{OH}	High level output voltage	V_{id} = 100mV, R_L = 10kΩ $T_{min} \leq T_{amb} \leq T_{max}$	8.2 8.1	8.4		8.2 8	8.4		V
V_{OL}	Low level output voltage	V_{id} = -100mV			50			50	mV
A_{vd}	Large signal voltage gain	V_{iC} = 5V, R_L = 10kΩ, V_o = 1V to 6V $T_{min} \leq T_{amb} \leq T_{max}$	10 7	15		10 6	15		V/mV
GBP	Gain bandwidth product	A_v = 40dB, R_L = 10kΩ, C_L = 100pF, f_{in} = 100kHz		3.5			3.5		MHz
CMR	Common mode rejection ratio	V_{ic} = 1V to 7.4V, V_o = 1.4V	65	80		65	80		dB
SVR	Supply voltage rejection ratio	V_{CC}^{+} = 5V to 10V, V_o = 1.4V	60	70		60	70		dB
I_{CC}	Supply current (per amplifier)	A_v = 1, no load, V_o = 5V $T_{min} \leq T_{amb} \leq T_{max}$		1000	1500 1600		1000	1500 1700	µA
I_o	Output short circuit current	V_o = 0V, V_{id} = 100mV		60			60		mA
I_{sink}	Output sink current	V_o = V_{CC}, V_{id} = -100mV		45			45		mA
SR	Slew rate at unity gain	R_L = 10kΩ, C_L = 100pF, V_{in} = 3 to 7V		5.5			5.5		V/µs
ϕm	Phase margin at unity gain	A_v = 40dB, R_L = 10kΩ, C_L = 100pF		40			40		Degrees
K_{OV}	Overshoot factor			30			30		%
e_n	Equivalent input noise voltage	f = 1kHz, R_S = 100Ω		30			30		nV/√Hz
V_{o1}/V_{o2}	Channel separation			120			120		dB

1. Maximum values including unavoidable inaccuracies of the industrial test.

Figure 3. Supply current (each amplifier) vs. supply voltage

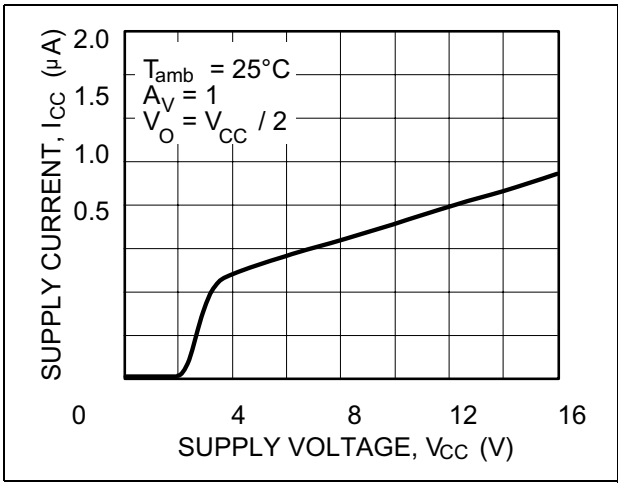

Figure 4. High level output voltage vs. high level output current

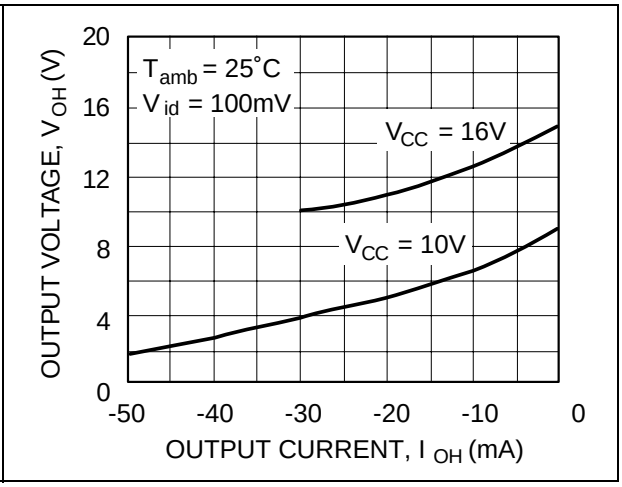

Figure 5. Input bias current vs. free-air temperature

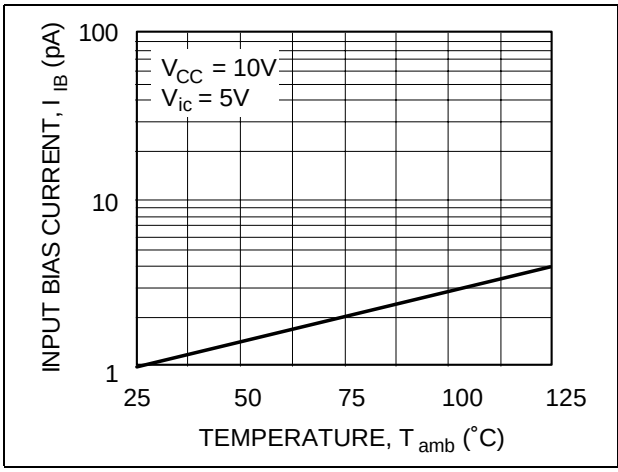

Figure 6. Low level output voltage vs. low level output current

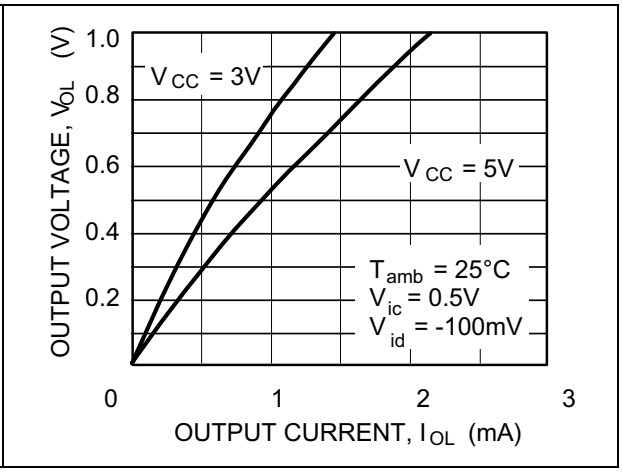

Figure 7. High level output voltage vs. high level output current

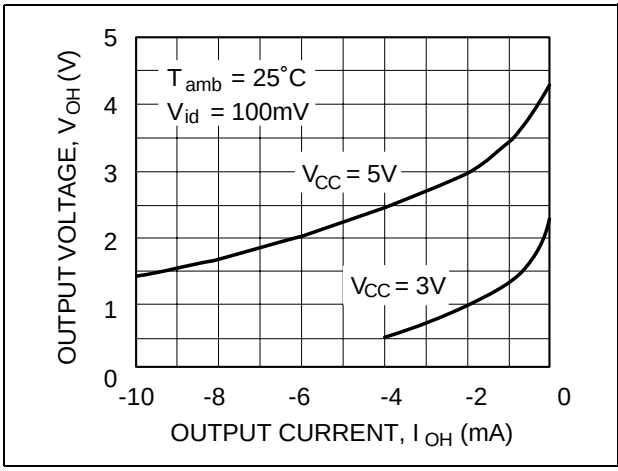

Figure 8. Low level output voltage vs. low level output current

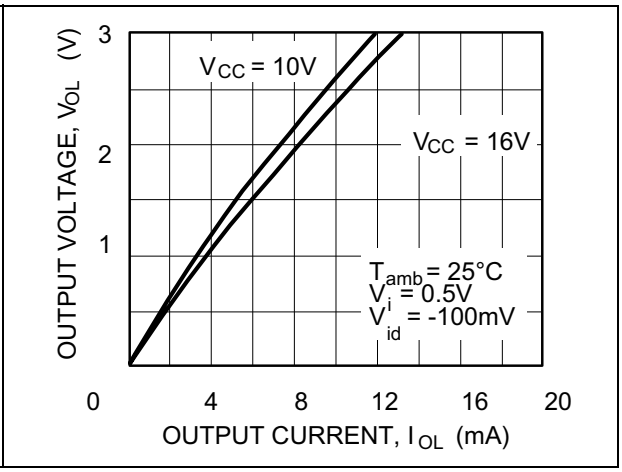

Figure 9. Open loop frequency response and phase shift

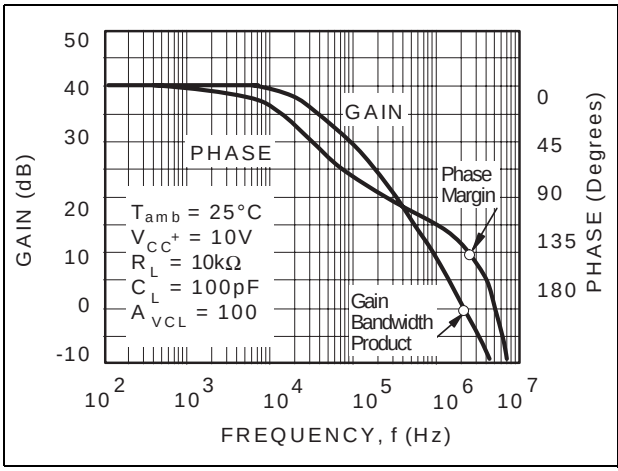

Figure 10. Phase margin vs. capacitive load

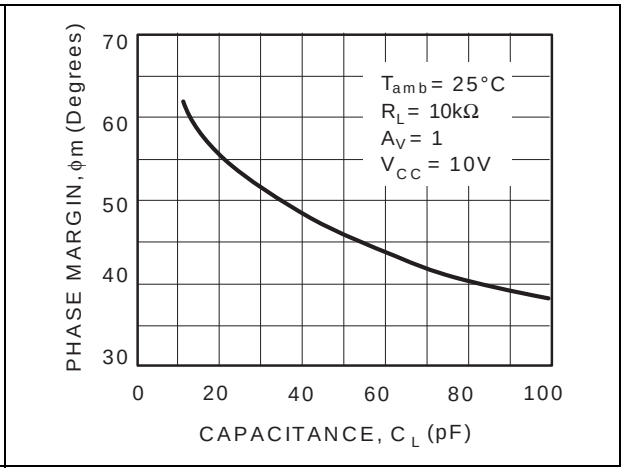

Figure 11. Gain bandwidth product vs. supply voltage

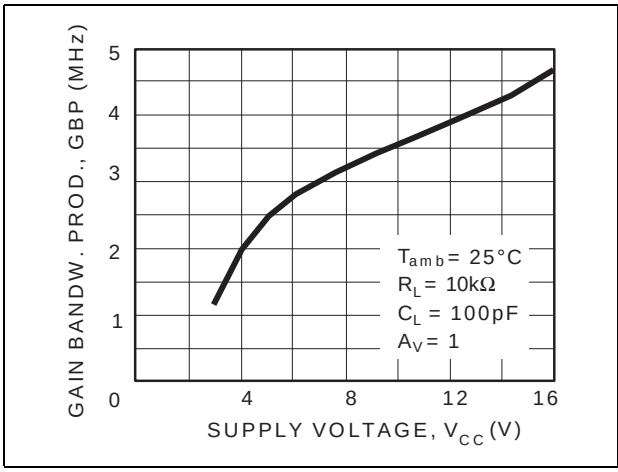

Figure 12. Slew rate vs. supply voltage

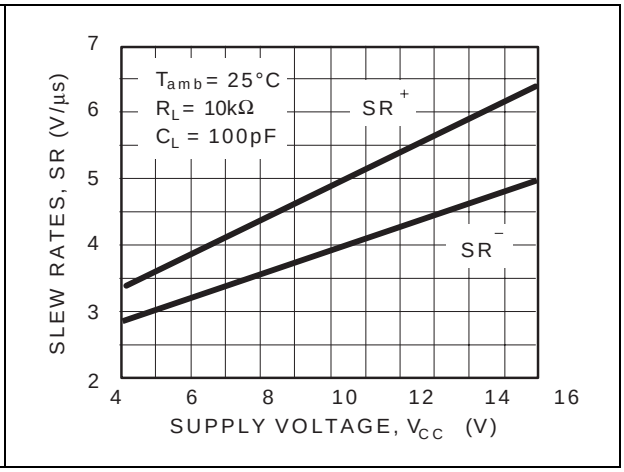

Figure 13. Phase margin vs. supply voltage

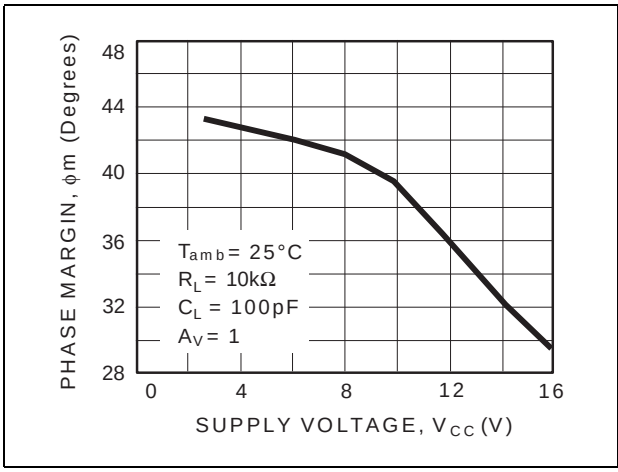

Figure 14. Input voltage noise vs. frequency

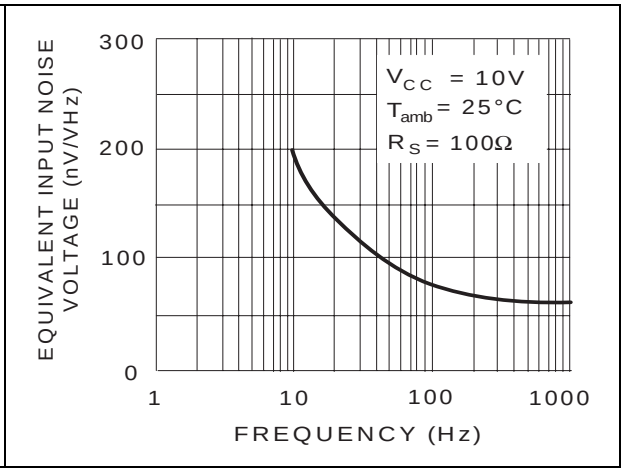

4 Macromodel

4.1 Important note concerning this macromodel

Please consider the following remarks before using this macromodel.

- All models are a trade-off between accuracy and complexity (i.e. simulation time).
- Macromodels are not a substitute to breadboarding; rather, they confirm the validity of a design approach and help to select surrounding component values.
- A macromodel emulates the **nominal** performance of a **typical** device within **specified operating conditions** (temperature, supply voltage, for example). Thus the macromodel is often not as exhaustive as the datasheet, its purpose is to illustrate the main parameters of the product.

Data derived from macromodels used outside of the specified conditions (V_{CC}, temperature, for example) or even worse, outside of the device operating conditions (V_{CC}, V_{icm}, for example), is not reliable in any way.

4.2 Macromodel code

```
********************************
.SUBCKT TS27X 1 2 3 4 5
*** INP- = 1, INP+ =2, OUT = 3 VDD=4 VSS = 5
*** TYPE = TS271/TS272/TS274
.MODEL MDTH D IS=1E-8 KF=2.664E-16 CJO=10F
***INPUT STAGE
CIP 2 5 1E-12
CIN 1 5 1E-12
EIP 10 5 2 5 1
EIN 16 5 1 5 1
RIP 10 11 8
RIN 15 16 8
RIS 11 15 223.84
CPS 11 15 1E-9
DIP 11 120 MDTH 400E-12
DIN 15 140 MDTH 400E-12
RDEG1 12 120 4400
RDEG2 14 140 4400
VOFP 12 13 DC 0
VOFN 13 14 DC 0
IPOL 13 5 38E-6
***ICC
DICC1 4 31 MDTH 400E-12
DICC2 31 32 MDTH 400E-12
DICC3 32 33 MDTH 400E-12
DICC4 33 34 MDTH 400E-12
RICC 34 5 20E3
ICC 4 5 600E-6
***COMMON MODE INPUT LIMITATION
DINN 17 13 MDTH 400E-12
VIN 17 5 DC -0.1
```

```
DINR 15 18 MDTH 400E-12
VIP 4 18 DC 2.2
***GM1 STAGE
FGM1P 119 5 VOFP 1
FGM1N 119 5 VOFN 1
RAP 119 4 1E6
RAN 119 5 1E6
***GM2 STAGE
G2P 19 5 119 5 4E-4
G2N 19 5 119 4 4E-4
R2P 19 4 450E3
R2N 19 5 450E3
***COMPENSATION
CC 19 119 7p
***BUFFER
EBUF 20 5 19 5 1
***SHORT-CIRCUIT LIMITATIONS( ISINK, ISOURCE)
DOPM 19 22 MDTH 400E-12
DONM 21 19 MDTH 400E-12
HOPM 22 28 VOUT 910
VIPM 28 4 DC 50
HONM 21 27 VOUT 1222
VINM 5 27 DC 50
VOUT 3 23 DC 0
***VOH, VOL DEFINITIONS
DOP 19 25 MDTH 400E-12
VOP 4 25 2.5
DON 24 19 MDTH 400E-12
VON 24 5 0.92
***OUTPUT RESISTOR
ROUT 23 20 10
.ENDS
```

5 Package information

In order to meet environmental requirements, ST offers these devices in ECOPACK® packages. These packages have a lead-free second level interconnect. The category of second level interconnect is marked on the package and on the inner box label, in compliance with JEDEC Standard JESD97. The maximum ratings related to soldering conditions are also marked on the inner box label. ECOPACK is an ST trademark. ECOPACK specifications are available at: www.st.com.

5.1 DIP14 package information

Figure 15. DIP14 package mechanical drawing

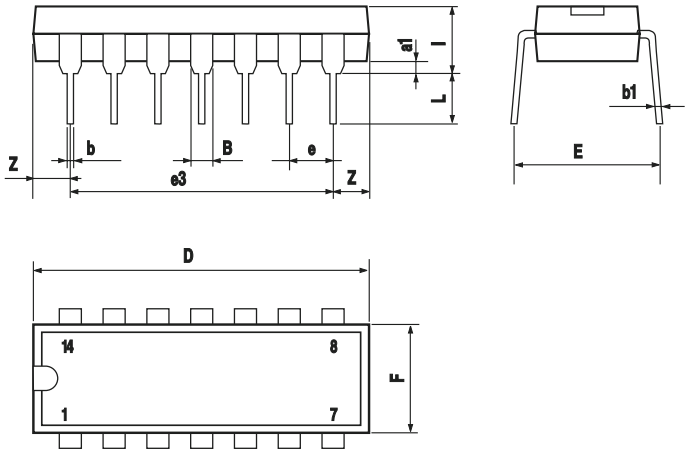

Table 5. DIP14 package mechanical data

Ref.	Millimeters			Inches		
	Min.	Typ.	Max.	Min.	Typ.	Max.
a1	0.51			0.020		
B	1.39		1.65	0.055		0.065
b		0.5			0.020	
b1		0.25			0.010	
D			20			0.787
E		8.5			0.335	
e		2.54			0.100	
e3		15.24			0.600	
F			7.1			0.280
I			5.1			0.201
L		3.3			0.130	
Z	1.27		2.54	0.050		0.100

5.2 SO-14 package information

Figure 16. SO-14 package mechanical drawing

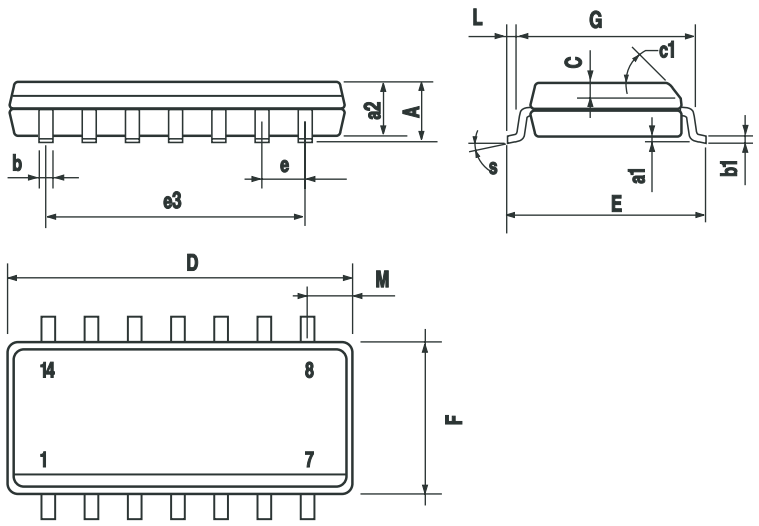

Table 6. SO-14 package mechanical data

Ref.	Dimensions					
	Millimeters			Inches		
	Min.	Typ.	Max.	Min.	Typ.	Max.
A			1.75			0.068
a1	0.1		0.2	0.003		0.007
a2			1.65			0.064
b	0.35		0.46	0.013		0.018
b1	0.19		0.25	0.007		0.010
C		0.5			0.019	
c1	45° (typ.)					
D	8.55		8.75	0.336		0.344
E	5.8		6.2	0.228		0.244
e		1.27			0.050	
e3		7.62			0.300	
F	3.8		4.0	0.149		0.157
G	4.6		5.3	0.181		0.208
L	0.5		1.27	0.019		0.050
M			0.68			0.026
S	8° (max.)					

5.3 TSSOP14 package information

Figure 17. TSSOP14 package mechanical drawing

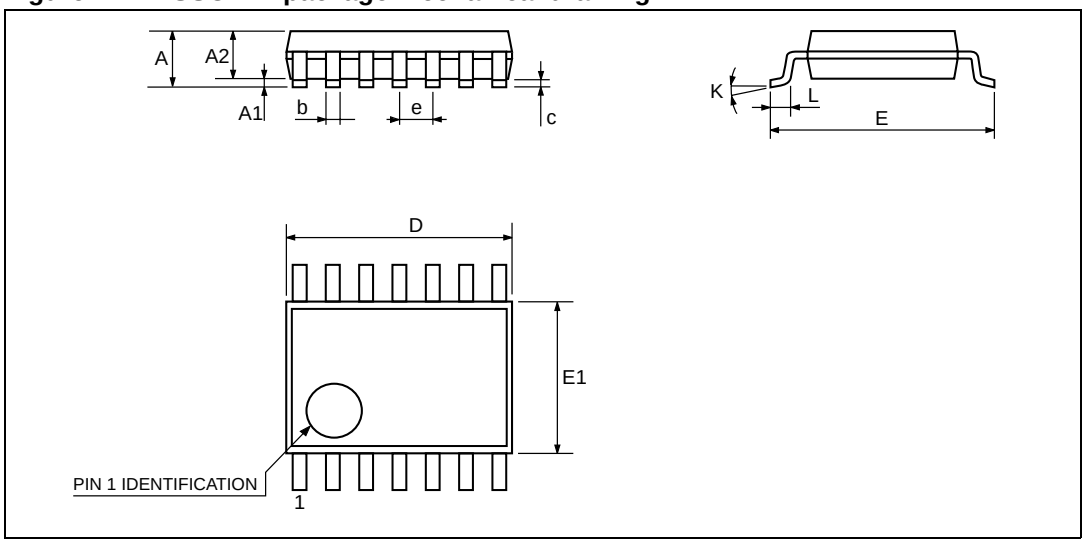

Figure 18. TSSOP14 package mechanical data

Ref.	Dimensions					
	Millimeters			Inches		
	Min.	Typ.	Max.	Min.	Typ.	Max.
A			1.2			0.047
A1	0.05		0.15	0.002	0.004	0.006
A2	0.8	1	1.05	0.031	0.039	0.041
b	0.19		0.30	0.007		0.012
c	0.09		0.20	0.004		0.0089
D	4.9	5	5.1	0.193	0.197	0.201
E	6.2	6.4	6.6	0.244	0.252	0.260
E1	4.3	4.4	4.48	0.169	0.173	0.176
e		0.65 BSC			0.0256 BSC	
K	0°		8°	0°		8°
L1	0.45	0.60	0.75	0.018	0.024	0.030

6 Ordering information

Table 7. Order codes

Order code	Temperature range	Package	Packing	Marking
TS274CD TS274CDT	0°C, +70°C	SO-14	Tube or Tape & reel	274C
TS274ACD TS274ACDT				274AC
TS274CN TS274ACN		DIP14	Tube	TS274CN
				TS274ACN
TS274CPT TS274ACPT		TSSOP14	Tape & reel	274C
				274AC
TS274ID TS274IDT	-40°C, +125°C	SO-14	Tube or Tape & reel	274I
TS274AID TS274AIDT				274AI
TS274IN TS274AIN		DIP14	Tube	TS274IN
				TS274AIN
TS274IPT TS274AIPT		TSSOP14	Tape & reel	274I
				274AI

7 Revision history

Table 8. Document revision history

Date	Revision	Changes
19-Nov-2001	1	Initial release.
07-Apr-2006	2	ESD protection inserted in *Table 2. on page 2.* Thermal resistance junction to case information added see *Table 2. on page 2*. Macromodel insertion in *Section 4 on page 8.*
01-Feb-2008	3	Added information on enhanced related families of devices on cover page. Removed TS274B version in AMR table and in order codes table.

Please Read Carefully:

Information in this document is provided solely in connection with ST products. STMicroelectronics NV and its subsidiaries (“ST”) reserve the right to make changes, corrections, modifications or improvements, to this document, and the products and services described herein at any time, without notice.

All ST products are sold pursuant to ST’s terms and conditions of sale.

Purchasers are solely responsible for the choice, selection and use of the ST products and services described herein, and ST assumes no liability whatsoever relating to the choice, selection or use of the ST products and services described herein.

No license, express or implied, by estoppel or otherwise, to any intellectual property rights is granted under this document. If any part of this document refers to any third party products or services it shall not be deemed a license grant by ST for the use of such third party products or services, or any intellectual property contained therein or considered as a warranty covering the use in any manner whatsoever of such third party products or services or any intellectual property contained therein.

UNLESS OTHERWISE SET FORTH IN ST’S TERMS AND CONDITIONS OF SALE ST DISCLAIMS ANY EXPRESS OR IMPLIED WARRANTY WITH RESPECT TO THE USE AND/OR SALE OF ST PRODUCTS INCLUDING WITHOUT LIMITATION IMPLIED WARRANTIES OF MERCHANTABILITY, FITNESS FOR A PARTICULAR PURPOSE (AND THEIR EQUIVALENTS UNDER THE LAWS OF ANY JURISDICTION), OR INFRINGEMENT OF ANY PATENT, COPYRIGHT OR OTHER INTELLECTUAL PROPERTY RIGHT.

UNLESS EXPRESSLY APPROVED IN WRITING BY AN AUTHORIZED ST REPRESENTATIVE, ST PRODUCTS ARE NOT RECOMMENDED, AUTHORIZED OR WARRANTED FOR USE IN MILITARY, AIR CRAFT, SPACE, LIFE SAVING, OR LIFE SUSTAINING APPLICATIONS, NOR IN PRODUCTS OR SYSTEMS WHERE FAILURE OR MALFUNCTION MAY RESULT IN PERSONAL INJURY, DEATH, OR SEVERE PROPERTY OR ENVIRONMENTAL DAMAGE. ST PRODUCTS WHICH ARE NOT SPECIFIED AS "AUTOMOTIVE GRADE" MAY ONLY BE USED IN AUTOMOTIVE APPLICATIONS AT USER’S OWN RISK.

Resale of ST products with provisions different from the statements and/or technical features set forth in this document shall immediately void any warranty granted by ST for the ST product or service described herein and shall not create or extend in any manner whatsoever, any liability of ST.

ST and the ST logo are trademarks or registered trademarks of ST in various countries.

Information in this document supersedes and replaces all information previously supplied.

The ST logo is a registered trademark of STMicroelectronics. All other names are the property of their respective owners.

© 2008 STMicroelectronics - All rights reserved

STMicroelectronics group of companies

Australia - Belgium - Brazil - Canada - China - Czech Republic - Finland - France - Germany - Hong Kong - India - Israel - Italy - Japan - Malaysia - Malta - Morocco - Singapore - Spain - Sweden - Switzerland - United Kingdom - United States of America

www.st.com

OCEAN CHIPS
Океан Электроники
Поставка электронных компонентов

Компания «Океан Электроники» предлагает заключение долгосрочных отношений при поставках импортных электронных компонентов на взаимовыгодных условиях!

Наши преимущества:

- Поставка оригинальных импортных электронных компонентов напрямую с производств Америки, Европы и Азии, а так же с крупнейших складов мира;
- Широкая линейка поставок активных и пассивных импортных электронных компонентов (более 30 млн. наименований);
- Поставка сложных, дефицитных, либо снятых с производства позиций;
- Оперативные сроки поставки под заказ (от 5 рабочих дней);
- Экспресс доставка в любую точку России;
- Помощь Конструкторского Отдела и консультации квалифицированных инженеров;
- Техническая поддержка проекта, помощь в подборе аналогов, поставка прототипов;
- Поставка электронных компонентов под контролем ВП;
- Система менеджмента качества сертифицирована по Международному стандарту ISO 9001;
- При необходимости вся продукция военного и аэрокосмического назначения проходит испытания и сертификацию в лаборатории (по согласованию с заказчиком);
- Поставка специализированных компонентов военного и аэрокосмического уровня качества (Xilinx, Altera, Analog Devices, Intersil, Interpoint, Microsemi, Actel, Aeroflex, Peregrine, VPT, Syfer, Eurofarad, Texas Instruments, MS Kennedy, Miteq, Cobham, E2V, MA-COM, Hittite, Mini-Circuits, General Dynamics и др.);

Компания «Океан Электроники» является официальным дистрибьютором и эксклюзивным представителем в России одного из крупнейших производителей разъемов военного и аэрокосмического назначения **«JONHON»**, а так же официальным дистрибьютором и эксклюзивным представителем в России производителя высокотехнологичных и надежных решений для передачи СВЧ сигналов **«FORSTAR»**.

AVIC JONHON

«JONHON» (основан в 1970 г.)

Разъемы специального, военного и аэрокосмического назначения:

(Применяются в военной, авиационной, аэрокосмической, морской, железнодорожной, горно- и нефтедобывающей отраслях промышленности)

«FORSTAR» (основан в 1998 г.)

ВЧ соединители, коаксиальные кабели, кабельные сборки и микроволновые компоненты:

(Применяются в телекоммуникациях гражданского и специального назначения, в средствах связи, РЛС, а так же военной, авиационной и аэрокосмической отраслях промышленности).

FORSTAR®

Телефон: 8 (812) 309-75-97 (многоканальный)
Факс: 8 (812) 320-03-32
Электронная почта: ocean@oceanchips.ru
Web: http://oceanchips.ru/
Адрес: 198099, г. Санкт-Петербург, ул. Калинина, д. 2, корп. 4, лит. А