Inductors

RF chokes, BC+ series

Series/Type: **B78108E, B78148E**

Date: July 2015

© EPCOS AG 2015. Reproduction, publication and dissemination of this publication, enclosures hereto and the information contained therein without EPCOS' prior express consent is prohibited.

EPCOS AG is a TDK Group Company.

BC chokes
Rated inductance 0.1 µH … 100 µH
Rated current 640 mA .. 7300 mA

Construction

- Ferrite drum core
- Winding: enamel copper wire
- Flame-retardant lacquer coating

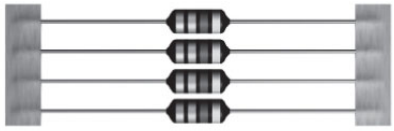

B78108E

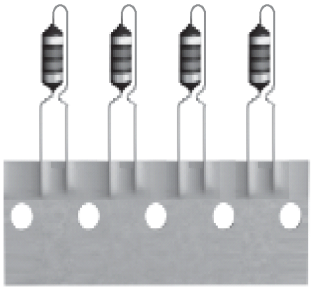

B78148E

Features

- Very high rated current
- High saturation behaviour
- High self-resonance frequency
- Suitable for wave soldering
- RoHS-compatible

Applications

- DC-DC converter
- Filtering of supply voltage & battery charger (EMI)
- RF blocking and filtering
- Decoupling and interference suppression
- For telecommunications, LED and energy-saving lamps, solar LED lamps, entertainment electronics

Terminals

- Radially bent to 5mm lead spacing (B78148E)
- Central axial leads (B78108E)
- Base material Cu
- Electroplated with nickel and pure tin

Marking

- Inductance indicated by color bands in accordance with IEC 60062

Delivery mode and packing units

- Taped, Ammo and reel packing
- Packing units:

	Ammo (pcs./pack.)	Reel (pcs./reel)
Axial	2500	5000
Radial	2500	2000

Dimensional drawings

B78108E (axial leads, taped) Dimensions in mm

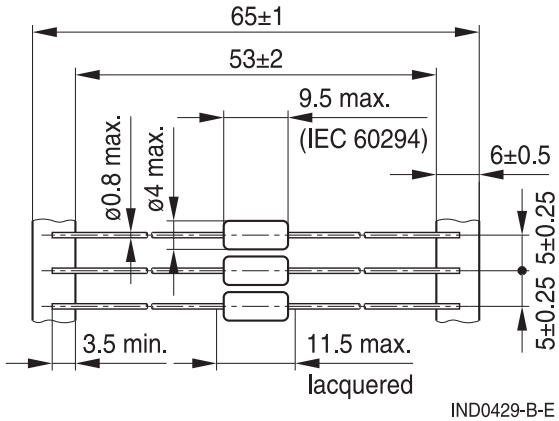

IND0429-B-E **Minimum lead spacing 12.5 mm**

B78148E (central radial leads, taped) Dimensions in mm

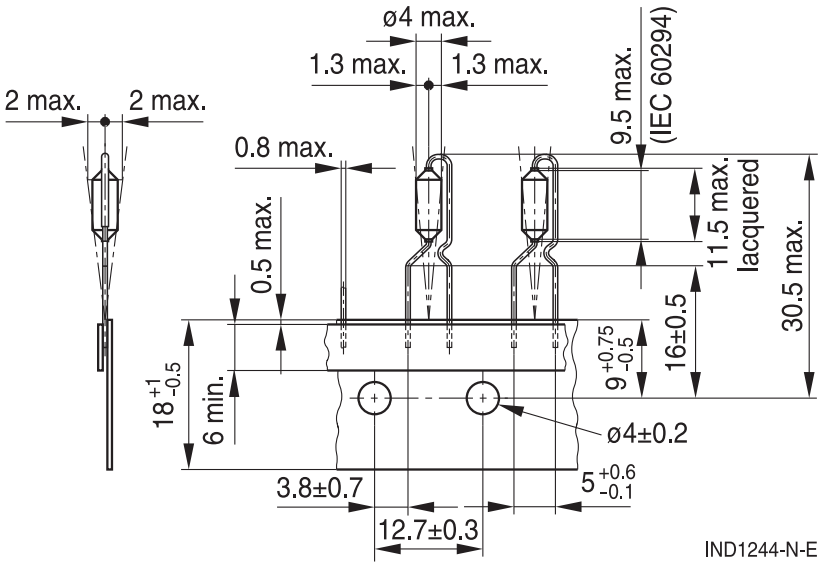

IND1244-N-E

IND0629-B

Packing Dimensions in mm

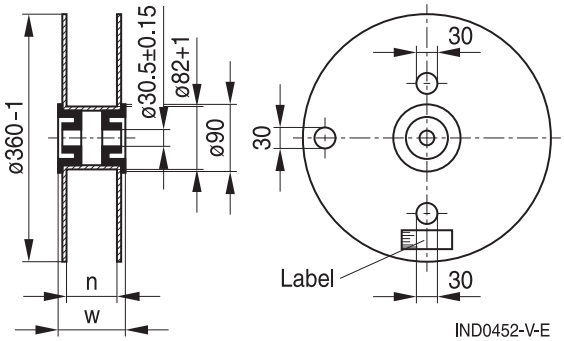

IND0452-V-E

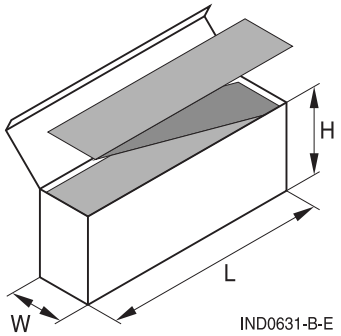

IND0631-B-E

n (mm):	axial 72 + 1, radial 42 + 1	L x W x H (max. mm):
w (mm):	axial 84 max., radial 54 max.	axial: 275 x 80 x 140, radial: 340 x 50 x 210

Technical data and measuring conditions

Rated inductance L_R	Measured with LCR meter Agilent 4284A or impedance analyzer Agilent 4294A Measuring current: 1 mA Measuring temperature: +20 ºC
Q factor Q_{min}	Measured with impedance analyzer Agilent 4294A, +20 °C
Rated temperature T_R	+40 °C
Rated current I_R	Maximum permissible DC current based on rated temperature of +40 °C and component temperature of max. +125 °C
Saturation current I_{sat}	Max. permissible DC with inductance decrease $\Delta L/L_0$ of approx. 10%, at +20 ºC (Agilent 4284A and 42841A)
DC resistance R_{max}	Measured at +20 ºC
Resonance frequency $f_{res,min}$	Measured with Agilent 4294A or 8753ES, +20 °C
Solderability (lead-free)	Sn95.5Ag3.8Cu0.7: (+245 ±5) °C, (3 ±0.3) s Wetting of soldering area: ≥ 90% (to IEC 60068-2-20, test Ta)
Resistance to soldering heat	(+260 ±5)°C, 10 s (to IEC 60068-2-20, test Tb)
Tensile strength of leads	≥ 20 N (to IEC 60068-2-21, test Ua)
Climatic category	55/125/56 (to IEC 60068-1)
Storage conditions	Mounted: –55 °C ... +125 °C Packaged: –25 °C ... +40 °C, ≤ 75% RH
Weight	Approx. 0.38 g

Mounting information:

When bending the leads, take care that the start-of-winding areas at the face ends (protected by glue and lacquer) are not subjected to any mechanical stress.

Characteristics and ordering codes

L_R µH	Tolerance	f_L MHz	Q_{min}	f_Q MHz	I_R mA	I_{sat} mA	R_{max} Ω	$f_{res, min}$ MHz	Ordering code [1] (reel packing) [2]
0.1	±20% ≙ M	1.0	50	7.96	7300	17000	0.015	700	B781*8E1101M000
0.15		1.0	50	7.96	6500	14500	0.017	650	B781*8E1151M000
0.22		1.0	55	7.96	5900	12200	0.019	610	B781*8E1221M000
0.33		1.0	60	7.96	5300	10100	0.023	480	B781*8E1331M000
0.47		1.0	60	7.96	5000	8500	0.027	400	B781*8E1471M000
0.68		1.0	60	7.96	4600	7100	0.031	360	B781*8E1681M000
1.0	±10% ≙ K	1.0	60	7.96	4150	5800	0.038	260	B781*8E1102K000
1.5		1.0	60	7.96	3800	4800	0.047	235	B781*8E1152K000
2.2		1.0	50	7.96	3400	4000	0.057	150	B781*8E1222K000
3.3		1.0	45	7.96	3050	3250	0.073	75	B781*8E1332K000
4.7		1.0	45	7.96	2750	2700	0.085	35	B781*8E1472K000
6.8		1.0	40	7.96	2450	2300	0.105	25	B781*8E1682K000
10		1.0	35	7.96	2250	2000	0.136	20	B781*8E1103K000
15		0.1	40	0.796	1600	1450	0.230	15	B781*8E1153K000
22		0.1	40	0.796	1300	1250	0.350	12	B781*8E1223K000
33	±5% ≙ J	0.1	50	0.796	1050	1000	0.550	9.0	B781*8E1333J000
47		0.1	40	0.796	950	870	0.680	8.0	B781*8E1473J000
68		0.1	45	0.796	780	720	0.900	6.5	B781*8E1683J000
100		0.1	60	0.796	640	580	1.450	6.0	B781*8E1104J000

1) Replace the * by code number “0” for axial taping or by “4” for radial taping.
2) For Ammo pack the last digit has to be a “9”. Example: B78108E1223K009

Impedance |Z| versus frequency f

measured with impedance analyzer Agilent 4294A or S-parameter network analyzer Agilent 8753ES, typical values at +20 °C

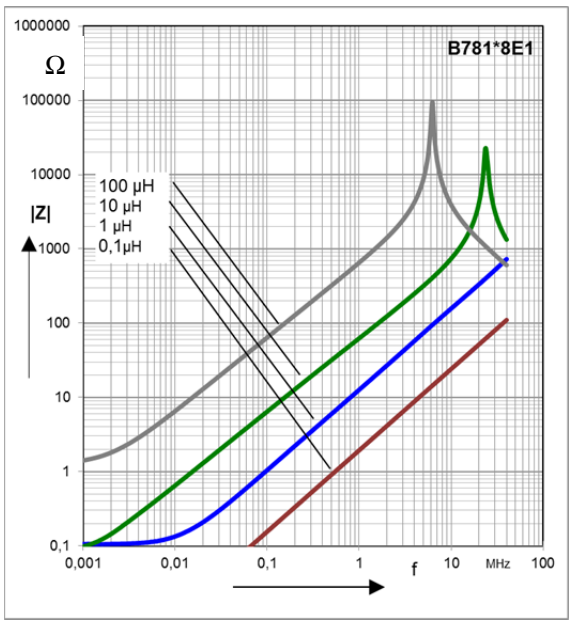

Inductance L versus DC load current I_{DC}

measured with LCR meter Agilent 4284A and 42841A , typical values at +20 °C

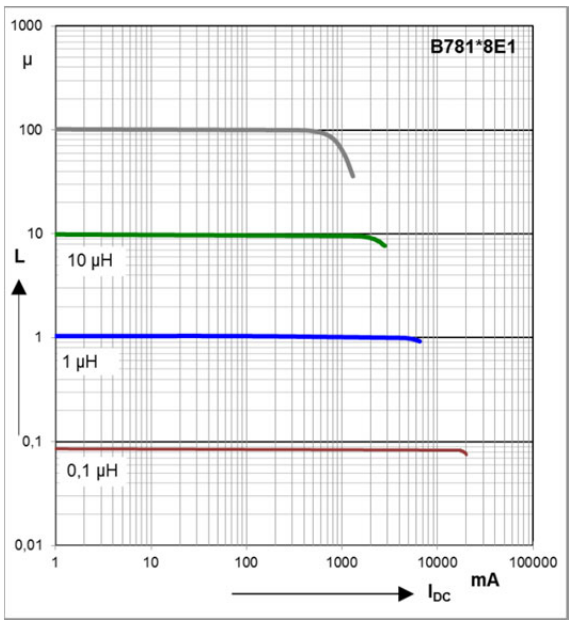

Q factor versus frequency f

measured with impedance analyzer Agilent 4294A, typical values at +20 °C

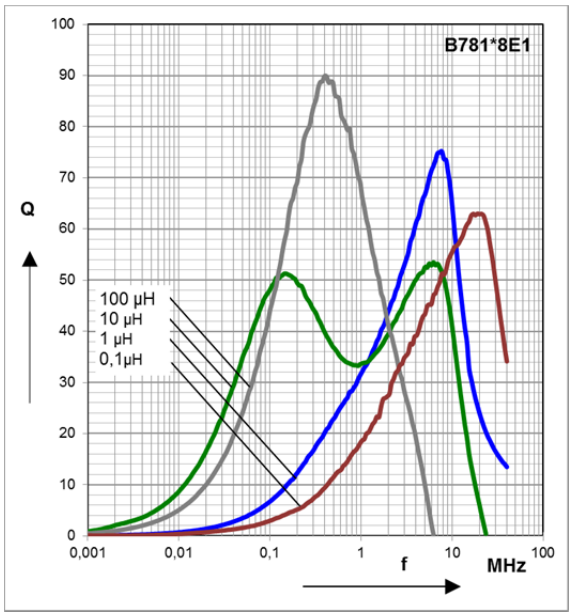

Current derating I_{OP}/I_R versus ambient temperature T_A

(rated temperature T_R = +40 °C)

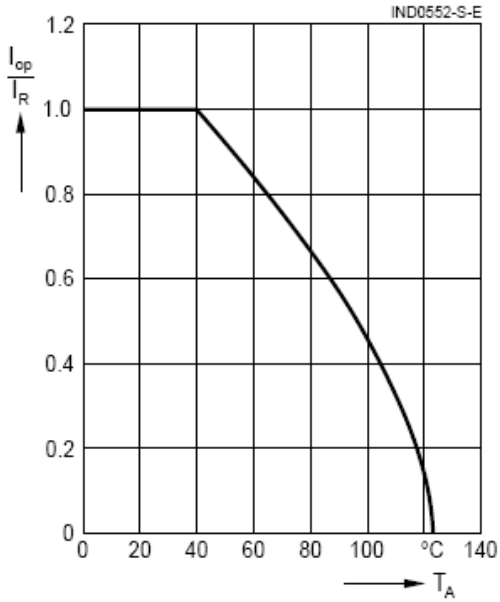

Cautions and warnings

■ Please note the recommendations in our Inductors data book (latest edition) and in the data sheets.
– Particular attention should be paid to the derating curves given there.
– The soldering conditions should also be observed. Temperatures quoted in relation to wave soldering refer to the pin, not the housing.

■ If the components are to be washed varnished it is necessary to check whether the washing varnish agent that is used has a negative effect on the wire insulation, any plastics that are used, or on glued joints. In particular, it is possible for washing varnish agent residues to have a negative effect in the long-term on wire insulation Washing processes may damage the product due to the possible static or cyclic mechanical loads (e.g. ultrasonic cleaning). They may cause cracks to develop on the product and its parts,
which might lead to reduced reliability or lifetime.

■ The following points must be observed if the components are potted in customer applications:
– Many potting materials shrink as they harden. They therefore exert a pressure on the plastic housing or core. This pressure can have a deleterious effect on electrical properties, and in extreme cases can damage the core or plastic housing mechanically.
– It is necessary to check whether the potting material used attacks or destroys the wire insulation, plastics or glue.
– The effect of the potting material can change the high-frequency behaviour of the components.

■ Ferrites are sensitive to direct impact. This can cause the core material to flake, or lead to breakage of the core.

■ Even for customer-specific products, conclusive validation of the component in the circuit can only be carried out by the customer.

Display of ordering codes for EPCOS products

The ordering code for one and the same product can be represented differently in data sheets, data books, other publications and the website of EPCOS, or in order-related documents such as shipping notes, order confirmations and product labels. **The varying represantations of the ordering codes are due to different processes employed and do not affect the specifications of the respective products.** Detailed information can be found on the Internet under www.epcos.com/orderingcodes.

Important notes

The following applies to all products named in this publication:

1. Some parts of this publication contain **statements about the suitability of our products for certain areas of application**. These statements are based on our knowledge of typical requirements that are often placed on our products in the areas of application concerned. We nevertheless expressly point out **that such statements cannot be regarded as binding statements about the suitability of our products for a particular customer application.** As a rule we are either unfamiliar with individual customer applications or less familiar with them than the customers themselves. For these reasons, it is always ultimately incumbent on the customer to check and decide whether a product with the properties described in the product specification is suitable for use in a particular customer application.
2. We also point out that **in individual cases, a malfunction of electronic components or failure before the end of their usual service life cannot be completely ruled out in the current state of the art, even if they are operated as specified.** In customer applications requiring a very high level of operational safety and especially in customer applications in which the malfunction or failure of an electronic component could endanger human life or health (e.g. in accident prevention or life-saving systems), it must therefore be ensured by means of suitable design of the customer application or other action taken by the customer (e.g. installation of protective circuitry or redundancy) that no injury or damage is sustained by third parties in the event of malfunction or failure of an electronic component.
3. **The warnings, cautions and product-specific notes must be observed.**
4. In order to satisfy certain technical requirements, **some of the products described in this publication may contain substances subject to restrictions in certain jurisdictions (e.g. because they are classed as hazardous)**. Useful information on this will be found in our Material Data Sheets on the Internet (www.tdk-electronics.tdk.com/material). Should you have any more detailed questions, please contact our sales offices.
5. We constantly strive to improve our products. Consequently, **the products described in this publication may change from time to time**. The same is true of the corresponding product specifications. Please check therefore to what extent product descriptions and specifications contained in this publication are still applicable before or when you place an order.

   We also **reserve the right to discontinue production and delivery of products**. Consequently, we cannot guarantee that all products named in this publication will always be available. The aforementioned does not apply in the case of individual agreements deviating from the foregoing for customer-specific products.
6. Unless otherwise agreed in individual contracts, **all orders are subject to our General Terms and Conditions of Supply.**
7. **Our manufacturing sites serving the automotive business apply the IATF 16949 standard.** The IATF certifications confirm our compliance with requirements regarding the quality management system in the automotive industry. Referring to customer requirements and customer specific requirements ("CSR") TDK always has and will continue to have the policy of respecting individual agreements. Even if IATF 16949 may appear to support the acceptance of unilateral requirements, we hereby like to emphasize that **only requirements mutually agreed upon can and will be implemented in our Quality Management System.** For clarification purposes we like to point out that obligations from IATF 16949 shall only become legally binding if individually agreed upon.
8. The trade names EPCOS, CeraCharge, CeraDiode, CeraLink, CeraPad, CeraPlas, CSMP, CTVS, DeltaCap, DigiSiMic, ExoCore, FilterCap, FormFit, LeaXield, MiniBlue, MiniCell, MKD, MKK, MotorCap, PCC, PhaseCap, PhaseCube, PhaseMod, PhiCap, PowerHap, PQSine, PQvar, SIFERRIT, SIFI, SIKOREL, SilverCap, SIMDAD, SiMic, SIMID, SineFormer, SIOV, ThermoFuse, WindCap are **trademarks registered or pending** in Europe and in other countries. Further information will be found on the Internet at www.tdk-electronics.tdk.com/trademarks.

Release 2018-10

Mouser Electronics

Authorized Distributor

Click to View Pricing, Inventory, Delivery & Lifecycle Information:

EPCOS / TDK:

B78108E1153K000 B78148E1101M000 B78148E1151M000 B78148E1682K000 B78108E1221M000 B78148E1472K000 B78108E1682K009 B78148E1101M009 B78148E1222K009 B78148E1333J009 B78108E1472K009 B78108E1331M009 B78108E1153K009 B78148E1104J000 B78148E1332K009 B78108E1102K000 B78148E1471M000 B78108E1471M009 B78108E1102K009 B78148E1223K009 B78108E1683J000 B78148E1153K000 B78148E1221M000 B78108E1151M000 B78108E1103K000 B78148E1332K000 B78108E1222K000 B78148E1331M000 B78148E1473J000 B78108E1331M000 B78108E1221M009 B78148E1681M000 B78148E1473J009 B78108E1222K009 B78108E1683J009 B78108E1152K009 B78148E1682K009 B78108E1681M000 B78108E1152K000 B78148E1152K000 B78148E1103K000 B78108E1101M009 B78108E1223K009 B78108E1682K000 B78148E1223K000 B78108E1332K009 B78108E1472K000 B78148E1102K009 B78108E1333J009 B78148E1104J009 B78108E1101M000 B78108E1104J000 B78148E1331M009 B78108E1104J009 B78108E1473J009 B78148E1221M009 B78148E1153K009 B78148E1683J009 B78148E1472K009 B78148E1471M009 B78108E1332K000 B78148E1102K000 B78108E1103K009 B78148E1151M009 B78108E1223K000 B78148E1333J000 B78148E1683J000 B78108E1151M009 B78108E1471M000 B78108E1473J000 B78108E1681M009 B78108E1333J000 B78148E1222K000 B78148E1681M009 B78148E1152K009 B78148E1103K009

OCEAN CHIPS
Океан Электроники
Поставка электронных компонентов

Компания «Океан Электроники» предлагает заключение долгосрочных отношений при поставках импортных электронных компонентов на взаимовыгодных условиях!

Наши преимущества:

- Поставка оригинальных импортных электронных компонентов напрямую с производств Америки, Европы и Азии, а так же с крупнейших складов мира;
- Широкая линейка поставок активных и пассивных импортных электронных компонентов (более 30 млн. наименований);
- Поставка сложных, дефицитных, либо снятых с производства позиций;
- Оперативные сроки поставки под заказ (от 5 рабочих дней);
- Экспресс доставка в любую точку России;
- Помощь Конструкторского Отдела и консультации квалифицированных инженеров;
- Техническая поддержка проекта, помощь в подборе аналогов, поставка прототипов;
- Поставка электронных компонентов под контролем ВП;
- Система менеджмента качества сертифицирована по Международному стандарту ISO 9001;
- При необходимости вся продукция военного и аэрокосмического назначения проходит испытания и сертификацию в лаборатории (по согласованию с заказчиком);
- Поставка специализированных компонентов военного и аэрокосмического уровня качества (Xilinx, Altera, Analog Devices, Intersil, Interpoint, Microsemi, Actel, Aeroflex, Peregrine, VPT, Syfer, Eurofarad, Texas Instruments, MS Kennedy, Miteq, Cobham, E2V, MA-COM, Hittite, Mini-Circuits, General Dynamics и др.);

Компания «Океан Электроники» является официальным дистрибьютором и эксклюзивным представителем в России одного из крупнейших производителей разъемов военного и аэрокосмического назначения **«JONHON»**, а так же официальным дистрибьютором и эксклюзивным представителем в России производителя высокотехнологичных и надежных решений для передачи СВЧ сигналов **«FORSTAR»**.

AVIC JONHON

«JONHON» (основан в 1970 г.)

Разъемы специального, военного и аэрокосмического назначения:

(Применяются в военной, авиационной, аэрокосмической, морской, железнодорожной, горно- и нефтедобывающей отраслях промышленности)

«FORSTAR» (основан в 1998 г.)

ВЧ соединители, коаксиальные кабели, кабельные сборки и микроволновые компоненты:

(Применяются в телекоммуникациях гражданского и специального назначения, в средствах связи, РЛС, а так же военной, авиационной и аэрокосмической отраслях промышленности).

FORSTAR®

Телефон: 8 (812) 309-75-97 (многоканальный)
Факс: 8 (812) 320-03-32
Электронная почта: ocean@oceanchips.ru
Web: http://oceanchips.ru/
Адрес: 198099, г. Санкт-Петербург, ул. Калинина, д. 2, корп. 4, лит. А