HIGH SPEED 16K x 8 CMOS PROM/RPROM

KEY FEATURES

- **Very Fast Access Time**
  — 35 ns
- **Low Power Consumption**
- **Fast Programming**
- **Pin Compatible with Am27S51 and N82HS1281**
- **Immune to Latch-Up**
  — Up to 200 mA
- **ESD Protection Exceeds 2000 V**

GENERAL DESCRIPTION

The WS57C51C is a High Performance 128K UV Erasable Electrically Re-Programmable Read Only Memory (RPROM). It is manufactured in an advanced CMOS technology which enables it to operate at Bipolar PROM speeds while consuming only 25% of the power required by its Bipolar counterparts.

A further advantage of the WS57C51C over Bipolar PROM devices is the fact that it utilizes a proven EPROM technology. This enables the entire memory array to be tested for switching characteristics and functionality after assembly. Unlike devices which cannot be erased, every WS5751C in a windowed package is 100% tested with worst case test patterns both before and after assembly.

The WS57C51C provides a low power alternative to those designs which are committed to a Bipolar PROM footprint. It is a direct drop-in replacement for a Bipolar PROM of the same architecture (16K x 8). No software, hardware or layout changes need be performed.

BLOCK DIAGRAM

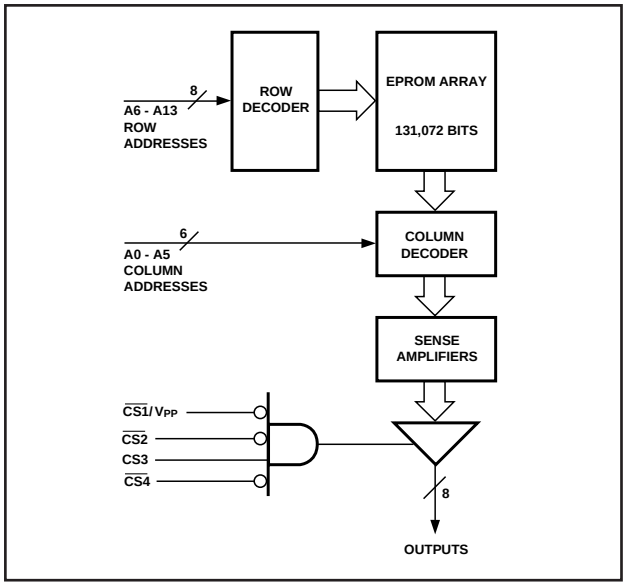

PIN CONFIGURATION

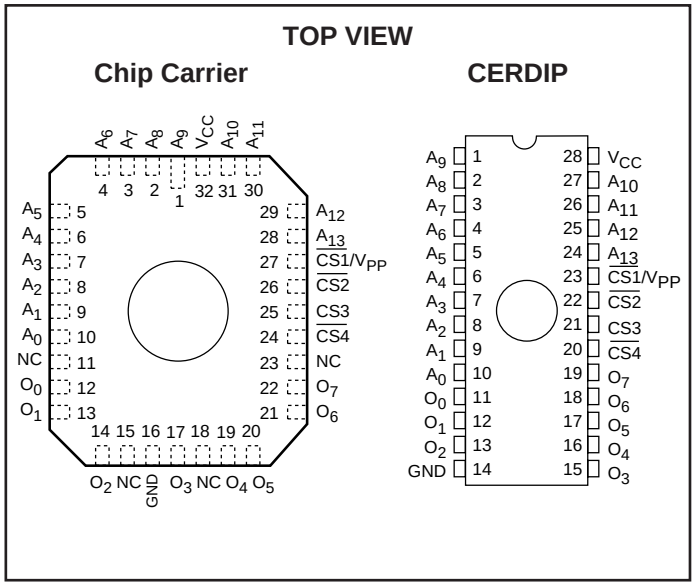

PRODUCT SELECTION GUIDE

PARAMETER	57C51C-35	57C51C-45	57C51C-55	57C51C-70
Address Access Time (Max)	35 ns	45 ns	55 ns	70 ns
CS to Output Valid Time (Max)	20 ns	20 ns	25 ns	30 ns

ABSOLUTE MAXIMUM RATINGS*

Storage Temperature.....–65° to + 150°C

Voltage on any Pin with
Respect to Ground .....–0.6V to +7V

V_{PP} with Respect to Ground.....–0.6V to + 14V

ESD Protection.....>2000V

***NOTICE:**
Stresses above those listed under "Absolute Maximum Ratings" may cause permanent damage to the device. This is a stress rating only and functional operation of the device at these or any other conditions above those indicated in the operational sections of this specification is not implied. Exposure to absolute maximum rating conditions for extended periods of time may affect device reliability.

MODE SELECTION

PINS / MODE	$\overline{CS1}$/ V_{PP}	$\overline{CS2}$	CS3	$\overline{CS4}$	V_{CC}	OUTPUTS
Read	V_{IL}	V_{IL}	V_{IH}	V_{IL}	V_{CC}	D_{OUT}
Output Disable	V_{IH}	X	X	X	V_{CC}	High Z
Output Disable	X	V_{IH}	X	X	V_{CC}	High Z
Output Disable	X	X	V_{IL}	X	V_{CC}	High Z
Output Disable	X	X	X	V_{IH}	V_{CC}	High Z
Program	V_{PP}	V_{IH}	X	X	V_{CC}	D_{IN}
Program Verify	V_{IL}	V_{IL}	V_{IH}	V_{IL}	V_{CC}	D_{OUT}

OPERATING RANGE

RANGE	TEMPERATURE	V_{CC}
Commercial	0°C to +70°C	+5V ± 10%
Industrial	–40°C to +85°C	+5V ± 10%
Military	–55°C to +125°C	+5V ± 10%

DC READ CHARACTERISTICS Over Operating Range. (See Above)

SYMBOL	PARAMETER	TEST CONDITIONS		MIN	MAX	UNITS
V_{IL}	Input Low Voltage	(Note 3)		–0.1	0.8	V
V_{IH}	Input High Voltage	(Note 3)		2.0	V_{CC} + 0.3	V
V_{OL}	Output Low Voltage	I_{OL} = 16 mA			0.4	V
V_{OH}	Output High Voltage	I_{OH} = –4 mA		2.4		V
I_{CC1}	V_{CC} Active Current (CMOS)	V_{CC} = 5.5 V, f = 0 MHz (Note 1), Output Not Loaded Add 4 mA/MHz for AC Operation	Comm'l		30	mA
			Industrial		35	mA
			Military		35	mA
I_{CC2}	V_{CC} Active Current (TTL)	V_{CC} = 5.5 V, f = 0 MHz (Note 2), Output Not Loaded Add 4 mA/MHz for AC Operation	Comm'l		50	mA
			Industrial		60	mA
			Military		60	mA
I_{LI}	Input Leakage Current	V_{IN} = 5.5V or Gnd		–10	10	µA
I_{LO}	Output Leakage Current	V_{OUT} = 5.5 V or Gnd		–10	10	µA

NOTES:
1. CMOS inputs: GND ± 0.3V or V_{CC} ± 0.3V.
2. TTL inputs: $V_{IL} \leq 0.8V$, $V_{IH} \geq 2.0V$.
3. These are absolute voltages with respect to device ground pin and include all overshoots due to system and/or tester noise. Do not attempt to test these values without suitable equipment.

AC READ CHARACTERISTICS Over Operating Range. (See Above)

PARAMETER	SYMBOL	57C51C-35		57C51C-45		57C51C-55		57C51C-70		UNITS
		MIN	MAX	MIN	MAX	MIN	MAX	MIN	MAX	
Address to Output Delay	t_{ACC}		35		45		55		70	ns
$\overline{CS}$ to Output Delay	t_{CS}		20		20		25		30	
Output Disable to Output Float*	t_{DF}		20		20		25		25	
Address to Output Hold	t_{OH}	0		0		0		0		

*Sampled, Not 100% Tested.

AC READ TIMING DIAGRAM

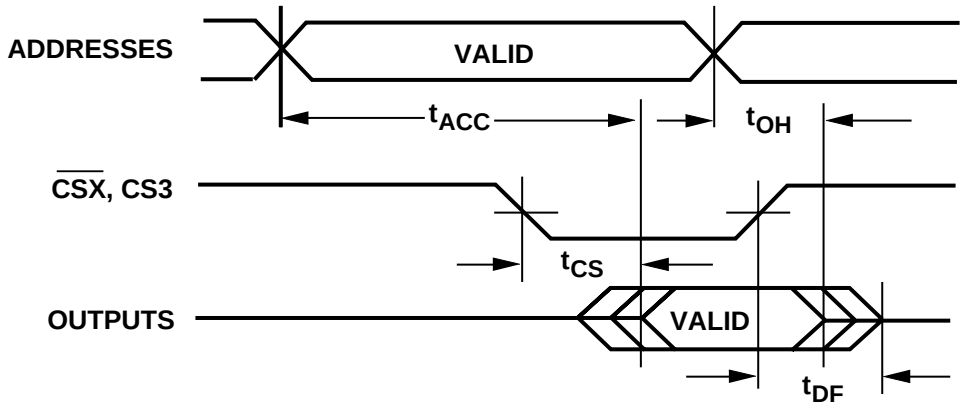

CAPACITANCE[4] T_A = 25°C, f = 1 MHz

SYMBOL	PARAMETER	CONDITIONS	TYP[5]	MAX	UNITS
C_{IN}	Input Capacitance	V_{IN} = 0V	4	6	pF
C_{OUT}	Output Capacitance	V_{OUT} = 0V	8	12	pF
C_{VPP}	V_{PP} Capacitance	V_{PP} = 0 V	18	25	pF

NOTES: 4. This parameter is only sampled and is not 100% tested.
5.Typical values are for T_A = 25°C and nominal supply voltages.

TEST LOAD (High Impedance Test Systems)

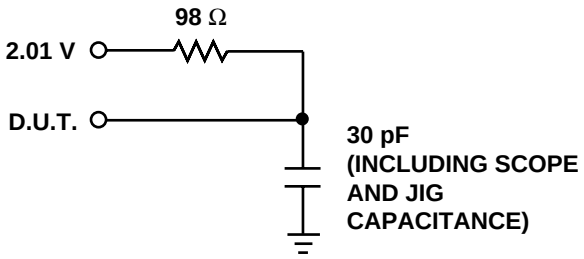

A.C. TESTING INPUT/OUTPUT WAVEFORM

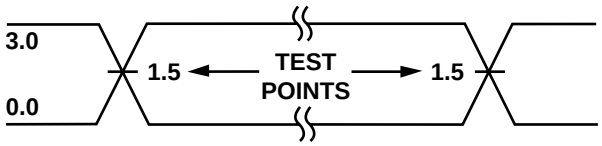

A.C. testing inputs are driven at 3.0 V for a logic "1" and 0.0 V for a logic "0." Timing measurements are made at 1.5 V for input and output transitions in both directions.

NOTE: 6. Provide adequate decoupling capacitance as close as possible to this device to achieve the published A.C. and D.C. parameters. A 0.1 microfarad capacitor in parallel with a 0.01 microfarad capacitor connected between V_{CC} and ground is recommended. Inadequate decoupling may result in access time degradation or other transient performance failures.

NORMALIZED SUPPLY CURRENT vs. SUPPLY VOLTAGE

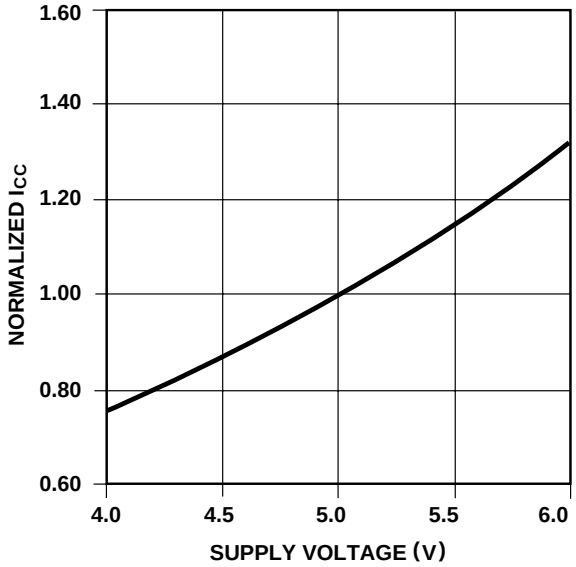

TYPICAL ACCESS TIME CHANGE vs. OUTPUT LOADING

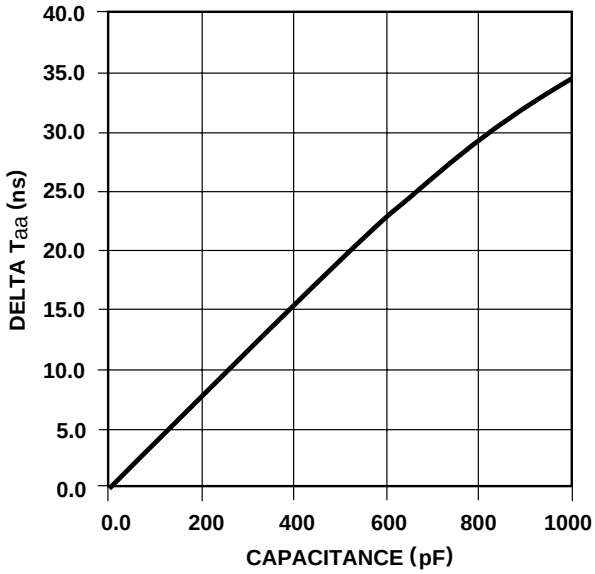

NORMALIZED T_{aa} vs. AMBIENT TEMPERATURE

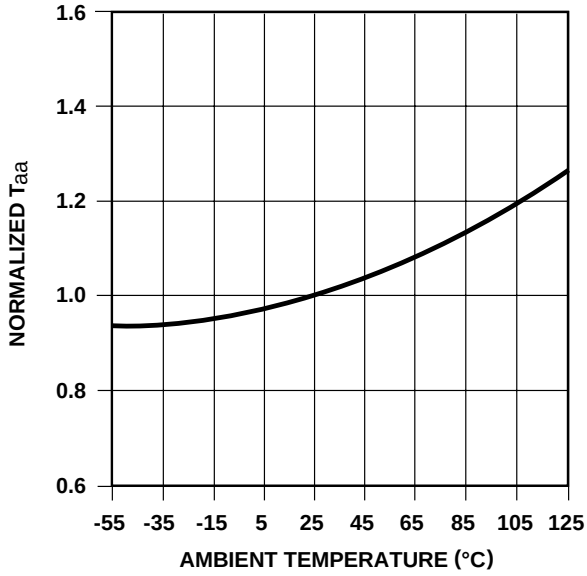

NORMALIZED SUPPLY CURRENT vs. AMBIENT TEMPERATURE

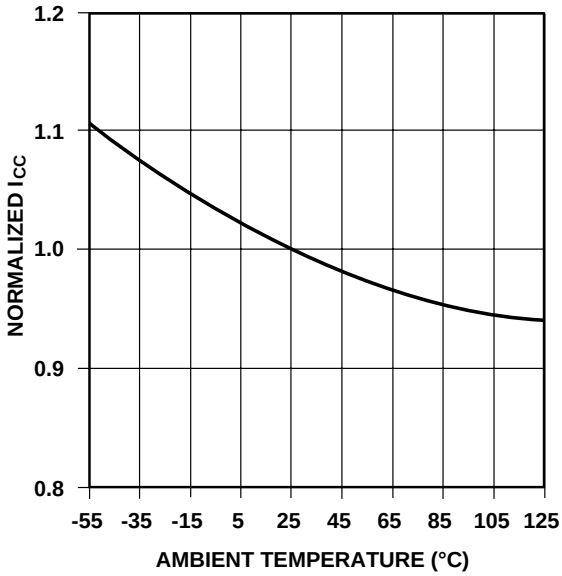

PROGRAMMING INFORMATION

DC CHARACTERISTICS (T_A = 25 ± 5°C, V_{CC} = 6.25 V ± 0.25 V, V_{PP} = 12.75 ± 0.25 V)

SYMBOLS	PARAMETER	MIN	MAX	UNITS
I_{LI}	Input Leakage Current (V_{IN} = V_{CC} or Gnd)	–10	10	µA
I_{PP}	V_{PP} Supply Current During Programming Pulse		60	mA
I_{CC}	V_{CC} Supply Current		25	mA
V_{OL}	Output Low Voltage During Verify (I_{OL} = 16 mA)		0.45	V
V_{OH}	Output High Voltage During Verify (I_{OH} = –4 mA)	2.4		V

NOTE: 7. V_{PP} must not be greater than 13 volts including overshoot.

AC CHARACTERISTICS (T_A = 25 ± 5°C, V_{CC} = 6.25 V ± 0.25 V, V_{PP} = 12.75 ± 0.25 V)

SYMBOLS	PARAMETER	MIN	TYP	MAX	UNITS
t_{AS}	Address Setup Time	2			µs
t_{DF}	Chip Disable Setup Time			30	ns
t_{DS}	Data Setup Time	2			µs
t_{PW}	Program Pulse Width	100		200	µs
t_{DH}	Data Hold Time	2			µs
t_{CS}	Chip Select Delay			30	ns
t_{RF}	V_{PP} Rise and Fall Time	1			µs

PROGRAMMING WAVEFORM

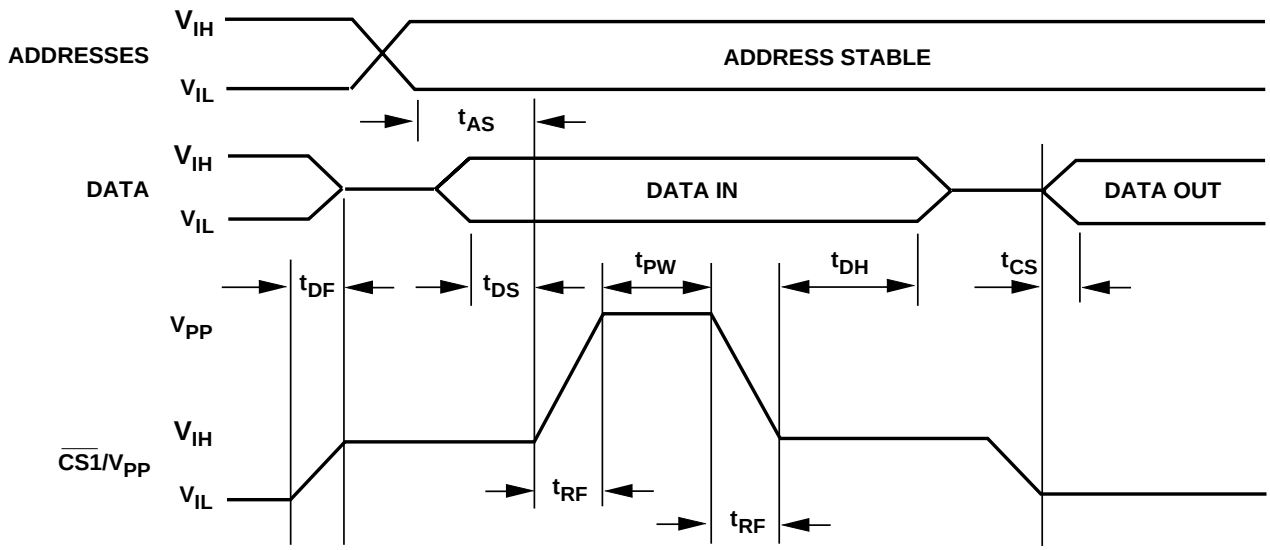

ORDERING INFORMATION

PART NUMBER	SPEED (ns)	PACKAGE TYPE	PACKAGE DRAWING	OPERATING TEMPERATURE RANGE	WSI MANUFACTURING PROCEDURE
WS57C51C-35D	35	28 Pin CERDIP, 0.6"	D2	Comm'l	Standard
WS57C51C-35T	35	28 Pin CERDIP, 0.3"	T2	Comm'l	Standard
WS57C51C-35TI	35	28 Pin CERDIP, 0.3"	T2	Industrial	Standard
WS57C51C-45CMB	45	32 Pad CLLCC	C2	Military	MIL-STD-883C
WS57C51C-45D	45	28 Pin CERDIP, 0.6"	D2	Comm'l	Standard
WS57C51C-45DMB	45	28 Pin CERDIP, 0.6"	D2	Military	MIL-STD-883C
WS57C51C-45J	45	32 Pin PLDCC	J4	Comm'l	Standard
WS57C51C-45JI	45	32 Pin PLDCC	J4	Industrial	Standard
WS57C51C-45L	45	32 Pin CLDCC	L3	Comm'l	Standard
WS57C51C-45T	45	28 Pin CERDIP, 0.3"	T2	Comm'l	Standard
WS57C51C-45TI	45	28 Pin CERDIP, 0.3"	T2	Industrial	Standard
WS57C51C-45TMB	45	28 Pin CERDIP, 0.3"	T2	Military	MIL-STD-883C
WS57C51C-55CMB	55	32 Pad CLLCC	C2	Military	MIL-STD-883C
WS57C51C-55D	55	28 Pin CERDIP, 0.6"	D2	Comm'l	Standard
WS57C51C-55DMB	55	28 Pin CERDIP, 0.6"	D2	Military	MIL-STD-883C
WS57C51C-55J	55	32 Pin PLDCC	J4	Comm'l	Standard
WS57C51C-55JI	55	32 Pin PLDCC	J4	Industrial	Standard
WS57C51C-55L	55	32 Pin CLDCC	L3	Comm'l	Standard
WS57C51C-55T	55	28 Pin CERDIP, 0.3"	T2	Comm'l	Standard
WS57C51C-55TI	55	28 Pin CERDIP, 0.3"	T2	Industrial	Standard
WS57C51C-55TMB	55	28 Pin CERDIP, 0.3"	T2	Military	MIL-STD-883C
WS57C51C-70D	70	28 Pin CERDIP, 0.6"	D2	Comm'l	Standard
WS57C51C-70T	70	28 Pin CERDIP, 0.3"	T2	Comm'l	Standard

NOTES: 8. The actual part marking will not include the initials "WS."

PROGRAMMING/ALGORITHMS/ERASURE/PROGRAMMERS

REFER TO PAGE 5-1

The WS57C51C is programmed using Algorithm D shown on page 5-9.

OCEAN CHIPS
Океан Электроники
Поставка электронных компонентов

Компания «Океан Электроники» предлагает заключение долгосрочных отношений при поставках импортных электронных компонентов на взаимовыгодных условиях!

Наши преимущества:

- Поставка оригинальных импортных электронных компонентов напрямую с производств Америки, Европы и Азии, а так же с крупнейших складов мира;
- Широкая линейка поставок активных и пассивных импортных электронных компонентов (более 30 млн. наименований);
- Поставка сложных, дефицитных, либо снятых с производства позиций;
- Оперативные сроки поставки под заказ (от 5 рабочих дней);
- Экспресс доставка в любую точку России;
- Помощь Конструкторского Отдела и консультации квалифицированных инженеров;
- Техническая поддержка проекта, помощь в подборе аналогов, поставка прототипов;
- Поставка электронных компонентов под контролем ВП;
- Система менеджмента качества сертифицирована по Международному стандарту ISO 9001;
- При необходимости вся продукция военного и аэрокосмического назначения проходит испытания и сертификацию в лаборатории (по согласованию с заказчиком);
- Поставка специализированных компонентов военного и аэрокосмического уровня качества (Xilinx, Altera, Analog Devices, Intersil, Interpoint, Microsemi, Actel, Aeroflex, Peregrine, VPT, Syfer, Eurofarad, Texas Instruments, MS Kennedy, Miteq, Cobham, E2V, MA-COM, Hittite, Mini-Circuits, General Dynamics и др.);

Компания «Океан Электроники» является официальным дистрибьютором и эксклюзивным представителем в России одного из крупнейших производителей разъемов военного и аэрокосмического назначения **«JONHON»**, а так же официальным дистрибьютором и эксклюзивным представителем в России производителя высокотехнологичных и надежных решений для передачи СВЧ сигналов **«FORSTAR»**.

AVIC JONHON

«JONHON» (основан в 1970 г.)

Разъемы специального, военного и аэрокосмического назначения:

(Применяются в военной, авиационной, аэрокосмической, морской, железнодорожной, горно- и нефтедобывающей отраслях промышленности)

«FORSTAR» (основан в 1998 г.)

ВЧ соединители, коаксиальные кабели, кабельные сборки и микроволновые компоненты:

(Применяются в телекоммуникациях гражданского и специального назначения, в средствах связи, РЛС, а так же военной, авиационной и аэрокосмической отраслях промышленности).

FORSTAR®

Телефон: 8 (812) 309-75-97 (многоканальный)
Факс: 8 (812) 320-03-32
Электронная почта: ocean@oceanchips.ru
Web: http://oceanchips.ru/
Адрес: 198099, г. Санкт-Петербург, ул. Калинина, д. 2, корп. 4, лит. А