Description

The CPS-1432 (80HCPS1432) is a *RapidIO Specification (Rev. 2.1)* compliant Central Packet Switch whose functionality is central to routing packets for distribution among DSPs, processors, FPGAs, other switches, or any other RapidIO-based devices. It can also be used in RapidIO backplane switching. The CPS-1432 supports Serial RapidIO (S-RIO) packet switching (unicast, multicast, and an optional broadcast) from any of its 14input ports to any of its 14 output ports.

Block Diagram

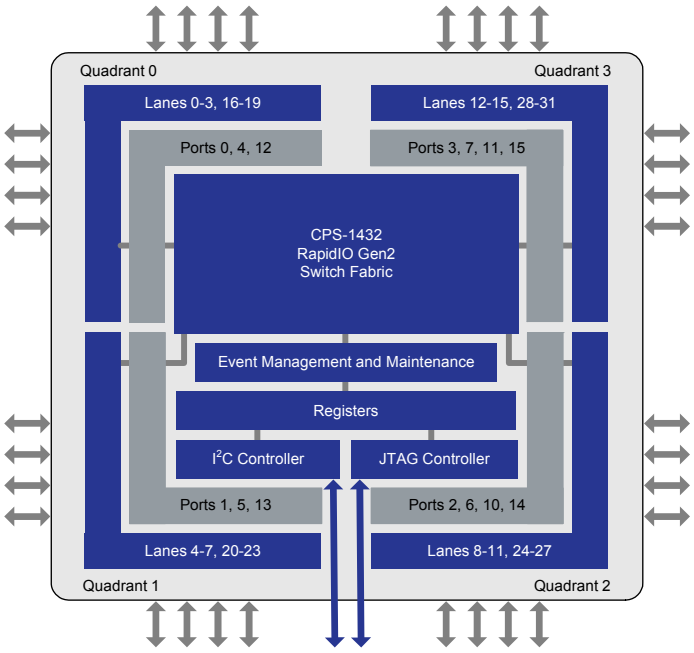

Typical Applications

- High-performance computing
- Wireless
- Defense and aerospace
- Video and imaging

Features

- RapidIO ports
  - 32 bidirectional S-RIO lanes
  - Port widths of 1x, 2x, and 4x allow up to 20 Gbps per port
  - Port speeds selectable: 6.25, 5, 3.125, 2.5, or 1.25 Gbaud
  - Support Level I defined short or long haul reach, and Level II defined short-, medium-, or long-run reach for each PHY speed
  - Error Management Extensions support
  - Software-assisted error recovery, supporting hot swap
- I^2C Interfaces
  - Provides I^2C port for maintenance and error reporting
  - Master or Slave operation
  - Master allows power-on configuration from external ROM
  - Master mode configuration with external image compressing and checksum
- Switch
  - 160 Gbps peak throughput
  - Non-blocking data flow architecture
  - Configurable for Cut-Through or Store-and-Forward data flow
  - Very low latency for all packet lengths and load conditions
  - Internal queuing buffer and retransmit buffer
  - Standard transmitter- or receiver-controlled flow control
  - Global routing or Local Port routing capability
  - Supports up to 40 simultaneous multicast masks, with broadcast
  - Performance monitoring counters for performance and diagnostics analysis. Per input port and output port counters
- SerDes
  - Transmitter pre-emphasis and drive strength + receiver equalization provides best possible signal integrity
  - Embedded PRBS generation and detection with programmable polynomials support Bit Error Rate testing
- Additional Information
  - Packet Trace/Mirror. Each input port can copy all incoming packets matching user-defined criteria to a “trace” output port.
  - Packet Filter. Each input port can filter (drop) all incoming packets matching user-defined criteria.
  - Device configurable through any of S-RIO ports, I^2C, or JTAG
  - Full JTAG Boundary Scan Support (IEEE1149.1 and 1149.6)
  - Lidless 784-FCBGA Package: 25 X 25 mm,1.0 mm ball pitch

©2017 Integrated Device Technology, Inc.

Table of Contents

1. About This Document 4
   - Introduction 4
   - Additional Resources 4
   - Document Conventions and Definitions 4
   - Revision History 4
2. Device Description 6
   - Specification Compliancy 7
3. Functional Overview 7
4. Interface Overview 8
   - S-RIO Ports 8
   - I2C Bus 8
   - JTAG TAP Port 8
   - Interrupt (IRQ_N) 8
   - Reset (RST_N) 8
   - Clock (REF_CLK_P/N) 8
   - Rext (REXT_N/P) 9
   - Speed Select (SPD[2:0]) 9
   - Quadrant Config (QCFG[7:0]) 9
   - Frequency Select (FSEL[1:0]) 9
   - Multicast (MCAST) 9
5. Configuration Pins 10
   - Speed Select Pins SPD[2:0] 10
   - Quadrant Configuration Pins QCFG[7:0] 10
6. Absolute Maximum Ratings 13
7. Recommended Operating Conditions 14
8. AC Test Conditions 15
9. Power Consumption 17
10. I^2C Bus 18
    - I^2C Master Mode and Slave Mode 18
    - I^2C Device Address 18
    - Signaling 19
    - Read/Write Figures 20
    - I^2C DC Electrical Specifications 22
    - I^2C AC Electrical Specifications 23
    - I^2C Timing Waveforms 24
11. Interrupt (IRQ_N) Electrical Specifications 25
12. Configuration (Static) Pin Specification 26
13. S-RIO Ports 27
    - Overview 27
    - Definition of Amplitude and Swing 28
    - 1.25, 2.5, and 3.125 Gbaud LP-Serial Links 29
    - Level I Electrical Specification 29
    - 5 and 6.25 Gbaud LP-Serial Links 36
    - Level II Electrical Specifications 36

14. Reference Clock 46
Reference Clock Electrical Specifications 46
15. Reset (RST_N) Specification 48
16. JTAG Interface 49
Description 49
IEEE 1149.1 (JTAG) and IEEE 1149.6 (AC Extest) Compliance 49
System Logic TAP Controller Overview 49
Signal Definitions 50
Test Data Register (DR) 51
Boundary Scan Registers 51
Instruction Register (IR) 54
EXTEST 55
Configuration Register Access (Revision A/B) 57
Configuration Register Access (Revision C) 59
JTAG DC Electrical Specifications 62
JTAG AC Electrical Specifications 63
JTAG Timing Waveforms 64
17. Pinout and Pin Listing 65
Pinout — Top View 65
Pin Listing 66
18. Package Specifications 73
Package Physical Specifications 73
Package Outline Drawings 73
Thermal Characteristics 76
19. Ordering Information 78

1. About This Document

Introduction

The *CPS-1432 Datasheet* provides hardware information about the CPS-1432, such as electrical and packaging characteristics. It is intended for hardware engineers who are designing system interconnect applications with the device.

Additional Resources

The *CPS-1432 User Manual* describes the functionality and configuration capabilities of the device. In addition, there are many other resources available that support the CPS-1432. For more information, please contact IDT for support.

Document Conventions and Definitions

This document uses the following conventions and definitions:

- To indicate signal states:
  - Differential signals use the suffix "_P" to indicate the positive half of a differential pair.
  - Differential signals use the suffix "_N" to indicate the negative half of a differential pair.
  - Non-differential signals use the suffix "_N" to indicate an active-low state.
- To define buses, the most significant bit (MSB) is on the left and least significant bit (LSB) is on the right. No leading zeros are included.
- To represent numerical values, either decimal, binary, or hexadecimal formats are used. The binary format is as follows: 0bDDD, where "D" represents either 0 or 1; the hexadecimal format is as follows: 0xDD, where "D" represents the hexadecimal digit(s); otherwise, it is decimal.
- Unless otherwise denoted, a byte refers to an 8-bit quantity; a word refers to a 32-bit quantity, and a double word refers to an 8-byte (64-bit) quantity. This is in accordance with RapidIO convention.
- A bit is set when its value is 0b1. A bit is cleared when its value is 0b0.
- A read-only register, bit, or field is one that can be read but not modified.

This symbol indicates important configuration information or suggestions.

This symbol indicates procedures or operating levels that may result in misuse or damage to the device.

Revision History

June 26, 2017

- Updated the Package Outline Drawings; no technical changes
- Updated the Ordering Information

April 4, 2016

- Added an R_X2 symbol to Table 20
- Updated Heat Sink Requirement and Analysis
- Added HMG and HMH part numbers to Ordering Information

June 12, 2013

- Updated the note associated with VDD3A (pin Y20)

June 8, 2012

- Changed the maximum 3.3V supply requirement to 3.47V in Table 6 and note 2 below the table
- Added two cautionary notes about lane reordering to Pin Listing

April 2, 2012

- Added JTAG configuration register access information for Revision C in Configuration Register Access (Revision C)
- Updated the JTAG version number for Revision C

December 9, 2011

- Loosened the Clock Input signal rise/fall minimum time specification
- Added an additional note to the power sequencing requirements

2. Device Description

The CPS-1432 is a S-RIO-compliant performance-optimized switch. This device is ideally suited for intensive processing applications which require a multiplicity of DSPs, CPUs, and / or FPGAs working together in a cluster. Its very low latency, reliable packet-transfer, and high throughput make it ideal in embedded applications including communications, imaging, or industrial controls. A switched S-RIO architecture allows a flat topology with true peer-to-peer communications. It supports four standard RapidIO levels of priority, and can unicast, multicast, or broadcast packets to destination ports. With link rates to 6.25 Gbaud and transmitter pre-emphasis and receiver equalization, the device can provide up to 20 Gbps per port across 100 cm (40 inches) of FR4 with 2 connectors. This makes the device ideally suited for communicating across backplanes or cables.

The CPS-1432 receives packets from up to 14 ports. The CPS-1432 offers full support for switching as well as enhanced functions:

1. Switching — All packets are switched in accordance with the *RapidIO Specification (Rev. 2.1)*, with packet destination IDs (destID) determining how the packet is routed.

   Four main switching options exist:

   a. Unicast: Packets are sent according to the packet's destID to a single destination port in compliance with the *RapidIO Specification (Rev. 2.1)*.

   b. Multicast: Packets with a destID pointing to a multicast mask will multicast to all destination ports provided by the multicast mask. Multicasting is performed in compliance with the *RapidIO Specification (Rev. 2.1)*.

   c. Maintenance packets: In compliance with the *RapidIO Specification (Rev. 2.1)*, maintenance packets with hop_count > 0 pass through the switch. Maintenance packets with hop_count = 0 will operate on the switch.

   d. Broadcast: Each multicast mask can be configured so all output ports, including the source port, are included among the destination ports for that multicast operation. This feature is IDT-specific.

The CPS-1432 supports a peak throughput of 160 Gbps which is the line rate for 3 ports in 4x, 9 ports in 2x and 2 ports in 1x configuration, (each at 5.0 Gbaud = 6.25 Gbaud minus the S-RIO defined 8b/10b encoding), and switches dynamically in accordance with the packet headers and priorities.

5. Enhanced functions — Enhanced features are provided for support of system debug. These features which are optional for the user consist of following functions:

   a. Packet Trace: The Packet Trace feature provides at-speed checking of the first 160 bits (header plus a portion of any payload) of every incoming packet against user-defined comparison register values. The trace feature is available on all S-RIO ports, each acting independently from one another. If the trace feature is enabled for a port, every incoming packet is checked for a match against up to four comparison registers. If a match occurs, either of two possible user-defined actions may occur:

      i) Not only does the packet route normally through the switch to its appropriate destination port, but this same packet is copied to a "debug port" or "trace port." The trace port itself can be any of the standard S-RIO ports. The port used for the trace port is defined by the user through simple register configuration.

      ii) The packet is dropped. If there is no match, the packets route normally through the switch with no action taken. The Packet Trace feature can be used during system bring-up and prototyping to identify specific packet types of interest to the user. It might be used in security applications, where packets must be checked for either correct or incorrect tags in either of the header or payload. Identified (match) packets are then routed to the trace port for receipt by a host processor, which can perform an intervention at the software level.

   b. Port Loopback: The CPS-1432 offers internal loopback for each port that can be used for system debug of the high-speed S-RIO ports. By enabling loopback on a port, packets sent to the port's receiver are immediately looped back at the physical layer to the transmitter - bypassing the higher logical or transport layers.

   c. Broadcast: The device switching operation supports broadcast traffic (any input port to all output ports).

   d. Security functions: The aforementioned packet trace / filter capabilities allow packets matching trace criteria to be blocked at the input port. This function can, for example, allow untrusted (unknown source or destination) packets to be filtered, malicious or errant maintenance packets to be filtered, or boot packets to be identified to pass to a slave device.

The CPS-1432 can be programmed through any one or combination of S-RIO, I^2C, or JTAG. Note that any S-RIO port can be used for programming. The CPS-1432 can also configure itself on power-up by reading directly from EPROM over I^2C in master mode.

Specification Compliancy

- *RapidIO Specification (Rev. 2.1), Part 1: Input/Output Logical Specification, 08/2009, RTA*
- *RapidIO Specification (Rev. 2.1), Part 2: Message Passing Logical Specification, 08/2009, RTA*
- *RapidIO Specification (Rev. 2.1), Part 3: Common Transport Specification, 08/2009, RTA*
- *RapidIO Specification (Rev. 2.1), Part 6: LP-Serial Physical Layer Specification, 08/2009, RTA*
- *RapidIO Specification (Rev. 2.1), Part 7: System and Device Interoperability Specification, 08/2009, RTA*
- *RapidIO Specification (Rev. 2.1), Part 8: Error Management Extensions Specification, 08/2009, RTA*
- *RapidIO Specification (Rev. 2.1), Part 9: Flow Control Logic Layer Extensions Specification, 08/2009, RTA*
- *RapidIO Specification (Rev. 2.1), Part 11: Multicast Extensions Specification, 08/2009, RTA*
- *RapidIO Specification (Rev. 2.1), Annex I: Software/System Bring Up Specification, 08/2009, RTA*
- *IEEE Std 1149.1-2001 IEEE Standard Test Access Port and Boundary-Scan Architecture*
- *IEEE Std 1149.6-2003 IEEE Standard for Boundary-Scan Testing of Advanced Digital Networks*
- *The I^2C-BUS Specification* (v 2.1), January 2000, Philips

3. Functional Overview

The CPS-1432 is optimized for line card and backplane switching. Its primary function is to switch data plane and control plane data packets using S-RIO between a set of devices that reside on the same line card. In addition, it can bridge communications between multiple on-board (or local) devices and a set of external line cards by providing long run RapidIO backplane interconnects. In this manner, for example, the device can serve as a switch between a set of RF cards and a set of RapidIO based DSPs in a wireless basestation.

The CPS-1432 supports packet switching from its 14 RapidIO ports. Packets can be unicast, multicast, or broadcast. The encoded data rate for each of the lanes are configurable to either 1.25, 2.5, 3.125, 5, or 6.25 Gbaud. The device supports lane groupings such that 1x, 2x, and 4x operation is provided, as defined in the *RapidIO Specification (Rev. 2.1)*.

The CPS-1432 supports the reception of S-RIO maintenance packets (type 8) which are directed to it (that is, a hop count of 0). The device can properly process and forward received maintenance packets with a hop count > 0 as defined in the *RapidIO Specification (Rev. 2.1)*. With the exception of maintenance packets, received packets are transmitted unmodified.

The CPS-1432 supports four priority levels plus Critical Request Flow (CRF), as defined in the *RapidIO Specification (Rev. 2.1), Part 6*. It is programmable by all of the following: S-RIO ports, I^2C, and JTAG Interface.

From a switching perspective the CPS-1432 functions statically. As such, all input to output port mappings are configurable through registers. Unless register configurations are changed, the input to output mappings remains static regardless of the received data. The switching functionality does not dynamically “learn” which destIDs are tied to a port endpoint by examining S-RIO header fields and dynamically updating internal routing tables.

The CPS-1432 supports “Store and Forward” or “Cut-Through” packet forwarding (for more information, see the “Switch Fabric” chapter in the *CPS-1432 User Manual*).

4. Interface Overview

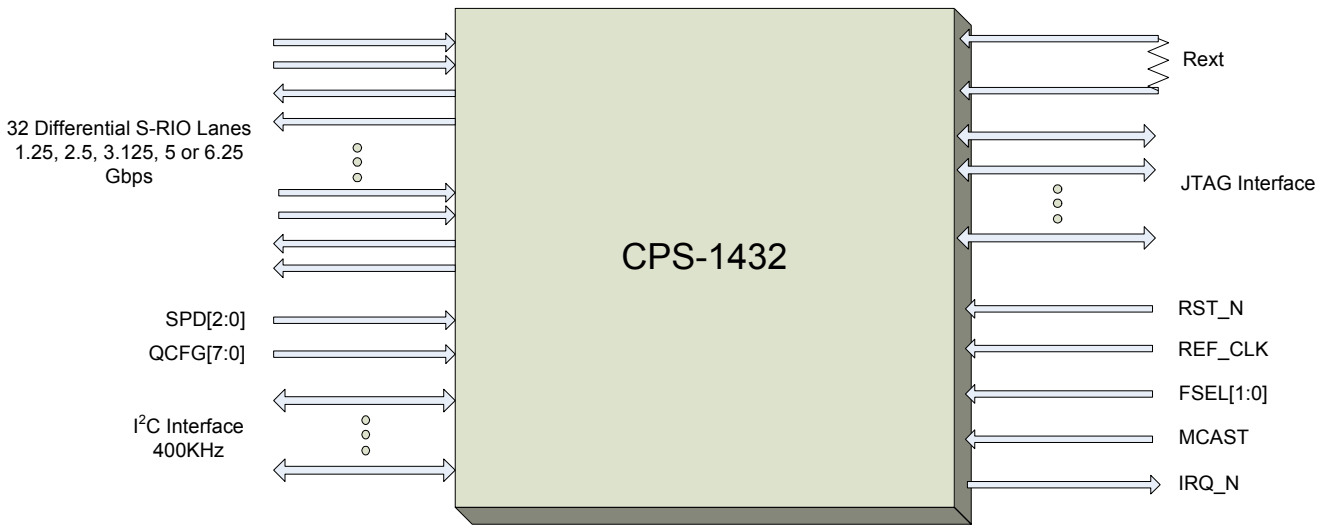

Figure 1: CPS-1432 Interfaces

S-RIO Ports

The S-RIO ports are the main communication ports on the chip. These ports are compliant with the *RapidIO Specification (Rev. 2.1)*. For more information, see the *RapidIO Specification (Rev. 2.1)*.

The device provides up to 32 S-RIO lanes. The encoded data rate for each of the lanes is configurable to either 1.25, 2.5, 3.125, 5, or 6.25 Gbaud as defined in the *RapidIO Specification (Rev. 2.1), Part 6*.

I^2C Bus

This interface can be used instead of the standard S-RIO or JTAG ports to program the chip and to check the status of registers - including the error reporting registers. It is fully compliant with the I^2C specification, it supports master and slave modes and supports both Fast and Standard-mode buses [1]. For more information, see I^2C Bus.

JTAG TAP Port

This TAP interface is IEEE1149.1 (JTAG) and 1149.6 (AC Extest) compliant [11, 12]. It can be used instead of the standard S-RIO or I^2C ports to program the chip and to check the status of registers - including the error reporting registers. It has 5 pins. For more information, see JTAG Interface.

Interrupt (IRQ_N)

An interrupt output is provided in support of Error Handling functionality. This output can flag a host processor if error conditions occur within the device. For more information, see the “Event Management" chapter in the *CPS-1432 User Manual*.

Reset (RST_N)

A single Reset pin is used for full reset of the CPS-1432, including setting all registers to power-up defaults. For more information, see the "Reset and Initialization" chapter in the *CPS-1432 User Manual*.

Clock (REF_CLK_P/N)

The single system clock (REF_CLK_P/N) is a 156.25-MHz differential clock.

Rext (REXT_N/P)

These pins establish the drive bias on the SerDes output. An external bias resistor is required. The two pins must be connected to one another with a 9.1k Ohm resistor. This provides robust SerDes stability across process and temperature.

Speed Select (SPD[2:0])

These pins define the S-RIO port speed at RESET for all ports. SPD[2:0] can be configured as follows:

- 000 = 1.25 Gbaud
- 001 = 2.5 Gbaud
- 01X = 5 Gbaud
- 100 = Reserved
- 101 = 3.125 Gbaud
- 11X = 6.25 Gbaud

For more information, see Speed Select Pins SPD[2:0].

Quadrant Config (QCFG[7:0])

These pins define the S-RIO port width (x1, x2, x4) at RESET for all ports. QCFG[1:0] defines port width for Quadrant 0, QCFG[3:2] defines port width for Quadrant 1, QCFG[5:4] defines port width for Quadrant 2, and QCFG[7:6] defines port width for Quadrant 3. For more information, see Quadrant Configuration Pins QCFG[7:0].

Frequency Select (FSEL[1:0])

FSEL1 pin defines the input reference clock, and FSEL0 pin defines the internal clock frequency, full or half rate.

Multicast (MCAST)

The Multicast-Event Control Symbol Trigger (MCAST) pin provides an optional mechanism to trigger the generation of a Multicast-Event Control Symbol. The multicast-event control symbol allows a user-defined system event to be multicast throughout a system (for example, synchronously reset a system or its internal timers).

5. Configuration Pins

Speed Select Pins SPD[2:0]

There are three port-speed selection pins that select the initial speed of the RapidIO ports (see Table 1). The RESET setting can be overridden by programming the PLL n Control 1 Register and Lane n Control Register (for more information, see "Lane and Port Speeds" in the *CPS-1432 User Manual*).

Table 1: Port Speed Selection Pin Values

Value on the Pins (SPD2, SPD1, SPD0)	Port Rate (Gbaud)
000	1.25
001	2.5
01X	5.0
100	Reserved
101	3.125
11X	6.25

Quadrant Configuration Pins QCFG[7:0]

There are eight quadrant configuration selection pins, QCFG[7:0], or two pins per quadrant (see Figure 2). These pins configure the device's power-up settings for port width and lane to port mapping. After power-up these settings can be changed by updating the Quadrant Configuration Register (for more information, see "Lane to Port Mapping" in the *CPS-1432 User Manual*).

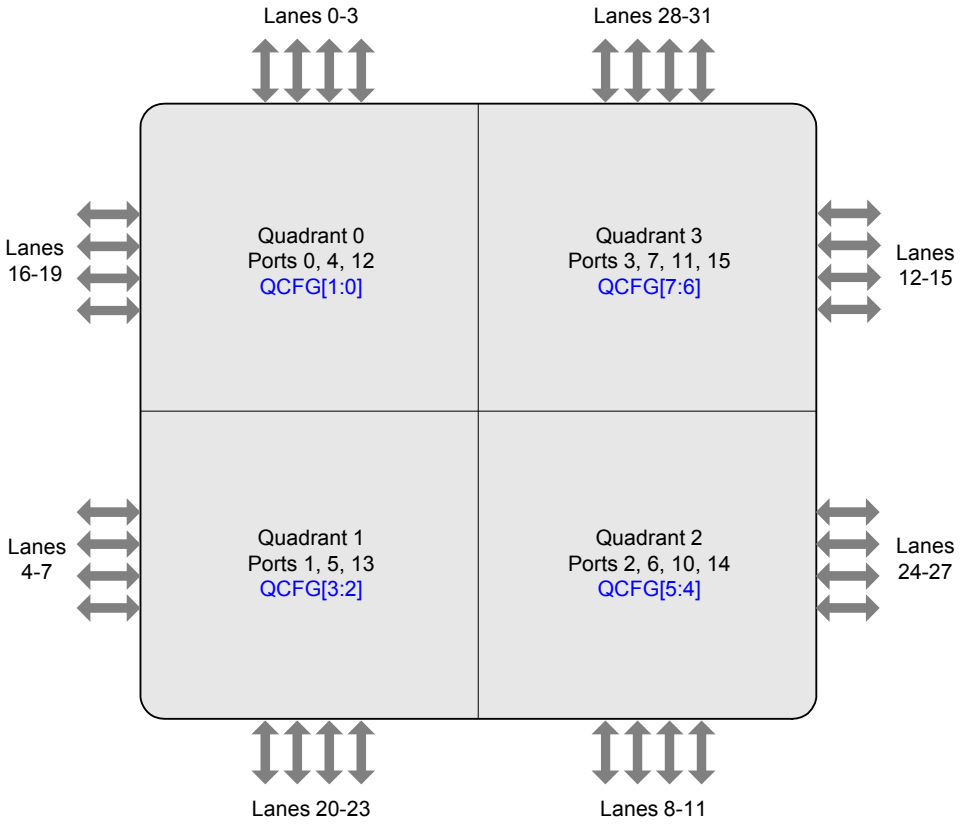

Figure 2: Quadrant Configuration using QCFG[7:0]

Figure 3 shows the relationship between the Quadrant, Port, and Lane settings, based on the configuration of the device's QCFG[7:6] pins.

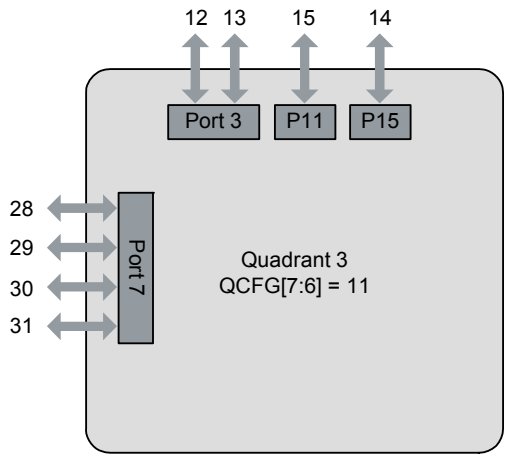

Figure 3: Quadrant 3 Configuration Example - QCFG[7:6] = 11

The following describes the complete lane-to-port mapping options for the CPS-1432 based on the setting of the QCFG[7:0] pins.

Table 2: Lane to Port Mapping

Quadrant	QCFG Pins	QCFG Pin Setting	PLL	Port Width	Mapping	
					Port	Lane(s)
0	QCFG[1:0]	00	0	4x	0	0–3
			4	4x	4	16–19
		01	0	2x	0	0–1
			4	4x	4	16–19
			0	2x	12	2–3
		10	Undefined			
		11	Undefined			
1	QCFG[3:2]	00	1	4x	1	4–7
			5	4x	5	20–23
		01	1	2x	1	4–5
			5	4x	5	20–23
			1	2x	13	6–7
		10	Undefined			
		11	Undefined			

Table 2: Lane to Port Mapping (Continued)

Quadrant	QCFG Pins	QCFG Pin Setting	PLL	Port Width	Mapping	
					Port	Lane(s)
2	QCFG[5:4]	00	2	4x	2	8–11
			6	4x	6	24–27
		01	2	2x	2	8–9
			6	4x	6	24–27
			2	2x	14	10–11
		10	2	2x	2	8–9
			6	2x	6	24–25
			6	2x	10	26–27
			2	2x	14	10–11
		11	2	2x	2	8–9
			6	4x	6	24–27
			2	1x	10	11
			2	1x	14	10
3	QCFG[7:6]	00	3	4x	3	12–15
			7	4x	7	28–31
		01	3	2x	3	12–13
			7	4x	7	28–31
			3	2x	15	14–15
		10	3	2x	3	12–13
			7	2x	7	28–29
			7	2x	11	30–31
			3	2x	15	14–15
		11	3	2x	3	12–13
			7	4x	7	28–31
			3	1x	11	15
			3	1x	15	14

The CPS-1432 supports ports 0 to 15; however, ports 8 and 9 are not available to the device. In order to reduce power consumption, IDT recommends that these ports be disabled. Refer to the User Manual for the specific register.

6. Absolute Maximum Ratings

Table 3: Absolute Maximum Rating[1]

Symbol	Parameter	Rating		Unit
		Minimum	Maximum	
V_{DD3}	V_{DD3} voltage with respect to GND	-0.5	3.6	V
V_{DD}	V_{DD} voltage with respect to GND	-0.5	1.2	V
V_{DDT}	V_{DDT} voltage with respect to GNDS (V_{DDS} = 0V)	-0.5	1.2	V
	V_{DDT} voltage with respect to GNDS (V_{DDS} = 1.0V)	-0.5	1.4	V
V_{DDA} and V_{DDS}	V_{DDA} AND V_{DDS} voltage with respect to GNDS	-0.5	1.2	V
T_{BIAS}[2]	Temperature under bias	-55	125	C
T_{STG}	Storage temperature	-65	150	C
T_{JN}	Junction temperature	-	125	C
I_{OUT} (for V_{DD3} = 3.3V)	DC output current	-	30	mA
I_{OUT} (for V_{DD3} = 2.5V)	DC output current	-	30	mA

Notes:

1. Stresses greater than those listed under Absolute Maximum Ratings can cause permanent damage to the device. This is a stress rating only and functional operation of the device at these or any other conditions above those indicated in the operational sections of this specification is not implied. Exposure to absolute maximum rating conditions for extended periods can affect reliability.
2. Ambient Temperature under DC Bias, no AC conditions. Can not exceed maximum Junction temperature.
3. IDT recommends not to exceed ripple voltage of 50 mV max on $V_{DDT}/V_{DDS}/V_{DDA}$ and 50 mV/100 mV (maximum) on V_{DD}/V_{DD3} respectively.

7. Recommended Operating Conditions

Table 4: Recommended Operating Conditions[1]

Symbol[2]	Parameter	Rating		Unit
		Minimum	Maximum	
V_{DD3}-supplied interfaces[3 5]	Input or I/O terminal voltage with respect to GND	-0.3	V_{DD3} + 0.3	V
V_{DD}	V_{DD} voltage with respect to GND	0.95	1.05	V
V_{DDA} and V_{DDS}[4]	V_{DDA} AND V_{DDS} voltage with respect to GNDS	0.95	1.05	V
V_{DDT}	V_{DDT} voltage with respect to GNDS	1.14	1.26	V
V_{DD3} and V_{DD3A}	V_{DD3} voltage (3.3 V) with respect to GND	3.14	3.47	V
	V_{DD3} voltage (2.5 V) with respect to GND	2.4	2.6	V

Notes:

1. The following power-up sequence is necessary in order for the device to function properly: The SerDes voltage (V_{DDS}) needs to power-up first followed by SerDes voltage (V_{DDT}). V_{DD}, V_{DDA}, and $V_{DD3(a)}$ can be powered up in any order. The device is not sensitive to supply rise and fall times, and thus these are not specified.
2. V_{DDT}, V_{DDA}, and V_{DDS} share a common ground (GNDS). Core supply and ground are V_{DD} and GND respectively.
3. V_{DD3} can be operated at either 3.3V or 2.5V simply by providing that supply voltage. For those interfaces operating on this supply, this datasheet provides input and output specifications at each of these voltages.
4. V_{DDS} and V_{DDA} can be tied to a common power plane. V_{DD} (core, digital supply) should have its own power plane. If the same voltage regulator is used for V_{DDS}/V_{DDA} and V_{DD}, the V_{DDS}/V_{DDA} plane should be isolated to prevent noise from the V_{DD} plane to couple onto the V_{DDS}/V_{DDA} plane.
5. This is a steady-state DC parameter that applies after the power supply has reached its nominal operating value. The voltage on any Input or I/O pin cannot exceed its corresponding supply voltage during power supply ramp up.

8. AC Test Conditions

Table 5: AC Test Conditions (V_{DD3} = 3.3V / 2.5V): JTAG, I^2C, RST

Input Pulse Levels	GND to 3.0V / GND to 2.4V
Input Rise / Fall Times	2 ns
Input Timing Reference Levels	1.5V / 1.25V
Output Reference Levels	1.5V / 1.25V
Output Load	See Figure 4

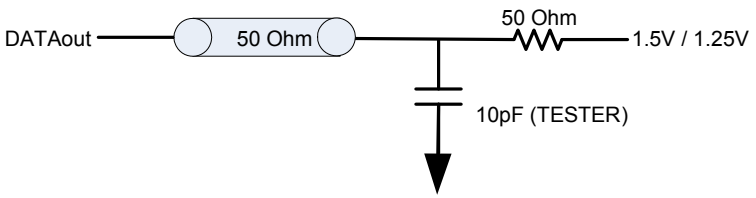

Figure 4: AC Output Test Load (JTAG)

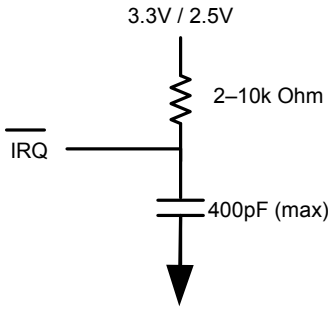

Figure 5: AC Output Test Load (IRQ)

Note: The IRQ_N pin is an open-drain driver. IDT recommends a weak pull-up resistor (2-10k Ohm) be placed on this pin to V_{DD3}.

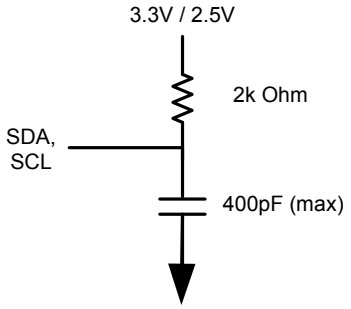

Figure 6: AC Output Test Load (I^2C)

Note: The SDA and SCL pins are open-drain drivers. For information on the appropriate selection of pull-up resistors for each, see the *Philips I^2C Specification* [1].

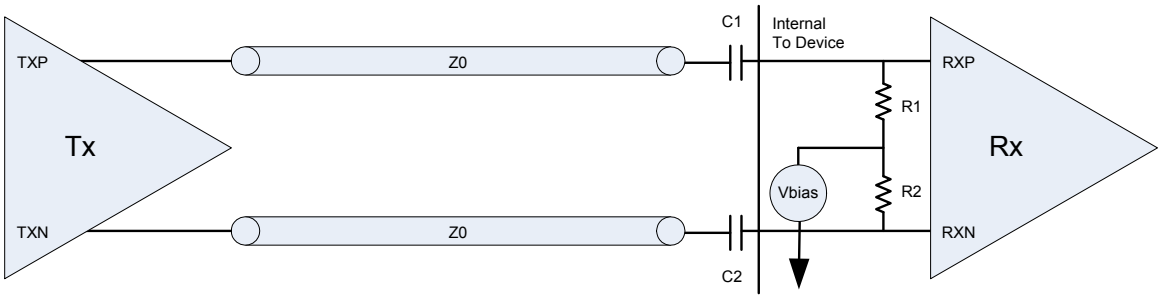

Figure 7: S-RIO Lanes Test Load

The characteristic impedance Z0 should be designed for 100 Ohms differential. An inline capacitor C1 and C2 at each input of the receiver provides AC-coupling and a DC-block. The IDT recommended values are 75 - 200nF for each. Thus, any DC bias differential between the two devices on the link is negated. The differential input resistance at the receiver is 100 Ohms, as defined in the *RapidIO Specification (Rev. 2.1)*. Thus, R1 and R2 are 50 Ohms each. Note that V_{BIAS} is the internal bias voltage of the device's receiver.

9. Power Consumption

Heat generated by the packaged IC and increase in voltage supplies have an adverse effect on the device power consumption. In order to control its functional and maximum design temperature limits, IDT recommends at a minimum to use a heat sink. The typical and maximum power numbers provided below take into consideration the heat sink with the following characteristics, Theta Ja = 4.2^{o}C/W with 1m/s of airflow. For more information on thermal analysis, see Thermal Characteristics.

An estimate of the device power figure for an application usage can be determined by using the device's "Power Calculator" modeling tool available on the IDT secure site.

The *typical* power condition refers to nominal voltage for all rails and is 7.6W in total for all ports enabled as 3 4x, 9 2x and 2 1x at 6.25 Gbaud under 50% switch load.

The *maximum* power condition refers to maximum voltage for all rails and is 11.8W in total for all ports enabled as 3 4x, 9 2x and 2 1x at 6.25 Gbaud under 100% switch load.

Table 6: Power Consumption

Line Rate Gbaud	Current/ Power	Power Supplies											
		Core Supply (V_{DD})		SerDes Supply (V_{DDS})		SerDes Supply Xmt (V_{DDT})		PLL Supply (V_{DDA})		I/O Supply (V_{DD3})		Total	
		Typ 1.0V	Max 1.05V	Typ 1.0V	Max 1.05V	Typ 1.2V	Max 1.26V	Typ 1.0V	Max 1.05V	Typ 3.3V	Max 3.47V	Typ Power	Max Power
6.25	Amps	4.46	7.67	1.68	1.89	0.96	1.04	0.30	0.36	0.016	0.030		
	Watts	4.46	8.05	1.68	1.98	1.15	1.31	0.30	0.378	0.053	0.108	7.64	11.83
5.0	Amps	4.36	7.58	1.56	1.74	0.97	1.04	0.27	0.33	0.016	0.030		
	Watts	4.36	7.96	1.56	1.83	1.16	1.31	0.27	0.347	0.053	0.108	7.40	11.56
3.125	Amps	4.20	7.42	1.39	1.54	0.96	1.04	0.30	0.36	0.016	0.030		
	Watts	4.20	7.79	1.39	1.62	1.15	1.31	0.30	0.378	0.053	0.108	7.09	11.21
2.5	Amps	4.14	7.37	1.33	1.46	0.96	1.04	0.27	0.33	0.016	0.030		
	Watts	4.14	7.74	1.33	1.53	1.15	1.31	0.27	0.347	0.053	0.108	6.94	10.98
1.25	Amps	4.04	7.29	1.21	1.33	0.96	1.04	0.27	0.33	0.016	0.030		
	Watts	4.04	7.65	1.21	1.40	1.15	1.31	0.27	0.347	0.053	0.108	6.72	10.82

Notes:

1. Typical conditions: V_{DD}, V_{DDS}, V_{DDA} = 1.0V, V_{DDT} = 1.2V, V_{DD3} = 3.3V at Ambient Temperature of 60°C with heat sink (Theta Ja = 4.2^{o}C/W @ 1m/s airflow).
2. Maximum conditions: V_{DD}, V_{DDS}, V_{DDA} = 1.05V, V_{DDT} = 1.26V, V_{DD3} = 3.47V at max Junction Temperature (125°C).

10. I²C Bus

The CPS-1432 is compliant with the I²C specification [1]. This specification provides the functional information and electrical specifications associated with the I²C bus, including signaling, addressing, arbitration, AC timing, and DC specifications. The CPS-1432 supports both master mode and slave mode, which is selected by MM_N pin.

The I²C bus consists of the Serial Data (SDA) and Serial Clock (SCL) pins. It can be used to attach a CPU or a configuration memory. The I²C Interface supports Fast/Standard (F/S) mode (400/100 kHz).

I²C Master Mode and Slave Mode

The CPS-1432 support both master mode and slave mode. The operating mode is selected by the MM_N static configuration pin. For more information, see Signaling.

I²C Device Address

The device address for the CPS-1432 is fully pin-defined by 10 external pins while in slave mode. This provides full flexibility in defining the slave address to avoid conflicting with other I²C devices on a bus. The CPS-1432 can be operated as either a 10-bit addressable device or a 7-bit addressable device based on another external pin, address select (ADS). If the ADS pin is tied to V_{DD3}, then the CPS-1432 operates as a 10-bit addressable device and the device address will be defined as ID[9:0]. If the ADS pin is tied to GND, then the CPS-1432 operates as a 7-bit addressable device with the device address defined by ID[6:0]. The addressing mode must be established at power-up and remain static throughout operation. Dynamic changes will result in unpredictable behavior.

Table 7: I²C Static Address Selection Pin Configuration

Pin	I²C Address Bit (pin_addr)
ID9	9 (don't care in 7-bit mode)
ID8	8 (don't care in 7-bit mode)
ID7	7 (don't care in 7-bit mode)
ID6	6
ID5	5
ID4	4
ID3	3
ID2	2
ID1	1
ID0	0

All of the CPS-1432's registers are addressable through I²C. These registers are accessed using 22-bit addresses and 32-bit word boundaries through standard reads and writes. These registers also can be accessed through the S-RIO and JTAG Interfaces.

Signaling

Communication with the CPS-1432 on the I^2C bus follows these three cases:

1. Suppose a master device wants to send information to the CPS-1432:
   - Master device addresses CPS-1432 (slave)
   - Master device (master-transmitter), sends data to CPS-1432 (slave- receiver)
   - Master device terminates the transfer
2. If a master device wants to receive information from the CPS-1432:
   - Master device addresses CPS-1432 (slave)
   - Master device (master-receiver) receives data from CPS-1432 (slave- transmitter)
   - Master device terminates the transfer
3. If CPS-1432 polls configuration image from external memory
   - CPS-1432 addresses the memory
   - Memory transmits the data
   - CPS-1432 gets the data

All signaling is fully compliant with I^2C (for signaling information, see the Philips *I^2C Specification*) [1]. Standard signaling and timing waveforms are displayed below.

Connecting to Standard-, Fast-, and Hs-mode Devices

The CPS-1432 supports Fast/Standard (F/S) modes of operation. Per I^2C specification, in mixed speed communication the CPS-1432 supports Hs- and Fast-mode devices at 400 Kbps, and Standard-mode devices at 100 Kbps. For information on speed negotiation on a mixed speed bus, see the I^2C specification.

CPS-1432-Specific Memory Access (Slave Mode)

There is a CPS-1432-specific I^2C memory access implementation. This implementation is fully I^2C compliant. It requires the memory address to be specified during writes. This provides directed memory accesses through the I^2C bus. Subsequent reads begin at the address specified during the last write.

The write procedure requires the 3 bytes (22 bits) of memory address to be provided following the device address. Thus, the following are required: device address – one or two bytes depending on 10-bit / 7-bit addressing, memory address – 3 bytes yielding 22 bits of memory address, and a 32-bit data payload – 4-byte words. To remain consistent with S-RIO standard maintenance packet memory address convention, the I^2C memory address provided must be the 22 MSBs. Since I^2C writes to memory apply to double-words (32 bits), the two LSBs are “don’t care” as the LSBs correspond to word and byte pointers.

The read procedure has the memory address section of the transfer removed. Thus, to perform a read, the proper access would be to perform a write operation and issue a repeated start after the acknowledge bit following the third byte of memory address. Then, the master would issue a read command selecting the CPS-1432 through the standard device address procedure with the R/W bit high. Note that in 10-bit device address mode (ADS=1), only the two MSBs need be provided during this read. Data from the previously loaded address would immediately follow the device address protocol. A stop or repeated start can be issued anytime during the write data payload procedure, but must be before the final acknowledge; that is, canceling the write before the write operation is completed and performed. Also, the master would be allowed to access other devices attached to the I^2C bus before returning to select the CPS-1432 for the subsequent read operation from the loaded address.

Read/Write Figures

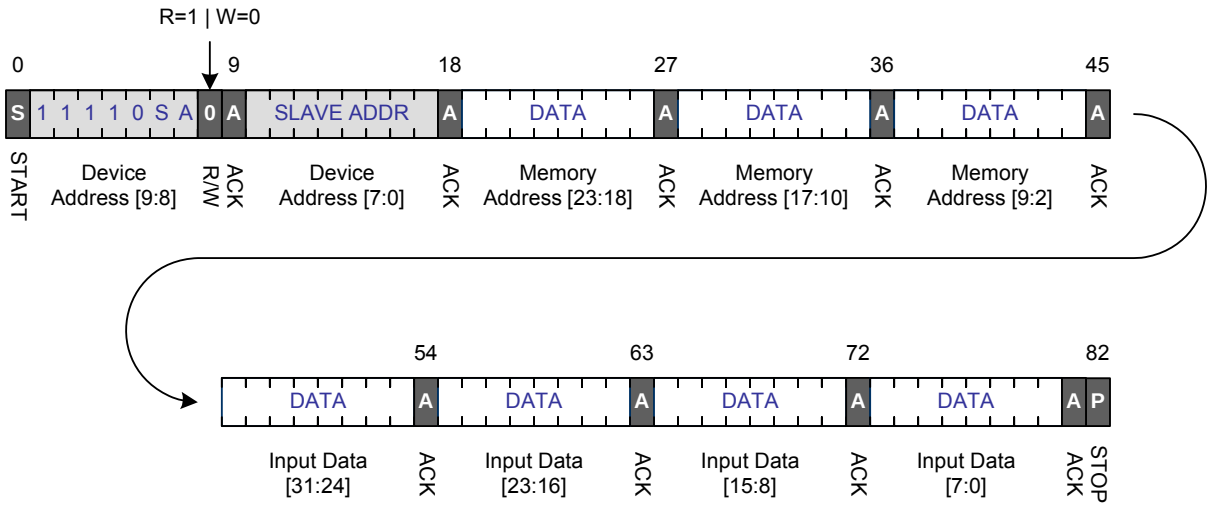

Figure 8: Write Protocol with 10-bit Slave Address (ADS is 1)

I^{2}C writes to memory align on 32-bit word boundaries, thus the 24 address MSBs must be provided while the two LSBs associated with word and byte pointers are “don’t care”, and therefore are not transmitted.

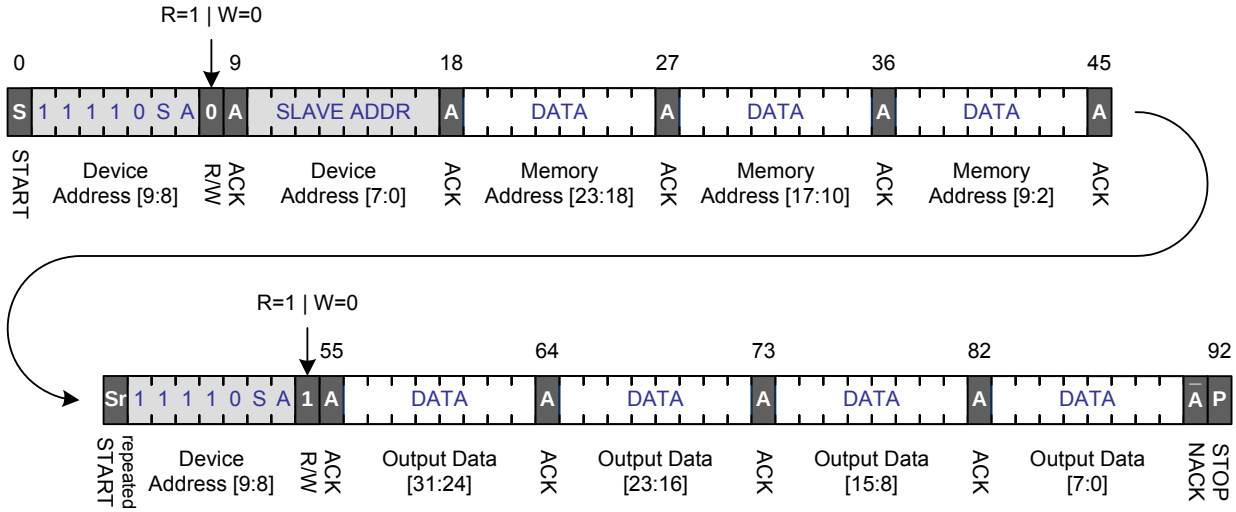

Figure 9: Read Protocol with 10-bit Slave Address (ADS is 1)

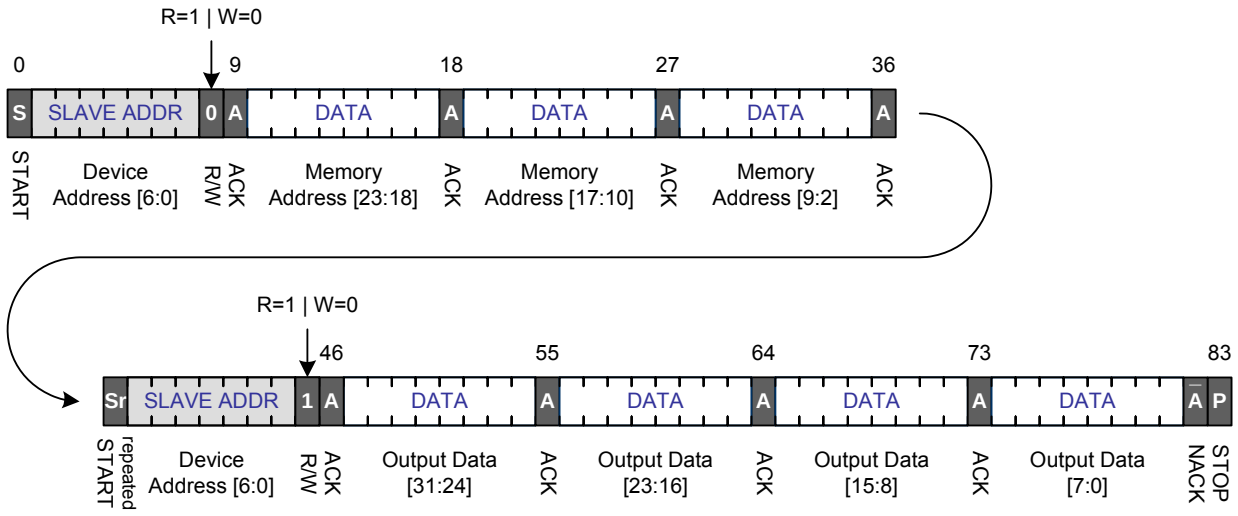

Figure 10: Write Protocol with 7-bit Slave Address (ADS is 0)

I^{2}C writes to memory align on 32-bit word boundaries, thus the 24 address MSBs must be provided while the two LSBs associated with word and byte pointers are “don’t care”, and therefore are not transmitted.

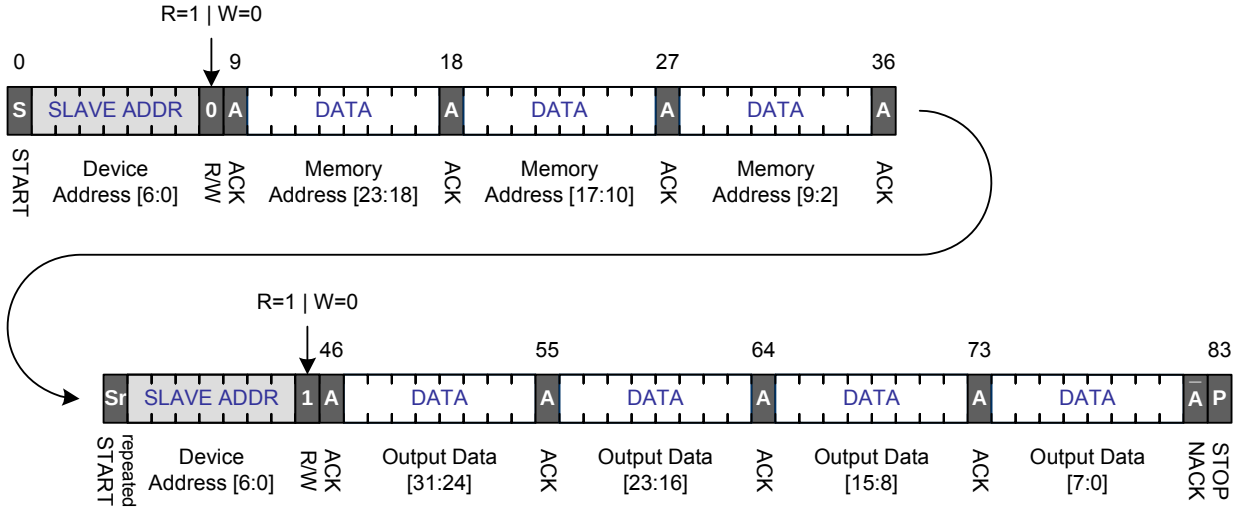

Figure 11: Read Protocol with 7-bit Slave Address (ADS is 0)

CPS-1432 Configuration and Image (Master mode)

There is both a power-up master and a command master mode. If powered up in master mode, the CPS-1432 polls configuration image from external memory after the device reset sequence has completed. Once the device has completed its configuration sequence, it will revert to slave mode. Through a configuration register write, the device can be commanded to enter master mode, which provides more configuration sequence flexibility. For more information, see the “I^{2}C Interface” chapter in the *CPS-1432 User Manual*.

I²C DC Electrical Specifications

Note that the ADS and ID pins will all run off the V_{DD3} (3.3V/2.5V) power supply, and these pins are required to be fixed during operation. Thus, these pins must be statically tied to the 3.3V/2.5V supply or GND.

Table 8 to Table 10 list the SDA and SCL electrical specifications for F/S-mode I²C devices.

At recommended operating conditions with V_{DD3} = 3.3V ± 5%.

Table 8: I²C DC Electrical Specifications (3.3V)

Parameter	Symbol	Min	Max	Unit
Input high voltage level	V_{IH}	0.7 x V_{DD3}	$V_{DD3(max)}$ + 0.5	V
Input low voltage level	V_{IL}	-0.5	0.3 x V_{DD3}	V
Hysteresis of Schmitt trigger inputs	V_{HYS}	0.05 x V_{DD3}	-	V
Output low voltage	V_{OL}	0	0.4	ns
Output fall time from $V_{IH(min)}$ to $V_{IL(max)}$ with a bus capacitance from 10pF to 400pF	t_{OF}	20 + 0.1 x C_b	250	ns
Pulse width of spikes which must be suppressed by the input filter	t_{SP}	0	50	ns
Input current each I/O pin (input voltage is between 0.1 x V_{DD3} and 0.9 x V_{DD3} (max))	I_I	-10	10	uA
Capacitance for each I/O pin	C_I	-	10	pF

At recommended operating conditions with V_{DD3} = 2.5V ± 100mV.

Table 9: I²C DC Electrical Specifications (2.5V)

Parameter	Symbol	Min	Max	Unit
Input high voltage level	V_{IH}	0.7 x V_{DD3}	$V_{DD3(max)}$ + 0.1	V
Input low voltage level	V_{IL}	-0.5	0.3 x V_{DD3}	V
Hysteresis of Schmitt trigger inputs	V_{HYS}	0.05 x V_{DD3}	-	V
Output low voltage	V_{OL}	0	0.4	ns
Output fall time from $V_{IH(min)}$ to $V_{IL(max)}$ with a bus capacitance from 10pF to 400pF	t_{OF}	20 + 0.1 x C_b	250	ns
Pulse width of spikes which must be suppressed by the input filter	t_{SP}	0	50	ns
Input current each I/O pin (input voltage is between 0.1 x V_{DD3} and 0.9 x V_{DD3} (max))	I_I	-10	10	uA
Capacitance for each I/O pin	C_I	-	10	pF

I²C AC Electrical Specifications

Table 10: Specifications of the SDA and SCL Bus Lines for F/S-mode I²C Bus Devices

Signal I²C(1,4)	Symbol	Reference Edge	Standard Mode		Fast Mode		Unit
			Min	Max	Min	Max	
SCL	f_{SCL}	none	0	100	0	400	kHz
	$t_{HD;STA}$		4.0	-	0.6	-	us
	tr		-	1000	-	300	ns
	t_F		-	300	-	300	ns
SDA(2,3)	$t_{SU;DAT}$	SCL rising	250	-	100	-	ns
	$t_{HD;DAT}$	SCL falling	0	3.45	0	0.9	us
	tr	-	-	1000	10	300	ns
	t_F	-	-	300	10	300	ns
Start or repeated start condition	$t_{SU;STA}$	SDA falling	4.7	-	0.6	-	us
	$t_{SU;STO}$		4.0	-	0.6	-	us
Stop condition	$t_{SU;STO}$	SDA rising	4.0	-	0.6	-	us
Bus free time between a stop and start condition	t_{BUF}	-	4.7	-	1.3	-	us
Capacitive load for each bus line	C_B	-	-	400	-	400	pF

Notes:

1. For more information, see the *I²C-Bus Specification* by Philips Semiconductor.
2. A device must internally provide a hold time of at least 300 ns for the SDA signal (referred to the V_{IHMIN} of the SCL signal) to bridge the undefined region of the falling edge of SCL.
3. The maximum $t_{HD;DAT}$ has only to be met if the device does not stretch the LOW period (t_{LOW}) of the SCL signal.
4. A Fast-mode I²C-bus device can be used in a Standard-mode I²C-bus system, but the requirement $t_{SU;DAT} \geq 250$ ns must then be met. This will automatically be the case if the device does not stretch the LOW period of the SCL signal. If such a device does stretch the LOW period of the SCL signal, it must output the next data bit to the SDA line $t_{RMAX} + t_{SU;DAT} = 1000 + 250 = 1250$ ns (according to the Standard-mode *I²C-Bus Specification*) before the SCL line is released.

I²C Timing Waveforms

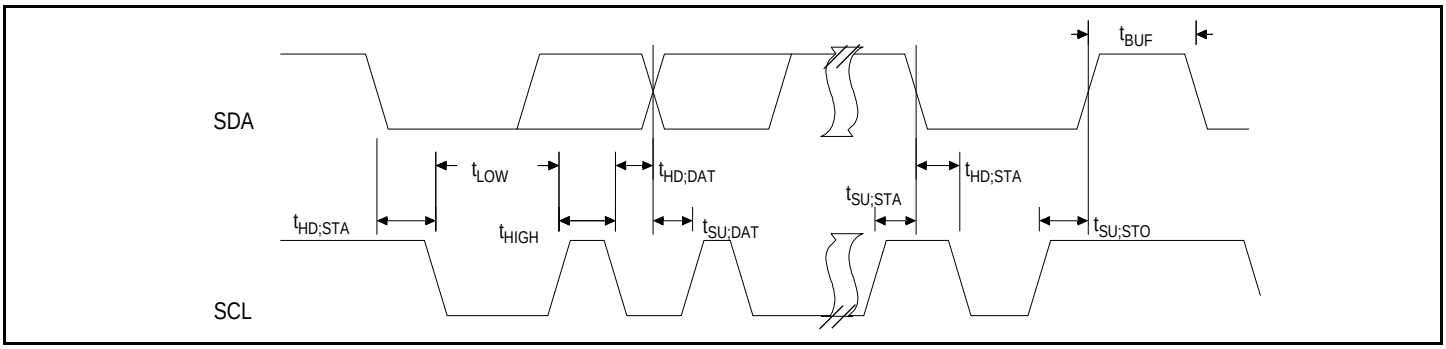

Figure 12: I²C Timing Waveforms

11. Interrupt (IRQ_N) Electrical Specifications

At recommended operating conditions with V_{DD3} = 3.3V ± 5%.

Table 11: IRQ_N Electrical Specifications (V_{DD3} = 3.3V ± 5%)

Parameter	Symbol	Min	Max	Unit
Output low voltage (I_{OL} = 4mA, V_{DD3} = Min.)	V_{OL}	0	0.4	V
Output fall time from $V_{IH(min)}$ to $V_{IL(max)}$ with a bus capacitance from 10pF to 400pF	t_{OF}	-	25	ns
Input current each I/O pin (input voltage is between 0.1 x V_{DD3} and 0.9 x V_{DD3} (max))	I_I	-10	10	uA
Capacitance for IRQ_N	C_I	-	10	pF

At recommended operating conditions with V_{DD3} = 2.5V ± 100mV.

Table 12: IRQ_N Electrical Specifications (V_{DD3} = 2.5V ± 100mV)

Parameter	Symbol	Min	Max	Unit
Output low voltage (I_{OL} = 2mA, V_{DD3} = Min.)	V_{OL}	0	0.4	V
Output fall time from $V_{IH(min)}$ to $V_{IL(max)}$ with a bus capacitance from 10pF to 400pF	t_{OF}	-	25	ns
Input current each I/O pin (input voltage is between 0.1 x V_{DD3} and 0.9 x V_{DD3} (max))	I_I	-10	10	uA
Capacitance for IRQ_N	C_I	-	10	pF

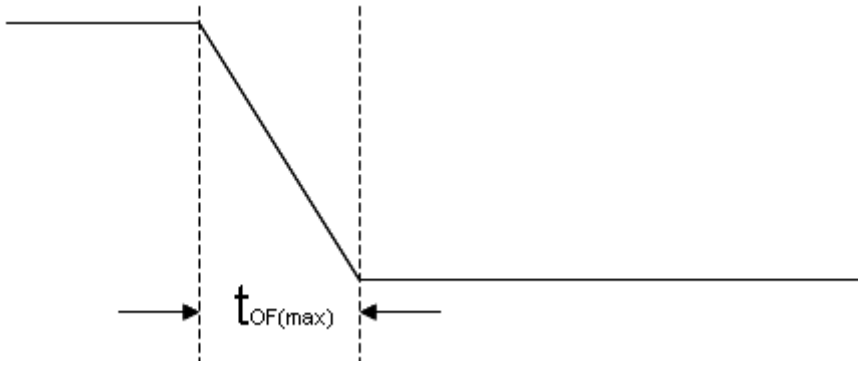

Figure 13: IRQ_N Timing Diagram

The IRQ_N pin is an open-drain driver. IDT recommends a weak pull-up resistor (2-10k Ohm) be placed on this pin to V_{DD3}. The IRQ_N pin goes active low when any special error filter error flag is set, and is cleared when all error flags are reset.

12. Configuration (Static) Pin Specification

The following are the configuration pins this specification applies to; FSEL[1:0], MCAST[2], RST_N, QCFG[7:0] and SPD[2:0].

Table 13: Configuration Pin Electrical Specification[1]

		Min		Max		
Parameter	Symbol	2.5V	3.3V	2.5V	3.3V	Unit
Input Low Voltage	V_{IL}	-0.3	-0.3	0.7	0.8	V
Input High Voltage	V_{IH}	1.7	2.0	2.8	3.6	V

Notes:

1. Configuration pins must be set prior to or coincident with reset de-assertion and remain static following reset de-assertion. Any change on the configuration pins after reset is de-asserted can result in unexpected behavior.
2. The MCAST pin is asynchronous signal and sampled on the rising edge of the internal core clock.

The following internal pull-up resistor specification applies to following configuration pins; FSEL[1:0], MM_N, QCFG[7:0], TDI, TMS and TRST_N.

Table 14: Pull-up Resistor Specification

Parameter	Min	Typ	Max	Unit
Pull-up Resistor Values	29	39	63	K Ohms

13. S-RIO Ports

Overview

The CPS-1432's SerDes are in full compliance to the RapidIO AC specifications for the LP-Serial Physical Layer [5]. This section provides those specifications for reference only; the user should see the specification for complete requirements.

Chapter 9 of the LP-Serial Physical Layer Specification, "1.25 Gbaud, 2.5 Gbaud, and 3.125 Gbaud LP-Serial Links" defines Level I links compatible with the 1.3 version of the Physical Layer Specification, that supports throughput rates of 1.25, 2.5, and 3.125 Gbaud. Chapter 10 of the specification, "5 Gbaud and 6.25 Gbaud LP-Serial Links" defines Level II links that support throughput rates of 5 and 6.25 Gbaud.

A Level I link should:

- Allow 1.25, 2.5, or 3.125 Gbaud rates
- Support AC coupling
- Support hot swap
- Support short run (SR) and long run (LR) links achieved with two transmitters
- Support single receiver specification that will accept signals from both the short run and long run transmitter specifications
- Achieve Bit Error Ratio of lower than 10^{-12} per lane

A Level II link should:

- Allow 5 or 6.25 Gbaud baud rates
- Support AC coupling
- Support hot swap
- Support short run (SR), medium run (MR), and long run (LR) links achieved with two transmitters and two receivers
- Achieve Bit Error Ratio of lower than 10^{-15} per lane

Together, these specifications allow for solutions ranging from simple chip-to-chip interconnect to board-to-board interconnect driving two connectors across a backplane. The faster and wider electrical interfaces specified here are required to provide higher density and/or lower cost interfaces.

The short run defines a transmitter and a receiver that should be used mainly for chip-to-chip connections on either the same printed circuit board or across a single connector. This covers the case where connections are made to a mezzanine (daughter) card. The smaller swings of the short run specification reduces the overall power used by the transceivers.

The long run defines a transmitter and receiver that use larger voltage swings and channel equalization that allows a user to drive signals across two connectors and backplanes.

The two transmitter specifications allows for a medium run specification that also uses larger voltage swings that can drive signals across a backplane but simplifies the receiver requirements to minimize power and complexity. This option has been included to allow the system integrator to deploy links that take advantage of either channel materials and/or construction techniques that reduce channel loss to achieve lower power systems.

The electrical specifications are based on loss, jitter, and channel cross-talk budgets and defines the characteristics required to communicate between a transmitter and a receiver using nominally 100 Ohm differential copper signal traces on a printed circuit board. Rather than specifying materials, channel components, or configurations, this specification focuses on effective channel characteristics. Therefore, a short length of poorer material should be equivalent to a longer length of premium material. A 'length' is effectively defined in terms of its attenuation rather than physical distance.

Definition of Amplitude and Swing

LP-Serial links use differential signaling. This section defines the terms used in the description and specification of these differential signals. Figure 14 shows how these signals are defined and sets out the relationship between absolute and differential voltage amplitude. The figure shows waveforms for either the transmitter output (TD and TD_N) or a receiver input (RD and RD_N).

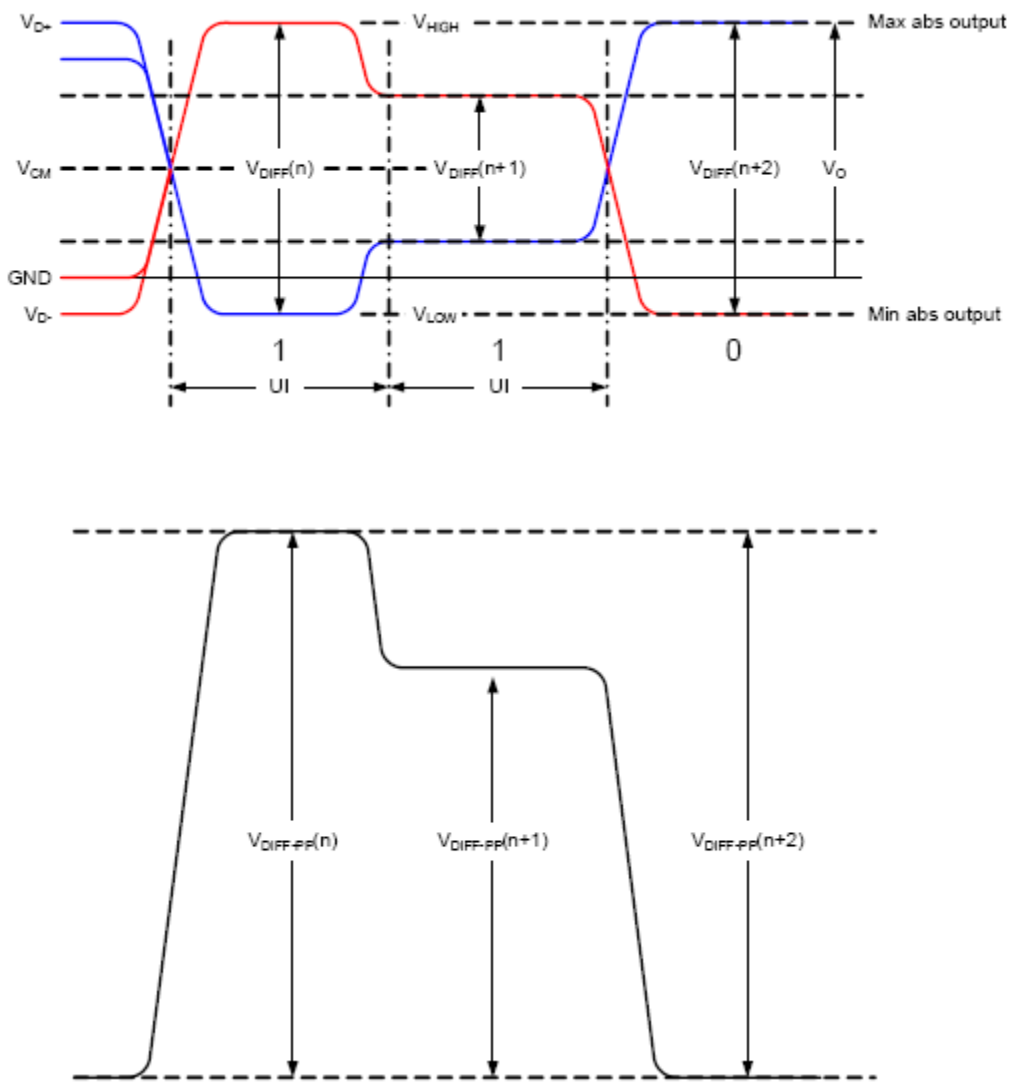

Figure 14: Definition of Transmitter Amplitude and Swing

Each signal swings between the voltages VHIGH and VLOW where

VHIGH > VLOW

The differential voltage, V_{DIFF} is defined as

$V_{DIFF} = V_{D+} - V_{D-}$

where V_{D+} is the voltage on the positive conductor and V_{D-} is the voltage on the negative conductor of a differential transmission line. V_{DIFF} represents either the differential output signal of the transmitter, V_{OD}, or the differential input signal of the receiver, V_{ID} where

$V_{OD} = V_{TD} - V_{\overline{TD}}$

and

$V_{ID} = V_{RD} - V_{\overline{RD}}$

The common mode voltage, V_{CM}, is defined as the average or mean voltage present on the same differential pair. Therefore

$V_{CM} = | V_{D+} + V_{D-} | / 2$

The maximum value, or the peak-to-peak differential voltage, is calculated on a per unit interval and is defined as

$V_{DIFFp-p} = 2 \times \max | V_{D+} - V_{D-} |$

because the differential signal ranges from $V_{D+} - V_{D-}$ to $-(V_{D+} - V_{D-})$

To illustrate these definitions using real values, consider the case of a CML (Current Mode Logic) transmitter and each of its outputs, TD and TD_N, has a swing that goes between V_{HIGH} = 2.5V and V_{LOW} = 2.0V, inclusive. Using these values the common mode voltage is calculated to be 2.25 V and the single-ended peak voltage swing of the signals TD and TD_N is 500 mVpp. The differential output signal ranges between 500 mV and -500 mV, inclusive. therefore the peak-to-peak differential voltage is 1000 mVppd.

1.25, 2.5, and 3.125 Gbaud LP-Serial Links

This section explains the requirements for Level I RapidIO LP-Serial short and long run electrical interfaces of nominal baud rates of 1.25, 2.5, and 3.125 Gbaud using NRZ coding (thus, 1 bit per symbol at the electrical level). The CPS-1432's SerDes meet all of the requirements listed below. The electrical interface is based on a high speed, low voltage logic with a nominal differential impedance of 100 Ohm. Connections are point-to-point balanced differential pair and signaling is unidirectional.

The level of links defined in this section are identical to those defined in the *RapidIO Specification (Rev. 1.3)*, 1x/4x LP-Serial Electrical Specification.

Equalization

With the use of high speed serial links, the interconnect media will cause degradation of the signal at the receiver. Effects such as Inter-Symbol Interference (ISI) or data dependent jitter are produced. This loss can be large enough to degrade the eye opening at the receiver beyond what is allowed in the specification. To negate a portion of these effects, equalization can be used in the transmitter and/or receiver, but it is not required at baud rates less than 3.5 Gbaud.

Explanatory Note on Level I Transmitter and Receiver Specifications

AC electrical specifications are provided for the transmitter and receiver. Long run and short run interfaces at three baud rates are described.

The parameters for the AC electrical specifications are guided by the XAUI electrical interface specified in Clause 47 of IEEE 802.3ae-2002.[1] The goal of this standard is that electrical designs for Level I electrical designs can reuse XAUI, suitably modified for applications at the baud intervals and runs described herein.

Level I Electrical Specification

Level I Transmitter Characteristics

Level I LP-Serial transmitter electrical and timing specifications are stated in the text and tables of this section. The differential return loss, S11, of the transmitter in each case must be better than:

-10 dB for (Baud Frequency) / 10 < Freq(f) < 625 MHz, and

-10 dB + 10log(f/625 MHz) dB for 625 MHz <= Freq(f) <= Baud Frequency

The reference impedance for the differential return loss measurements is 100 Ohm resistive. Differential return loss includes contributions from on-chip circuitry, chip packaging and any off-chip components related to the driver. The output impedance requirement applies to all valid output levels.

The CPS-1432 satisfies the specification requirement that the 20%-80% rise/fall time of the transmitter, as measured at the transmitter output, in each case has a minimum value 60 ps.

Similarly, the timing skew at the output of an LP-Serial transmitter between the two signals that comprise a differential pair does not exceed 25 ps at 1.25 Gbaud, 20 ps at 2.5 Gbaud, and 15 ps at 3.125 Gbaud.

Level I Short Run Transmitter Specifications

Table 15: Level I Short Run Transmitter AC Timing Specifications

Symbol	Characteristics	Reference	Min	Typ	Max	Units
T_Baud	Baud Rate	Section 9.4.1.2	1.25	-	3.125	Gbaud
V_O	Absolute Output Voltage	Section 9.4.1.3	-0.40	-	2.30	Volts
T_Vdiff	Output Differential Voltage (into floating load Rload = 100 Ohm)	Section 9.4.1.3	500	-	1000	mVppd
T_Rd	Differential Resistance	Section 9.4.1.5	80	100	120	ohm
T_tr, T_tf	Recommended output rise and fall times (20% to 80%)	Section 9.4.1.4	60	-	-	ps
T_SDD22	Differential Output Return Loss (T_baud/10 ≤ f < T_baud/2)	Section 9.4.1.6	-	-	-	dB
	Differential Output Return Loss (T_baud/10 ≤ f < T_baud/2)		-	-	-	dB
T_TCC22	Common Mode Return Loss (625 MHz ≤ f ≤ T_baud)	Section 9.4.1.6	-	-	Note 3	dB
T_Ncm	Transmitter Common Mode Noise[1]		-	-	Note 4	mVppd
T_Vcm	Output Common Mode Voltage	Load Type 0[2]	0	-	2.1	V
S_{MO}	Multiple output skew, N ≤ 4	Section 9.4.1.7	-	-	1000	ps
S_{MO}	Multiple output skew, N > 4	Section 9.4.1.7	-	-	2UI + 1000	ps
UI	Unit Interval	-	320	-	800	ps

Notes:

1. For all Load Types: R_Rdin = 100 Ohm +/- 20 Ohm.
2. Load Type 0 with min. T_Vdiff, AC-coupling or floating load.
3. It is suggested that T_SCC22 be -6 dB to be compatible with Level II transmitter requirements.
4. It is suggested that T_Ncm be limited to 5% of T_Vdiff to be compatible with Level II transmitter requirements.

Level I Long Run Transmitter Specifications

Table 16: Level I Long Run Transmitter AC Timing Specifications

Characteristics	Symbol	Reference	Min	Typ	Max	Units
Baud Rate	T_Baud	Section 9.4.2.2	1.25	-	3.125	Gbaud
Absolute Output Voltage	V_O	Section 9.4.2.3	-0.40	-	2.30	Volts
Output Differential Voltage (into floating load Rload = 100 Ohm)	T_Vdiff	Section 9.4.2.3	800	-	1600	mVppd
Differential Resistance	T_Rd	Section 9.4.1.5	80	100	120	ohm
Recommended output rise and fall times (20% to 80%)	T_tr, T_tf	-	60	-	-	ps
Differential Output Return Loss (T_baud/10 ≤ f < T_baud/2)	T_SDD22	Section 9.4.1.6	-	-	-	dB
Differential Output Return Loss (T_baud/10 ≤ f < T_baud/2)			-	-	-	dB
Common Mode Return Loss (625 MHz ≤ f ≤ T_baud)	T_TCC22	Section 9.4.1.6	-	-	Note 3	dB
Transmitter Common Mode Noise[1]	T_Ncm		-	-	Note 4	mVppd
Output Common Mode Voltage	T_Vcm	Load Type 0[2]	0	-	2.1	V
Multiple output skew, N ≤ 4	S_{MO}	-	-	-	1000	ps
Multiple output skew, N > 4	S_{MO}	-	-	-	2UI + 1000	ps
Unit Interval	UI	-	320	-	800	ps

Notes:

1. For all Load Types: R_Rdin = 100 Ohm +/- 20 Ohm.
2. Load Type 0 with min. T_Vdiff, AC-coupling or floating load.
3. It is suggested that T_SCC22 be -6 dB to be compatible with Level II transmitter requirements.
4. It is suggested that T_Ncm be limited to 5% of T_Vdiff to be compatible with Level II transmitter requirements.

For each baud rate at which the LP-Serial transmitter is specified to operate, the output eye pattern of the transmitter falls entirely within the unshaded portion of the Transmitter Output Compliance Mask displayed in Figure 15 when measured at the output pins of the device and the device is driving a 100 Ohm ± 5% differential resistive load. The specification allows the output eye pattern of a LP-Serial transmitter that implements pre-emphasis (to equalize the link and reduce inter-symbol interference) to only comply with the Transmitter Output Compliance Mask when pre-emphasis is disabled or minimized

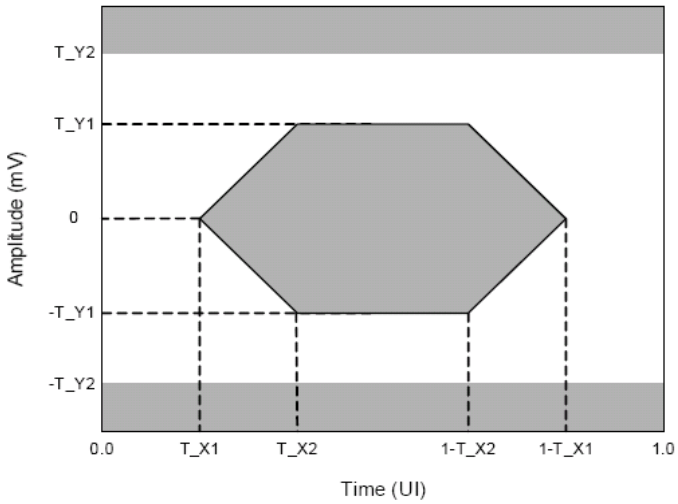

Figure 15: Transition Symbol Transmit Eye Mask

Table 17: Level I Near-End (Tx) Template Intervals

Characteristics	Symbol	Near-End Short Run Value	Near-End Long Run Value	Units
Eye Mask	T_X1	0.17	0.17	UI
Eye Mask	T_X2	0.39	0.39	UI
Eye Mask	T_Y1	250	400	mV
Eye Mask	T_Y2	500	800	mV
Eye Mask	T_Y3	N/A	N/A	mV
Uncorrelated Bounded High Probability Jitter	T_UBHPJ	0.17	0.17	UIpp
Duty Cycle Distortion	T_DCD	0.05	0.05	UIpp
Total Jitter	T_TJ	0.35	0.35	UIpp

Level I Receiver Specifications

Level I LP-Serial receiver electrical and timing specifications are stated in the text and tables of this section.

Table 18: Level I Receiver Electrical Input Specifications

Characteristics	Symbol	Reference	Min	Typ	Max	Units
Rx Baud Rate (1.25 Gbaud)	R_Baud	-	-	1.250	-	Gbaud
Rx Baud Rate (2.5 Gbaud)		-	-	2.500	-	Gbaud
Rx Baud Rate (3.125 Gbaud)		-	-	3.125	-	Gbaud
Absolute Input Voltage	R_Vin	Section 9.4.3.4		-	-	
Input Differential Voltage	R_Vdiff	Section 9.4.3.3	200	-	1600	mVppd
Differential Resistance	R_Rdin	Section 9.4.3.7	80	100	120	ohm
Differential Input Return Loss (100 MHz ≤ f ≤ R_Baud/2)	R_SDD11	Section 9.4.3.7	-	-	-	dB
Differential Input Return Loss (R_Baud/2 ≤ f ≤ R_Baud)			-	-	-	-
Common Mode Input Return Loss (625 MHz ≤ f ≤ T_baud)	R_SCC11	Section 9.4.3.7	-	-	-	dB
Termination Voltage[1,2]	R_Vtt	R_Vtt floating[4]	Not Specified			V
Input Common Mode Voltage[1,2]	R_Vrcm	R_Vtt floating[3,4]	-0.05	-	1.85	V
Wander Divider	n	-	-	10	-	-

Notes:

1. Input common mode voltage for AC-coupled or floating load input with min. T_Vdiff.
2. Receiver is required to implement at least one of the specified nominal R_Vtt values, and usually implements only one of these values. Receiver is only required to meet R_Vrcm parameter values that correspond to R_Vtt values supported.
3. Input common mode voltage for AC-coupled or floating load input with min. T_Vdiff.
4. For floating load, input resistance must be ≥ 1K Ohm.

Table 19: Level I Receiver Input Jitter Tolerance Specifications

Characteristics	Symbol	Reference	Min	Typ	Max	Units
Bit Error Ratio	BER	-	-	-	10^{-12}	-
Bounded High Probability Jitter	R_BHPJ	Section 9.4.3.8	-	-	0.37	UIpp
Sinusoidal Jitter, maximum	R_SJ-max	Section 9.4.3.8	-	-	8.5	UIpp
Sinusoidal Jitter, High Frequency	R_SJ-hf	Section 9.4.3.8	-	-	0.1	UIpp
Total Jitter (Does not include Sinusoidal Jitter)	R_TJ	Section 9.4.3.8	-	-	0.55	UIpp
Total Jitter Tolerance[1]	R_JT	-	-	-	0.65	UIpp
Eye Mask	R_X1	Section 9.4.3.8	-	-	0.275	UI
Eye Mask	R_Y1	Section 9.4.3.8	-	-	100	mV
Eye Mask	R_Y2	Section 9.4.3.8	-	-	800	mV

Notes:

1. Total jitter is composed of three components, deterministic jitter, random jitter and single frequency sinusoidal jitter. The sinusoidal jitter can have any amplitude and frequency in the unshaded region of the following figure. The sinusoidal jitter component is included to ensure margin for the low frequency jitter, wander, noise, crosstalk and other variable system effects.

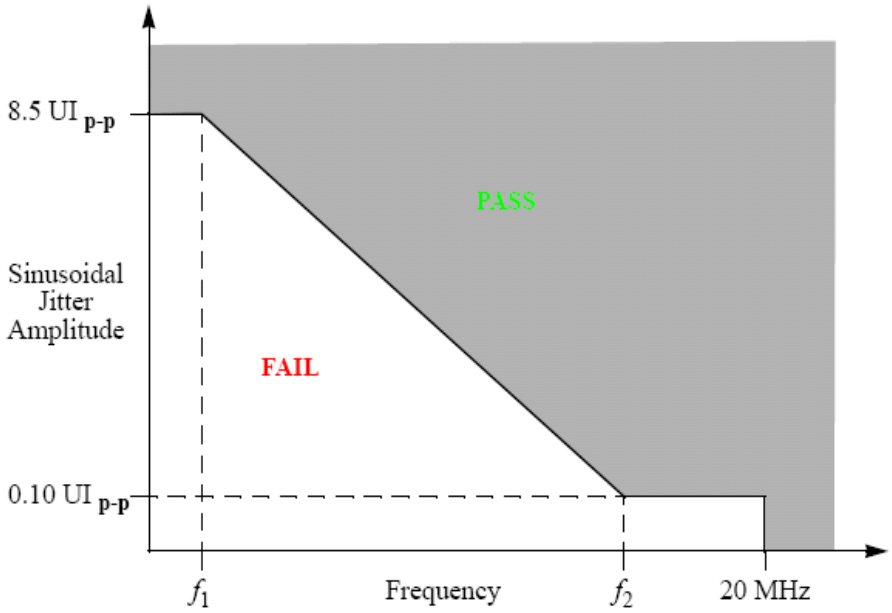

Figure 16: Single Frequency Sinusoidal Jitter Limits

Level I Receiver Eye Diagram

For each baud rate at which the a LP-Serial receiver is specified to operate, the receiver meets the corresponding Bit Error Ratio specification in Table 20 when the eye pattern of the receiver test signal (exclusive of sinusoidal jitter) falls entirely within the unshaded portion of the Receiver Input Compliance Mask displayed in Figure 17. The eye pattern of the receiver test signal is measured at the input pins of the receiving device with the device replaced with a 100 Ohm ± 5% differential resistive load.

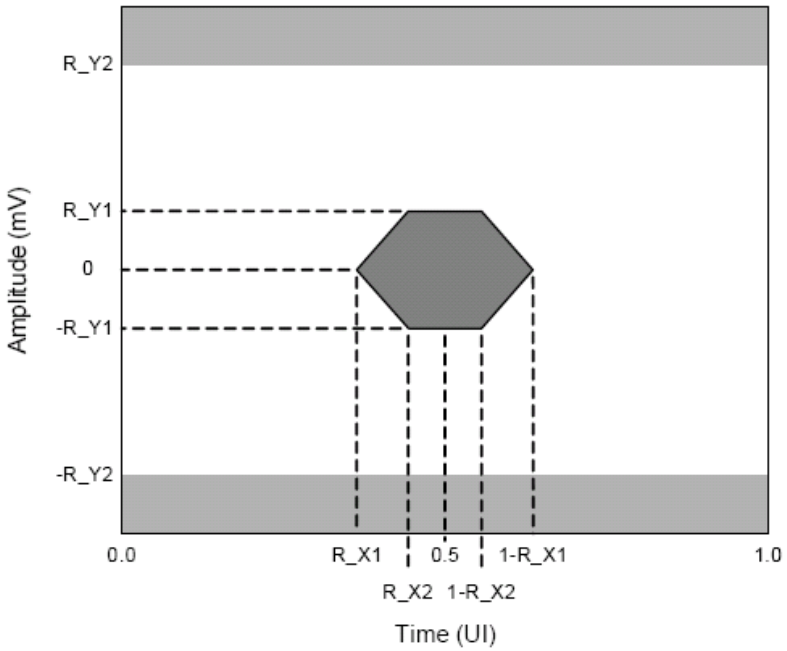

Figure 17: Level I Receiver Input Mask

Table 20: Level I Far-End (Rx) Template Intervals

Characteristics	Symbol	Far-End Value	Units
Eye Mask	R_X1	0.275	UI
Eye Mask	R_X2	0.40	UI
Eye Mask	R_Y1	100	mV
Eye Mask	R_Y2	800	mV
High Probability Jitter	R_HPJ	0.37	UIpp
Total Jitter (Does not include Sinusoidal Jitter)	R_TJ	0.55	UIpp

5 and 6.25 Gbaud LP-Serial Links

This chapter describes the requirements for Level II RapidIO LP-Serial short, medium, and long run electrical interfaces of nominal baud rates of 5.0 and 6.25 Gbaud using NRZ coding (thus, 1 bit per symbol at the electrical level). The electrical interface is based on a high speed low voltage logic with a nominal differential impedance of 100 Ohm. Connections are point-to-point balanced differential pair and signaling is unidirectional.

Explanatory Note on Level I Transmitter and Receiver Specifications

AC electrical specifications are provided for transmitters and receivers. Long run, medium run and short run interfaces at two baud rates are described. The parameters for the AC electrical specifications are guided by the OIF CEI Electrical and Jitter Inter-operability agreement for CEI-6G-SR and CEI-6G-LR.

OIF CEI-6G-SR and CEI-6G-LR have similar application goals to S-RIO, as described in Section 10.1, “Level II Application Goals.” The goal of this standard is that electrical designs for S-RIO can reuse electrical designs for OIF CEI-6G, suitably modified for applications at the baud intervals and runs described herein.

Level II Electrical Specifications

The electrical interface is based on high speed, low voltage logic with nominal differential impedance of 100 Ohm. Connections are point-to-point balanced differential pair and signaling is unidirectional.

Level II Transmitter Characteristics

Level II LP-Serial transmitter electrical and timing specifications are stated in the text and tables of this section.

The differential return loss must be better than A0 from f0 to f1 and better than

A0 + Slope*log10(f/f1)

Where f is the frequency from f1 to f2 (see section 8.5.11, Figure 8-12 of the *RapidIO Specification (Rev. 2.1)*. Differential return loss is measured at compliance points T and R. If AC coupling is used, then all components (internal or external) are to be included in this requirement. The reference impedance for the differential return loss measurements is 100 Ohm.

Common mode return loss measurement must be better than -6dB between a minimum frequency of 100 MHz and a maximum frequency of 0.75 times the baud rate. The reference impedance for the common mode return loss is 25 Ohm.

The CPS-1432 satisfies the specification requirement that the 20%-80% rise/fall time of the transmitter, as measured at the transmitter output, in each case has a minimum value 30 ps.

Similarly, the timing skew at the output of an LP-Serial transmitter between the two signals that comprise a differential pair does not exceed 10 ps at 5.0 and 6.25 Gbaud.

Level II Short Run Transmitter Specifications

Table 21: Level II Short Run Transmitter Output Electrical Specifications

Characteristics	Symbol	Reference	Min	Typ	Max	Units
Baud Rate (5 Gbaud)	T_Baud	Section 10.4.2.1.2	5.00 -0.01%	5.00	5.00 +0.01%	Gbaud
Baud Rate (6.25 Gbaud)			6.25 -0.01%	6.25	6.25 +0.01%	Gbaud
Absolute Output Voltage	V_O	Section 10.4.2.1.3	-0.40	-	2.30	Volts
Output Differential Voltage (into floating load Rload = 100 Ohm)	T_Vdiff	Section 10.4.2.1.3	400	-	750	mVppd
Differential Resistance	T_Rd	Section 10.4.2.1.6	80	100	120	ohm
Recommended output rise and fall times (20% to 80%)	T_tr, T_tf	Section 10.4.2.1.4	30	-	-	ps
Skew between signals comprising a differential pair	T_SKEWdiff	Section 10.4.2.1.5	-	-	15	ps
Differential Output Return Loss (100 MHz to 0.5 *T_Baud)	T_SDD22	Section 10.4.2.1.6	-	-	-8	dB
Differential Output Return Loss (0.5*T_Baud to T_Baud)			-	-	-	dB
Common Mode Return Loss (100 MHz to 0.75 *T_Baud)	T_SCC22	Section 10.4.2.1.6	-	-	-6	dB
Transmitter Common Mode Noise	T_Ncm	-	-	-	5% of T_Vdiff	mVppd
Output Common Mode Voltage	T_Vcm	Load Type 0[1] Section 8.5.3	100	-	1700	mV
		Load Type 1[2,3] Section 8.5.3	630	-	1100	mV

Notes:

1. Load Type 0 with min T_Vdiff, AC-Coupling or floating load.
2. For load Type 1 through 3: R_Zvtt ≤ 30 Ohm; Vtt is defined for each load type as follows: Load Type 1 R_Vtt = 1.2V +5% / - 8%; Load Type 2 R_Vtt = 1.0V +5% / -8%; Load Type 3 R_Vtt = 0.8V +5% / -8%.
3. DC Coupling compliance is optional (Type 1 through 3). Only Transmitters that support DC coupling are required to meet this parameter. It is acceptable for a transmitter to restrict the range of T_Vdiff in order to comply with the specified T_Vcm range. For a transmitter which supports multiple T_Vdiff levels, it is acceptable for a transmitter to claim DC Coupling Compliance if it meets the T_Vcm ranges for at least one of its T_Vdiff setting as long as those setting(s) that are compliant are indicated.

Level II Medium Run Transmitter Specifications

Table 22: Level II Medium Run Transmitter Output Electrical Specifications

Characteristics	Symbol	Reference	Min	Typ	Max	Units
Baud Rate (5 Gbaud)	T_Baud	Section 10.6.2.1.2	5.00 -0.01%	5.00	5.00 +0.01%	Gbaud
Baud Rate (6.25 Gbaud)			6.25 -0.01%	6.25	6.25 +0.01%	Gbaud
Absolute Output Voltage	V_O	Section 10.6.2.1.3	-0.40	-	2.30	Volts
Output Differential Voltage (into floating load Rload = 100 Ohm)	T_Vdiff	Section 10.6.2.1.3[1]	800	-	1200	mVppd
Differential Resistance	T_Rd	Section 10.6.2.1.6	80	100	120	ohm
Recommended output rise and fall times (20% to 80%)	T_tr, T_tf	Section 10.6.2.1.4	30	-	-	ps
Skew between signals comprising a differential pair	T_SKEWdiff	Section 10.6.2.1.5	-	-	15	ps
Differential Output Return Loss (100 MHz to 0.5 *T_Baud)	T_SDD22	Section 10.6.2.1.6	-	-	-8	dB
Differential Output Return Loss (0.5*T_Baud to T_Baud)			-	-	-	dB
Common Mode Return Loss (100 MHz to 0.75 *T_Baud)	T_S11	Section 10.6.2.1.6	-	-	-6	dB
Transmitter Common Mode Noise	T_Ncm	-	-	-	5% of T_Vdiff	mVppd
Output Common Mode Voltage	T_Vcm	Load Type 0[2] Section 8.5.3	100	-	1700	mV
		Load Type 1[3,4] Section 8.5.3	630	-	1100	mV

Notes:

1. The transmitter must be able to produce a minimum T_Vdiff greater than or equal to 800mVppd. In applications where the channel is better than the worst case allowed, a Transmitter device can be provisioned to produce T_Vdiff less than this minimum value, but greater than or equal to 400mVppd, and is still compliant with this specification.
2. Load Type 0 with min T_Vdiff, AC-Coupling or floating load.
3. For load Type 1: R_Zvtt ≤ 30 Ohm; T_Vtt and R_Vtt = 1.2V +5% / - 8%.
4. DC Coupling compliance is optional (Load Type 1). Only Transmitters that support DC coupling are required to meet this parameter.

Level II Long Run Transmitter Specifications

Table 23: Level II Long Run Transmitter Output Electrical Specifications

Characteristics	Symbol	Reference	Min	Typ	Max	Units
Baud Rate (5 Gbaud)	T_Baud	Section 10.5.2.1.2	5.00 -0.01%	5.00	5.00 +0.01%	Gbaud
Baud Rate (6.25 Gbaud)			6.25 -0.01%	6.25	6.25 +0.01%	Gbaud
Absolute Output Voltage	V_O	Section 10.5.2.1.3	-0.40	-	2.30	Volts
Output Differential Voltage (into floating load Rload = 100 Ohm)	T_Vdiff	Section 10.5.2.1.3[1]	800	-	1200	mVppd
Differential Resistance	T_Rd	Section 10.5.2.1.6	80	100	120	ohm
Recommended output rise and fall times (20% to 80%)	T_tr, T_tf	Section 10.5.2.1.4	30	-	-	ps
Skew between signals comprising a differential pair	T_SKEWdiff	Section 10.5.2.1.5	-	-	15	ps
Differential Output Return Loss (100 MHz to 0.5 *T_Baud)	T_SDD22	Section 10.5.2.1.6	-	-	-8	dB
Differential Output Return Loss (0.5*T_Baud to T_Baud)			-	-	-	dB
Common Mode Return Loss (100 MHz to 0.75 *T_Baud)	T_S11	Section 10.5.2.1.6	-	-	-6	dB
Transmitter Common Mode Noise	T_Ncm	-	-	-	5% of T_Vdiff	mVppd
Output Common Mode Voltage	T_Vcm	Load Type 0[2] Section 8.5.3	100	-	1700	mV
		Load Type 1[3,4] Section 8.5.3	630	-	1100	mV

Notes:

1. The transmitter must be able to produce a minimum T_Vdiff greater than or equal to 800mVppd. In applications where the channel is better than the worst case allowed, a Transmitter device can be provisioned to produce T_Vdiff less than this minimum value, but greater than or equal to 400mVppd, and is still compliant with this specification.
2. Load Type 0 with min T_Vdiff, AC-Coupling or floating load.
3. For load Type 1: R_Zvtt ≤ 30 Ohm; T_Vtt and R_Vtt = 1.2V +5% / - 8%.
4. DC Coupling compliance is optional (Load Type 1). Only Transmitters that support DC coupling are required to meet this parameter.

For 5 and 6.25 Gbaud links the Transmitters eye mask will also be evaluated during the steady-state where there are no symbol transitions – for example, a 1 followed by a 1 or a 0 followed by a 0 – and the signal has been de-emphasized. This additional transmitter eye mask constraint is displayed in the following figure

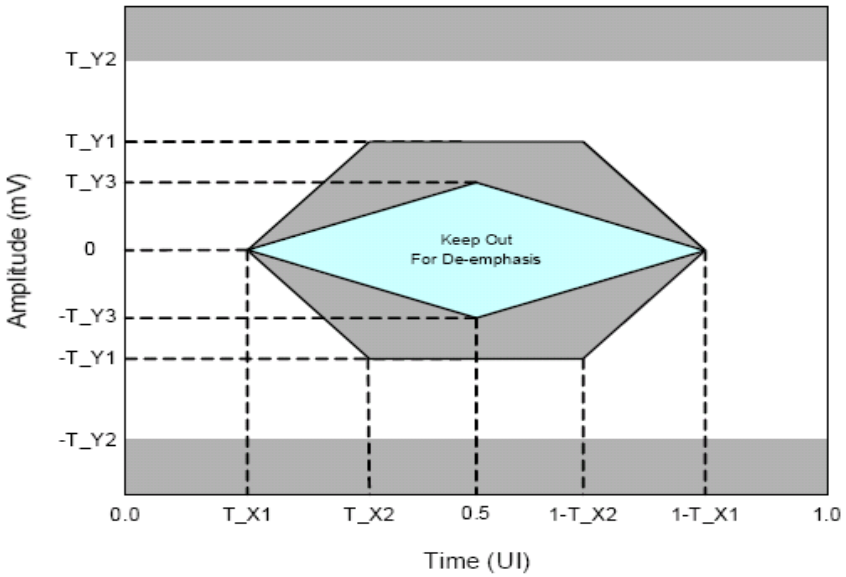

Figure 18: Transition and Steady State Symbol Eye Mask

During the steady-state, the eye mask prevents the transmitter from de-emphasizing the low frequency content of the data too much and limiting the available signal-to-noise at the receiver. The de-emphasis introduces a jitter artifact that is not accounted for in this eye mask. This additional jitter is the result of the finite rise/fall time of the transmitter and the non-uniform voltage swing between the transitions. This additional deterministic jitter must be accounted for as part of the high probability jitter and is specified in the following table.

Table 24: Level II Near-End (Tx) Template Intervals

Characteristics	Symbol	Near-End Short Run Value	Near-End Medium Run/Long Run Value	Comments	Units
Eye Mask	T_X1	0.15	0.15	-	UI
Eye Mask	T_X2	0.40	0.40	-	UI
Eye Mask	T_Y1	200	200	For connection to short run Rx	mV
			400	For connection to long run Rx	
Eye Mask	T_Y2	375	375	For connection to short run Rx	mV
			600	For connection to long run Rx	

Table 24: Level II Near-End (Tx) Template Intervals

Characteristics	Symbol	Near-End Short Run Value	Near-End Medium Run/Long Run Value	Comments	Units
Eye Mask	T_Y3	125	N/A	-	mV
Uncorrelated Bounded High Probability Jitter	T_UBHPJ	0.15	0.15	-	UIpp
Duty Cycle Distortion	T_DCD	0.05	0.05	-	UIpp
Total Jitter	T_TJ	0.30	0.30	-	UIpp

Level II Short Run Receiver Specifications

Table 25: Level II Short Run Receiver Electrical Input Specifications

Characteristics	Symbol	Reference	Min	Typ	Max	Units
Rx Baud Rate (5 Gbaud)	R_Baud	Section 10.4.2.2.1	5.00 -0.01%	5.00	5.00 +0.01%	Gbaud
Rx Baud Rate (6.25 Gbaud)			6.25 -0.01%	6.25	6.25 +0.01%	Gbaud
Absolute Input Voltage	R_Vin	Section 10.4.2.2.3	-	-	-	-
Input Differential Voltage	R_Vdiff	Section 10.4.2.2.3	125	-	1200	mVppd
Differential Resistance	R_Rdin	Section 10.4.2.2.7	80	100	120	ohm
Bias Voltage Source Impedance[1] (load types 1 to 3)	R_Zvtt	-	-	-	30	ohm
Differential Input Return Loss (100 MHz to 0.5*R_Baud)	R_SDD11	Section 10.4.2.2.7	-	-	-8	dB
Differential Input Return Loss (0.5*R_Baud to R_Baud)			-	-	-	-
Common Mode Input Return Loss (100 MHz to 0.5*R_Baud)	R_SCC11	Section 10.4.2.2.7	-	-	-6	dB
Termination Voltage[1,2]	R_Vtt	R_Vtt floating[4]	Not Specified			V
		R_Vtt = 1.2V Nominal	1.2 -8%	-	1.2 +5%	V
		R_Vtt = 1.0V Nominal	1.0 -8%	-	1.0 +5%	V
		R_Vtt = 0.8V Nominal	0.8 -8%	-	0.8 +5%	V
Input Common Mode Voltage[1,2]	R_Vrcm	Load Type 0[2]	0	-	1800	mV
		Load Type 1[1,3]	595	-	R_Vtt - 60	mV
Wander Divider	n	Section 8.4.5, 8.4.6	-	10	-	-

Notes:

1. DC Coupling compliance is optional. For Vcm definition, see Figure 14.
2. Receiver is required to implement at least one of the specified nominal R_Vtt values, and usually implements only one of these values. Receiver is only required to meet R_Vrcm parameter values that correspond to R_Vtt values supported.
3. Input common mode voltage for AC-coupled or floating load input with min. T_Vdiff.
4. For floating load, input resistance must be ≥ 1K Ohm.

Level II Medium Run Receiver Specifications

Table 26: Level II Medium Run Receiver Electrical Input Specifications

Characteristics	Symbol	Reference	Min	Typ	Max	Units
Rx Baud Rate (5 Gbaud)	R_Baud	Section 10.6.2.2.1	5.00 -0.01%	5.00	5.00 +0.01%	Gbaud
Rx Baud Rate (6.25 Gbaud)			6.25 -0.01%	6.25	6.25 +0.01%	Gbaud
Absolute Input Voltage	R_Vin	Section 10.6.2.2.3	-	-	-	-
Input Differential Voltage	R_Vdiff	Section 10.6.2.2.3	-	-	1200	mVppd
Differential Resistance	R_Rdin	Section 10.6.2.2.7	80	100	120	ohm
Bias Voltage Source Impedance (load type 1)[1]	R_Zvtt	-	-	-	30	ohm
Differential Input Return Loss (100MHz to 0.5*R_Baud)	R_SDD11	Section 10.6.2.2.7	-	-	-8	dB
Differential Input Return Loss (0.5*R_Baud to R_Baud)			-	-	-	-
Common Mode Input Return Loss (100MHz to 0.5*R_Baud)	R_SCC11	Section 10.6.2.2.7	-	-	-6	dB
Input Common Mode Voltage[1,2]	R_Vfcm	Load Type 0[2]	0	-	1800	mV
		Load Type 1[1,3]	595	-	R_Vtt - 60	mV
Wander Divider	n	Section 8.4.5, 8.4.6	-	10	-	-

Notes:

1. DC Coupling compliance is optional (Load Type 1). Only receivers that support DC coupling are required to meet this parameter.
2. Load Type 0 with min T_Vdiff, AC-Coupling or floating load. For floating load, input resistance must be ≥ 1K Ohm.
3. For Load Type 1: T_Vtt and R_Vtt = 1.2V +5% / -8%.

Level II Long Run Receiver Specifications

Table 27: Level II Long Run Receiver Electrical Input Specifications

Characteristics	Symbol	Reference	Min	Typ	Max	Units
Rx Baud Rate (5 Gbaud)	R_Baud	Section 10.5.2.2.1	5.00 -0.01%	5.00	5.00 +0.01%	Gbaud
Rx Baud Rate (6.25 Gbaud)			6.25 -0.01%	6.25	6.25 +0.01%	Gbaud
Absolute Input Voltage	R_Vin	Section 10.5.2.2.3	-	-	-	-
Input Differential Voltage	R_Vdiff	Section 10.5.2.2.3	-	-	1200	mVppd
Differential Resistance	R_Rdin	Section 10.5.2.2.7	80	100	120	ohm
Bias Voltage Source Impedance (load type 1)[1]	R_Zvtt	-	-	-	30	ohm
Differential Input Return Loss (100MHz to 0.5*R_Baud)	R_SDD11	Section 10.5.2.2.7	-	-	-8	dB
Differential Input Return Loss (0.5*R_Baud to R_Baud)			-	-	-	-
Common Mode Input Return Loss (100MHz to 0.5*R_Baud)	R_SCC11	Section 10.5.2.2.7	-	-	-6	dB
Input Common Mode Voltage[1,2]	R_Vfcm	Load Type 0[2]	0	-	1800	mV
		Load Type 1[1,3]	595	-	R_Vtt - 60	mV
Wander Divider	n	Section 8.4.5, 8.4.6	-	10	-	-

Notes:

1. DC Coupling compliance is optional (Load Type 1). Only receivers that support DC coupling are required to meet this parameter.
2. Load Type 0 with min T_Vdiff, AC-Coupling or floating load. For floating load, input resistance must be ≥ 1K Ohm.
3. For Load Type 1: T_Vtt and R_Vtt = 1.2V +5% / -8%.

Level II Receiver Eye Diagram

For a Level II link the receiver mask it is defined as displayed in the following figure. Specific parameter values for both masks are called out in the following table

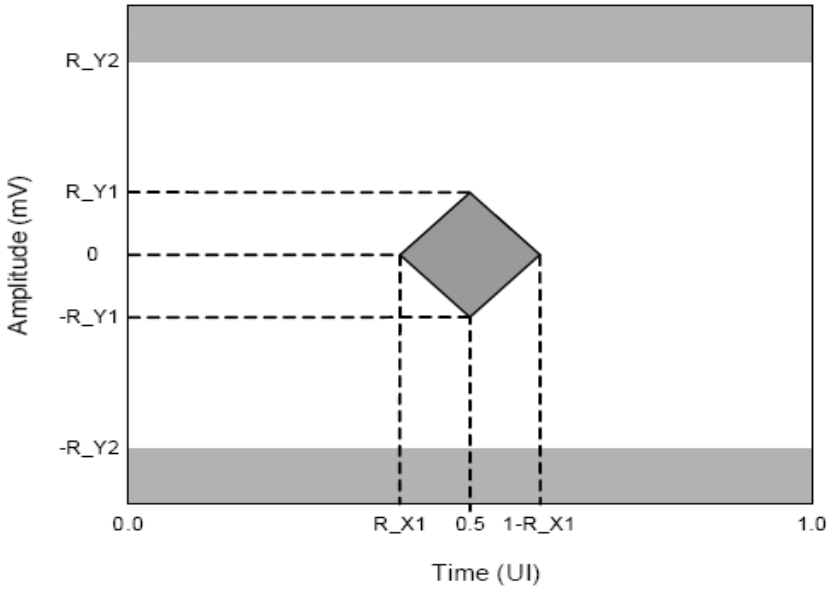

Figure 19: Level II Receiver Input Compliance Mask

Table 28 defines the parameters that will be specified for receivers that have an open eye at the far-end. The termination conditions used to measure the received eye are defined in the above Level II Receiver Specification tables.

Table 28: Level II Short Run Far-End (Rx) Template Intervals

Characteristics	Symbol	Far-End Value	Units
Eye Mask	R_X1	0.30	UI
Eye Mask	R_Y1	62.5	mV
Eye Mask	R_Y2	375	mV
Uncorrelated Bounded High Probability Jitter	R_UBHPJ	0.15	UIpp
Correlated Bounded High Probability Jitter	R_CBHPJ	0.30	UIpp
Total Jitter (Does not include Sinusoidal Jitter)	R_TJ	0.60	UIpp

14. Reference Clock

The differential reference clock (REF_CLK_P//N) generates the S-RIO PHY and internal clocks used in the CPS-1432.

Reference Clock Electrical Specifications

The reference clock is 156.25 MHz, and is AC-coupled with the following electrical specifications.

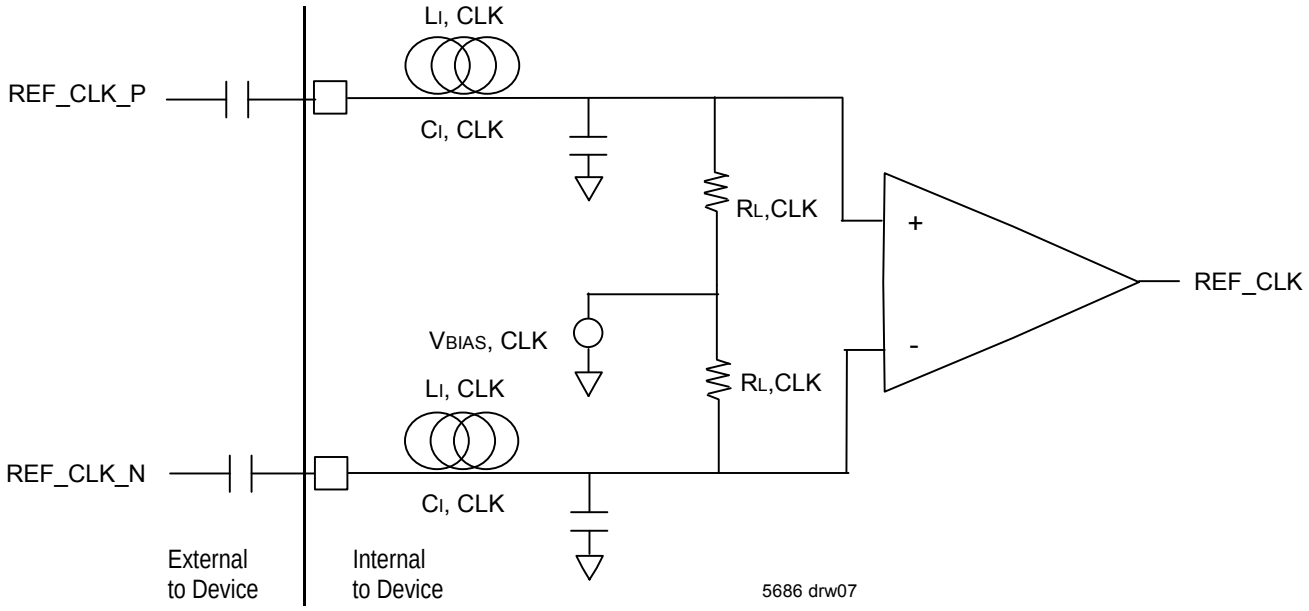

Figure 20: REF_CLK Representative Circuit

The series capacitors are descretes that must be placed external to the device's receivers. All other elements are associated with the input structure internal to the device. V_{BIAS} is generated internally.

Table 29: Input Reference Clock Jitter Specifications

Name	Description	Min	Nom	Max	Units
REF_CLK[1]	REF_CLK clock operating at 156.25 MHz	-100	-	+100	ppm
Phase Jitter (rms)	Phase Jitter (rms) (1–20 MHz)	-	-	1	ps
tDUTY_REF	REF_CLK duty cycle	40	50	60	%
tRCLK/tFCLK	Input signal rise/fall time (20%-80%)	80	500	650	ps
vIN_CML[2]	Differential peak-peak REF_CLK input swing	400	-	2400	mV
RL_CLK	Input termination resistance	40	50	60	ohm
LI_CLK	Input inductance	-	-	4	nH
CI_CLK	Input capacitance	-	-	5	pF

Note:

1. The reference clock accuracy should be ±100 ppm or less (for 156.25 MHz, maximum frequency deviation is ±100 ppm or ±15.625 kHz). This is a *RapidIO Specification (Rev. 2.1)* requirement that outgoing signals from separate links which belong to the same port should not be separated more than ±100 ppm. IDT recommends the following device as a reference clock device: ICS841N254i, ICS844N252i, ICS844N251i-45, ICS8N4Q001i-001, and so on. For additional clock support, contact IDT technical support.
2. The vIN_CML specification is met by a LVDS driver with VOD > 200 mV (see TIA/EIA-644-A).

The CPS-1432 differential input clock requires a current-mode driver such as LVDS or HCSL. AC-coupling is required. For more information, see the following example reference clock interface diagrams.

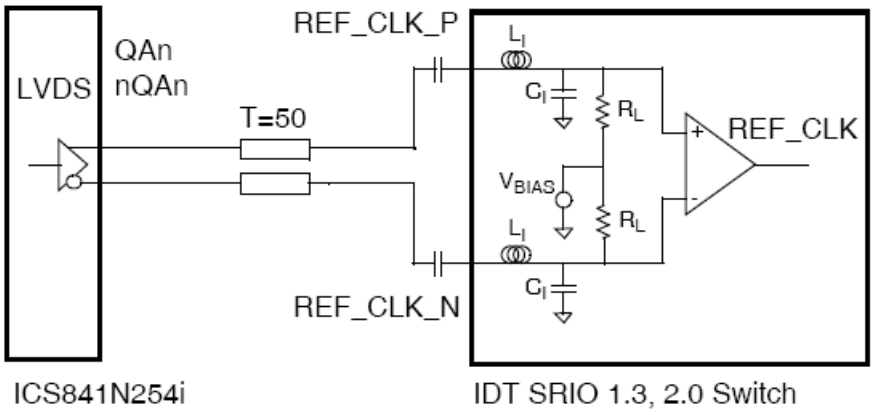

Figure 21: LVDS Reference Clock Input Circuit

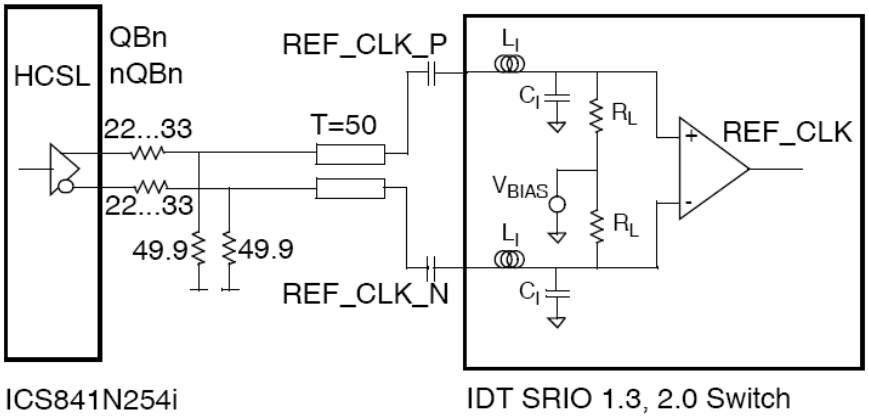

Figure 22: HCSL Reference Clock Input Circuit

15. Reset (RST_N) Specification

To reset CPS-1432, RST_N signal has to be asserted (LOW), and it is de-asserted after 5 REF_CLK cycles. 45us later, the device completes the reset process. Once completed, access to the device from I2C/JTAG is possible and the device is fully functional. Control and data traffic will not be accepted by the device until this process is fully completed.

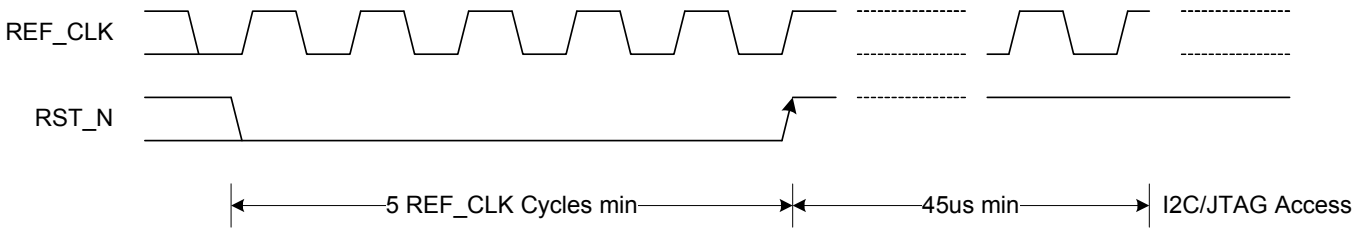

Figure 23: Reset Timing

Note:

1. During the assertion (LOW) of RST_N signal, all ports are disabled and all logic/FSM is at their default state.
2. To access the device through S-RIO maintenance packet, additional time is required for the link to be establish with the link-partner, refer to table below.

Table 30: Reset Specification

Description	Min	Typ	Max	Units	Comments
Soft / Hard Reset to Receipt of I2C/JTAG Access	45	-	100	us	This includes reset time as well as internal PLL lock time.
Soft / Hard Reset to Receipt of S-RIO Maintenance Packet Access	0.5	-	1	ms	This includes reset time as well as link initialization time.

16. JTAG Interface

Description

The CPS-1432 offers full JTAG (Boundary Scan) support for both its slow speed and high speed pins. This allows “pins-down” testing of newly manufactured printed circuit boards as well as troubleshooting of field returns. The JTAG TAP Interface offers another method for Configuration Register Access (CRA) (along with the S-RIO and I^2C ports). Thus, this port can program the CPS-1432’s many registers.

Boundary scan testing of the AC-coupled IOs is performed in accordance with IEEE 1149.6 (AC Extest).

IEEE 1149.1 (JTAG) and IEEE 1149.6 (AC Extest) Compliance

All DC pins are in full compliance with IEEE 1149.1 [10]. All AC-coupled pins fully comply with IEEE 1149.6 [11]. All 1149.1 and 1149.6 boundary scan cells are on the same chain. No additional control cells are provided for independent selection of negative and/or positive terminals of the TX- or RX-pairs.

System Logic TAP Controller Overview

The system logic uses a 16-state, six-bit TAP Controller, a four-bit instruction register, and five dedicated pins to perform a variety of functions. The primary use of the JTAG TAP Controller state machine is to allow the five external JTAG control pins to control and access the CPS-1432's many external signal pins. The JTAG TAP Controller can also be used for identifying the device part number. The JTAG logic of the CPS-1432 is displayed in the following figure.

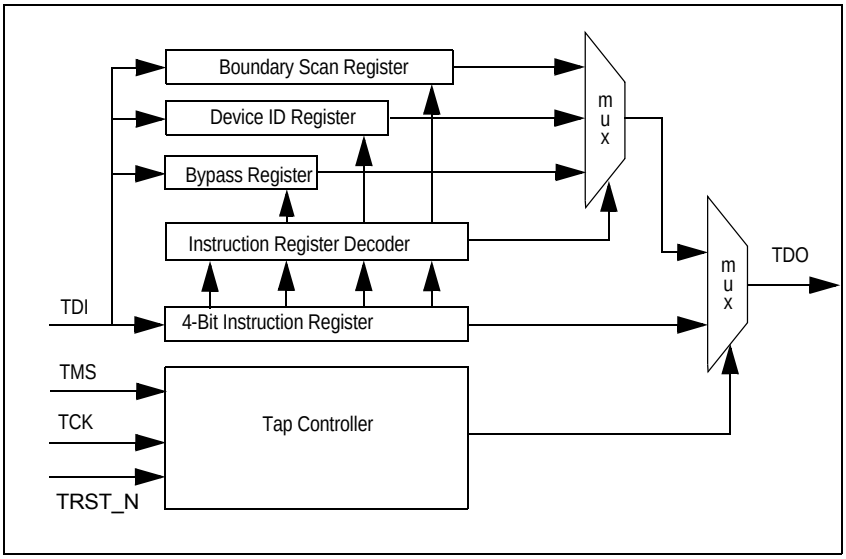

Figure 24: JTAG Logic

Signal Definitions

JTAG operations such as Reset, State-transition control and Clock sampling are handled through the signals listed in Table 31. A functional overview of the TAP Controller and Boundary Scan registers are provided below.

Table 31: JTAG Pin Descriptions

Pin Name	Type	Description
TRST_N[1,2]	Input	JTAG RESET Asynchronous reset for JTAG TAP Controller (internal pull-up[3])
TCK	Input	JTAG Clock. Requires an external pull-up. Test logic clock. JTAG_TMS and JTAG_TDI are sampled on the rising edge. JTAG_TDO is output on the falling edge.
TMS	Input	JTAG Mode Select. Controls the state transitions for the TAP Controller state machine (internal pull-up[3])
TDI	Input	JTAG Input Serial data input for BSC chain, Instruction Register, IDCODE register, and BYPASS register (internal pull-up[3])
TDO	Output	JTAG Output Serial data out. Tri-stated except when shifting while in Shift-DR and SHIFT-IR TAP Controller states.

Note:

1. At power-up, the TRST_N signal must be asserted LOW to bring the TAP Controller up in a known, reset state. As per the IEEE 1149.1 Specification, the user can alternatively hold the TMS pin high while clocking TCK five times (minimum) to reset the controller. To deactivate JTAG, tie TRST_N low so that the TAP Controller remains in a known state at all times. All of the other JTAG input pins are internally biased such that by leaving them unconnected they are automatically disabled. Note that JTAG inputs are OK to float because they have leakers (as required by the IEEE 1149.1 Specification).
2. If a JTAG debug tool is used, combine the RST_N and the TRST signal from a JTAG header with an AND gate and use the output to drive the TRST_N pin. If JTAG is not used, pull TRST_N to GND with a 1K resistor.
3. The internal pull-up resistors values for min., typ., and max. are 29K, 39K and 63K Ohm respectively.

The system logic TAP Controller transitions from state to state, according to the value present on TMS, as sampled on the rising edge of TCK. The Test-Logic Reset state can be reached either by asserting TRST_N or by applying a 1 to TMS for five consecutive cycles of TCK. A state diagram for the TAP Controller appears in Figure 25. The value next to state represent the value that must be applied to TMS on the next rising edge of TCK, to transition in the direction of the associated arrow.

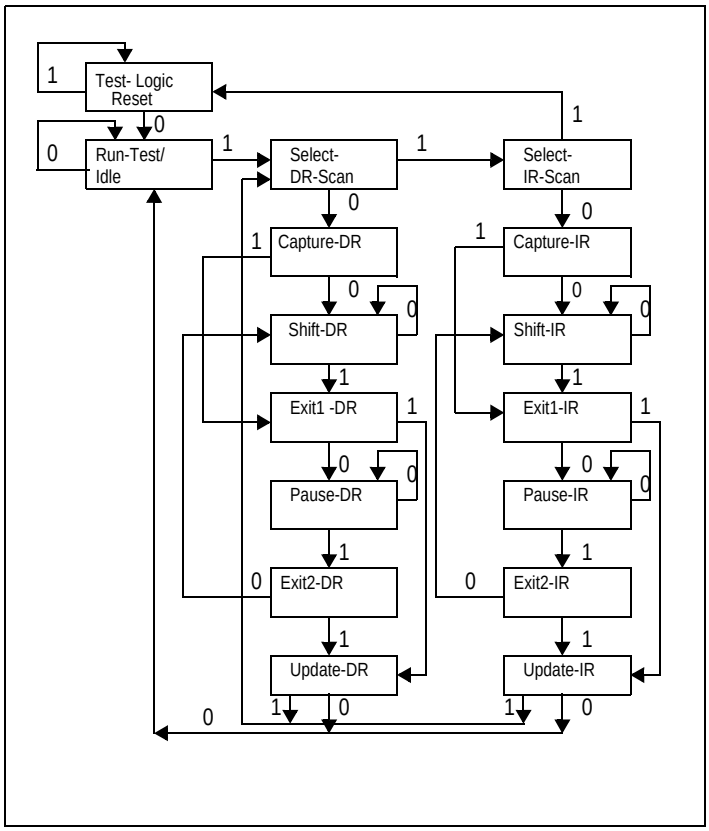

Figure 25: State Diagram of CPS-1432 TAP Controller

Test Data Register (DR)

The Test Data register contains the following:

- The Bypass register
- The Boundary Scan registers
- The Device ID register

These registers are connected in parallel between a common serial input and a common serial data output, and are described in the following sections. For more information, see the *IEEE Standard Test Access port (IEEE Std. 1149.1-1990)*.

Boundary Scan Registers

The CPS-1432 boundary scan chain is 159 bits long. The five JTAG pins do not have scan elements associated with them. Full boundary scan details reside in the associated BSDL file, which can be downloaded from our website at www.IDT.com. The boundary scan chain is connected between TDI and TDO when the EXTEST or SAMPLE/PRELOAD instructions are selected. Once EXTEST is selected and the TAP Controller passes through the UPDATE-IR state, whatever value that is currently held in the boundary scan register's output latches is immediately transferred to the corresponding outputs or output enables.

Therefore, the SAMPLE/PRELOAD instruction must first load suitable values into the boundary scan cells so that inappropriate values are not driven out on the system pins. All of the boundary scan cells feature a negative edge latch, which guarantees that clock skew cannot cause incorrect data to be latched into a cell. The input cells are sample-only cells.

The simplified logic configuration is displayed in the following figure.

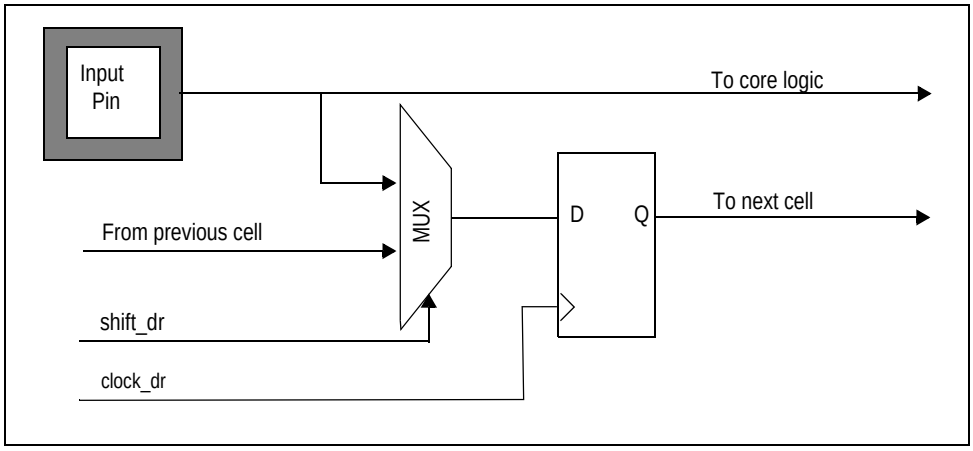

Figure 26: Observe-only Input Cell

The simplified logic configuration of the output cells is displayed in the following figure.

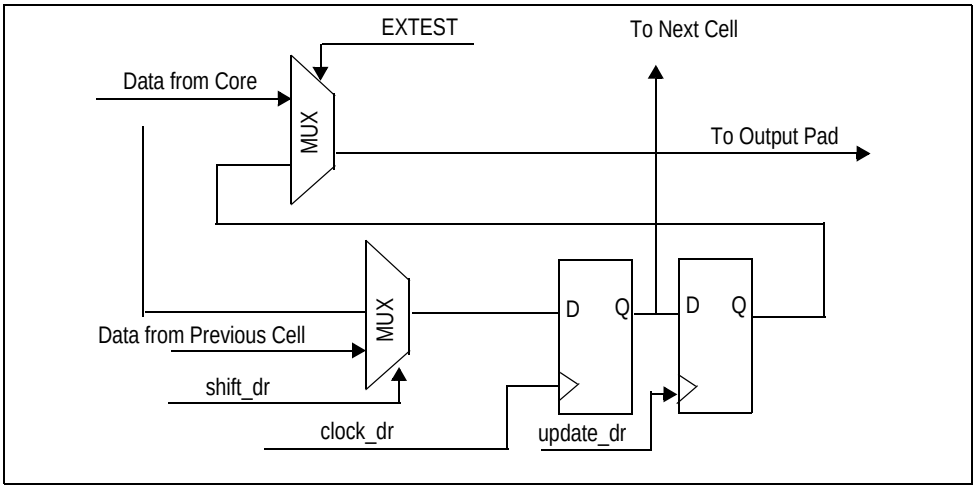

Figure 27: Output Cell

The output enable cells are also output cells. The simplified logic appears in the following figure.

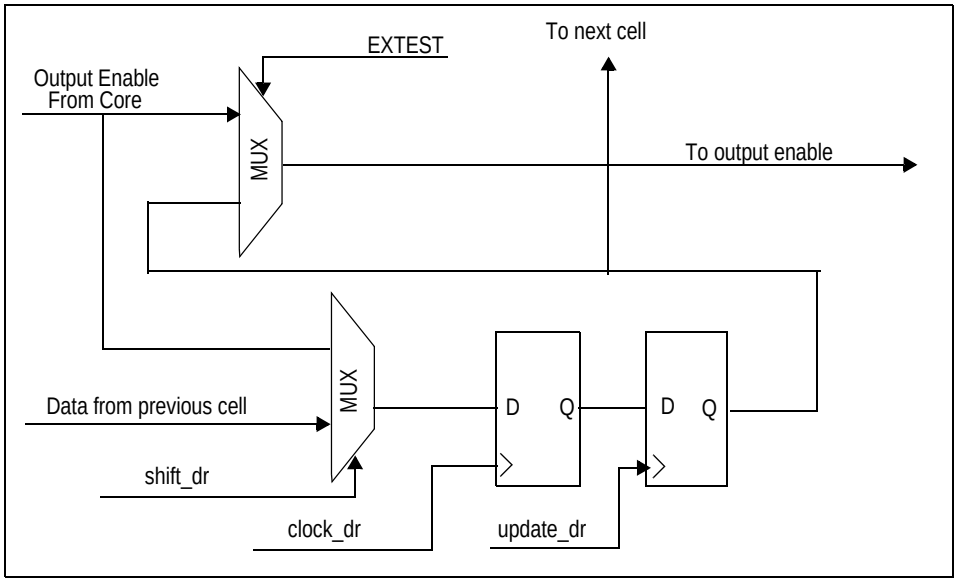

Figure 28: Output Enable Cell

The bidirectional cells are composed of only two boundary scan cells. They contain one output enable cell and one capture cell, which contains only one register. The input to this single register is selected using a mux that is selected by the output enable cell when EXTEST is disabled. When the Output Enable Cell is driving a high out to the pad (which enables the pad for output) and EXTEST is disabled, the Capture Cell will be configured to capture output data from the core to the pad.

However, in the case where the Output Enable Cell is low (signifying a tri-state condition at the pad) or EXTEST is enabled, the Capture Cell will capture input data from the pad to the core. The configuration is displayed graphically in the following figure.

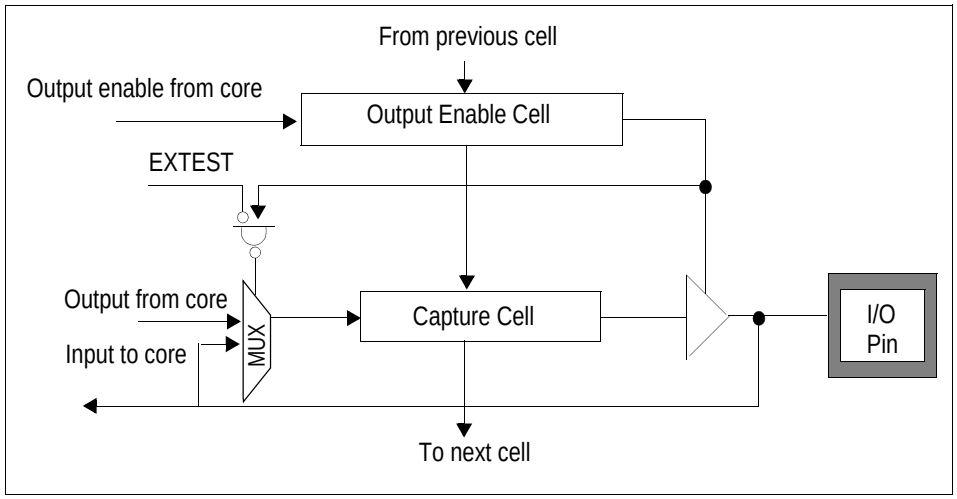

Figure 29: Bidirectional Cell

Instruction Register (IR)

The Instruction register allows an instruction to be shifted serially into the CPS-1432 at the rising edge of TCK. The instruction is then used to select the test to be performed or the test register to be accessed, or both. The instruction shifted into the register is latched at the completion of the shifting process, when the TAP Controller is at the Update-IR state.

The Instruction Register contains four shift-register-based cells that can hold instruction data. This register is decoded to perform the following functions:

- To select test data registers that can operate while the instruction is current. The other test data registers should not interfere with chip operation and selected data registers.
- To define the serial test data register path used to shift data between TDI and TDO during data register scanning.

The Instruction Register consists of four bits to decode instructions, as displayed in the following table.

Table 32: Instructions Supported by CPS-1432 JTAG Boundary Scan

Instruction	Definition	OPcode [3:0]
EXTEST	Mandatory instruction allowing the testing of board level interconnections. Data is typically loaded on the latched parallel outputs of the boundary scan shift register using the SAMPLE/PRELOAD instruction using the EXTEST instruction. EXTEST will then hold these values on the outputs while being executed. Also see the CLAMP instruction for similar capability.	0000
SAMPLE/ PRELOAD	Mandatory instruction that allows data values to be loaded on the latched parallel output of the boundary-scan shift register before selecting the other boundary-scan test instruction. The Sample instruction allows a snapshot of data flowing from the system pins to the on-chip logic or vice versa.	0001
IDCODE	Provided to select Device Identification to read out manufacturer's identity, part, and version number.	0010
HIGHZ	Tri-states all output and bidirectional boundary scan cells.	0011
CLAMP	Provides JTAG user the option to bypass the part's JTAG Controller while keeping the part outputs controlled similar to EXTEST.	0100
EXTEST_PULSE	AC Extest instruction implemented in accordance with the requirements of the IEEE std. 1149.6 specification.	0101
EXTEST_TRAIN	AC Extest instruction implemented in accordance with the requirements of the IEEE std. 1149.6 specification.	0110
RESERVED	Behaviorally equivalent to the BYPASS instruction as per the IEEE std. 1149.1 specification. However, the user is advised to use the BYPASS instruction.	0111–1001
CONFIGURATIO N REGISTER ACCESS (CRA)	CPS-1432-specific opcode to allow reading and writing of the configuration registers. Reads and writes must be 32-bits. For more information, see Configuration Register Access (Revision A/B).	1010
PRIVATE	For internal use only. Do not use.	1011–1100
RESERVED	Behaviorally equivalent to the BYPASS instruction as per the IEEE std. 1149.1 specification. However, the user is advised to use the BYPASS instruction.	1101
PRIVATE	For internal use only. Do not use.	1110
BYPASS	The BYPASS instruction truncates the boundary scan register as a single bit in length.	1111

EXTEST

The external test (EXTEST) instruction controls the boundary scan register, once it has been initialized using the SAMPLE/PRELOAD instruction. Using EXTEST, the user can then sample inputs from or load values on the external pins of the CPS-1432. Once this instruction is selected, the user then uses the SHIFT-DR TAP Controller state to shift values into the boundary scan chain. When the TAP Controller passes through the UPDATE-DR state, these values will be latched on the output pins or into the output enables.

SAMPLE/PRELOAD

The sample/preload instruction has a dual use. The primary use of this instruction is for preloading the boundary scan register before enabling the EXTEST instruction. Failure to preload will result in unknown random data being driven on the output pins when EXTEST is selected. The secondary function of SAMPLE/PRELOAD is for sampling the system state at a specific moment.

BYPASS

The BYPASS instruction truncates the boundary scan register to a single bit in length. During system level use of the JTAG, the boundary scan chains of all the devices on the board are connected in series. In order to facilitate rapid testing of a device, all other devices are put into BYPASS mode. Therefore, instead of having to shift 159 times to get a value through the CPS-1432, the user only needs to shift one time to get the value from TDI to TDO. When the TAP Controller passes through the CAPTURE-DR state, the value in the BYPASS register is updated to be 0.

If the device being used does not have an IDCODE register, then the BYPASS instruction will automatically be selected into the instruction register when the TAP Controller is reset. Therefore, the first value that will be shifted out of a device without an IDCODE register is 0. Devices such as the CPS-1432 that include an IDCODE register will automatically load the IDCODE instruction when the TAP Controller is reset, and they will shift out an initial value of 1. This is done to allow the user to distinguish between devices having IDCODE registers and those that do not.

CLAMP

This instruction, listed as optional in the IEEE 1149.1 JTAG Specifications, allows the boundary scan chain outputs to be clamped to fixed values. When the clamp instruction is issued, the scan chain will bypass the CPS-1432 and pass through to devices further down the scan chain.

IDCODE

The IDCODE instruction is automatically loaded when the TAP Controller state machine is reset either by the use of the TRST_N signal or by the application of a 1 on TMS for five or more cycles of TCK as per the IEEE Std 1149.1 specification. The least significant bit of this value must be 1. Therefore, if a device has a IDCODE register, it will shift out a 1 on the first shift if it is brought directly to the SHIFT-DR TAP Controller state after the TAP Controller is reset. The board- level tester can then examine this bit and determine if the device contains a DEVICE_ID register (the first bit is a 1), or if the device only contains a BYPASS register (the first bit is 0).

However, even if the device contains an IDCODE register, it must also contain a BYPASS register. The only difference is that the BYPASS register will not be the default register selected during the TAP Controller reset. When the IDCODE instruction is active and the TAP Controller is in the Shift-DR state, the 32-bit value that will be shifted out of the deviceID register is 0x00375067 for Revision A or B, 0x20375067 for Revision C.

Table 33: System Controller deviceID Register

Bit(s)	Mnemonic	Description	R/W	Reset
0	reserved	reserved 0x1	R	1
11:1	Manuf_ID	Manufacturer Identity (11 bits) IDT 0x033	R	0x033
27:12	Part_number	Part Number (16 bits) This field identifies the part number of the processor derivative. For the CPS-1432, this value is 0x375.	R	Impl. Dep.
31:28	Version	Version (4 bits) This field identifies the version number of the processor derivative. For the CPS-1432, this value is 0x0 for Revision A or B, 0x2 for Revision C	R	Impl. Dep.

Table 34: CPS-1432 System Controller deviceID Instruction Format for Rev A or B

Version	Part Number	Manufacturer ID	LSB
0000	0000|0011|0111|0101	0000|0110|011	1

Table 35: CPS-1432 System Controller deviceID Instruction Format for Rev C

Version	Part Number	Manufacturer ID	LSB
0010	0000|0011|0111|0101	0000|0110|011	1

EXTEST PULSE

This IEEE 1149.6 instruction applies only to the AC-coupled pins. All DC pins will perform as if the IEEE Std 1149.1 EXTEST instruction is operating whenever the EXTEST_PULSE instruction is effective.

The EXTEST_PULSE instruction enables edge-detecting behavior on signal paths containing AC pins, where test receivers reconstruct the original waveform created by a driver even when signals decay due to AC-coupling.

As the operation name suggests, enabling EXTEST_PULSE causes a pulse to be issued which can be detected even on AC-coupled receivers. For information, see the *IEEE Std 1149.6 Specification*. Below is a short synopsis.

If enabled, the output signal is forced to the value in its associated Boundary-Scan Register data cell for its driver (true and inverted values for a differential pair) at the falling edge of TCK in the Update-IR and Update-DR TAP Controller states. The output subsequently transitions to the opposite of that state (an inverted state) on the first falling edge of TCK that occurs after entering the Run-Test/Idle TAP Controller state. It then transitions back again to the original state (a non-inverted state) on the first falling edge of TCK after leaving the Run-Test/Idle TAP Controller state.

EXTEST TRAIN

This IEEE 1149.6 instruction applies only to the AC-coupled pins. All DC pins will perform as if the IEEE Std 1149.1 EXTEST instruction is operating whenever the EXTEST_PULSE instruction is effective.

The EXTEST_TRAIN instruction enables edge-detecting behavior on signal paths containing AC pins, where test receivers reconstruct the original waveform created by a driver even when signals decay due to AC-coupling.

As the operation name suggests, enabling EXTEST_TRAIN causes a pulse train to be issued which can be detected even on AC-coupled receivers. Once in an enabled state, the train will be sent continuously in response to the TCK clock. No other signaling is required to generate the pulse train while in this state. For information, see the *IEEE Std 1149.6 Specification*. Below is a short synopsis.

First, the output signal is forced to the state matching the value (a non-inverted state) in its associated Boundary-Scan Register data cell for its driver (true and inverted values for a differential pair), at the falling edge of TCK in update-IR. Then the output signal transitions to the opposite state (an inverted state) on the first falling edge of TCK that occurs after entering the Run-Test/Idle TAP Controller state. While remaining in this state, the output signal will continue to invert on every falling edge of TCK, thereby generating a pulse train.

RESERVED

Reserved instructions are not implemented, but default to a BYPASS mode. IDT recommends using the standard BYPASS opcode rather than RESERVED opcodes if BYPASS functionality is desired.

PRIVATE

Private instructions implement various test modes used in the device manufacturing process. The user should not enable these instructions.

Configuration Register Access (Revision A/B)

As previously mentioned, the JTAG port can read and write to the CPS-1432's configuration registers. The same JTAG instruction (4b1010) is used for both writes and reads.

Table 36: JTAG Configuration Register Access

Bits	Field Name	Size	Description
0	jtag_config_wr_n	1	0 = Write configuration register 1 = Read configuration register
22:1	jtag_config_addr	22	Starting address of the memory-mapped configuration register. 22 address bits map to a unique double-word aligned on a 32-bit boundary. This provides accessibility to and is consistent with the S-RIO memory mapping.
54:23	jtag_config_data	32	Reads: Data shifted out (one 32-bit word per read) is read from the configuration register at address jtag_config_addr. Writes: Data shifted in (one 32-bit word per write) is written to the configuration register at address jtag_config_addr.

The CPS-1432's JTAG functionality does not support register access when it is part of a chain of JTAG devices. The CPS-1432 must be the only device on the JTAG bus when its registers are accessed using JTAG. Register access, however, can still be performed from the RapidIO or I2C interfaces.

Writes during Configuration Register Access

A write is performed by shifting the CRA OPcode into the Instruction Register (IR), then shifting in first a read / write select bit, then both the 22-bit target address and 32-bit data into the Data Register (DR). When bit 0 of the data stream is 0, data shifted in after the address will be written to the address specified in jtag_config_addr. The TDO pin will transmit all 0s (for the associated timing diagram, see the following figure).

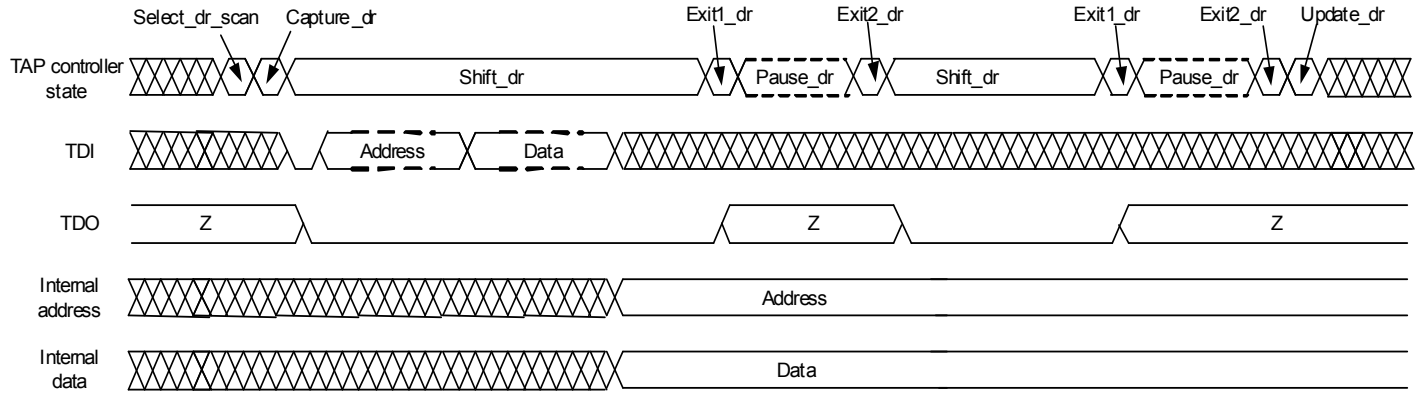

Figure 30: Implementation of Write during Configuration Register Access

Reads during Configuration Register Access

Reads are much like writes except that target data is not provided. When bit 0 of the data stream is 1, data shifted out will be read from the address specified in jtag_config_addr. TDI will not be used after the address is shifted in. As a function of read latency in the architecture, the first 16 bits will be zeros and must be ignored. The following bits will contain the actual register bits.

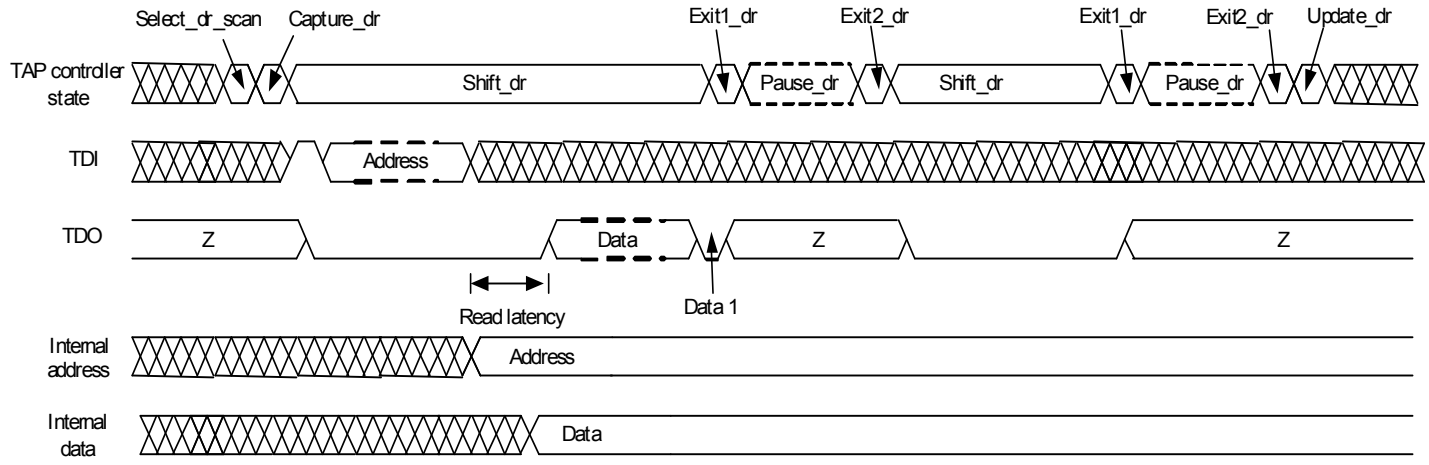

Figure 31: Implementation of Read during Configuration Register Access

Configuration Register Access (Revision C)

The system reset sequence for the CPS-1432 must be completed before a JTAG Configuration Register Access operation is started.

In addition to the S-RIO and I^2C ports, the TAP Controller provides another interface to access any of the CPS-1432's configuration registers. Through the use of the "Configuration Register Access" opcode, writes and reads can be made to any register. The same JTAG command and status instruction is used for both writes and reads of the Configuration Register space (see Table 37).

Table 37: JTAG Configuration Register Access Command and Status Instruction

Bits	Field Name	Size	Description
0	READY	1	This is part of the status of the previous JTAG register access command. The READY bit for the previous command is shifted out on TDO as the next command is shifted in. 0b0 = Previous command did not have time to finish 0b1 = Previous command did have time to finish The agent that applies JTAG register access commands is required to wait a minimum period of time after issuing a command to allow that command to finish (see Table 38). If this minimum delay requirement is violated and command B is applied too soon after command A, command A may not have enough time to finish when its status is shifted out. In this case, the READY bit that is shifted out for command A would be 0 and command B would be ignored by the CPS-1432. The value shifted into the READY bit is ignored by the CPS-1432.
1	ERROR	1	This is part of the status of the previous JTAG register access command. The ERROR bit for the previous command is shifted out on TDO as the next command is shifted in. 0b0 = Previous command finished without an error 0b1 = Previous command finished with an error An error indication on this bit signals that an error occurred on the internal configuration access register infrastructure within the CPS-1432. The nature of the error is not accessible through this interface. Possible error causes include: invalid address, parity error, and timeout. The value shifted into the ERROR bit is ignored by the CPS-1432.
33:2	DATA	32	This is the write data for the current command that is shifted in on TDI. The data for the previous instruction is shifted out on TDO. Note: The data shifted in is not meaningful for Read or NOP commands because these commands do not require input data. If the previous command was a Read, the data shifted out is the read data for that Read. If the previous command was a Write, the data shifted out is the write data for that Write. If the previous command was a NOP, the data shifted out is meaningless.
35:34	CMD	2	0b0x = NOP command. NOP commands allow shifting out of the results of the previous command without starting a new command. 0b10 = Read 0b11 = Write
57:36	ADDR	22	This is the most significant 22 bits of the 24-bit register address offset. S-RIO configuration registers are 4-byte aligned and therefore the lower 2 bits of the offset are always 0.

A 58-bit instruction is shifted in through TDI with bit 0 being applied first and bit 57 applied last. As the new instruction is shifted in through TDI, the previous instruction and its status are shifted out through TDO with bit 0 emerging first and bit 57 emerging last.

Inter-Command Delay

The CPS-1432 JTAG register access mechanism allows only one command to be in progress at a time (see Figure 32). For example, JTAG register access command B cannot be started until JTAG register access command A has completed. To allow sufficient time for command A to finish before starting command B, the agent that applies JTAG register access commands must wait a minimum amount of time between register access commands (see Table 38).

In order to do a JTAG register access operation, the TAP Controller must first be loaded with the Configuration Register Access instruction by shifting 0xA into the Instruction Register (see Table 37).

Once the TAP Controller is in the Configuration Register Access state, commands can be shifted in and their results shifted out as shown in Figure 32. This figure shows the standard JTAG state machine that is implemented in the CPS-1432's TAP Controller. Each inter-state arc is annotated with the TMS input value needed to traverse that arc.

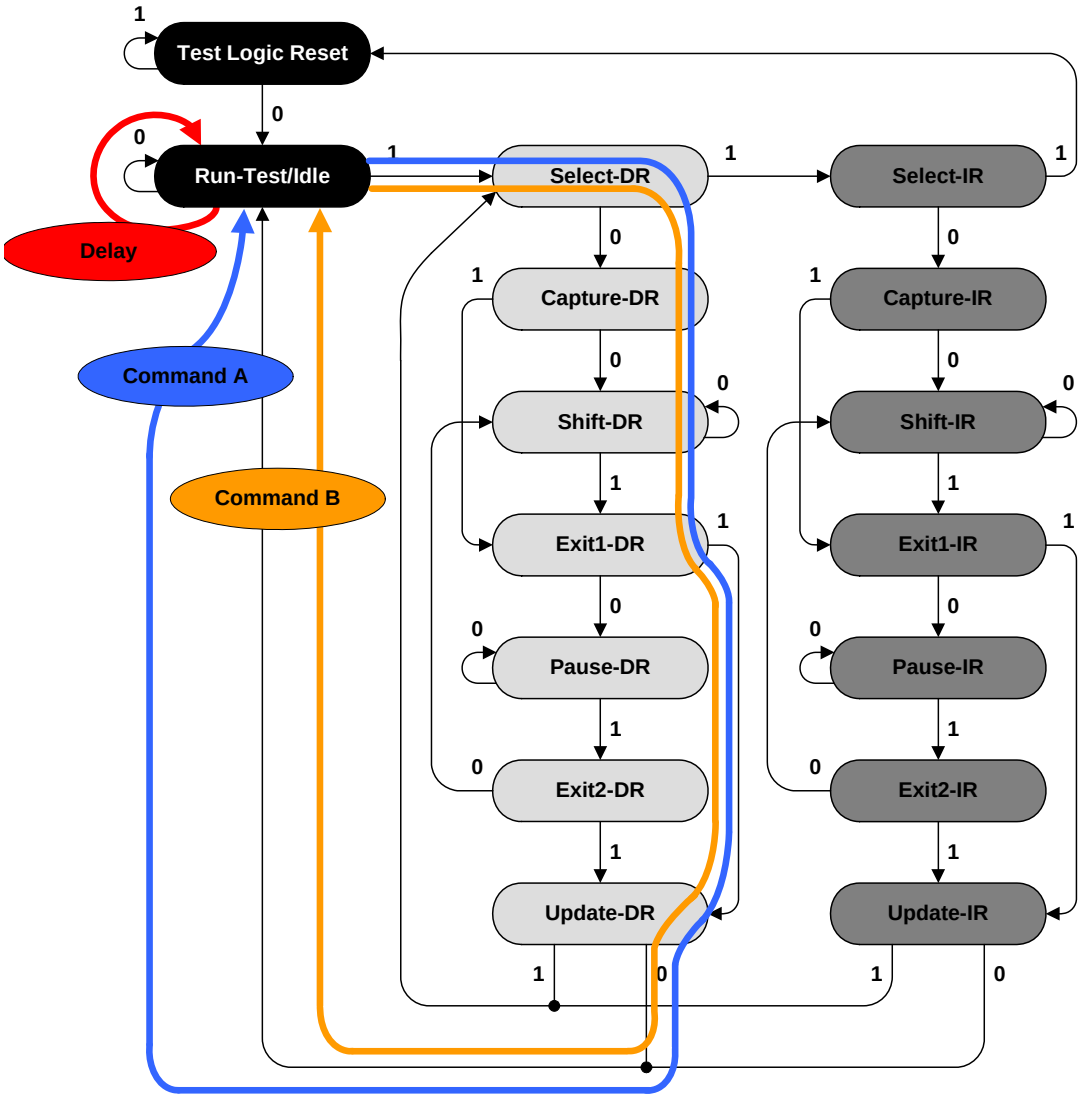

Figure 32: Inter-Command Delay

Superimposed on the state machine are the sequence of states required for register access command A, the inter-command delay, and register access command B. The blue line shows the sequence of states needed to apply command A. The orange line shows the sequence of states needed to apply command B. The red line shows the inter-command delay that must be applied after Command A before command B can be started.

Table 38 summarizes the minimum inter-command delay requirement.

Table 38: Minimum Inter-command Delay

Core Clock Rate (MHz)	Minimum Inter-command Delay in Run-Test/Idle (Microseconds)
312.5	1
156.25	2

Configuration Register Access – Writes

The timing of a typical JTAG register access Write command is shown in Figure 33. Note that the status of the Write command is obtained while shifting in the next command. If the Write is the last functional command, a NOP command can be shifted in while the Write status is shifted out.

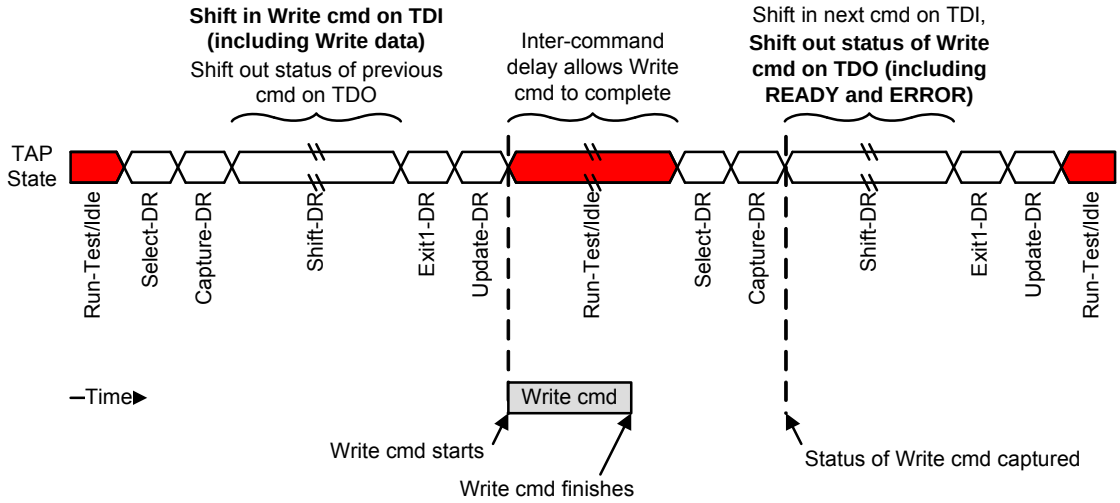

Figure 33: JTAG Register Access – Write Timing Diagram

Configuration Register Access – Reads

The timing of a typical JTAG register access Read command is shown in Figure 34. Note that the status of the Read command, including the read data, is obtained while shifting in the next command. If the Read is the last functional command, a NOP command can be shifted in while the Read status and data are shifted out.

Figure 34: JTAG Register Access – Read Timing Diagram

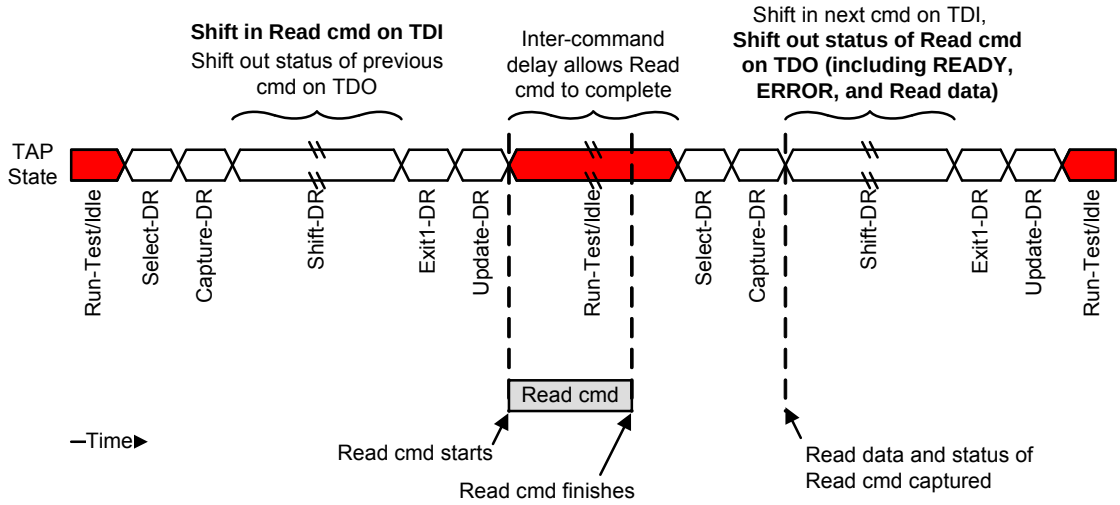

JTAG DC Electrical Specifications

At recommended operating conditions with V_{DD3} = 3.3V ± 5%.

Table 39: JTAG DC Electrical Specifications (V_{DD3} = 3.3V ± 5%)

Parameter	Symbol	Min	Max	Unit
Input high voltage level	V_{IH}	2.0	$V_{DD3(max)}$ + 0.15	V
Input low voltage level	V_{IL}	-0.3	0.8	V
Output high voltage (I_{OH} = -4mA, V_{DD3} = Min.)	V_{OH}	2.4	-	V
Output low voltage (I_{OL} = 4mA, V_{DD3} = Min.)	V_{OL}	-	0.4	V
Input current for JTAG pins (input voltage is between 0.1 x V_{DD3} and 0.9 x V_{DD3} (max))	I_{LI}	-30	30	uA
Capacitance for each Input pin	C_{IN}	-	8	pF
Capacitance for each I/O or Output pin	C_{OUT}	-	10	pF

At recommended operating conditions with V_{DD3} = 2.5V ± 100mV.

Table 40: JTAG DC Electrical Specifications (V_{DD3} = 2.5V ± 100mV)

Parameter	Symbol	Min	Max	Unit
Input high voltage level	V_{IH}	1.7	$V_{DD3(max)}$ + 0.1	V
Input low voltage level	V_{IL}	-0.3	0.7	V
Output high voltage (I_{OH} = -2mA, V_{DD3} = Min.)	V_{OH}	2.0	-	V
Output low voltage (I_{OL} = 2mA, V_{DD3} = Min.)	V_{OL}	-	0.4	V
Input current for JTAG pins (input voltage is between 0.1 x V_{DD3} and 0.9 x V_{DD3} (max))	I_{LI}	-30	30	uA
Capacitance for each Input pin	C_{IN}	-	8	pF
Capacitance for each I/O or Output pin	C_{OUT}	-	10	pF

JTAG AC Electrical Specifications

Table 41: JTAG AC Electrical Specifications

Symbol	Parameter	Min.	Max.	Units
t_{JCYC}	JTAG Clock Input Period	0	10	MHz
t_{JCH}	JTAG Clock HIGH	40	-	ns
t_{JCL}	JTAG Clock LOW	40	-	ns
t_{JR}	JTAG Clock Rise Time	-	3(1)	ns
t_{JF}	JTAG Clock Fall Time	-	3(1)	ns
t_{JRST}	JTAG Reset	50	-	ns
t_{JRSR}	JTAG Reset Recovery	50	-	ns
t_{JCD}	JTAG Data Output	-	25	ns
t_{JDC}	JTAG Data Output Hold	0	-	ns
t_{JS}	JTAG Setup	15	-	ns
t_{JH}	JTAG Hold	15	-	ns

Notes:

1. Guaranteed by design.
2. See AC Test Conditions.

JTAG Timing Waveforms

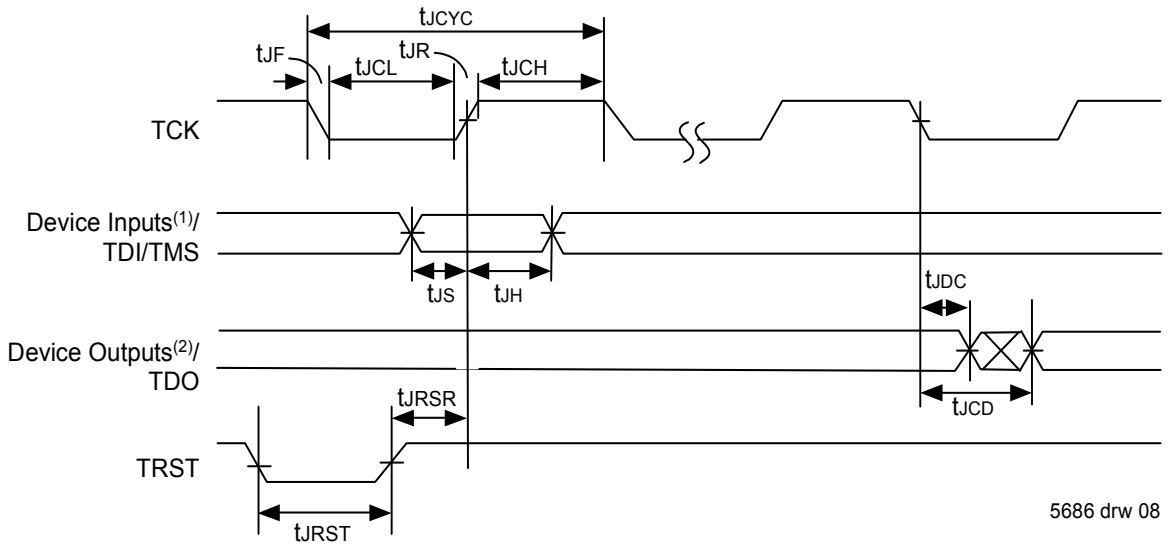

Figure 35: JTAG Timing Specifications

Notes:

1. Device Inputs = All other device input pins.
2. Device Outputs = All other device output pins.

17. Pinout and Pin Listing

Pinout — Top View

index	1	2	3	4	5	6	7	8	9	10	11	12	13	14	15	16	17	18	19	20	21	22	23	24
A	GND	TMS	GND	GND	GND	GNDS	VDDT	TX3_N	TX2_N	VDDT	TX1_N	TX0_N	VDDT	TX31_N	TX30_N	VDDT	TX29_N	TX28_N	VDDT	ID0	SCL	ID4	ID2	GND
B	TDO	TRST_N	GND	GND	GND	GNDS	VDDT	TX3_P	TX2_P	VDDT	TX1_P	TX0_P	VDDT	TX31_P	TX30_P	VDDT	TX29_P	TX28_P	VDDT	SDA	ID5	ID3	ID1	ID8
C	IRQ_N	TDI	GND	GND	GND	GNDS	GNDS	GNDS	GNDS	GNDS	GNDS	GNDS	GNDS	GNDS	GNDS	GNDS	GNDS	GNDS	GNDS	GND	VDD3	VDD3	ID9	ADS
D	TCK	GND	VDD3	VDD3	GNDS	GNDS	VDDS	RX3_N	RX2_N	VDDA	RX1_N	RX0_N	VDDS	RX31_N	RX30_N	VDDA	RX29_N	RX28_N	VDDS	GNDS	GND	VDD3	MM_N	ID7
E	GND	VDD3	VDDS	GNDS	VDDA	VDDA	VDDS	RX3_P	RX2_P	VDDA	RX1_P	RX0_P	VDDS	RX31_P	RX30_P	VDDA	RX29_P	RX28_P	VDDS	GNDS	GNDS	GND	VDD3	ID6
F	VDDT	VDDT	GNDS	VDDS	VDDS	VDDS	GNDS	GNDS	GNDS	VDDA	GNDS	GNDS	VDDS	GNDS	GNDS	VDDA	GNDS	GNDS	VDDS	VDDA	VDDA	GNDS	GND	GND
G	TX16_N	TX16_P	GNDS	RX16_N	RX16_P	GNDS	VDD	GND	GND	GNDS	VDD	GND	GNDS	VDD	VDD	GNDS	GND	VDD	GNDS	VDDS	VDDS	GNDS	VDDT	VDDT
H	TX17_N	TX17_P	GNDS	RX17_N	RX17_P	GNDS	GND	VDD	VDD	GND	GND	VDD	VDD	GND	GND	VDD	VDD	GND	GNDS	RX15_P	RX15_N	GNDS	TX15_P	TX15_N
J	VDDT	VDDT	GNDS	VDDA	VDDA	VDDA	GNDS	VDD	VDD	GND	GND	VDD	VDD	GND	GND	VDD	VDD	GND	GNDS	RX14_P	RX14_N	GNDS	TX14_P	TX14_N
K	TX18_N	TX18_P	GNDS	RX18_N	RX18_P	GNDS	VDD	GND	GND	VDD	VDD	GND	GND	VDD	VDD	GND	GND	GNDS	VDDA	VDDA	VDDA	GNDS	VDDT	VDDT
L	TX19_N	TX19_P	GNDS	RX19_N	RX19_P	GNDS	VDD	GND	GND	VDD	VDD	GND	GND	VDD	VDD	GND	GND	VDD	GNDS	RX13_P	RX13_N	GNDS	TX13_P	TX13_N
M	VDDT	VDDT	GNDS	VDDS	VDDS	VDDS	GNDS	VDD	VDD	GND	GND	VDD	VDD	GND	GND	VDD	VDD	GND	GNDS	RX12_P	RX12_N	GNDS	TX12_P	TX12_N
N	TX4_N	TX4_P	GNDS	RX4_N	RX4_P	GNDS	GND	VDD	VDD	GND	GND	VDD	VDD	GND	GND	VDD	VDD	GNDS	VDDS	VDDS	VDDS	GNDS	VDDT	VDDT
P	TX5_N	TX5_P	GNDS	RX5_N	RX5_P	GNDS	VDD	GND	GND	VDD	VDD	GND	GND	VDD	VDD	GND	GND	VDD	GNDS	RX27_P	RX27_N	GNDS	TX27_P	TX27_N
R	VDDT	VDDT	GNDS	VDDA	VDDA	VDDA	GNDS	GND	GND	VDD	VDD	GND	GND	VDD	VDD	GND	GND	VDD	GNDS	RX26_P	RX26_N	GNDS	TX26_P	TX26_N
T	TX6_N	TX6_P	GNDS	RX6_N	RX6_P	GNDS	GND	VDD	VDD	GND	GND	VDD	VDD	GND	GND	VDD	VDD	GNDS	VDDA	VDDA	VDDA	GNDS	VDDT	VDDT
U	TX7_N	TX7_P	GNDS	RX7_N	RX7_P	GNDS	GND	VDD	VDD	GND	GND	VDD	VDD	GND	GND	VDD	VDD	GND	GNDS	RX25_P	RX25_N	GNDS	TX25_P	TX25_N
V	VDDT	VDDT	GNDS	VDDS	VDDS	GNDS	VDD	GND	GNDS	VDD	VDD	GNDS	GND	VDD	GNDS	GND	GND	VDD	GNDS	RX24_P	RX24_N	GNDS	TX24_P	TX24_N
W	GND	GND	GNDS	VDDA	VDDA	VDDS	GNDS	GNDS	VDDA	GNDS	GNDS	VDDS	GNDS	GNDS	VDDA	GNDS	GNDS	GNDS	VDDS	VDDS	VDDS	GNDS	VDDT	VDDT
Y	FSEL0	FSEL1	GND	GNDS	GNDS	VDDS	RX20_P	RX21_P	VDDA	RX22_P	RX23_P	VDDS	RX8_P	RX9_P	VDDA	RX10_P	RX11_P	VDDS	VDDA	VDD3A	GNDS	VDDS	GNDS	REF_CLK_N
AA	RST_N	QCFG0	VDD3	GND	GNDS	VDDS	RX20_N	RX21_N	VDDA	RX22_N	RX23_N	VDDS	RX8_N	RX9_N	VDDA	RX10_N	RX11_N	VDDS	VDDA	GNDS	REXT_N	DNC	VDDA	REF_CLK_P
AB	QCFG1	QCFG2	VDD3	VDD3	GND	GNDS	GNDS	GNDS	GNDS	GNDS	GNDS	GNDS	GNDS	GNDS	GNDS	GNDS	GNDS	GNDS	GNDS	VDD3	REXT_P	DNC	VDDA	GNDS
AC	QCFG3	QCFG4	QCFG6	DNC	VDD3	VDDT	TX20_P	TX21_P	VDDT	TX22_P	TX23_P	VDDT	TX8_P	TX9_P	VDDT	TX10_P	TX11_P	VDDT	VDD3	VDD3	GND	GND	GND	SPD0
AD	GND	QCFG5	QCFG7	MCAST	DNC	VDDT	TX20_N	TX21_N	VDDT	TX22_N	TX23_N	VDDT	TX8_N	TX9_N	VDDT	TX10_N	TX11_N	VDDT	VDD3	VDD3	VDD3	SPD2	SPD1	GND

Figure 36: Pinout

Pin Listing

Table 42: Pin List (Alphabetical)

Pin Number	Pin Name	Function	Supply / Interface	Pin Function Description
Note: Statically biased pins should be fixed to a voltage level and not be changed after reset de-assertion.				
C24	ADS	I^2C	(V_{DD3}, GND) / CMOS Input	I^2C address width select. Set ADS = GND for 7-bit CPS-1432 slave address. ADS = V_{DD3} for 10-bit.
AA22, AB22, AC4, AD5			DNC	DO NOT CONNECT. These pins should be left FLOATING. They should not be connected to any other signals or power rails.
Y2, Y1	FSEL1, FSEL0	Frequency Select	(V_{DD3}, GND) / CMOS Input	FSEL1: Input reference clock frequency selector: 0 = Not supported. 1 = 156.25 MHz (Default value; required for 6.25 Gbaud line rates) FSEL0: Internal core clock frequency selector: 0 = 156.25 MHz (All speeds up to 3.125 Gbaud with Idle2; all speed up to 2.5 Gbaud with Idle1) 1 = 312.5 MHz (Default value; All speeds including 6.25 Gbaud) These pins have an internal pull-up. These pins must remain STATICALLY BIASED after reset.
A1, A3, A4, A5, A24, B3, B4, B5, C3, C4, C5, C20, D2, D21, E1, E22, F23, F24, G8, G9, G12, G17, H7, H10, H11, H14, H15, H18, J10, J11, J14, J15, J18, K8, K9, K12, K13, K16, K17, L8, L9, L12, L13, L16, L17, M10, M11, M14, M15, M18, N7, N10, N11, N14, N15, P8, P9, P12, P13, P16, P17, R8, R9, R12, R13, R16, R17, T7, T10, T11, T14, T15, U7, U10, U11, U14, U15, U18, V8, V13, V16, V17, W1, W2, Y3, AA4, AB5, AC21, AC22, AC23, AD1, AD24			GND Digital Ground (CMOS)	Digital ground. All pins must be tied to single potential power supply ground plane. Note: IDT recommends both GND and GNDS pins be connected to the common ground plane.
A6, B6, C6, C7, C8, C9, C10, C11, C12, C13, C14, C15, C16, C17, C18, C19, D5, D6, D20, E4, E20, E21, F3, F7, F8, F9, F11, F12, F14, F15, F17, F18, F22, G3, G6, G10, G13, G16, G19, G22, H3, H6, H19, H22, J3, J7, J19, J22, K3, K6, K18, K22, L3, L6, L19, L22, M3, M7, M19, M22, N3, N6, N18, N22, P3, P6, P19, P22, R3, R7, R19, R22, T3, T6, T18, T22, U3, U6, U19, U22, V3, V6, V9, V12, V15, V19, V22, W3, W7, W8, W10, W11, W13, W14, W16, W17, W18, W22, Y4, Y5, Y21, Y23, AA5, AA20, AB6, AB7, AB8, AB9, AB10, AB11, AB12, AB13, AB14, AB15, AB16, AB17, AB18, AB19, AB24,			GNDS Analog Ground (CMOS)	Analog ground. All pins must be tied to single potential ground supply plane. Note: IDT recommends both GND and GNDS pins be connected to the common ground plane.

Table 42: Pin List (Alphabetical)

Pin Number	Pin Name	Function	Supply / Interface	Pin Function Description
C23, B24 D24, E24 B21, A22 B22, A23 B23, A20	ID[9:0]	I^2C	(V_{DD3}, GND) / CMOS Input	I^2C Slave ID addresses. These pins must remain STATICALLY BIASED after reset.
C1	IRQ_N	Interrupt	(V_{DD3}, GND) / CMOS Open Drain Output	The interrupt output pin whose value is provided by the Error Management Block. Note: This is an open-drain output and requires an external pull-up resistor.
AD4	MCAST	Multicast	(V_{DD3}, GND) / CMOS Input	This rising edge triggered pin can generate a Multicast Control Symbol to all Multicast Event participant egress ports.
D23	MM_N	I^2C	(V_{DD3}, GND) / CMOS Input	Select the I^2C Master or Slave mode. Logic low for Master mode. This pin has an internal pull-up for a default configuration of slave mode. This pin must remain STATICALLY BIASED after reset.
AD3, AC3	QCFG[7:6]	Quadrant Config	(V_{DD3}, GND) / CMOS Input	S-RIO Quadrant Configuration pins. The RESET setting can be overridden by subsequent programming of the Quadrant Configuration Register. For more information, see Quadrant Configuration Pins QCFG[7:0]. These pins have an internal pull-up for a default configuration for all ports. It is required to use an external pull-down resistor when configuring to settings other than default. These pins must remain STATICALLY BIASED after reset.
AD2, AC2	QCFG[5:4]			
AC1, AB2	QCFG[3:2]			
AB1, AA2	QCFG[1:0]			
AA24, Y24	REF_CLK_P, REF_CLK_N	SerDes Clock	(V_{DDA}, GND) / Differential Input	This clock is used as the 156.25 MHz reference for standard SerDes operation.
AB21, AA21	REXT_P, REXT_N	Rext	(V_{DDS}, GNDS)	External bias resistor. REXT_N must be connected to REXT_P with a 9.1k Ohm +/- 1% resistor. This establishes the drive bias on the SerDes output. This provides CML driver stability across process and temperature.
AA1	RST_N	Reset	(V_{DD3}, GND) / CMOS Input	Global Reset. Sets all internal registers to default values. Resets all PLLs. Resets all port configurations. This is a HARD Reset.
E12, D12	RX0_P, RX0_N	S-RIO Receive	(V_{DDS}, GNDS) / RIO Differential Input	Differential receiver inputs, Lane 0
E11, D11	RX1_P, RX1_N	S-RIO Receive	(V_{DDS}, GNDS) / RIO Differential Input	Differential receiver inputs, Lane 1

Table 42: Pin List (Alphabetical)

Pin Number	Pin Name	Function	Supply / Interface	Pin Function Description
E9, D9	RX2_P, RX2_N	S-RIO Receive	(V_{DDS}, GNDS) / RIO Differential Input	Differential receiver inputs, Lane 2
E8, D8	RX3_P, RX3_N	S-RIO Receive	(V_{DDS}, GNDS) / RIO Differential Input	Differential receiver inputs, Lane 3
N5, N4	RX4_P, RX4_N	S-RIO Receive	(V_{DDS}, GNDS) / RIO Differential Input	Differential receiver inputs, Lane 4
P5, P4	RX5_P, RX5_N	S-RIO Receive	(V_{DDS}, GNDS) / RIO Differential Input	Differential receiver inputs, Lane 5
T5, T4	RX6_P, RX6_N	S-RIO Receive	(V_{DDS}, GNDS) / RIO Differential Input	Differential receiver inputs, Lane 6
U5, U4	RX7_P, RX7_N	S-RIO Receive	(V_{DDS}, GNDS) / RIO Differential Input	Differential receiver inputs, Lane 7
Y13, AA13	RX8_P, RX8_N	S-RIO Receive	(V_{DDS}, GNDS) / RIO Differential Input	Differential receiver inputs, Lane 8
Y14, AA14	RX9_P, RX9_N	S-RIO Receive	(V_{DDS}, GNDS) / RIO Differential Input	Differential receiver inputs, Lane 9
Y16, AA16	RX10_P, RX10_N	S-RIO Receive	(V_{DDS}, GNDS) / RIO Differential Input	Differential receiver inputs, Lane 10
Y17, AA17	RX11_P, RX11_N	S-RIO Receive	(V_{DDS}, GNDS) / RIO Differential Input	Differential receiver inputs, Lane 11
M20, M21	RX12_P, RX12_N	S-RIO Receive	(V_{DDS}, GNDS) / RIO Differential Input	Differential receiver inputs, Lane 12
L20, L21	RX13_P, RX13_N	S-RIO Receive	(V_{DDS}, GNDS) / RIO Differential Input	Differential receiver inputs, Lane 13
J20, J21	RX14_P, RX14_N	S-RIO Receive	(V_{DDS}, GNDS) / RIO Differential Input	Differential receiver inputs, Lane 14
H20, H21	RX15_P, RX15_N	S-RIO Receive	(V_{DDS}, GNDS) / RIO Differential Input	Differential receiver inputs, Lane 15
G5, G4	RX16_P, RX16_N	S-RIO Receive	(V_{DDS}, GNDS) / RIO Differential Input	Differential receiver inputs, Lane 16
H5, H4	RX17_P, RX17_N	S-RIO Receive	(V_{DDS}, GNDS) / RIO Differential Input	Differential receiver inputs, Lane 17
K5, K4	RX18_P, RX18_N	S-RIO Receive	(V_{DDS}, GNDS) / RIO Differential Input	Differential receiver inputs, Lane 18
L5, L4	RX19_P, RX19_N	S-RIO Receive	(V_{DDS}, GNDS) / RIO Differential Input	Differential receiver inputs, Lane 19
Y7, AA7	RX20_P, RX20_N	S-RIO Receive	(V_{DDS}, GNDS) / RIO Differential Input	Differential receiver inputs, Lane 20

Table 42: Pin List (Alphabetical)

Pin Number	Pin Name	Function	Supply / Interface	Pin Function Description
Y8, AA8	RX21_P, RX21_N	S-RIO Receive	(V_{DDS}, GNDS) / RIO Differential Input	Differential receiver inputs, Lane 21
Y10, AA10	RX22_P, RX22_N	S-RIO Receive	(V_{DDS}, GNDS) / RIO Differential Input	Differential receiver inputs, Lane 22
Y11, AA11	RX23_P, RX23_N	S-RIO Receive	(V_{DDS}, GNDS) / RIO Differential Input	Differential receiver inputs, Lane 23
V20, V21	RX24_P, RX24_N	S-RIO Receive	(V_{DDS}, GNDS) / RIO Differential Input	Differential receiver inputs, Lane 24
U20, U21	RX25_P, RX25_N	S-RIO Receive	(V_{DDS}, GNDS) / RIO Differential Input	Differential receiver inputs, Lane 25
R20, R21	RX26_P, RX26_N	S-RIO Receive	(V_{DDS}, GNDS) / RIO Differential Input	Differential receiver inputs, Lane 26
P20, P21	RX27_P, RX27_N	S-RIO Receive	(V_{DDS}, GNDS) / RIO Differential Input	Differential receiver inputs, Lane 27
E18, D18	RX28_P, RX28_N	S-RIO Receive	(V_{DDS}, GNDS) / RIO Differential Input	Differential receiver inputs, Lane 28
E17, D17	RX29_P, RX29_N	S-RIO Receive	(V_{DDS}, GNDS) / RIO Differential Input	Differential receiver inputs, Lane 29
E15, D15	RX30_P, RX30_N	S-RIO Receive	(V_{DDS}, GNDS) / RIO Differential Input	Differential receiver inputs, Lane 30
E14, D14	RX31_P, RX31_N	S-RIO Receive	(V_{DDS}, GNDS) / RIO Differential Input	Differential receiver inputs, Lane 31
A21	SCL	I^2C	(V_{DD3}, GND) /CMOS Input	I^2C Clock
B20	SDA	I^2C	(V_{DD3}, GND) / CMOS IO	I^2C Serial Data IO. Data direction is determined by the I^2C Read/ Write bit. For more information, see I^2C Bus.
AD22, AD23, AC24	SPD[2:0]	SPEED	(V_{DD3}, GND) / CMOS Input	Speed Select Pins. These pins define S-RIO port speed at RESET for all ports. For more information, see Speed Select Pins SPD[2:0]. SPD[2:0] = 000 = 1.25 Gbaud 001 = 2.5 Gbaud 01X = 5.0 Gbaud 100 = Reserved 101 = 3.125 Gbaud 11X = 6.25 Gbaud These pins must remain STATICALLY BIASED after reset.

Table 42: Pin List (Alphabetical)

Pin Number	Pin Name	Function	Supply / Interface	Pin Function Description
D1	TCK	JTAG	(V_{DD3}, GND) / CMOS Input	JTAG Tap Port Clock
C2	TDI	JTAG	(V_{DD3}, GND) / CMOS Input	JTAG Tap Port Input This pin has an internal pull-up.
B1	TDO	JTAG	(V_{DD3}, GND) / CMOS output	JTAG Tap Port Output
A2	TMS	JTAG	(V_{DD3}, GND) / CMOS Input	JTAG Tap Port Mode Select This pin has an internal pull-up.
B2	TRST_N	JTAG	(V_{DD3}, GND) / CMOS Input	JTAG Tap Port Asynchronous Reset This pin has an internal pull-up.
B12, A12	TX0_P, TX0_N	S-RIO Transmit	(V_{DDT}, GNDS) / RIO Differential Output	Differential transmitter outputs, Lane 0
B11, A11	TX1_P, TX1_N	S-RIO Transmit	(V_{DDT}, GNDS) / RIO Differential Output	Differential transmitter outputs, Lane 1
B9, A9	TX2_P, TX2_N	S-RIO Transmit	(V_{DDT}, GNDS) / RIO Differential Output	Differential transmitter outputs, Lane 2
B8, A8	TX3_P, TX3_N	S-RIO Transmit	(V_{DDT}, GNDS) / RIO Differential Output	Differential transmitter outputs, Lane 3
N2, N1	TX4_P, TX4_N	S-RIO Transmit	(V_{DDT}, GNDS) / RIO Differential Output	Differential transmitter outputs, Lane 4
P2, P1	TX5_P, TX5_N	S-RIO Transmit	(V_{DDT}, GNDS) / RIO Differential Output	Differential transmitter outputs, Lane 5
T2, T1	TX6_P, TX6_N	S-RIO Transmit	(V_{DDT}, GNDS) / RIO Differential Output	Differential transmitter outputs, Lane 6
U2, U1	TX7_P, TX7_N	S-RIO Transmit	(V_{DDT}, GNDS) / RIO Differential Output	Differential transmitter outputs, Lane 7
AC13, AD13	TX8_P, TX8_N	S-RIO Transmit	(V_{DDT}, GNDS) / RIO Differential Output	Differential transmitter outputs, Lane 8
AC14, AD14	TX9_P, TX9_N	S-RIO Transmit	(V_{DDT}, GNDS) / RIO Differential Output	Differential transmitter outputs, Lane 9
AC16, AD16	TX10_P, TX10_N	S-RIO Transmit	(V_{DDT}, GNDS) / RIO Differential Output	Differential transmitter outputs, Lane 10
AC17, AD17	TX11_P, TX11_N	S-RIO Transmit	(V_{DDT}, GNDS) / RIO Differential Output	Differential transmitter outputs, Lane 11

Table 42: Pin List (Alphabetical)

Pin Number	Pin Name	Function	Supply / Interface	Pin Function Description
M23, M24	TX12_P, TX12_N	S-RIO Transmit	(V_{DDT}, GNDS) / RIO Differential Output	Differential transmitter outputs, Lane 12
L23, L24	TX13_P, TX13_N	S-RIO Transmit	(V_{DDT}, GNDS) / RIO Differential Output	Differential transmitter outputs, Lane 13
J23, J24	TX14_P, TX14_N	S-RIO Transmit	(V_{DDT}, GNDS) / RIO Differential Output	Differential transmitter outputs, Lane 14
H23, H24	TX15_P, TX15_N	S-RIO Transmit	(V_{DDT}, GNDS) / RIO Differential Output	Differential transmitter outputs, Lane 15
G2, G1	TX16_P, TX16_N	S-RIO Transmit	(V_{DDT}, GNDS) / RIO Differential Output	Differential transmitter outputs, Lane 16
H2, H1	TX17_P, TX17_N	S-RIO Transmit	(V_{DDT}, GNDS) / RIO Differential Output	Differential transmitter outputs, Lane 17
K2, K1	TX18_P, TX18_N	S-RIO Transmit	(V_{DDT}, GNDS) / RIO Differential Output	Differential transmitter outputs, Lane 18
L2, L1	TX19_P, TX19_N	S-RIO Transmit	(V_{DDT}, GNDS) / RIO Differential Output	Differential transmitter outputs, Lane 19
AC7, AD7	TX20_P, TX20_N	S-RIO Transmit	(V_{DDT}, GNDS) / RIO Differential Output	Differential transmitter outputs, Lane 20
AC8, AD8	TX21_P, TX21_N	S-RIO Transmit	(V_{DDT}, GNDS) / RIO Differential Output	Differential transmitter outputs, Lane 21
AC10, AD10	TX22_P, TX22_N	S-RIO Transmit	(V_{DDT}, GNDS) / RIO Differential Output	Differential transmitter outputs, Lane 22
AC11, AD11	TX23_P, TX23_N	S-RIO Transmit	(V_{DDT}, GNDS) / RIO Differential Output	Differential transmitter outputs, Lane 23
V23, V24	TX24_P, TX24_N	S-RIO Transmit	(V_{DDT}, GNDS) / RIO Differential Output	Differential transmitter outputs, Lane 24
U23, U24	TX25_P, TX25_N	S-RIO Transmit	(V_{DDT}, GNDS) / RIO Differential Output	Differential transmitter outputs, Lane 25
R23, R24	TX26_P, TX26_N	S-RIO Transmit	(V_{DDT}, GNDS) / RIO Differential Output	Differential transmitter outputs, Lane 26
P23, P24	TX27_P, TX27_N	S-RIO Transmit	(V_{DDT}, GNDS) / RIO Differential Output	Differential transmitter outputs, Lane 27
B18, A18	TX28_P, TX28_N	S-RIO Transmit	(V_{DDT}, GNDS) / RIO Differential Output	Differential transmitter outputs, Lane 28
B17, A17	TX29_P, TX29_N	S-RIO Transmit	(V_{DDT}, GNDS) / RIO Differential Output	Differential transmitter outputs, Lane 29
B15, A15	TX30_P, TX30_N	S-RIO Transmit	(V_{DDT}, GNDS) / RIO Differential Output	Differential transmitter outputs, Lane 30

Table 42: Pin List (Alphabetical)

Pin Number	Pin Name	Function	Supply / Interface	Pin Function Description
B14, A14	TX31_P, TX31_N	S-RIO Transmit	(V_{DDT}, GNDS) / RIO Differential Output	Differential transmitter outputs, Lane 31
G7, G11, G14, G15, G18, H8, H9, H12, H13, H16, H17, J8, J9, J12, J13, J16, J17, K7, K10, K11, K14, K15, L7, L10, L11, L14, L15, L18, M8, M9, M12, M13, M16, M17, N8, N9, N12, N13, N16, N17, P7, P10, P11, P14, P15, P18, R10, R11, R14, R15, R18, T8, T9, T12, T13, T16, T17, U8, U9, U12, U13, U16, U17, V7, V10, V11, V14, V18			V_{DD} 1.0V Digital Power (CMOS)	Digital power. All pins must be tied to single potential power supply plane.
C21, C22, D3, D4, D22, E2, E23, Y20, AA3, AB3, AB4, AB20, AC5, AC19, AC20, AD19, AD20, AD21			V_{DD3} 3.3V/2.5V Digital IO Power (CMOS)	Digital Interface power. All pins must be tied to single potential power supply plane. Note: The Y20 pin (VDD3A) supplies power to the internal SerDes analog bandgap circuitry to generate a stable internal voltage reference. The VDD3A power supply is internally isolated from the VDD3 supply. The VDD3 and VDD3A supplies may use the same external power supply. It is recommended that a decoupling capacitor of 0.01uF be placed directly on the break-out via for the VDD3A pin under the BGA on the bottom side of the PCB.
D10, D16, E5, E6, E10, E16, F10, F16, F20, F21, J4, J5, J6, K19, K20, K21, R4, R5, R6, T19, T20, T21, W4, W5, W9, W15, Y9, Y15, Y19, AA9, AA15, AA19, AA23, AB23			V_{DDA} 1.0V Analog Power (CMOS)	Analog power. IDT recommends to use common power source for V_{DDS} and V_{DDA}. V_{DD} (core, digital supply) and V_{DDT} should have its own supply and plane.
D7, D13, D19, E3, E7, E13, E19, F4, F5, F6, F13, F19, G20, G21, M4, M5, M6, N19, N20, N21, V4, V5, W6, W12, W19, W20, W21, Y6, Y12, Y18, Y22, AA6, AA12, AA18			V_{DDS} 1.0V SerDes Power (CMOS)	Analog power for SerDes and RX pairs. IDT recommends to use common power source for V_{DDS} and V_{DDA}. V_{DD} (core, digital supply) and V_{DDT} should have its own supply and plane.
A7, A10, A13, A16, A19, B7, B10, B13, B16, B19, F1, F2, G23, G24, J1, J2, K23, K24, M1, M2, N23, N24, R1, R2, T23, T24, V1, V2, W23, W24, AC6, AC9, AC12, AC15, AC18, AD6, AD9, AD12, AD15, AD18			V_{DDT} 1.2V SerDes Power (CMOS)	Analog power for TX pairs. IDT recommends to use common power source for V_{DDS} and V_{DDA}. V_{DD} (core, digital supply) and V_{DDT} should have its own supply and plane.

Note:

1. RX and TX (differential input/output) are all CML based signaling.
2. Automatic swapping of a differential pair, and automatic reordering of lanes are not supported in Level I links (except when connected to another IDT S-RIO Gen2 device) only supported in Level II links.

RapidIO Gen1 devices support the IDLE1 sequence only. It is not possible to reverse the lane ordering of a CPS-1432 port when the IDLE1 sequence is used; therefore, the link partner's lanes must be connected in the correct order.

The use of lane reordering is not recommended for links that support hot swap, or that are expected to successfully downgrade if there is a hardware error. Lane reordering should be restricted to on-board, chip-to-chip links operating with the IDLE2 sequence between IDT Gen2 switches.

3. Unused RX and TX differential pins can be left unconnected.

18. Package Specifications

Package Physical Specifications

Package: FlipChip BGA (FCBGA)

Dimensions: 25 X 25 mm

Ball count: 576

Ball diameter: 0.6 mm

Ball pitch: 1.0 mm

Package Outline Drawings

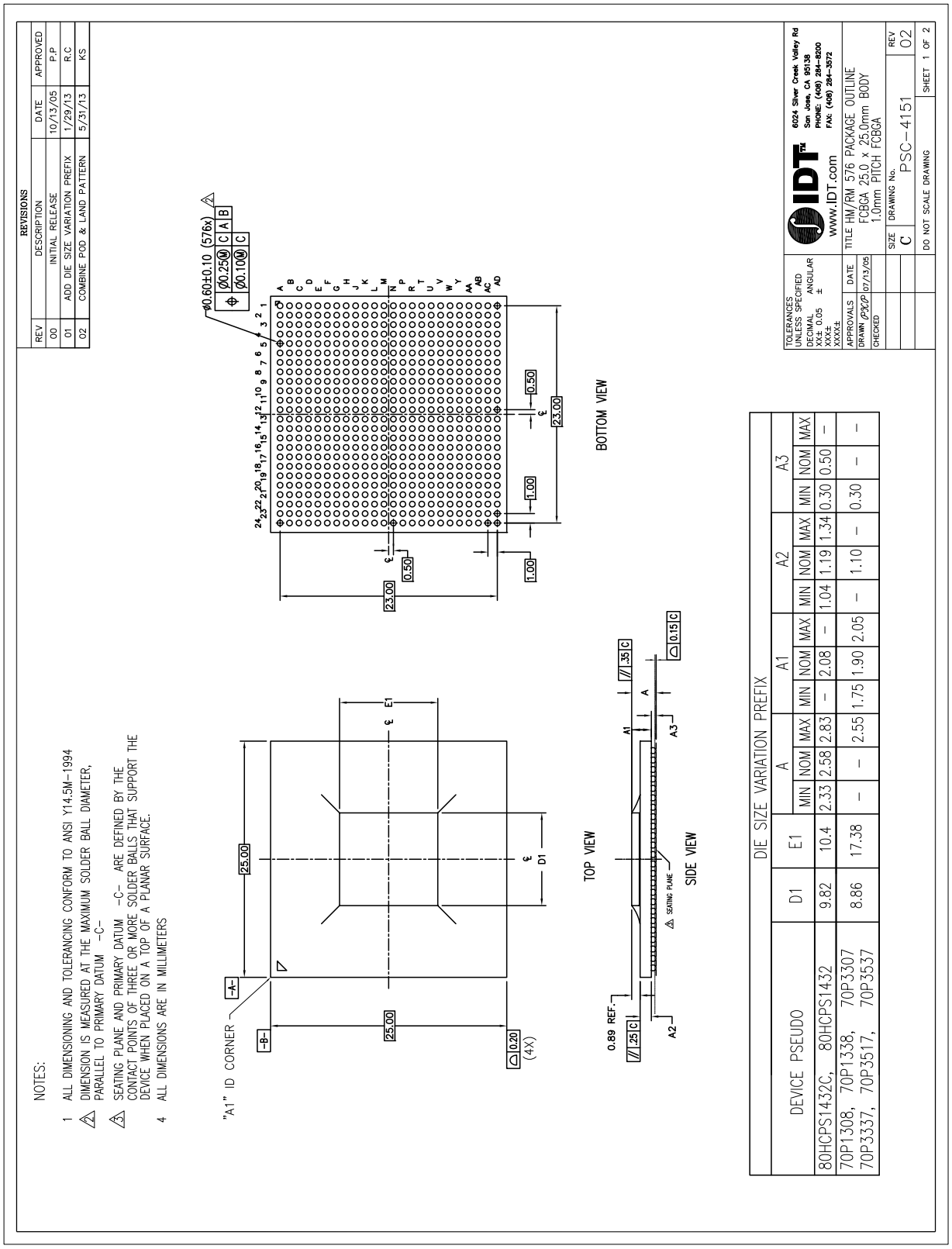

Figure 37: Package Drawing (RM/HMG/HM/HMH) – Sheet 1

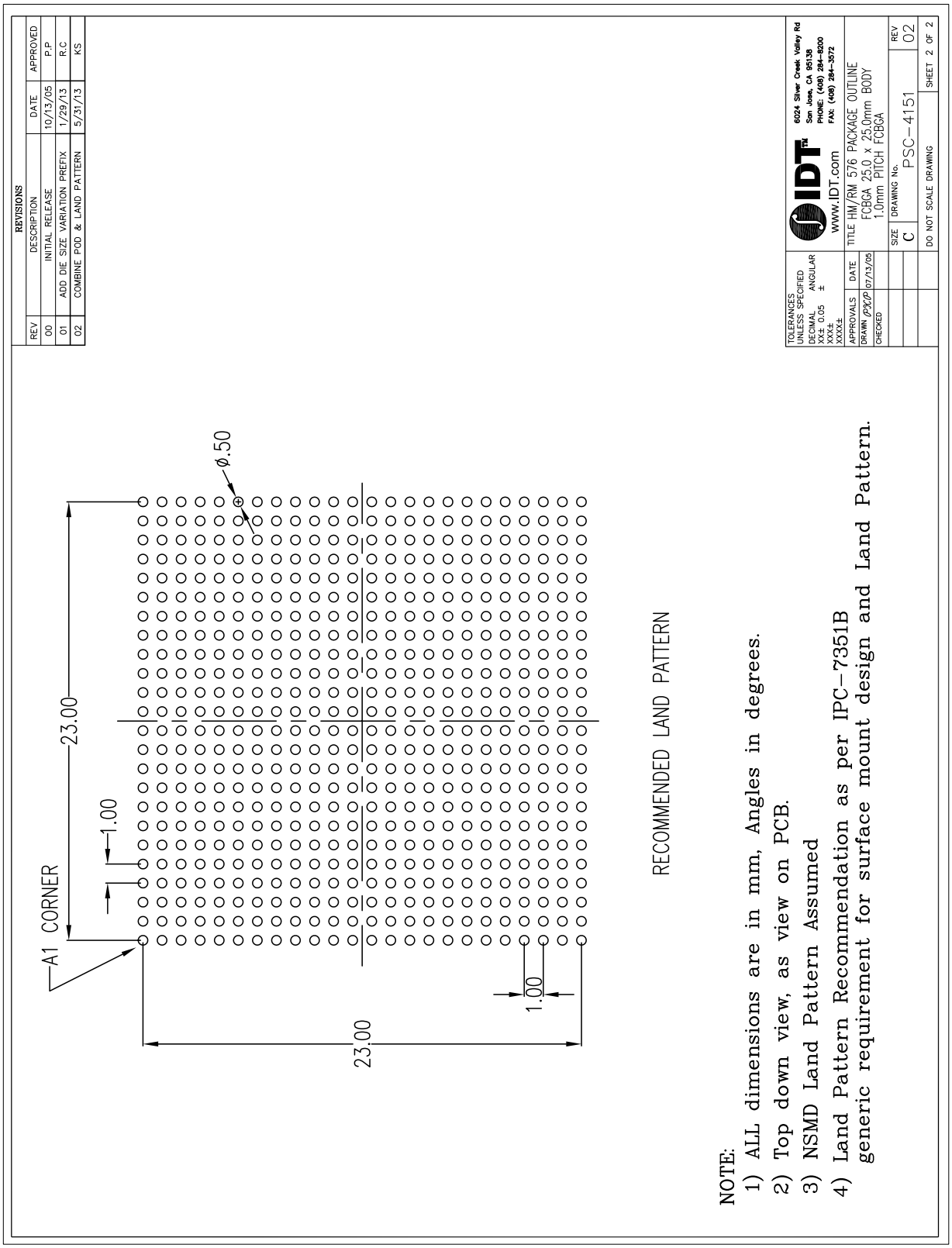

Figure 38: Package Drawing (RM/HMG/HM/HMH) – Sheet 2

Thermal Characteristics

Heat generated by the packaged IC has to be removed from the package to ensure that the IC is maintained within its functional and maximum design temperature limits. If heat buildup becomes excessive, the IC temperature may exceed the temperature limits. A consequence of this is that the IC may fail to meet the performance specifications and the reliability objectives may be affected.

Failure mechanisms and failure rate of a device have an exponential dependence of the IC operating temperatures. Thus, the control of the package temperature, and by extension the Junction Temperature, is essential to ensure product reliability. The CPS-1432 is specified safe for operation when the Junction Temperature is within the recommended limits.

Junction-to-Board/Case Thermal Characteristics (Theta jb/jc)

Table 43 shows the Theta jb and Theta jc thermal characteristics of the CPS-1432 FCBGA package.

Table 43: Thermal Characteristics

Interface	Results
Theta Jb (junction to board)	5.8 ^{o}C/watt
Theta Jc (junction to case)	0.1 ^{o}C/watt

Junction-to-Ambient Thermal Characteristics (Theta ja)

Table 44 shows the Theta Ja thermal characteristic of the CPS-1432 FCBGA package. The results in the table are based on a JEDEC Thermal Test Board configuration (JESD51-9) and do not factor in system-level characteristics. As such, these values are for reference only.

The Theta Ja thermal resistance characteristics of a package depend on multiple system level variables.

Table 44: Junction to Ambient Characteristics

Packages	Theta Ja at Specified Airflow (no Heat Sink)		
	0 m/s	1 m/s	2 m/s
RM/HMG/HM/HMH FCBGA	14.6 ^{o}C/watt	10.4 ^{o}C/watt	8.8 ^{o}C/watt

System-level Characteristics

In an application, the following system-level characteristics and environmental issues must be taken into account:

- Package mounting (vertical / horizontal)
- System airflow conditions (laminar / turbulent)
- Heat sink design and thermal characteristics (see Heat Sink Requirement and Analysis)
- Heat sink attachment method (see Heat Sink Requirement and Analysis)
- PWB size, layer count and conductor thickness
- Influence of the heat dissipating components assembled on the PWB (neighboring effects)

Example on Thermal Data Usage

Based on the $Theta_{JA}$ data and specified conditions, the following formula can be used to derive the junction temperature (T_J) of the CPS-1432 RM package with a 0 m/s airflow:

- $T_J = \Theta_{JA} * P + T_{AMB}$

  Where: T_J is Junction Temperature, Θ_{JA} is $Theta_{JA}$, P is the Power consumption, T_{AMB} is the Ambient Temperature

Assuming a power consumption (P) of 3.5 W and an ambient temperature (T_{AMB}) of 70^oC, the resulting junction temperature (T_J) would be 121.1^oC.

Heat Sink Requirement and Analysis

The CPS-1432 is packaged in a Flip-Chip Ball Grid Array (FCBGA). If a heat sink is required to maintain junction temperatures at or below specified maximum values, it is important that attachment techniques and thermal requirements be critically analyzed to ensure reliability of this interface. Factors to be considered include, but are not limited to the following:

- Surface preparations
- Selection of thermal interface materials
- Curing process
- Shock and vibration requirements
- Thermal expansion coefficient

Each design should be individually analyzed to ensure that a reliable thermal solution is achieved.

Both mechanical and adhesive techniques are available for heat sink attachment. IDT makes no recommendations as to the reliability or effectiveness of either approach. The designer must critically analyze heat sink requirements, selection criteria, and attachment techniques.

For heat sink attachment methods that induce a compressive load to the FCBGA package, the maximum force that can be applied to the package should be limited to 5 gm / BGA ball (provided that the board is supported to prevent any flexing or bowing). The maximum force for the CPS-1432 package is 2.88 Kg.

19. Ordering Information

XXXXX	A	A	A
Device Type	Revision	Package	Process/ Temp. Range

No Identifier	Commercial (0°C to +70°C)
I	Industrial (-40°C to +85°C)

RM	576-FCBGA, RoHS Compliant with exemption
HMG	576-FCBGA, Pb-free, RoHS Compliant
HM	576-FCBGA, Pb/Sn Eutectic Balls & Bumps, not RoHS compliant
HMH	576-FCBGA, Pb/Sn Eutectic Balls & Pb-free Bumps, not RoHS compliant

No Identifier	Revision A or B
C	Revision C

80HCPS1432	Central Packet Switch

Corporate Headquarters
6024 Silver Creek Valley Road
San Jose, CA 95138 USA
www.IDT.com

Sales
1-800-345-7015 or 408-284-8200
Fax: 408-284-2775
www.IDT.com/go/sales

Tech Support
www.IDT.com/go/support

DISCLAIMER Integrated Device Technology, Inc. (IDT) and its affiliated companies (herein referred to as "IDT") reserve the right to modify the products and/or specifications described herein at any time, without notice, at IDT's sole discretion. Performance specifications and operating parameters of the described products are determined in an independent state and are not guaranteed to perform the same way when installed in customer products. The information contained herein is provided without representation or warranty of any kind, whether express or implied, including, but not limited to, the suitability of IDT's products for any particular purpose, an implied warranty of merchantability, or non-infringement of the intellectual property rights of others. This document is presented only as a guide and does not convey any license under intellectual property rights of IDT or any third parties.

IDT's products are not intended for use in applications involving extreme environmental conditions or in life support systems or similar devices where the failure or malfunction of an IDT product can be reasonably expected to significantly affect the health or safety of users. Anyone using an IDT product in such a manner does so at their own risk, absent an express, written agreement by IDT.

Integrated Device Technology, IDT and the IDT logo are trademarks or registered trademarks of IDT and its subsidiaries in the United States and other countries. Other trademarks used herein are the property of IDT or their respective third party owners. For datasheet type definitions and a glossary of common terms, visit www.idt.com/go/glossary. Integrated Device Technology, Inc.. All rights reserved.

OCEAN CHIPS
Океан Электроники
Поставка электронных компонентов

Компания «Океан Электроники» предлагает заключение долгосрочных отношений при поставках импортных электронных компонентов на взаимовыгодных условиях!

Наши преимущества:

- Поставка оригинальных импортных электронных компонентов напрямую с производств Америки, Европы и Азии, а так же с крупнейших складов мира;
- Широкая линейка поставок активных и пассивных импортных электронных компонентов (более 30 млн. наименований);
- Поставка сложных, дефицитных, либо снятых с производства позиций;
- Оперативные сроки поставки под заказ (от 5 рабочих дней);
- Экспресс доставка в любую точку России;
- Помощь Конструкторского Отдела и консультации квалифицированных инженеров;
- Техническая поддержка проекта, помощь в подборе аналогов, поставка прототипов;
- Поставка электронных компонентов под контролем ВП;
- Система менеджмента качества сертифицирована по Международному стандарту ISO 9001;
- При необходимости вся продукция военного и аэрокосмического назначения проходит испытания и сертификацию в лаборатории (по согласованию с заказчиком);
- Поставка специализированных компонентов военного и аэрокосмического уровня качества (Xilinx, Altera, Analog Devices, Intersil, Interpoint, Microsemi, Actel, Aeroflex, Peregrine, VPT, Syfer, Eurofarad, Texas Instruments, MS Kennedy, Miteq, Cobham, E2V, MA-COM, Hittite, Mini-Circuits, General Dynamics и др.);

Компания «Океан Электроники» является официальным дистрибьютором и эксклюзивным представителем в России одного из крупнейших производителей разъемов военного и аэрокосмического назначения **«JONHON»**, а так же официальным дистрибьютором и эксклюзивным представителем в России производителя высокотехнологичных и надежных решений для передачи СВЧ сигналов **«FORSTAR»**.

AVIC JONHON

«JONHON» (основан в 1970 г.)

Разъемы специального, военного и аэрокосмического назначения:

(Применяются в военной, авиационной, аэрокосмической, морской, железнодорожной, горно- и нефтедобывающей отраслях промышленности)

«FORSTAR» (основан в 1998 г.)

ВЧ соединители, коаксиальные кабели, кабельные сборки и микроволновые компоненты:

(Применяются в телекоммуникациях гражданского и специального назначения, в средствах связи, РЛС, а так же военной, авиационной и аэрокосмической отраслях промышленности).

FORSTAR®

Телефон: 8 (812) 309-75-97 (многоканальный)
Факс: 8 (812) 320-03-32
Электронная почта: ocean@oceanchips.ru
Web: http://oceanchips.ru/
Адрес: 198099, г. Санкт-Петербург, ул. Калинина, д. 2, корп. 4, лит. А