CY25568

Spread Spectrum Clock Generator

Features

- 4 to 32 MHz Input frequency range
- 4 to 128 MHz Output frequency range
- accepts clock, crystal and resonator Inputs
- 1x, 2x and 4x frequency multiplication
- Non-modulated reference frequency output
- Center and down spread modulation
- Low power dissipation
  - 3.3 V = 52 mW-typ at 6 MHz
  - 3.3 V = 60 mW-typ at 12 MHz
  - 3.3 V = 72 mW-typ at 24 MHz
- Power-down mode
- Low cycle-to cycle jitter
  - 8 MHz = 195 ps-typ
  - 16 MHz = 175 ps-typ
  - 32 MHz = 100 ps-typ
- Available in 16-pin (150-mil.) SOIC package

Applications

- Printers and MFPs
- LCD panels and monitors
- Digital copiers
- PDAs
- Automotive
- CD-ROM, VCD and DVD
- Networking, LAN/WAN
- Scanners
- Modems
- Embedded digital systems

Benefits

- Peak EMI reduction by 8 to 16dB
- Fast time to market
- Cost reduction

Logic Block Diagram

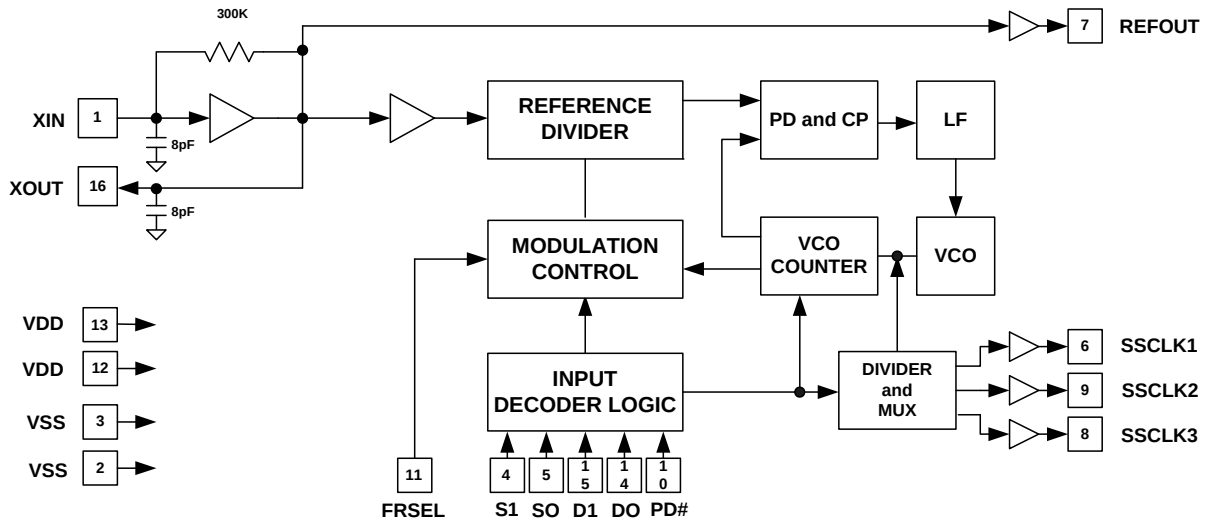

Contents

Pinouts **2**
Pin Definitions **2**
General Description **2**
Absolute Maximum Ratings 3
DC Electrical Characteristics **3**
Timing Electrical Characteristics **3**
Input Frequency Range and Selection **4**
Output Clocks 4
REFOUT 4
SSCLK1, 2 and 3 4
Spread% Selection **5**
3-Level Digital Inputs 5
Power Down (PD#) 6
Modulation Rate 6
Characteristic Curves **7**
SSCG Profiles 8
Application Schematic **9**
Ordering Code Definitions 9
Package Diagram **10**
Acronyms **11**
Document Conventions **11**
Units of Measure 11
Document History Page **12**
Sales, Solutions, and Legal Information **13**
Worldwide Sales and Design Support 13
Products 13
PSoC Solutions 13

Pinouts

Figure 1. CY25568 - 16 Pin SOIC

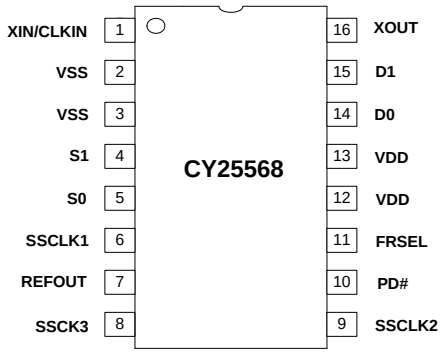

Pin Definitions

Pin	Function	Description
1	Xin/CLK	Clock, crystal or ceramic resonator input pin
2	V_{SS}	Power supply ground.
3	V_{SS}	Power supply ground.
4	S1	Digital Spread% control pin 3-Level input (H-M-L). Default= M.
5	S0	Digital Spread% control pin 3-Level input (H-M-L). Default= M.
6	SSCLK1	Output clock. Refer to Table 2 on page 5 for frequency programmability.
7	REFOUT	Reference clock output. The same frequency as Xin/CLK input.
8	SSCLK3	Output clock. Refer to Table 2 on page 5 for frequency programmability.
9	SSCLK2	Output clock. Refer to Table 2 on page 5 for frequency programmability.
10	PD#	Power-down control Internally pulled to V_{DD}, Default= High.
11	FRSEL	Input frequency range selection digital control input 3-Level input (H-M-L). Default= M.
12	V_{DD}	Positive power supply.
13	V_{DD}	Positive power supply.
14	D0	3-Level (H-M-L) Digital output clock scaling control. Refer to Table 2 on page 5. Default= M.
15	D1	3-Level (H-M-L) Digital output clock scaling control. Refer to Table 2 on page 5. Default= M.
16	XOUT	Crystal or ceramic resonator output pin

General Description

The Cypress CY25568 is a spread spectrum clock generator (SSCG) IC used for the purpose of reducing electro magnetic interference (EMI) found in today's high-speed digital electronic systems.

The CY25568 uses a Cypress proprietary phase-locked loop (PLL) and spread spectrum clock (SSC) technology to synthesize and modulate the frequency of the digital clock. By frequency modulating the clock, the measured EMI at the fundamental and harmonic frequencies is greatly reduced.

This reduction in radiated energy can significantly reduce the cost of complying with regulatory agency requirements and improve time to market without degrading system performance.

The CY25568 input frequency range is 4 to 32 MHz and accepts clock, crystal, and ceramic resonator inputs. The output clocks can be programmed to produce 1x, 2x, and 4x multiplication of the input frequency with spread spectrum. A separate non-modulated reference clock is also provided.

The use of 2x or 4x frequency multiplication eliminates the need for higher order crystals and allows the user to generate up to 128 MHz spread spectrum clock (SSC) by using only first order crystals. This reduces the cost while improving the system clock accuracy, performance and complexity

center spread or down spread frequency modulation can be selected by the user based on 4 discrete values of Spread% for each spread mode with the option of a non-spread mode for system test and verification purposes.

The CY25568 is available in a 16 pin SOIC (150-mil.) package with a commercial operating temperature range of 0 to 70 °C. Contact Cypress for availability of –25 to +85 °C industrial temperature range operation. Refer to CY25811/12/14 products for 8-pin SOIC package versions of the CY25568.

Absolute Maximum Ratings [1]

Exceeding maximum ratings may shorten the useful life of the device. User guidelines are not tested.

Supply voltage (V_{DD}): .....+5.5 V

Input voltage relative to V_{DD}: ..... V_{DD}+0.3 V

Input voltage relative to VSS: .....V_{SS}–0.3 V

Operating temperature: ..... 0 to 70 ° c

storage Temperature: ..... –65 to +150 ° C

Note: Operation at any Absolute Maximum Rating is not implied.

DC Electrical Characteristics

Test Conditions: V_{DD}=3.3 V, T=25, unless otherwise noted

Symbol	Parameter	Min	Typ.	Max	Unit	Conditions
VDD	Power supply range	2.90	3.3	3.60	V	
VINH	Input high voltage	0.85 V_{DD}	V_{DD}	V_{DD}	V	S0,S1,D0,D1 and FRSEL Inputs
VINM	Input middle voltage	0.40V_{DD}	0.50V_{DD}	0.60V_{DD}	V	S0,S1,D0,D1 and FRSEL Inputs
VINL	Input low voltage	0.0	0.0	0.15V_{DD}	V	S0,S1,D0,D1 and FRSEL Inputs
VINH1	Input high voltage	2.0	-	-	V	PD# input only
VINL1	Input low voltage	-	-	0.8	V	PD# input only
VOH1	Output high voltage	2.4	-	-	V	IOH = 4 ma, all output clocks
VOH2	Output high voltage	2.0	-	-	V	IOH = 6 ma, all output clocks
VOL1	Output low voltage	-	-	0.4	V	IOL = 4 ma, all output clocks
VOL2	Output low voltage	-	-	1.2	V	IOL = 10 ma, all output clocks
Cin1	Input capacitance	6.0	7.5	9.0	pF	Xin (Pin 1) and Xout (Pin 16)
Cin2	Input capacitance	3.5	4.5	6.0	pF	All digital inputs
IDD1	Power supply current	-	13.0	16.0	mA	Fin=4 MHz, no load (refer to Figure 4 on page 8)
IDD2	Power supply current	-	28.0	32.0	mA	Fin=32 MHz, no load (refer to Figure 4 on page 8)
IDD3	Power supply current	-	300	400	ìA	PD#=GND

Timing Electrical Characteristics

Test Conditions: V_{DD}=3.3 V, T=25 C, CL=15pF. Rise/Fall time at 0.4 and 2.4 V, duty cycle at 1.5 V

Symbol	Parameter	Min	Typ.	Max	Unit	Conditions
ICLKFR	Input frequency range	4		32	MHz	Clock, crystal or ceramic resonator input
trise1	Clock rise time	2.4	3.2	4.0	ns	SSCLK1,2, and 3, all cases when 1x or 2x scaling selected, when 4x if FRSEL=1 or 0
tfall1	Clock fall time	2.4	3.2	4.0	ns	SSCLK1,2, and 3, all cases when 1x or 2x scaling selected, when 4x if FRSEL=1 or 0
trise2	Clock rise time	1.2	1.6	2.0	ns	SSCLK2, and 3, only when 4x scaling is selected and FRSEL=M
tfall2	Clock fall time	1.2	1.6	2.0	ns	SSCLK2, and 3, only when 4x scaling is selected and FRSEL=M
trise3	Clock rise time	2.4	3.2	4.0	ns	REFOUT only
tfall3	Clock fall time	2.4	3.2	4.0	ns	REFOUT only
CDCin	Input clock duty cycle	20	50	80	%	XIN/CLK (Pin 1)
CDCout	Output clock duty cycle	45	50	55	%	SSCLK1,2 and 3
CCJ1	Cycle-to-cycle jitter	-	195	260	ps	Fin=8 MHz (refer to Figure 4 on page 8)
CCJ2	Cycle-to-cycle jitter	-	170	225	ps	Fin=16 MHz (refer to Figure 4 on page 8)

Notes

1. Single Power Supply: The voltage on any input or IO pin cannot exceed the power pin during power-up.

Timing Electrical Characteristics

Test Conditions: V_{DD}=3.3 V, T=25 C, CL=15pF. Rise/Fall time at 0.4 and 2.4 V, duty cycle at 1.5 V

CCJ3	Cycle-to-cycle jitter	-	100	150	ps	Fin=32 MHz (refer to Figure 4A)

Input Frequency Range and Selection

The CY25568 input frequency range is 4 to 32 MHz. This range is divided into 3 segments and controlled by 3-Level FRSEL pin as given in Table 1.

Table 1. Input Frequency Selection

FRSEL	INPUT FREQUENCY RANGE
0	4.0 to 8.0 MHz
1	8.0 to 16.0 MHz
M	16.0 to 32.0 MHz

Output Clocks

The CY25568 provides 4 separate output clocks, REFOUT, SSCLK1, SSCLK2 and SSCLK3, for use in a wide variety of applications.Each clock output is described in detail.

REFOUT

REFOUT is a 3.3 volt CMOS level non-modulated copy of the clock at XIN/CLKIN.

SSCLK1, 2 and 3

SSCLK1, SSCLK2 and SSCLK3 are Spread Spectrum clock outputs used for the purpose of reducing EMI in digital systems. Each clock can drive separate nets with a capacitive load of up to 20 pF.

The frequency function of these clock outputs are selected by using 3-Level D0 and D1 digital inputs and are given in Table 2.

Table 2. Output Clocks Function Selection

D0	D1	REFOUT	SSCLK1	SSCLK2	SSCLK3
0	0	REF	REF	1x	1x
0	M	REF	1x	2x	2x
0	1	REF	REF	2x	2x
M	0	REF	REF	1x	2x
M	M	REF	REF	REF	REF
M	1	REF	REF	2x	4x
1	0	REF	REF	4x	4x
1	M	REF	1x	2x	4x
1	1	REF	1x	2x	4x

REF is the same non-modulated frequency as the input clock.

1x, 2x, or 4x are modulated and multiplied (in the case of 2x and 4x) frequency of the input clock.

Spread % Selection

The CY25568 provides Center-Spread, Down-Spread and No-Spread functions. These functions and the amount of Spread% are selected by using 3-Level S0 and S1 digital inputs and are given in Table 3.

Table 3. Spread% Selection

XIN (MHz)	FRSEL	S1=0 S0=0	S1=0 S0=M	S1=0 S0=1	S1=M S0=0	S1=1 S0=1	S1=1 S0=0	S1=M S0=1	S1=1 S0=M	S1=M S0=M
		CENTER (%)	CENTER (%)	CENTER (%)	CENTER (%)	DOWN (%)	DOWN (%)	DOWN (%)	DOWN (%)	NO SPREAD
4-5	0	+/–1.4	+/–1.2	+/–0.6	+/–0.5	–3.0	–2.2	–1.9	–0.7	0
5-6	0	+/–1.3	+/–1.1	+/–0.5	+/–0.4	–2.7	–1.9	–.7	–0.6	0
6-7	0	+/–1.2	+/–0.9	+/–0.5	+/–0.4	–2.5	–1.8	–1.5	–0.6	0
7-8	0	+/–1.1	+/–0.9	+/–0.4	+/–0.3	–2.3	–1.7	–1.4	–0.5	0
8-10	1	+/–1.4	+/–1.2	+/–0.6	+/–0.5	–3.0	–2.2	–1.9	–0.7	0
10-12	1	+/–1.3	+/–1.1	+/–0.5	+/–0.4	–2.7	–1.9	–1.7	–0.6	0
12-14	1	+/–1.2	+/–0.9	+/–0.5	+/–0.4	–2.5	–1.8	–1.5	–0.6	0
14-16	1	+/–1.1	+/–0.9	+/–0.4	+/–0.3	–2.3	–1.7	–1.4	–0.5	0
16-20	M	+/–1.4	+/–1.2	+/–0.6	+/–0.5	–3.0	–2.2	–1.9	–0.7	0
20-24	M	+/–1.3	+/–1.1	+/–0.5	+/–0.4	–2.7	–1.9	–1.7	–0.6	0
24-28	M	+/–1.2	+/–0.9	+/–0.5	+/–0.4	–2.5	–1.8	–1.5	–0.6	0
28-32	M	+/–1.1	+/–0.9	+/–0.4	+/–0.3	–2.3	–1.7	–1.4	–0.5	0

3-Level Digital Inputs

Figure 2. 3-Level Logic

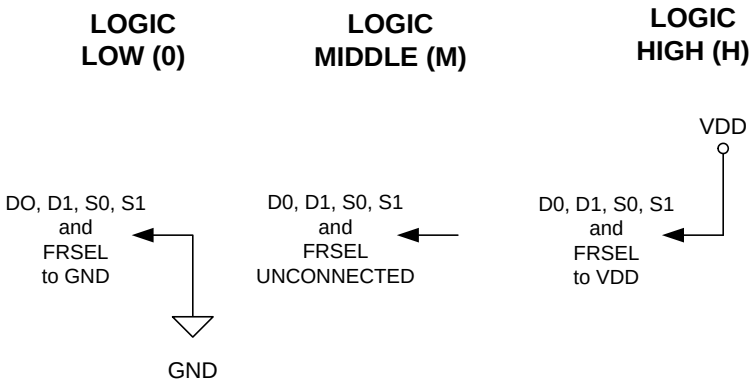

S0, S1, D0, D1, and FRSEL digital inputs of the CY25568 are designed to sense 3 different logic levels designated as High - 1, Low- 0 and Middle- M. With this 3-Level digital input logic, the CY25568 is able to detect 9 different logic states in the case of (S0, S1) and (D0, D1) logic pairs and 3 different logic states in the case of FRSEL.

S0, S1, D0, D1, and FRSEL pins include an on chip 20K (10K /10K) resistor divider. No external application resistors are needed to implement the 3-Level logic levels as shown in the following:

Logic State 0 = 3-Level logic pin connected to GND.

Logic State M = 3-Level logic pin left floating (no connection).

Logic State 1 = 3-Level logic pin connected to VDD.

Figure 2 illustrates how to implement 3-Level Logic.

Power-down (PD#)

CY25568 includes a Power-down (PD#, Pin 10) function. This input uses standard 2-Level CMOS logic and is internally pulled up to VDD (HIGH). Connect this pin to GND if power is to be turned off.

Modulation Rate

Spread Spectrum Clock Generators use frequency modulation (FM) to distribute energy over a specific band of frequencies. The maximum frequency of the clock (fmax) and minimum frequency of the clock (fmin) determine this band of frequencies. The time required to transition from fmin to fmax and back to fmin is the period of the Modulation Rate, Tmod. The Modulation Rate of SSCG clocks are generally referred to in terms of frequency or fmod = 1/Tmod.

The input clock frequency, fin, and the internal divider determine the modulation rate.

In the case of CY25568, the (spread spectrum) modulation rate is given by the following formula: fmod = fin/DR

Where; fmod is the modulation rate, fin is the Input Frequency and DR is the divider ratio as given in Table 4. Notice that Input frequency range is set by FRSEL.

Table 4. Modulation Rate

FRSEL	INPUT FREQUENCY RANGE (MHz)	DIVIDER RATIO (DR)
0	4 to 8	128
1	8 to 16	256
M	16 to 32	512

Characteristic Curves

The following curves demonstrate the characteristic behavior of the CY25568 when tested over a number of environmental and application specific parameters. These are typical performance curves and are not meant to replace any parameter specified in tables "DC Electrical Characteristics" on page 4 and "Timing Electrical Characteristics" on page 4.

Figure 3. Jitter vs. Input Frequency (No Load)

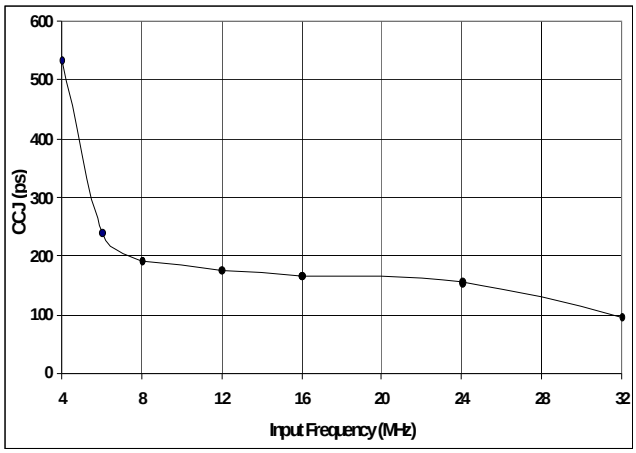

Figure 5. IDD vs. Frequency (FRSEL = 0, 1, M)

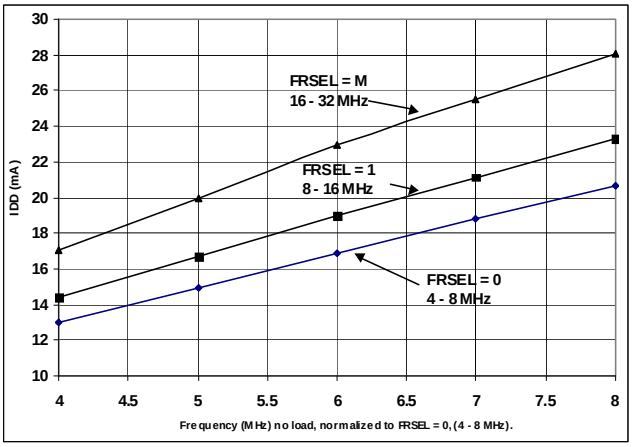

Figure 4. Bandwidth% vs. Temperature

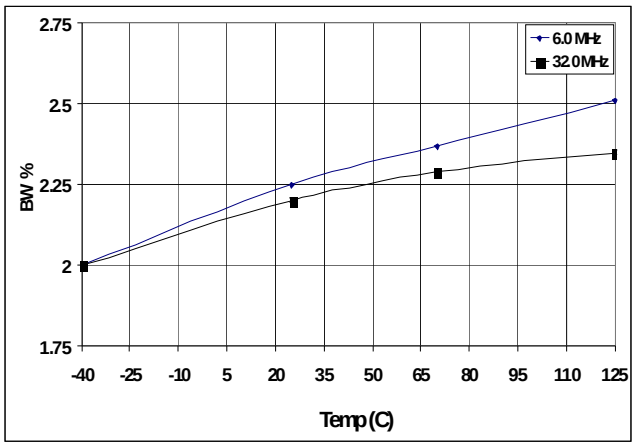

Figure 6. Bandwidth% vs. VDD

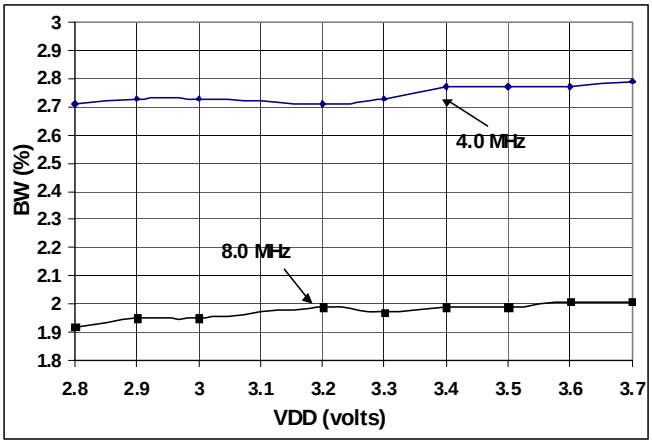

SSCG Profiles

The CY25568 uses a non-linear frequency profile as shown in Figure 7. The use of Cypress proprietary “optimized” frequency profile maintains flat energy distribution over the fundamental and higher order harmonics. This results in additional EMI reduction in electronic systems.

Figure 7. Spread Spectrum Profiles (Frequency versus Time)

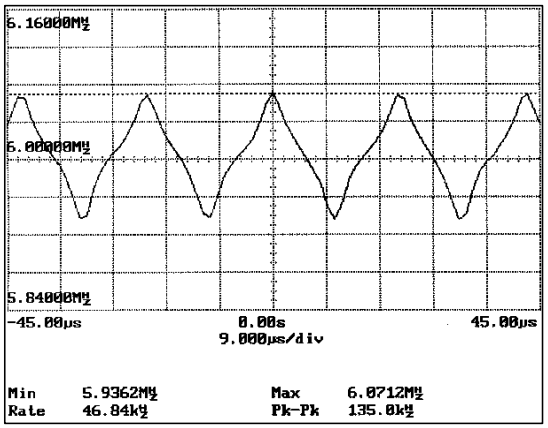

Xin = 6.0 MHz	SSCLK1 = 6.0 MHz
S1. S0 = 0	D1. D0 = 1

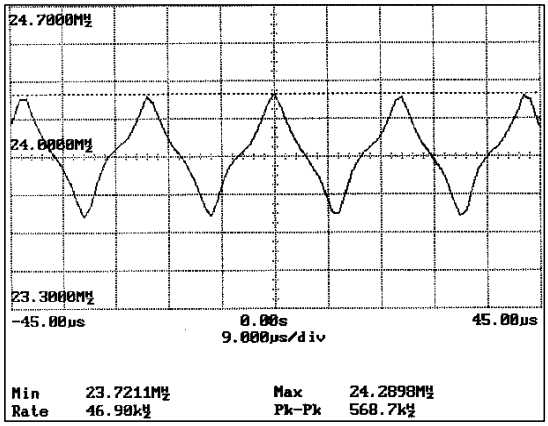

Xin = 24.0 MHz	SSCLK1 = 24.0 MHz
S1, S0 = 0	D1, D0 = 1

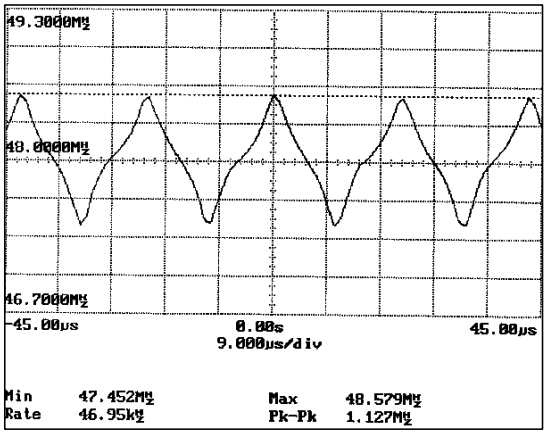

Xin = 12.0 MHz	SSCLK1 = 48.0 MHz
S1. S0 = 0	D1. D0 = 1

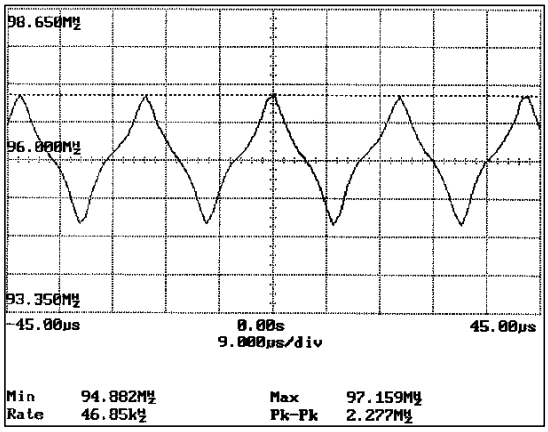

Xin = 24.0 MHz	SSCLK1 = 96.0 MHz
S1. S0 = 0	D1. D0 = 1

Application Schematic

Figure 8. Application Schematic

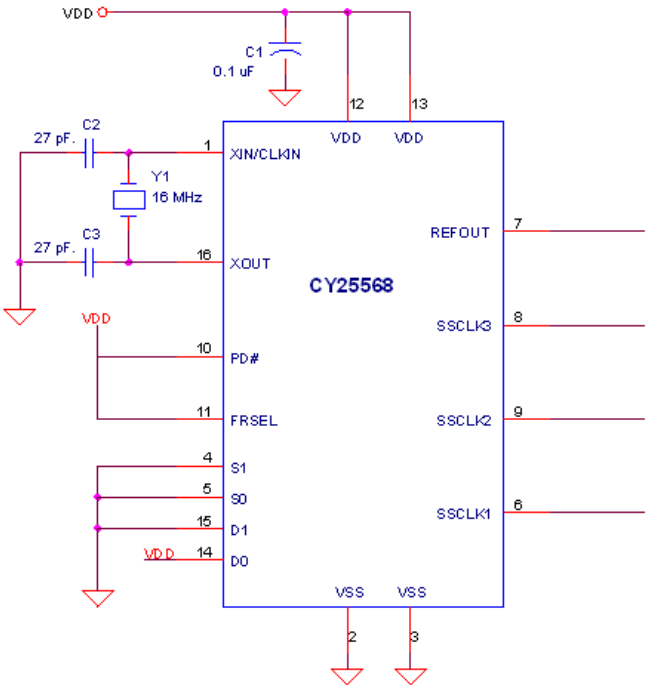

Ordering Information

Part No.	Package	Operating Temperature Range
Pb-free		
CY25568SXC	16 Pin SOIC	0 to 70 °C
CY25568SXCT	16 Pin SOIC – Tape and Reel	0 to 70 °C

Ordering Code Definitions

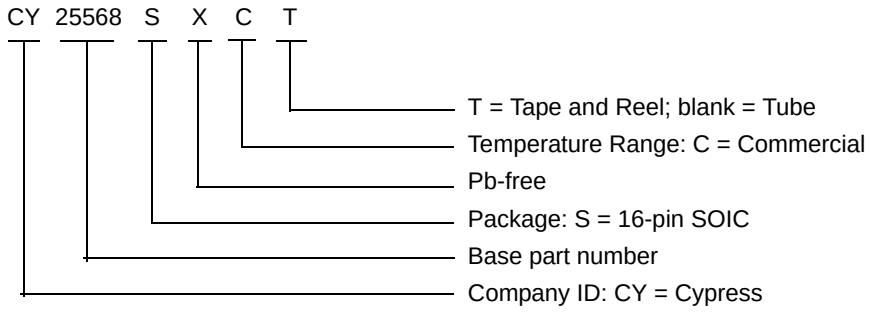

Package Diagram

Figure 9. 16-Pin (150-Mil) SOIC

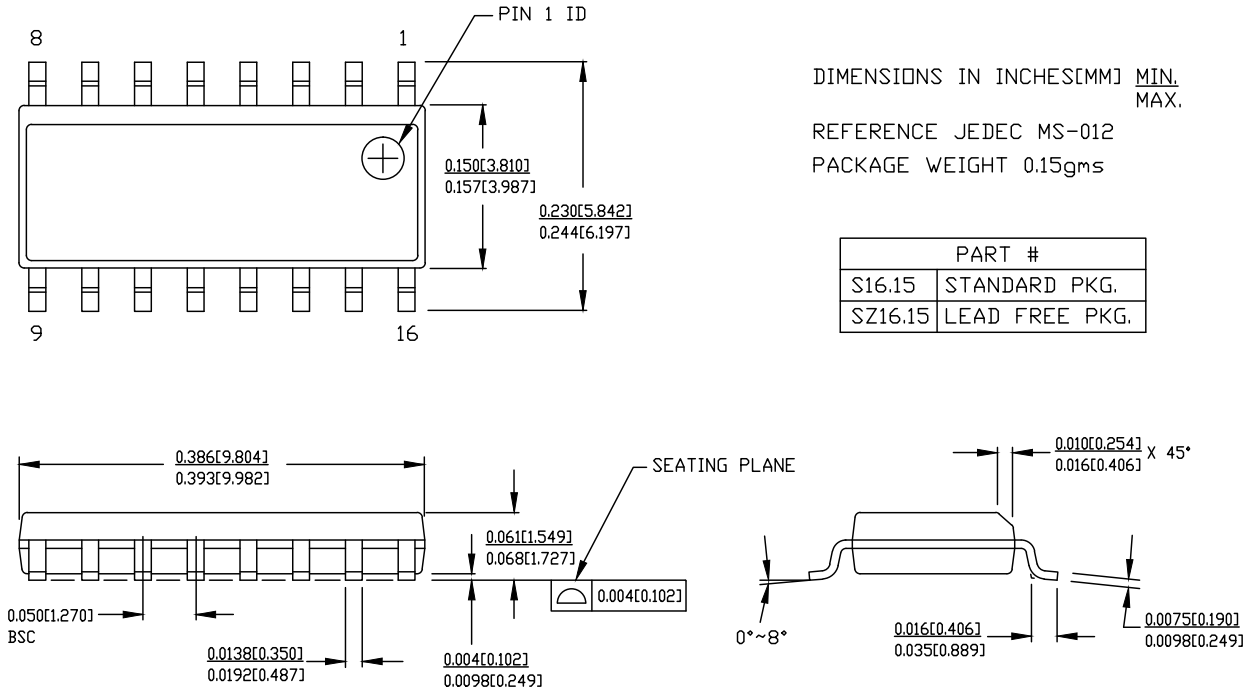

51-85068 *C

Acronyms

Acronym	Description
DVD	digital versatile/video disc
EMI	electromagnetic interference
I/O	input/output
LAN	local area network
LCD	liquid crystal display
PLL	phase-locked loop
SOIC	small-outline integrated circuit
SSC	spread spectrum clock
SSCG	spread spectrum clock generator
VCD	video compact disc
WAN	wide area network

Document Conventions

Units of Measure

Symbol	Unit of Measure
%	percent
°C	degree Celsius
dB	decibel
mA	milliamperes
MHz	Megahertz
mm	millimeter
ms	milliseconds
mW	milliwatts
ns	nanoseconds
pF	picofarad
ps	picoseconds
V	volts
Ω	ohms
W	watts

Document History Page

Document Title: CY25568 Spread Spectrum Clock Generator Document Number: 38-07111				
Rev.	**ECN**	**Orig. of Change**	**Submission Date**	**Description of Change**
**	107515	NDP	06/14/01	Convert from IMI to Cypress
*A	108182	NDP	07/03/01	Delete “Junction Temp” in Absolute maximum Ratings (page 4)
*B	122682	RBI	12/21/02	Added power-up requirements to Absolute Maximum Ratings information.
*C	2658020	KVM/PYRS	02/16/09	Updated Ordering Information Table with Pb-free part numbers. Deleted the table “16 Pin SOIC Outline Dimensions (150 mil)” Updated template
*D	3319217	BASH	07/08/18	Update to latest template Added Ordering Code Definitions Updated Package Diagram Added Acronyms Added Units of Measure Added Contents

Sales, Solutions, and Legal Information

Worldwide Sales and Design Support

Cypress maintains a worldwide network of offices, solution centers, manufacturer's representatives, and distributors. To find the office closest to you, visit us at Cypress Locations.

Products

Automotive	cypress.com/go/automotive
Clocks & Buffers	cypress.com/go/clocks
Interface	cypress.com/go/interface
Lighting & Power Control	cypress.com/go/powerpsoc
	cypress.com/go/plc
Memory	cypress.com/go/memory
Optical & Image Sensing	cypress.com/go/image
PSoC	cypress.com/go/psoc
Touch Sensing	cypress.com/go/touch
USB Controllers	cypress.com/go/USB
Wireless/RF	cypress.com/go/wireless

PSoC Solutions

psoc.cypress.com/solutions

PSoC 1 | PSoC 3 | PSoC 5

© Cypress Semiconductor Corporation, 2001-2011. The information contained herein is subject to change without notice. Cypress Semiconductor Corporation assumes no responsibility for the use of any circuitry other than circuitry embodied in a Cypress product. Nor does it convey or imply any license under patent or other rights. Cypress products are not warranted nor intended to be used for medical, life support, life saving, critical control or safety applications, unless pursuant to an express written agreement with Cypress. Furthermore, Cypress does not authorize its products for use as critical components in life-support systems where a malfunction or failure may reasonably be expected to result in significant injury to the user. The inclusion of Cypress products in life-support systems application implies that the manufacturer assumes all risk of such use and in doing so indemnifies Cypress against all charges.

Any Source Code (software and/or firmware) is owned by Cypress Semiconductor Corporation (Cypress) and is protected by and subject to worldwide patent protection (United States and foreign), United States copyright laws and international treaty provisions. Cypress hereby grants to licensee a personal, non-exclusive, non-transferable license to copy, use, modify, create derivative works of, and compile the Cypress Source Code and derivative works for the sole purpose of creating custom software and or firmware in support of licensee product to be used only in conjunction with a Cypress integrated circuit as specified in the applicable agreement. Any reproduction, modification, translation, compilation, or representation of this Source Code except as specified above is prohibited without the express written permission of Cypress.

Disclaimer: CYPRESS MAKES NO WARRANTY OF ANY KIND, EXPRESS OR IMPLIED, WITH REGARD TO THIS MATERIAL, INCLUDING, BUT NOT LIMITED TO, THE IMPLIED WARRANTIES OF MERCHANTABILITY AND FITNESS FOR A PARTICULAR PURPOSE. Cypress reserves the right to make changes without further notice to the materials described herein. Cypress does not assume any liability arising out of the application or use of any product or circuit described herein. Cypress does not authorize its products for use as critical components in life-support systems where a malfunction or failure may reasonably be expected to result in significant injury to the user. The inclusion of Cypress' product in a life-support systems application implies that the manufacturer assumes all risk of such use and in doing so indemnifies Cypress against all charges.

Use may be limited by and subject to the applicable Cypress software license agreement.

OCEAN CHIPS
Океан Электроники
Поставка электронных компонентов

Компания «Океан Электроники» предлагает заключение долгосрочных отношений при поставках импортных электронных компонентов на взаимовыгодных условиях!

Наши преимущества:

- Поставка оригинальных импортных электронных компонентов напрямую с производств Америки, Европы и Азии, а так же с крупнейших складов мира;
- Широкая линейка поставок активных и пассивных импортных электронных компонентов (более 30 млн. наименований);
- Поставка сложных, дефицитных, либо снятых с производства позиций;
- Оперативные сроки поставки под заказ (от 5 рабочих дней);
- Экспресс доставка в любую точку России;
- Помощь Конструкторского Отдела и консультации квалифицированных инженеров;
- Техническая поддержка проекта, помощь в подборе аналогов, поставка прототипов;
- Поставка электронных компонентов под контролем ВП;
- Система менеджмента качества сертифицирована по Международному стандарту ISO 9001;
- При необходимости вся продукция военного и аэрокосмического назначения проходит испытания и сертификацию в лаборатории (по согласованию с заказчиком);
- Поставка специализированных компонентов военного и аэрокосмического уровня качества (Xilinx, Altera, Analog Devices, Intersil, Interpoint, Microsemi, Actel, Aeroflex, Peregrine, VPT, Syfer, Eurofarad, Texas Instruments, MS Kennedy, Miteq, Cobham, E2V, MA-COM, Hittite, Mini-Circuits, General Dynamics и др.);

Компания «Океан Электроники» является официальным дистрибьютором и эксклюзивным представителем в России одного из крупнейших производителей разъемов военного и аэрокосмического назначения **«JONHON»**, а так же официальным дистрибьютором и эксклюзивным представителем в России производителя высокотехнологичных и надежных решений для передачи СВЧ сигналов **«FORSTAR»**.

AVIC JONHON

«JONHON» (основан в 1970 г.)

Разъемы специального, военного и аэрокосмического назначения:

(Применяются в военной, авиационной, аэрокосмической, морской, железнодорожной, горно- и нефтедобывающей отраслях промышленности)

«FORSTAR» (основан в 1998 г.)

ВЧ соединители, коаксиальные кабели, кабельные сборки и микроволновые компоненты:

(Применяются в телекоммуникациях гражданского и специального назначения, в средствах связи, РЛС, а так же военной, авиационной и аэрокосмической отраслях промышленности).

FORSTAR®

Телефон: 8 (812) 309-75-97 (многоканальный)
Факс: 8 (812) 320-03-32
Электронная почта: ocean@oceanchips.ru
Web: http://oceanchips.ru/
Адрес: 198099, г. Санкт-Петербург, ул. Калинина, д. 2, корп. 4, лит. А