## Features

- High-density, High-performance, Electrically-erasable Complex Programmable Logic Device
  - 3.0 to 3.6V Operating Range
  - 32 Macrocells
  - 5 Product Terms per Macrocell, Expandable up to 40 per Macrocell
  - 44 Pins
  - 15 ns Maximum Pin-to-pin Delay
  - Registered Operation up to 77 MHz
  - Enhanced Routing Resources
- In-System Programmability (ISP) via JTAG
- Flexible Logic Macrocell
  - D/T Latch Configurable Flip-flops
  - Global and Individual Register Control Signals
  - Global and Individual Output Enable
  - Programmable Output Slew Rate
  - Programmable Output Open Collector Option
  - Maximum Logic Utilization by Burying a Register with a COM Output
- Advanced Power Management Features
  - Pin-controlled 0.75 mA Standby Mode
  - Programmable Pin-keeper Inputs and I/Os
  - Reduced-power Feature per Macrocell
- Available in Commercial and Industrial Temperature Ranges
- Available in 44-lead PLCC and TQFP
- Advanced EEPROM Technology
  - 100% Tested
  - Completely Reprogrammable
  - 10,000 Program/Erase Cycles
  - 20-year Data Retention
  - 2000V ESD Protection
  - 200 mA Latch-up Immunity
- JTAG Boundary-scan Testing to IEEE Std. 1149.1-1990 and 1149.1a-1993 Supported
- PCI-compliant
- Security Fuse Feature
- Green (Pb/Halide-fee/RoHS Compliant) Package Options

## Enhanced Features

- Improved Connectivity (Additional Feedback Routing, Alternate Input Routing)
- Output Enable Product Terms
- D Latch Mode
- Combinatorial Output with Registered Feedback within Any Macrocell
- Three Global Clock Pins
- Fast Registered Input from Product Term
- Programmable “Pin-keeper” Option
- $V_{CC}$ Power-up Reset Option
- Pull-up Option on JTAG Pins TMS and TDI
- Advanced Power Management Features
  - Individual Macrocell Power Option

# High-performance EEPROM CPLD

# ATF1502ASV

1615J–PLD–01/06

# 1. Description

The ATF1502ASV is a high-performance, high-density complex programmable logic device (CPLD) that utilizes Atmel's proven electrically-erasable technology. With 32 logic macrocells and up to 36 inputs, it easily integrates logic from several TTL, SSI, MSI, LSI and classic PLDs. The ATF1502ASV's enhanced routing switch matrices increase usable gate count and the odds of successful pin-locked design modifications.

The ATF1502ASV has up to 32 bi-directional I/O pins and four dedicated input pins, depending on the type of device package selected. Each dedicated pin can also serve as a global control signal, register clock, register reset or output enable. Each of these control signals can be selected for use individually within each macrocell.

**Figure 1-1.** 44-lead TQFP Top View

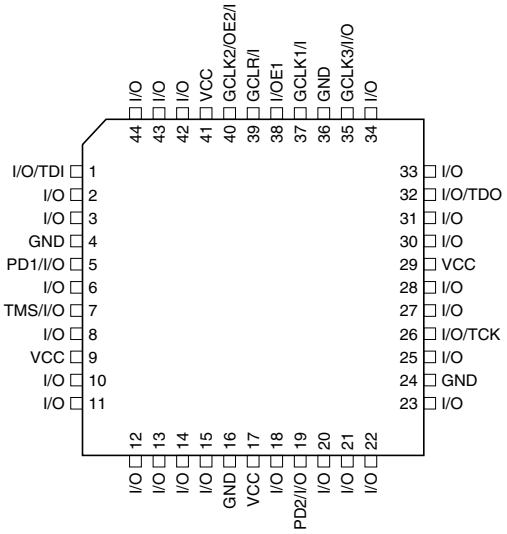


**Figure 1-2.** 44-lead PLCC Top View

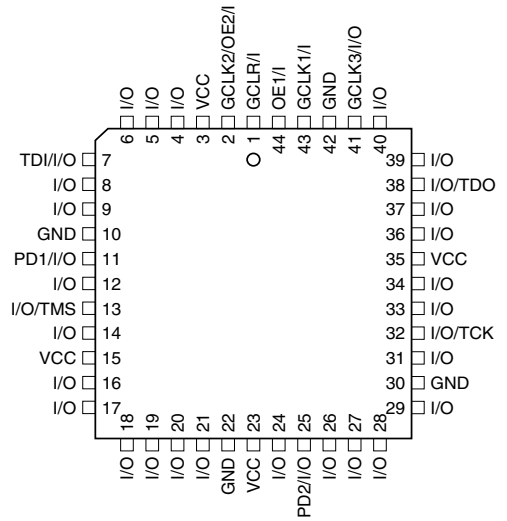

**Figure 1-3.** Block Diagram

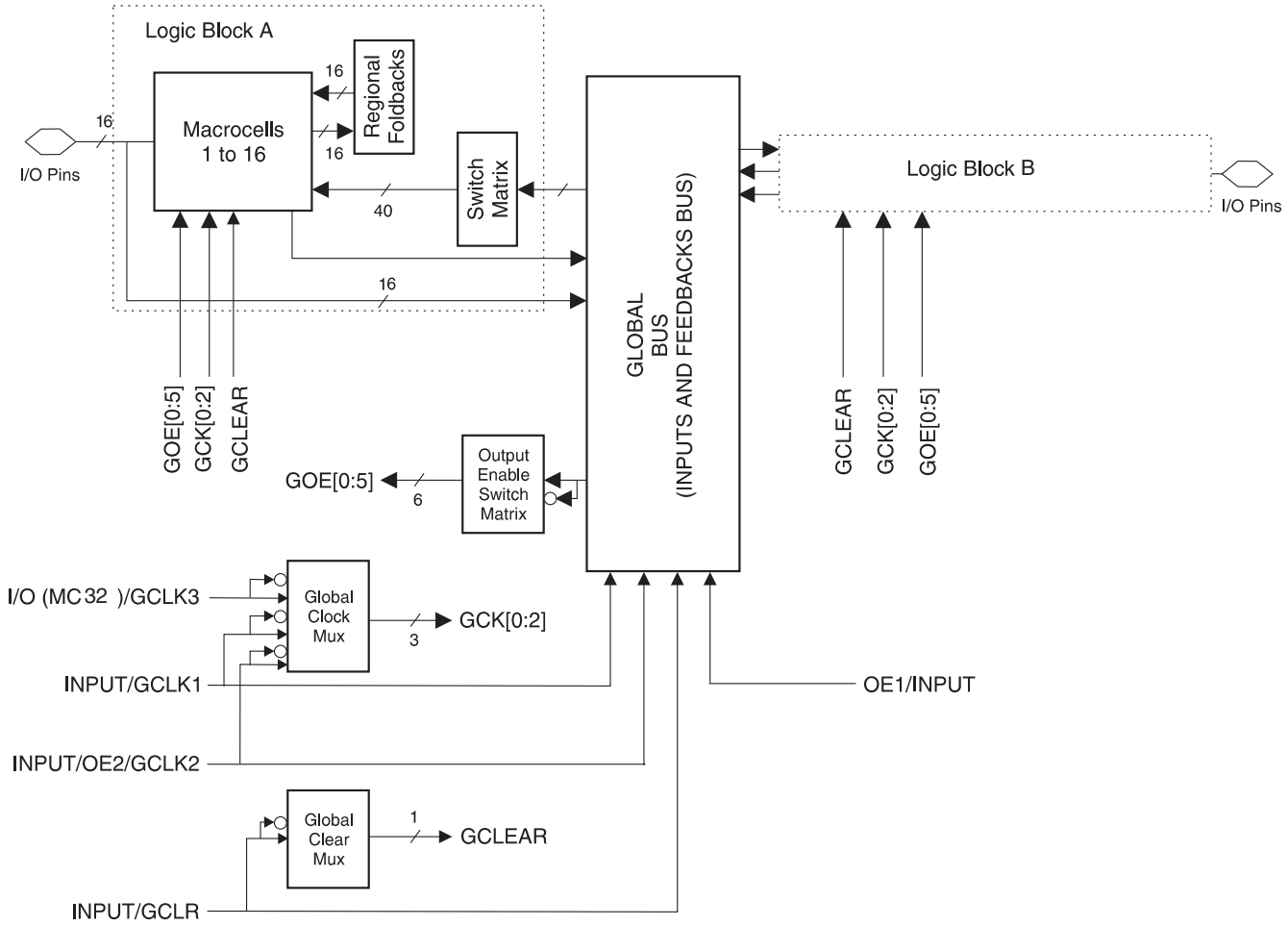


Each of the 32 macrocells generates a buried feedback that goes to the global bus. Each input and I/O pin also feeds into the global bus. The switch matrix in each logic block then selects 40 individual signals from the global bus. Each macrocell also generates a foldback logic term that goes to a regional bus. Cascade logic between macrocells in the ATF1502ASV allows fast, efficient generation of complex logic functions. The ATF1502ASV contains four such logic chains, each capable of creating sum term logic with a fan-in of up to 40 product terms.

The ATF1502ASV macrocell, shown in Figure 1, is flexible enough to support highly complex logic functions operating at high speed. The macrocell consists of five sections: product terms and product term select multiplexer, OR/XOR/CASCADE logic, a flip-flop, output select and enable, and logic array inputs.

Unused product terms are automatically disabled by the compiler to decrease power consumption. A security fuse, when programmed, protects the contents of the ATF1502ASV. Two bytes (16 bits) of User Signature are accessible to the user for purposes such as storing project name, part number, revision or date. The User Signature is accessible regardless of the state of the security fuse.

The ATF1502ASV device is an in-system programmable (ISP) device. It uses the industry standard 4-pin JTAG interface (IEEE Std. 1149.1), and is fully compliant with JTAG's Boundary-scan Description Language (BSDL). ISP allows the device to be programmed without removing it from

the printed circuit board. In addition to simplifying the manufacturing flow, ISP also allows design modifications to be made in the field via software.

**Figure 1-4.** ATF1502ASV Macrocell

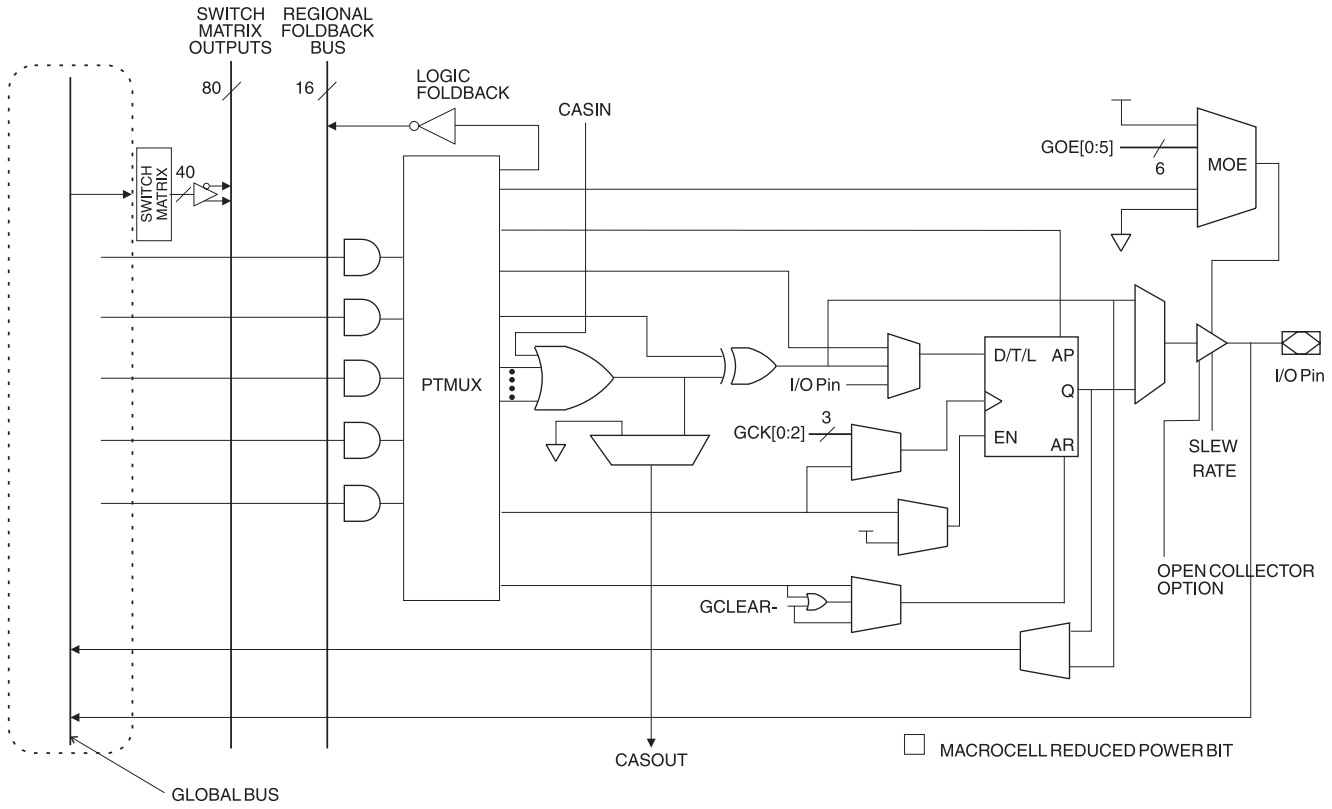


## 1.1 Product Terms and Select Mux

Each ATF1502ASV macrocell has five product terms. Each product term receives as its inputs all signals from both the global bus and regional bus.

The product term select multiplexer (PTMUX) allocates the five product terms as needed to the macrocell logic gates and control signals. The PTMUX programming is determined by the design compiler, which selects the optimum macrocell configuration.

## 1.2 OR/XOR/CASCADE Logic

The ATF1502ASV's logic structure is designed to efficiently support all types of logic. Within a single macrocell, all the product terms can be routed to the OR gate, creating a 5-input AND/OR sum term. With the addition of the CASIN from neighboring macrocells, this can be expanded to as many as 40 product terms with little additional delay.

The macrocell's XOR gate allows efficient implementation of compare and arithmetic functions. One input to the XOR comes from the OR sum term. The other XOR input can be a product term or a fixed high or low level. For combinatorial outputs, the fixed level input allows polarity selection. For registered functions, the fixed levels allow DeMorgan minimization of product terms. The XOR gate is also used to emulate T- and JK-type flip-flops.

### 1.3 Flip-flop

The ATF1502ASV's flip-flop has very flexible data and control functions. The data input can come from either the XOR gate, from a separate product term or directly from the I/O pin. Selecting the separate product term allows creation of a buried registered feedback within a combinatorial output macrocell. (This feature is automatically implemented by the fitter software). In addition to D, T, JK and SR operation, the flip-flop can also be configured as a flow-through latch. In this mode, data passes through when the clock is high and is latched when the clock is low.

The clock itself can be either one of the Global CLK signals (GCK[0 : 2]) or an individual product term. The flip-flop changes state on the clock's rising edge. When the GCK signal is used as the clock, one of the macrocell product terms can be selected as a clock enable. When the clock enable function is active and the enable signal (product term) is low, all clock edges are ignored. The flip-flop's asynchronous reset signal (AR) can be either the Global Clear (GCLEAR), a product term, or always off. AR can also be a logic OR of GCLEAR with a product term. The asynchronous preset (AP) can be a product term or always off.

### 1.4 Extra Feedback

The ATF1502ASV macrocell output can be selected as registered or combinatorial.The extra buried feedback signal can be either combinatorial or a registered signal regardless of whether the output is combinatorial or registered. (This enhancement function is automatically implemented by the fitter software.) Feedback of a buried combinatorial output allows the creation of a second latch within a macrocell.

### 1.5 I/O Control

The output enable multiplexer (MOE) controls the output enable signal. Each I/O can be individually configured as an input, output or for bi-directional operation. The output enable for each macrocell can be selected from the true or compliment of the two output enable pins, a subset of the I/O pins, or a subset of the I/O macrocells. This selection is automatically done by the fitter software when the I/O is configured as an input, all macrocell resources are still available, including the buried feedback, expander and cascade logic.

### 1.6 Global Bus/Switch Matrix

The global bus contains all input and I/O pin signals as well as the buried feedback signal from all 32 macrocells. The switch matrix in each logic block receives as its inputs all signals from the global bus. Under software control, up to 40 of these signals can be selected as inputs to the logic block.

### 1.7 Foldback Bus

Each macrocell also generates a foldback product term. This signal goes to the regional bus and is available to four macrocells. The foldback is an inverse polarity of one of the macrocell's product terms. The four foldback terms in each region allow generation of high fan-in sum terms (up to nine product terms) with little additional delay.

## 2. Programmable Pin-keeper Option for Inputs and I/Os

The ATF1502ASV offers the option of programming all input and I/O pins so that pin-keeper circuits can be utilized. When any pin is driven high or low and then subsequently left floating, it will stay at that previous high or low level. This circuitry prevents unused input and I/O lines from

floating to intermediate voltage levels, which causes unnecessary power consumption and system noise. The keeper circuits eliminate the need for external pull-up resistors and eliminate their DC power consumption.

**Figure 2-1.** Input Diagram

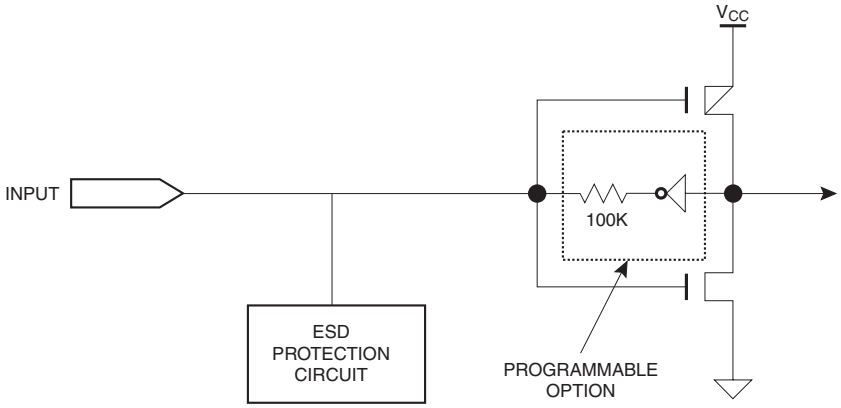


**Figure 2-2.** I/O Diagram

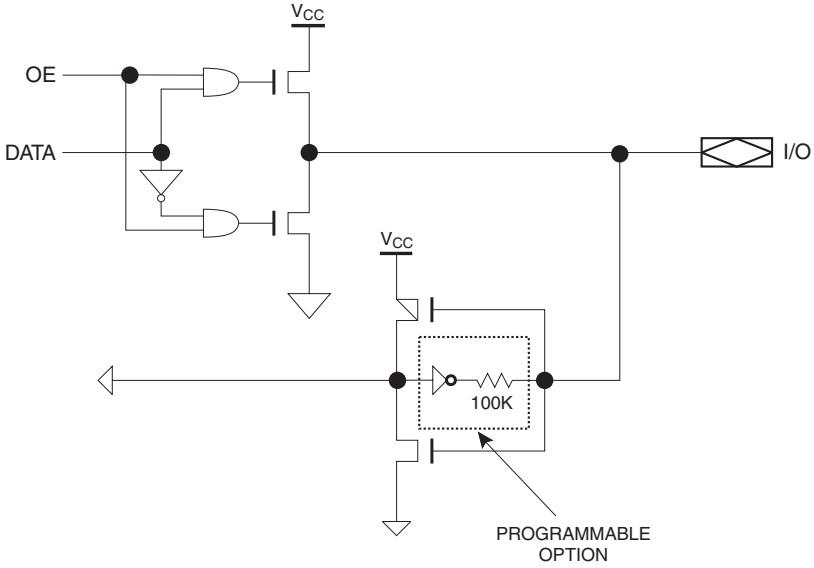


## 3. Speed/Power Management

The ATF1502ASV has several built-in speed and power management features.

To further reduce power, each ATF1502ASV macrocell has a reduced-power bit feature. To reduce power consumption this feature may be actived (by changing the default value of OFF to ON) for any or all macrocells.

The ATF1502ASV also has an optional power-down mode. In this mode, current drops to below 15 mA. When the power-down option is selected, either PD1 or PD2 pins (or both) can be used to power down the part. The power-down option is selected in the design source file. When enabled, the device goes into power-down when either PD1 or PD2 is high. In the power-down mode, all internal logic signals are latched and held, as are any enabled outputs.

All pin transitions are ignored until the PD pin is brought low. When the power-down feature is enabled, the PD1 or PD2 pin cannot be used as a logic input or output. However, the pin's macrocell may still be used to generate buried foldback and cascade logic signals.

All power-down AC characteristic parameters are computed from external input or I/O pins, with reduced-power bit turned on. For macrocells in reduced-power mode (reduced-power bit turned on), the reduced-power adder, $t_{RPA}$, must be added to the AC parameters, which include the data paths $t_{LAD}$, $t_{LAC}$, $t_{IC}$, $t_{ACL}$, $t_{ACH}$ and $t_{SEXP}$.

The ATF1502ASV macrocell also has an option whereby the power can be reduced on a per-macrocell basis. By enabling this power-down option, macrocells that are not used in an application can be turned down, thereby reducing the overall power consumption of the device.

Each output also has individual slew rate control. This may be used to reduce system noise by slowing down outputs that do not need to operate at maximum speed. Outputs default to slow switching, and may be specified as fast switching in the design file.

## 4. Power-up Reset

The ATF1502ASV is designed with a power-up reset, a feature critical for state machine initialization. At a point delayed slightly from $V_{CC}$ crossing $V_{RST}$, all registers will be initialized, and the state of each output will depend on the polarity of its buffer. However, due to the asynchronous nature of reset and uncertainty of how $V_{CC}$ actually rises in the system, the following conditions are required:

1. The $V_{CC}$ rise must be monotonic,
2. After reset occurs, all input and feedback setup times must be met before driving the clock pin high, and,
3. The clock must remain stable during $T_D$.

The ATF1502ASV has two options for the hysteresis about the reset level, $V_{RST}$, Small and Large. To ensure a robust operating environment in applications where the device is operated near 3.0V, Atmel recommends that during the fitting process users configure the device with the Power-up Reset hysteresis set to Large. For conversions, Atmel POF2JED users should include the flag "-power_reset" on the command line after "filename.POF". To allow the registers to be properly reinitialized with the Large hysteresis option selected, the following condition is added:

4. If $V_{CC}$ falls below 2.0V, it must shut off completely before the device is turned on again.

When the Large hysteresis option is active, $I_{CC}$ is reduced by several hundred microamps as well.

## 5. Security Fuse Usage

A single fuse is provided to prevent unauthorized copying of the ATF1502ASV fuse patterns. Once programmed, fuse verify is inhibited. However, the 16-bit User Signature remains accessible.

## 6. Programming

ATF1502ASV devices are in-system programmable (ISP) devices utilizing the 4-pin JTAG protocol. This capability eliminates package handling normally required for programming and facilitates rapid design iterations and field changes.

Atmel provides ISP hardware and software to allow programming of the ATF1502ASV via the PC. ISP is performed by using either a download cable, a comparable board tester or a simple microprocessor interface.

When using the ISP hardware or software to program the ATF1502ASV devices, four I/O pins must be reserved for the JTAG interface. However, the logic features that the macrocells have associated with these I/O pins are still available to the design for burned logic functions.

To facilitate ISP programming by the Automated Test Equipment (ATE) vendors. Serial Vector Format (SVF) files can be created by Atmel-provided software utilities.

ATF1502ASV devices can also be programmed using standard third-party programmers. With a third-party programmer, the JTAG ISP port can be disabled, thereby allowing four additional I/O pins to be used for logic.

Contact your local Atmel representatives or Atmel PLD applications for details.

### 6.1 ISP Programming Protection

The ATF1502ASV has a special feature that locks the device and prevents the inputs and I/O from driving if the programming process is interrupted for any reason. The inputs and I/O default to high-Z state during such a condition. In addition, the pin-keeper option preserves the previous state of the input and I/O PMS during programming.

All ATF1502ASV devices are initially shipped in the erased state, thereby making them ready to use for ISP.

Note: For more information refer to the “Designing for In-System Programmability with Atmel CPLDs” application note.

## 7. JTAG-BST/ISP Overview

The JTAG boundary-scan testing is controlled by the Test Access Port (TAP) controller in the ATF1502ASV. The boundary-scan technique involves the inclusion of a shift-register stage (contained in a boundary-scan cell) adjacent to each component so that signals at component boundaries can be controlled and observed using scan testing methods. Each input pin and I/O pin has its own boundary-scan cell (BSC) to support boundary-scan testing. The ATF1502ASV does not include a Test Reset (TRST) input pin because the TAP controller is automatically reset at power-up. The five JTAG modes supported include: SAMPLE/PRELOAD, EXTEST, BYPASS, IDCODE and HIGHZ. The ATF1502ASV’s ISP can be fully described using JTAG’s BSDL as described in IEEE Standard 1149.1b. This allows ATF1502ASV programming to be described and implemented using any one of the third-party development tools supporting this standard.

The ATF1502ASV has the option of using four JTAG-standard I/O pins for boundary-scan testing (BST) and in-system programming (ISP) purposes. The ATF1502ASV is programmable through the four JTAG pins using the IEEE standard JTAG programming protocol established by IEEE Standard 1149.1 using 5V TTL-level programming signals from the ISP interface for in-system programming. The JTAG feature is a programmable option. If JTAG (BST or ISP) is not needed, then the four JTAG control pins are available as I/O pins.

### 7.1 JTAG Boundary-scan Cell (BSC) Testing

The ATF1502ASV contains up to 32 I/O pins and four input pins, depending on the device type and package type selected. Each input pin and I/O pin has its own boundary-scan cell (BSC) in

order to support boundary-scan testing as described in detail by IEEE Standard 1149.1. A typical BSC consists of three capture registers or scan registers and up to two update registers. There are two types of BSCs, one for input or I/O pin, and one for the macrocells. The BSCs in the device are chained together through the capture registers. Input to the capture register chain is fed in from the TDI pin while the output is directed to the TDO pin. Capture registers are used to capture active device data signals, to shift data in and out of the device and to load data into the update registers. Control signals are generated internally by the JTAG TAP controller. The BSC configuration for the input and I/O pins and macrocells is shown below.

## 7.2 BSC Configuration for Input and I/O Pins (Except JTAG TAP Pins)

**Figure 7-1.** BSC Configuration for Input and I/O Pins (Except JTAG TAP Pins)

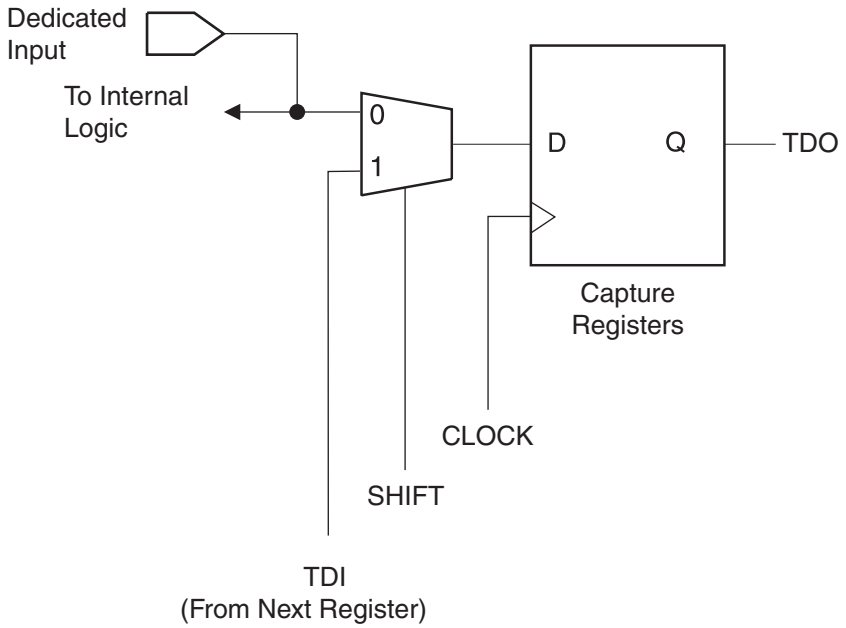


Note: The ATF1502ASV has a pull-up option on TMS and TDI pins. This feature is selected as a design option.

**Figure 7-2.** BSC Configuration for Macrocells

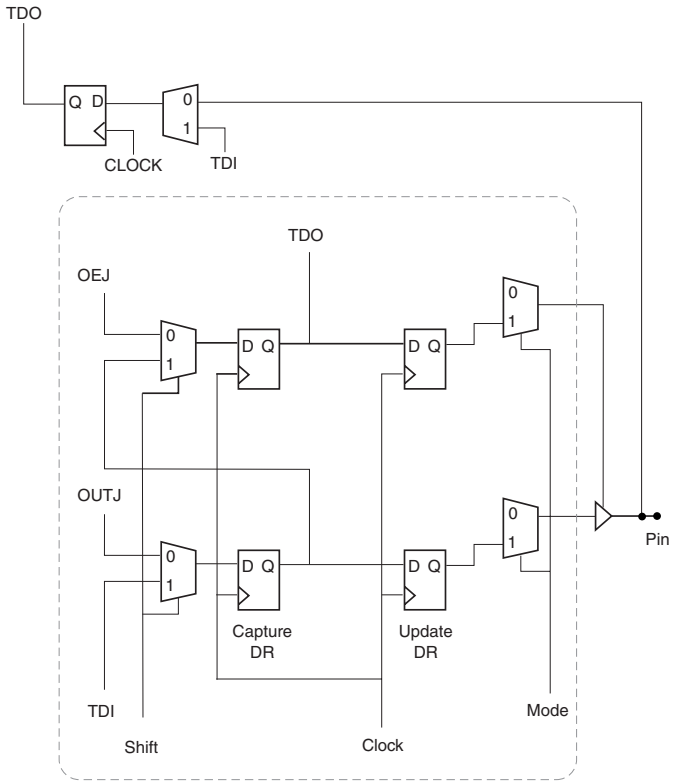


## 8. Design Software Support

ATF1502ASV designs are supported by several third-party tools. Automated fitters allow logic synthesis using a variety of high-level description languages and formats.

# 9. Electrical Specifications

**Table 9-1.** Absolute Maximum Ratings*

| | |
|---|---|
| Temperature Under Bias | -40°C to +85°C |
| Storage Temperature | -65°C to +150°C |
| Voltage on Any Pin with Respect to Ground | -2.0V to +7.0V(1) |
| Voltage on Input Pins with Respect to Ground During Programming | -2.0V to +14.0V(1) |
| Programming Voltage with Respect to Ground | -2.0V to +14.0V(1) |

*NOTICE: Stresses beyond those listed under "Absolute Maximum Ratings" may cause permanent damage to the device. This is a stress rating only and functional operation of the device at these or any other conditions beyond those indicated in the operational sections of this specification is not implied. Exposure to absolute maximum rating conditions for extended periods may affect device reliability.

Note: 1. Minimum voltage is -0.6V DC, which may undershoot to -2.0V for pulses of less than 20 ns. Maximum output pin voltage is $V_{CC}$ + 0.75V DC, which may overshoot to 7.0V for pulses of less than 20 ns.

**Table 9-2.** DC and AC Operating Conditions

| | Commercial | Industrial |
|---|---|---|
| Operating Temperature (Ambient) | 0°C - 70°C | -40°C - 85°C |
| $V_{CC}$ (3.3V) Power Supply | 3.0V – 3.6V | 3.0V – 3.6V |

**Table 9-3.** Pin Capacitance(1)

| | Typ | Max | Units | Conditions |
|---|---|---|---|---|
| $C_{IN}$ | 8 | 10 | pF | $V_{IN}$ = 0V; f = 1.0 MHz |
| $C_{I/O}$ | 8 | 10 | pF | $V_{OUT}$ = 0V; f = 1.0 MHz |

Note: 1. Typical values for nominal supply voltage. This parameter is only sampled and is not 100% tested. The OGI pin (high-voltage pin during programming) has a maximum capacitance of 12 pF.

**Table 9-4.** DC Characteristics

| Symbol | Parameter | Condition | | | Min | Typ | Max | Units |
|---|---|---|---|---|---|---|---|---|
| $I_{IL}$ | Input or I/O Low Leakage Current | $V_{IN} = V_{CC}$ | | | | -2 | -10 | µA |
| $I_{IH}$ | Input or I/O High Leakage Current | | | | | 2 | 10 | |
| $I_{OZ}$ | Tri-state Output Off-state Current | $V_O = V_{CC}$ or GND | | | -40 | | 40 | µA |
| $I_{CC1}$ | Power Supply Current, Standby | $V_{CC}$ = Max<br>$V_{IN}$ = 0, $V_{CC}$ | Std Mode | Com. | | 40 | | mA |
| | | | | Ind. | | 45 | | mA |
| $I_{CC2}$ | Power Supply Current, Power-down Mode | $V_{CC}$ = Max<br>$V_{IN}$ = 0, $V_{CC}$ | "PD" Mode | | | 0.75 | 5.0 | mA |
| $I_{CC3}$ (2) | Reduced-power Mode Supply Current, Standby | $V_{CC}$ = Max<br>$V_{IN}$ = 0, $V_{CC}$ | Std Mode | Com. | | 25 | | mA |
| | | | | Ind. | | 30 | | mA |
| $V_{IL}$ | Input Low Voltage | | | | -0.3 | | 0.8 | V |
| $V_{IH}$ | Input High Voltage | | | | 2.0 | | $V_{CCINT}$ + 0.3 | V |
| $V_{OL}$ | Output Low Voltage (TTL) | $V_{IN} = V_{IH}$ or $V_{IL}$<br>$V_{CC}$ = MIN, $I_{OL}$ = 8 mA | | Com. | | | 0.45 | V |
| | | | | Ind. | | | 0.45 | |
| | Output Low Voltage (CMOS) | $V_{IN} = V_{IH}$ or $V_{IL}$<br>$V_{CC}$ = MIN, $I_{OL}$ = 0.1 mA | | Com. | | | 0.2 | V |
| | | | | Ind. | | | 0.2 | V |
| $V_{OH}$ | Output High Voltage (TTL) | $V_{IN} = V_{IH}$ or $V_{IL}$<br>$V_{CC}$ = MIN, $I_{OH}$ = 2.0 mA | | | | 2.4 | | V |
| | Output High Voltage (CMOS) | $V_{IN} = V_{IH}$ or $V_{IL}$<br>$V_{CCIO}$ = MIN, $I_{OH}$ = -0.1 mA | | | $V_{CCIO}$ - 0.2 | | | |

Notes: 1. Not more than one output at a time should be shorted. Duration of short circuit test should not exceed 30 sec.
2. $I_{CC3}$ refers to the current in the reduced-power mode when macrocell reduced-power is turned on.

## 10. Timing Model

**Figure 10-1.** Timing Model

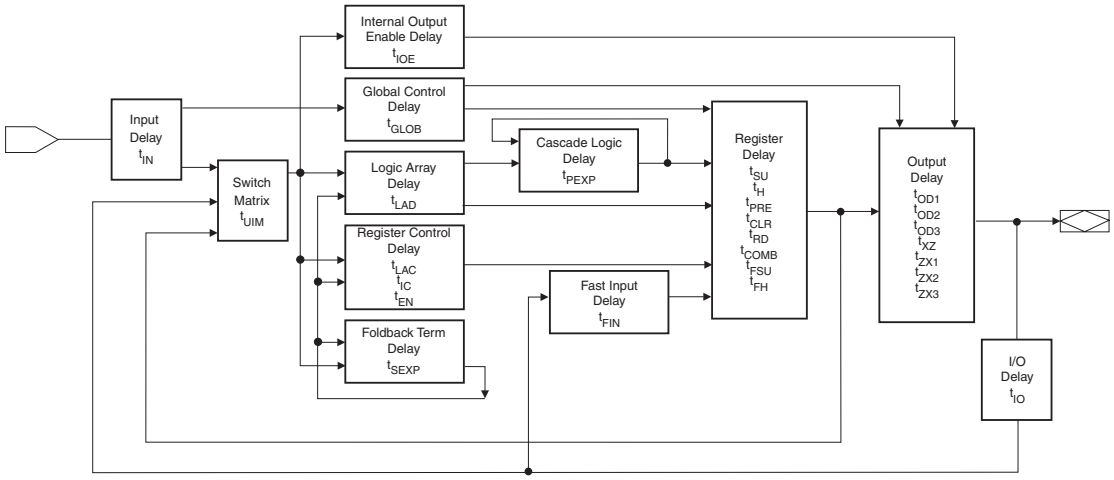


## 11. Input Test Waveforms and Measurement Levels

**Figure 11-1.** Input Test Waveforms and Measurement Levels

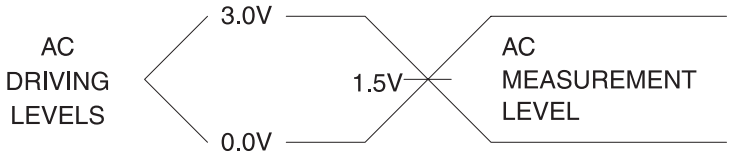


$t_R$, $t_F$ = 1.5 ns typical

## 12. Output AC Test Loads

**Figure 12-1.** Output AC Test Loads

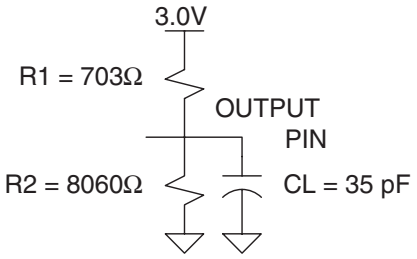

# 13. AC Characteristics

**Table 13-1.** AC Characteristics [1]

| Symbol | Parameter | -15 | | -20 | | Units |
|---|---|---|---|---|---|---|
| | | Min | Max | Min | Max | |
| $t_{PD1}$ | Input or Feedback to Non-registered Output | 3 | 15 | | 20 | ns |
| $t_{PD2}$ | I/O Input or Feedback to Non-registered Feedback | 3 | 12 | | 16 | ns |
| $t_{SU}$ | Global Clock Setup Time | 11 | | 16 | | ns |
| $t_{H}$ | Global Clock Hold Time | 0 | | 0 | | ns |
| $t_{FSU}$ | Global Clock Setup Time of Fast Input | 3 | | 3 | | ns |
| $t_{FH}$ | Global Clock Hold Time of Fast Input | 1 | | 1.5 | | MHz |
| $t_{COP}$ | Global Clock to Output Delay | | 8 | | 10 | ns |
| $t_{CH}$ | Global Clock High Time | 5 | | 6 | | ns |
| $t_{CL}$ | Global Clock Low Time | 5 | | 6 | | ns |
| $t_{ASU}$ | Array Clock Setup Time | 4 | | 4 | | ns |
| $t_{AH}$ | Array Clock Hold Time | 4 | | 5 | | ns |
| $t_{ACOP}$ | Array Clock Output Delay | | 15 | | 20 | ns |
| $t_{ACH}$ | Array Clock High Time | 6 | | 8 | | ns |
| $t_{ACL}$ | Array Clock Low Time | 6 | | 8 | | ns |
| $t_{CNT}$ | Minimum Clock Global Period | | 13 | | 16 | ns |
| $f_{CNT}$ | Maximum Internal Global Clock Frequency | 76.9 | | 66 | | MHz |
| $t_{ACNT}$ | Minimum Array Clock Period | | 13 | | 16 | ns |
| $f_{ACNT}$ | Maximum Internal Array Clock Frequency | 76.9 | | 66 | | MHz |
| $f_{MAX}$ | Maximum Clock Frequency | 100 | | 83.3 | | MHz |
| $t_{IN}$ | Input Pad and Buffer Delay | | 2 | | 2 | ns |
| $t_{IO}$ | I/O Input Pad and Buffer Delay | | 2 | | 2 | ns |
| $t_{FIN}$ | Fast Input Delay | | 2 | | 2 | ns |
| $t_{SEXP}$ | Foldback Term Delay | | 8 | | 10 | ns |
| $t_{PEXP}$ | Cascade Logic Delay | | 1 | | 1 | ns |
| $t_{LAD}$ | Logic Array Delay | | 6 | | 7 | ns |
| $t_{LAC}$ | Logic Control Delay | | 6 | | 7 | ns |
| $t_{IOE}$ | Internal Output Enable Delay | | 3 | | 3 | ns |
| $t_{OD1}$ | Output Buffer and Pad Delay (Slow slew rate = OFF; $V_{CC}$ = 3.3V; $C_L$ = 35 pF) | | 5 | | 5 | ns |
| $t_{ZX1}$ | Output Buffer Enable Delay (Slow slew rate = OFF; $V_{CCIO}$ = 5.0V; $C_L$ = 35 pF) | | 7 | | 9 | ns |
| $t_{ZX2}$ | Output Buffer Enable Delay (Slow slew rate = OFF; $V_{CCIO}$ = 3.3V; $C_L$ = 35 pF) | | 7 | | 9 | ns |

**Table 13-1.** AC Characteristics (Continued)[1]

| Symbol | Parameter | -15 | | -20 | | Units |
|---|---|---|---|---|---|---|
| | | Min | Max | Min | Max | |
| $t_{ZX3}$ | Output Buffer Enable Delay (Slow slew rate = ON; $V_{CCIO}$ = 5.0V/3.3V; $C_L$ = 35 pF) | | 10 | | 11 | ns |
| $t_{XZ}$ | Output Buffer Disable Delay ($C_L$ = 5 pF) | | 6 | | 7 | ns |
| $t_{SU}$ | Register Setup Time | 4 | | 5 | | ns |
| $t_H$ | Register Hold Time | 4 | | 5 | | ns |
| $t_{FSU}$ | Register Setup Time of Fast Input | 2 | | 2 | | ns |
| $t_{FH}$ | Register Hold Time of Fast Input | 2 | | 2 | | ns |
| $t_{RD}$ | Register Delay | | 1 | | 2 | ns |
| $t_{COMB}$ | Combinatorial Delay | | 1 | | 2 | ns |
| $t_{IC}$ | Array Clock Delay | | 6 | | 7 | ns |
| $t_{EN}$ | Register Enable Time | | 6 | | 7 | ns |
| $t_{GLOB}$ | Global Control Delay | | 1 | | 1 | ns |
| $t_{PRE}$ | Register Preset Time | | 4 | | 5 | ns |
| $t_{CLR}$ | Register Clear Time | | 4 | | 5 | ns |
| $t_{UIM}$ | Switch Matrix Delay | | 2 | | 2 | ns |
| $t_{RPA}$ | Reduced-power Adder[2] | | 13 | | 14 | ns |

Notes: 1. See ordering information for valid part numbers.

# 14. Power-down Mode

The ATF1502ASV includes an optional pin-controlled power-down feature. When this mode is enabled, the PD pin acts as the power-down pin. When the PD pin is high, the device supply current is reduced to less than 3 mA. During power-down, all output data and internal logic states are latched and held. Therefore, all registered and combinatorial output data remain valid. Any outputs that were in a high-Z state at the onset will remain at high-Z. During power-down, all input signals except the power-down pin are blocked. Input and I/O hold latches remain active to ensure that pins do not float to indeterminate levels, further reducing system power. The power-down pin feature is enabled in the logic design file. Designs using the power-down pin may not use the PD pin logic array input. However, all other PD pin macrocell resources may still be used, including the buried feedback and foldback product term array inputs.

**Table 14-1.** Power-down AC Characteristics[1][2]

| Symbol | Parameter | -15 | | -20 | | Units |
|---|---|---|---|---|---|---|
| | | Min | Max | Min | Max | |
| $t_{IVDH}$ | Valid I, I/O before PD High | 15 | | 20 | | ns |
| $t_{GVDH}$ | Valid OE[2] before PD High | 15 | | 20 | | ns |
| $t_{CVDH}$ | Valid Clock[2] before PD High | 15 | | 20 | | ns |
| $t_{DHIX}$ | I, I/O Don't Care after PD High | | 25 | | 30 | ns |
| $t_{DHGX}$ | OE[2] Don't Care after PD High | | 25 | | 30 | ns |
| $t_{DHCX}$ | Clock[2] Don't Care after PD High | | 25 | | 30 | ns |
| $t_{DLIV}$ | PD Low to Valid I, I/O | | 1 | | 1 | µs |
| $t_{DLGV}$ | PD Low to Valid OE[2] | | 1 | | 1 | µs |
| $t_{DLCV}$ | PD Low to Valid Clock[2] | | 1 | | 1 | µs |
| $t_{DLOV}$ | PD Low to Valid Output | | 1 | | 1 | µs |

Notes: 1. For slow slew outputs, add $t_{SSO}$.
2. Pin or product term.

## 15. ATF1502ASV Dedicated Pinouts

**Figure 15-1.** ATF1502ASV Dedicated Pinouts

| Dedicated Pin | 44-lead TQFP | 44-lead J-lead |
|---|---|---|
| INPUT/OE2/GCLK2 | 40 | 2 |
| INPUT/GCLR | 39 | 1 |
| INPUT/OE1 | 38 | 44 |
| INPUT/GCLK1 | 37 | 43 |
| I/O / GCLK3 | 35 | 41 |
| I/O / PD (1,2) | 5, 19 | 11, 25 |
| I/O / TDI (JTAG) | 1 | 7 |
| I/O / TMS (JTAG) | 7 | 13 |
| I/O / TCK (JTAG) | 26 | 32 |
| I/O / TDO (JTAG) | 32 | 38 |
| GND | 4, 16, 24, 36 | 10, 22, 30, 42 |
| $V_{CCI}$ | 9, 17, 29, 41 | 3, 15, 23, 35 |
| # of Signal Pins | 36 | 36 |
| # User I/O Pins | 32 | 32 |

| | |
|---|---|
| OE (1, 2) | Global OE pins |
| GCLR | Global Clear pin |
| GCLK (1, 2, 3) | Global Clock pins |
| PD (1, 2) | Power-down pins |
| TDI, TMS, TCK, TDO | JTAG pins used for boundary-scan testing or in-system programming |
| GND | Ground pins |
| $V_{CCI}$ | VCC pins for the device (+3.3V) |

**Figure 15-2.** ATF1502ASV I/O Pinouts

| MC | PLC | 44-lead PLCC | 44-lead TQFP |
|---|---|---|---|
| 1 | A | 4 | 42 |
| 2 | A | 5 | 43 |
| 3 | A | 6 | 44 |
| 4/**TDI** | A | 7 | 1 |
| 5 | A | 8 | 2 |
| 6 | A | 9 | 3 |
| 7/**PD1** | A | 11 | 5 |
| 8 | A | 12 | 6 |
| 9/**TMS** | A | 13 | 7 |
| 10 | A | 14 | 8 |
| 11 | A | 16 | 10 |
| 12 | A | 17 | 11 |
| 13 | A | 18 | 12 |
| 14 | A | 19 | 13 |
| 15 | A | 20 | 14 |
| 16 | A | 21 | 15 |
| 17 | B | 41 | 35 |
| 18 | B | 40 | 34 |
| 19 | B | 39 | 33 |
| 20/**TDO** | B | 38 | 32 |
| 21 | B | 37 | 31 |
| 22 | B | 36 | 30 |
| 23 | B | 34 | 28 |
| 24 | B | 33 | 27 |
| 25/**TCK** | B | 32 | 26 |
| 26 | B | 31 | 25 |
| 27 | B | 29 | 23 |
| 28 | B | 28 | 22 |
| 29 | B | 27 | 21 |
| 30 | B | 26 | 20 |
| 31/**PD2** | B | 25 | 19 |
| 32 | B | 24 | 18 |

**SUPPLY CURRENT VS. SUPPLY VOLTAGE**
**ASV VERSION ($T_A$ = 25°C, F = 0)**

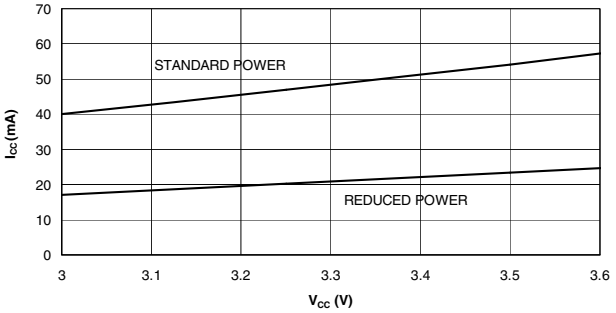


**OUTPUT SOURCE CURRENT VS. SUPPLY VOLTAGE**
**($V_{OH}$ = 2.4V, $T_A$ = 25°C)**

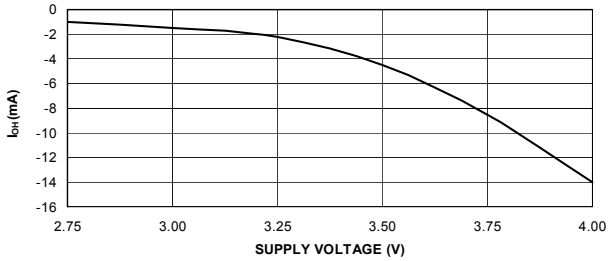


**SUPPLY CURRENT VS. SUPPLY VOLTAGE**
**PIN-CONTROLLED POWER-DOWN MODE ($T_A$ = 25°C, F = 0)**

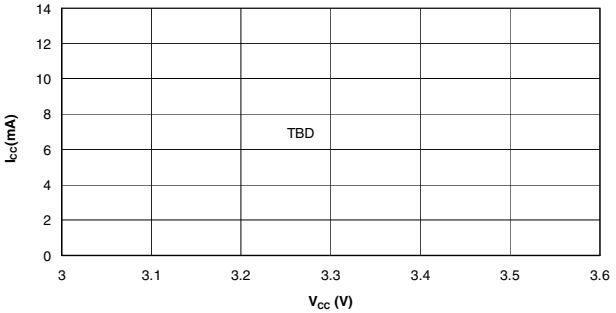


**SUPPLY CURRENT VS. SUPPLY VOLTAGE**
**ASVL (LOW-POWER) VERSION ($T_A$ = 25°C, F = 0)**

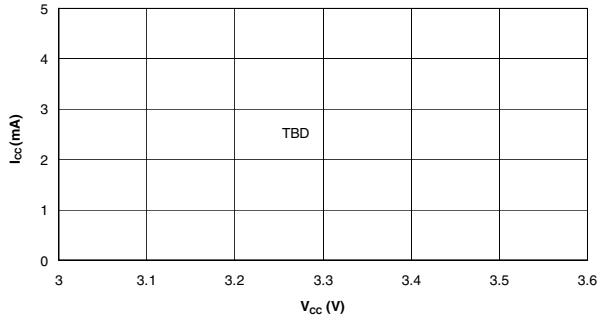


**SUPPLY CURRENT VS. FREQUENCY**
**ASV VERSION ($T_A$ = 25°C)**

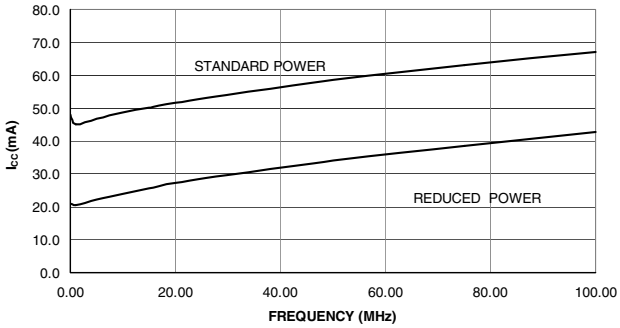


**SUPPLY CURRENT VS. FREQUENCY**
**ASVL (LOW POWER) VERSION ($T_A$ = 25°C)**

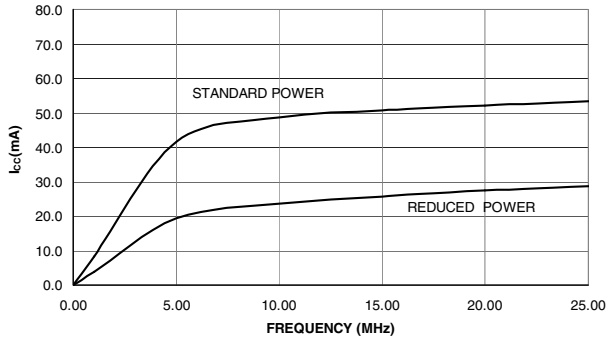

**OUTPUT SOURCE CURRENT VS. OUTPUT VOLTAGE**
**($V_{CC}$ = 3.3V, $T_A$ = 25°C)**

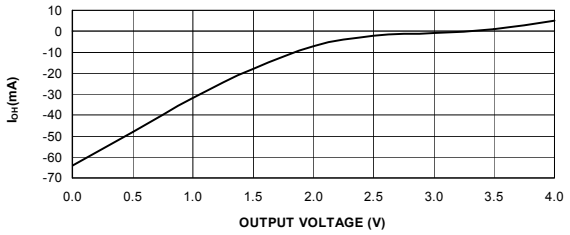


**OUTPUT SINK CURRENT VS. OUTPUT VOLTAGE**
**($V_{CC}$ = 3.3V, $T_A$ = 25°C)**

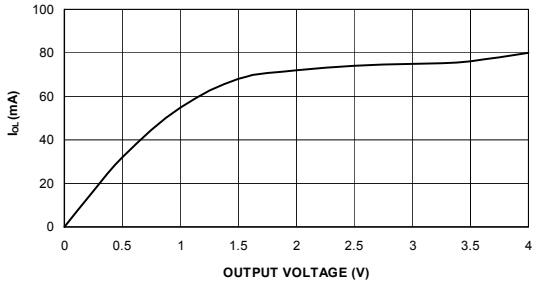


**OUTPUT SINK CURRENT VS. SUPPLY VOLTAGE**
**($V_{OL}$ = 0.5V, $T_A$ = 25°C)**

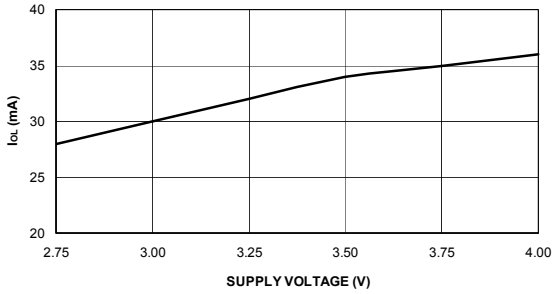


**INPUT CURRENT VS. INPUT VOLTAGE**
**($V_{CC}$ = 3.3V, $T_A$ = 25°C)**

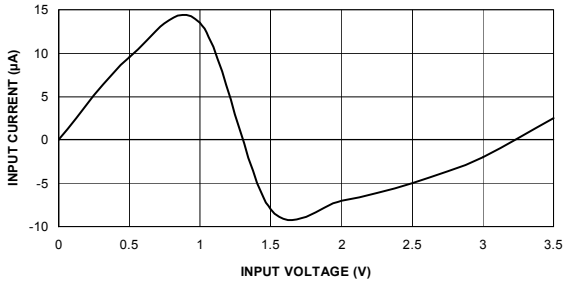


**INPUT CLAMP CURRENT VS. INPUT VOLTAGE**
**($V_{CC}$ = 3.3V, $T_A$ = 25°C)**

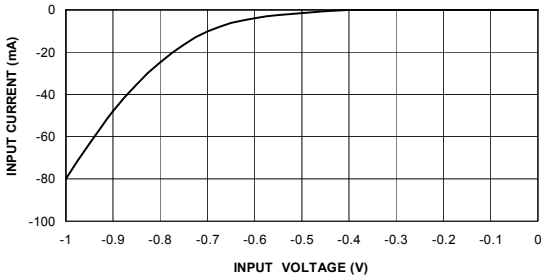

# 16. Ordering Information

## 16.1 Standard Package Options

| $t_{PD}$ (ns) | $t_{CO1}$ (ns) | $f_{MAX}$ (MHz) | Ordering Code | Package | Operation Range |
|---|---|---|---|---|---|
| 15 | 8 | 100 | ATF1502ASV-15AC44<br>ATF1502ASV-15JC44 | 44A<br>44J | Commercial<br>(0°C to 70°C) |
| 15 | 8 | 100 | ATF1502ASV-15AI44<br>ATF1502ASV-15JI44 | 44A<br>44J | Industrial<br>(-40°C to +85°C) |
| 20 | 12 | 83.3 | ATF1502ASV-20AC44<br>ATF1502ASV-20JC44 | 44A<br>44J | Commercial<br>(0°C to 70°C) |
| 20 | 12 | 83.3 | ATF1502ASV-20AI44<br>ATF1502ASV-20JI44 | 44A<br>44J | Industrial<br>(-40°C to +85°C) |

Notes: 1. The last-time buy date was September 30, 2005 for shaded parts.

2. In 2004, Atmel briefly offered lead-free ATF1502ASV-15JJ44. This part is now discontinued and replaced by ATF1502ASV-15JU44, which is both lead- and Halide-free.

## 16.2 Green Package Options (Pb/Halide-free/RoHS Compliant)

| $t_{PD}$ (ns) | $t_{CO1}$ (ns) | $f_{MAX}$ (MHz) | Ordering Code | Package | Operation Range |
|---|---|---|---|---|---|
| 15 | 8 | 100 | ATF1502ASV-15AU44<br>ATF1502ASV-15JU44 | 44A<br>44J | Industrial<br>(-40°C to +85°C) |

## 16.3 Using “C” Product for Industrial

There is very little risk in using “C” devices for industrial applications because the $V_{CC}$ conditions for 3.3V products are the same for commercial and industrial (there is only 15°C difference at the high end of the temperature range). To use commercial product for industrial temperature ranges, de-rate $I_{CC}$ by 15%.

| Package Type | |
|---|---|
| **44A** | 44-lead, Thin Plastic Gull Wing Quad Flatpack (TQFP) |
| **44J** | 44-lead, Plastic J-leaded Chip Carrier OTP (PLCC) |

# 17. Packaging Information

## 17.1 44A – TQFP

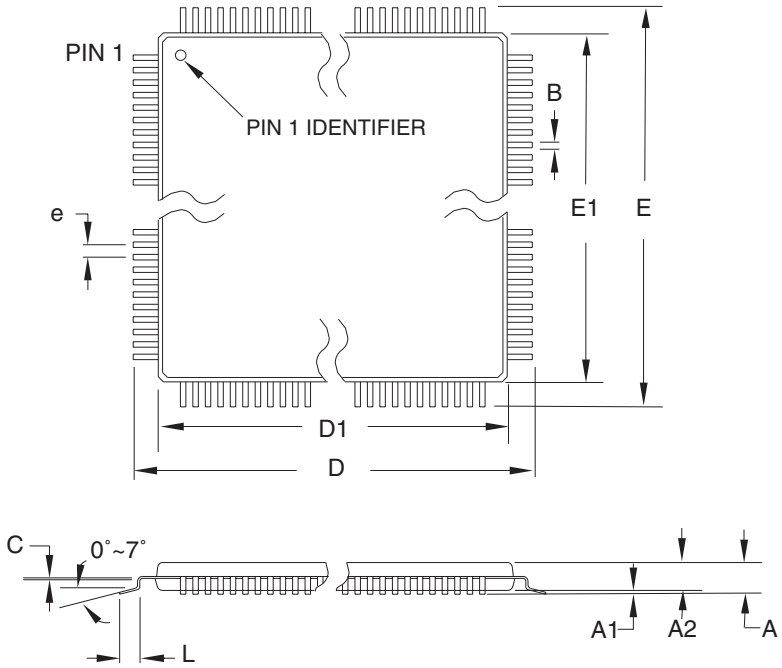


**COMMON DIMENSIONS**
(Unit of Measure = mm)

| SYMBOL | MIN | NOM | MAX | NOTE |
|---|---|---|---|---|
| A | – | – | 1.20 | |
| A1 | 0.05 | – | 0.15 | |
| A2 | 0.95 | 1.00 | 1.05 | |
| D | 11.75 | 12.00 | 12.25 | |
| D1 | 9.90 | 10.00 | 10.10 | Note 2 |
| E | 11.75 | 12.00 | 12.25 | |
| E1 | 9.90 | 10.00 | 10.10 | Note 2 |
| B | 0.30 | – | 0.45 | |
| C | 0.09 | – | 0.20 | |
| L | 0.45 | – | 0.75 | |
| e | 0.80 TYP | | | |

Notes:
1. This package conforms to JEDEC reference MS-026, Variation ACB.
2. Dimensions D1 and E1 do not include mold protrusion. Allowable protrusion is 0.25 mm per side. Dimensions D1 and E1 are maximum plastic body size dimensions including mold mismatch.
3. Lead coplanarity is 0.10 mm maximum.

10/5/2001

| | TITLE | DRAWING NO. | REV. |
|---|---|---|---|
| ATMEL 2325 Orchard Parkway San Jose, CA 95131 | **44A,** 44-lead, 10 x 10 mm Body Size, 1.0 mm Body Thickness, 0.8 mm Lead Pitch, Thin Profile Plastic Quad Flat Package (TQFP) | 44A | B |

## 17.2 44J – PLCC

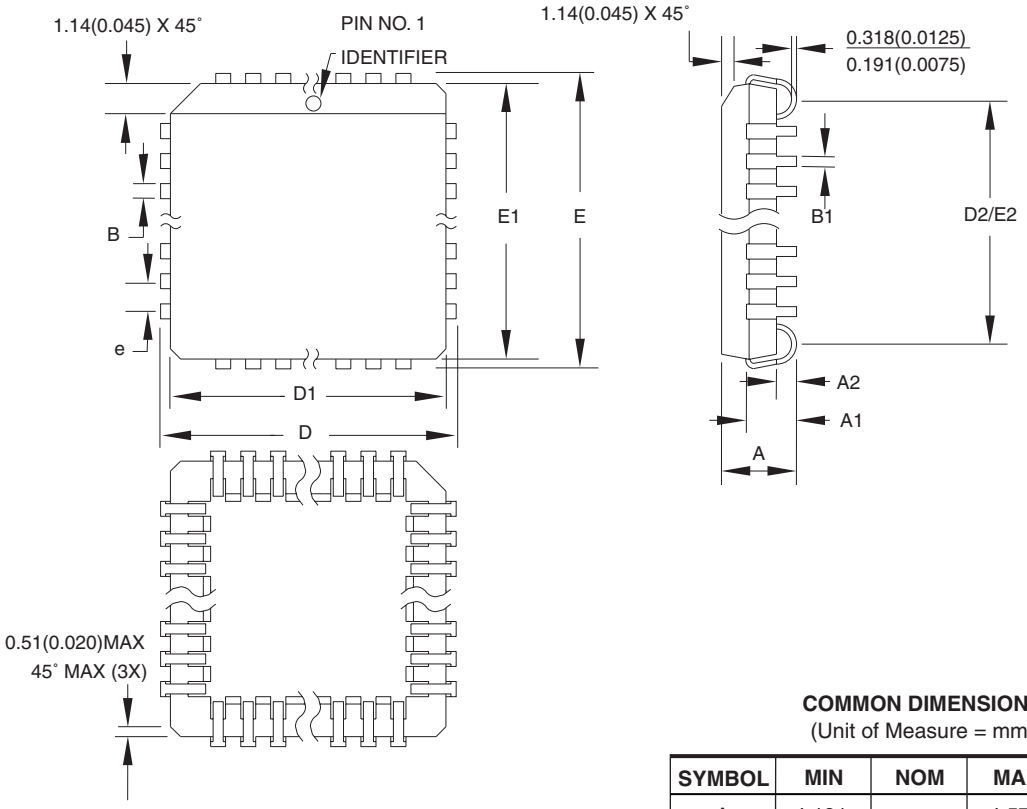


**COMMON DIMENSIONS**
(Unit of Measure = mm)

| SYMBOL | MIN | NOM | MAX | NOTE |
|---|---|---|---|---|
| A | 4.191 | – | 4.572 | |
| A1 | 2.286 | – | 3.048 | |
| A2 | 0.508 | – | – | |
| D | 17.399 | – | 17.653 | |
| D1 | 16.510 | – | 16.662 | Note 2 |
| E | 17.399 | – | 17.653 | |
| E1 | 16.510 | – | 16.662 | Note 2 |
| D2/E2 | 14.986 | – | 16.002 | |
| B | 0.660 | – | 0.813 | |
| B1 | 0.330 | – | 0.533 | |
| e | 1.270 TYP | | | |

Notes:
1. This package conforms to JEDEC reference MS-018, Variation AC.
2. Dimensions D1 and E1 do not include mold protrusion. Allowable protrusion is .010"(0.254 mm) per side. Dimension D1 and E1 include mold mismatch and are measured at the extreme material condition at the upper or lower parting line.
3. Lead coplanarity is 0.004" (0.102 mm) maximum.

10/04/01

| | TITLE | DRAWING NO. | REV. |
|---|---|---|---|
| 2325 Orchard Parkway<br>San Jose, CA 95131 | **44J**, 44-lead, Plastic J-leaded Chip Carrier (PLCC) | 44J | B |

## 17.3 Revision History

| Version Number/Release Date | Comments |
|---|---|
| Revision I – June 2005 | Added Green package options |
| Revision J – January 2006 | Updated ATF1502ASV-15JC44 to last-time buy status |

## Atmel Corporation

2325 Orchard Parkway
San Jose, CA 95131, USA
Tel: 1(408) 441-0311
Fax: 1(408) 487-2600

## Regional Headquarters

*Europe*
Atmel Sarl
Route des Arsenaux 41
Case Postale 80
CH-1705 Fribourg
Switzerland
Tel: (41) 26-426-5555
Fax: (41) 26-426-5500

*Asia*
Room 1219
Chinachem Golden Plaza
77 Mody Road Tsimshatsui
East Kowloon
Hong Kong
Tel: (852) 2721-9778
Fax: (852) 2722-1369

*Japan*
9F, Tonetsu Shinkawa Bldg.
1-24-8 Shinkawa
Chuo-ku, Tokyo 104-0033
Japan
Tel: (81) 3-3523-3551
Fax: (81) 3-3523-7581

## Atmel Operations

*Memory*
2325 Orchard Parkway
San Jose, CA 95131, USA
Tel: 1(408) 441-0311
Fax: 1(408) 436-4314

*Microcontrollers*
2325 Orchard Parkway
San Jose, CA 95131, USA
Tel: 1(408) 441-0311
Fax: 1(408) 436-4314

La Chantrerie
BP 70602
44306 Nantes Cedex 3, France
Tel: (33) 2-40-18-18-18
Fax: (33) 2-40-18-19-60

*ASIC/ASSP/Smart Cards*
Zone Industrielle
13106 Rousset Cedex, France
Tel: (33) 4-42-53-60-00
Fax: (33) 4-42-53-60-01

1150 East Cheyenne Mtn. Blvd.
Colorado Springs, CO 80906, USA
Tel: 1(719) 576-3300
Fax: 1(719) 540-1759

Scottish Enterprise Technology Park
Maxwell Building
East Kilbride G75 0QR, Scotland
Tel: (44) 1355-803-000
Fax: (44) 1355-242-743

*RF/Automotive*
Theresienstrasse 2
Postfach 3535
74025 Heilbronn, Germany
Tel: (49) 71-31-67-0
Fax: (49) 71-31-67-2340

1150 East Cheyenne Mtn. Blvd.
Colorado Springs, CO 80906, USA
Tel: 1(719) 576-3300
Fax: 1(719) 540-1759

*Biometrics/Imaging/Hi-Rel MPU/*
*High Speed Converters/RF Datacom*
Avenue de Rochepleine
BP 123
38521 Saint-Egreve Cedex, France
Tel: (33) 4-76-58-30-00
Fax: (33) 4-76-58-34-80


*Literature Requests*
www.atmel.com/literature


**Disclaimer:** The information in this document is provided in connection with Atmel products. No license, express or implied, by estoppel or otherwise, to any intellectual property right is granted by this document or in connection with the sale of Atmel products. **EXCEPT AS SET FORTH IN ATMEL'S TERMS AND CONDITIONS OF SALE LOCATED ON ATMEL'S WEB SITE, ATMEL ASSUMES NO LIABILITY WHATSOEVER AND DISCLAIMS ANY EXPRESS, IMPLIED OR STATUTORY WARRANTY RELATING TO ITS PRODUCTS INCLUDING, BUT NOT LIMITED TO, THE IMPLIED WARRANTY OF MERCHANTABILITY, FITNESS FOR A PARTICULAR PURPOSE, OR NON-INFRINGEMENT. IN NO EVENT SHALL ATMEL BE LIABLE FOR ANY DIRECT, INDIRECT, CONSEQUENTIAL, PUNITIVE, SPECIAL OR INCIDENTAL DAMAGES (INCLUDING, WITHOUT LIMITATION, DAMAGES FOR LOSS OF PROFITS, BUSINESS INTERRUPTION, OR LOSS OF INFORMATION) ARISING OUT OF THE USE OR INABILITY TO USE THIS DOCUMENT, EVEN IF ATMEL HAS BEEN ADVISED OF THE POSSIBILITY OF SUCH DAMAGES.** Atmel makes no representations or warranties with respect to the accuracy or completeness of the contents of this document and reserves the right to make changes to specifications and product descriptions at any time without notice. Atmel does not make any commitment to update the information contained herein. Unless specifically provided otherwise, Atmel products are not suitable for, and shall not be used in, automotive applications. Atmel's products are not intended, authorized, or warranted for use as components in applications intended to support or sustain life.

**© Atmel Corporation 2005**. **All rights reserved.** Atmel®, logo and combinations thereof, Everywhere You Are® and others, are registered trademarks or trademarks of Atmel Corporation or its subsidiaries. Other terms and product names may be trademarks of others.



Printed on recycled paper.

1615J–PLD–01/06

# OCEAN CHIPS
## Океан Электроники
### Поставка электронных компонентов

Компания «Океан Электроники» предлагает заключение долгосрочных отношений при поставках импортных электронных компонентов на взаимовыгодных условиях!

Наши преимущества:

- Поставка оригинальных импортных электронных компонентов напрямую с производств Америки, Европы и Азии, а так же с крупнейших складов мира;
- Широкая линейка поставок активных и пассивных импортных электронных компонентов (более 30 млн. наименований);
- Поставка сложных, дефицитных, либо снятых с производства позиций;
- Оперативные сроки поставки под заказ (от 5 рабочих дней);
- Экспресс доставка в любую точку России;
- Помощь Конструкторского Отдела и консультации квалифицированных инженеров;
- Техническая поддержка проекта, помощь в подборе аналогов, поставка прототипов;
- Поставка электронных компонентов под контролем ВП;
- Система менеджмента качества сертифицирована по Международному стандарту ISO 9001;
- При необходимости вся продукция военного и аэрокосмического назначения проходит испытания и сертификацию в лаборатории (по согласованию с заказчиком);
- Поставка специализированных компонентов военного и аэрокосмического уровня качества (Xilinx, Altera, Analog Devices, Intersil, Interpoint, Microsemi, Actel, Aeroflex, Peregrine, VPT, Syfer, Eurofarad, Texas Instruments, MS Kennedy, Miteq, Cobham, E2V, MA-COM, Hittite, Mini-Circuits, General Dynamics и др.);

Компания «Океан Электроники» является официальным дистрибьютором и эксклюзивным представителем в России одного из крупнейших производителей разъемов военного и аэрокосмического назначения **«JONHON»**, а так же официальным дистрибьютором и эксклюзивным представителем в России производителя высокотехнологичных и надежных решений для передачи СВЧ сигналов **«FORSTAR»**.

AVIC JONHON

**«JONHON»** (основан в 1970 г.)

Разъемы специального, военного и аэрокосмического назначения:

(Применяются в военной, авиационной, аэрокосмической, морской, железнодорожной, горно- и нефтедобывающей отраслях промышленности)

**«FORSTAR»** (основан в 1998 г.)

ВЧ соединители, коаксиальные кабели, кабельные сборки и микроволновые компоненты:

(Применяются в телекоммуникациях гражданского и специального назначения, в средствах связи, РЛС, а так же военной, авиационной и аэрокосмической отраслях промышленности).

FORSTAR®

Телефон: 8 (812) 309-75-97 (многоканальный)
Факс: 8 (812) 320-03-32
Электронная почта: ocean@oceanchips.ru
Web: http://oceanchips.ru/
Адрес: 198099, г. Санкт-Петербург, ул. Калинина, д. 2, корп. 4, лит. А