OMRON

Ultracompact, Ultrathin Photoelectric Sensor with Built-in Amplifier

E3T

The Improved E3T Series with Easier, Smoother Mounting and Installation

- Newly added Through-beam, Long-distance (2 m) Sensors (E3T-ST3□).
- Easy installation with M3-mounting Sensors (E3T-ST□□M, E3T-FD□□M, and E3T-SL□□M).
- Small Cylindrical Sensors for one-point mounting also added to the Series. (E3T-C□□□(S)).

⚠ Be sure to read *Safety Precautions* on page 13.

CE

Lineup Overview

Appearance		Sensing method	Through-beam	Retro-reflective	Diffuse-reflective	Convergent-reflective	BGS-reflective
Rectangular type	Side-view	M2-mounting	●	●	---	●	---
		NEW M3-mounting	●	---	---	●	---
	Flat	M2-mounting	●	---	●	---	●
		NEW M3-mounting	---	---	●	---	---
NEW Cylindrical type	Top-view	---	●	---	●	---	---
	Side-view	---	●	---	---	---	---

Ordering Information

Sensors [Refer to Dimensions on page 14.]

Red light Infrared light

M2-mounting Sensors

A set of mounting screws is included with the Sensor.

Sensing method	Appearance	Sensing distance	Operation mode	Model	
				NPN output	PNP output
Through-beam (Emitter + Receiver)*2		2 m (Sensitivity Adjustment Unit can be used.)	Light-ON	E3T-ST31 2M NEW	E3T-ST33 2M NEW
			Dark-ON	E3T-ST32 2M NEW	E3T-ST34 2M NEW
		1 m (Sensitivity Adjustment Unit can be used.)	Light-ON	E3T-ST11 2M	E3T-ST13 2M
			Dark-ON	E3T-ST12 2M	E3T-ST14 2M
		300 mm	Light-ON	E3T-ST21 2M	E3T-ST23 2M
			Dark-ON	E3T-ST22 2M	E3T-ST24 2M
		500 mm	Light-ON	E3T-FT11 2M	E3T-FT13 2M
			Dark-ON	E3T-FT12 2M	E3T-FT14 2M
		300 mm	Light-ON	E3T-FT21 2M	E3T-FT23 2M
			Dark-ON	E3T-FT22 2M	E3T-FT24 2M
Retro-reflective		Using the E39-R4 Reflector provided 200 mm [30 mm] *1	Light-ON	E3T-SR41 2M*3	E3T-SR43 2M*3
		Using the E39-R37-CA 100 mm [10 mm] *1	Dark-ON	E3T-SR42 2M*3	E3T-SR44 2M*3
Diffuse-reflective		5 to 30 mm	Light-ON	E3T-FD11 2M	E3T-FD13 2M
			Dark-ON	E3T-FD12 2M	E3T-FD14 2M
Convergent-reflective		5 to 15 mm	Light-ON	E3T-SL11 2M	E3T-SL13 2M
			Dark-ON	E3T-SL12 2M	E3T-SL14 2M
		5 to 30 mm	Light-ON	E3T-SL21 2M	E3T-SL23 2M
			Dark-ON	E3T-SL22 2M	E3T-SL24 2M
BGS-reflective		1 to 15 mm	Light-ON	E3T-FL11 2M	E3T-FL13 2M
			Dark-ON	E3T-FL12 2M	E3T-FL14 2M
		1 to 30 mm	Light-ON	E3T-FL21 2M	E3T-FL23 2M
			Dark-ON	E3T-FL22 2M	E3T-FL24 2M

M3-mounting Sensors NEW

A set of mounting screws is not included with the Sensor. Order a Screw Set separately if required.

Sensing method	Appearance	Sensing distance	Operation mode	Model	
				NPN output	PNP output
Through-beam (Emitter + Receiver)*2		1 m	Light-ON	E3T-ST11M 2M	E3T-ST13M 2M
			Dark-ON	E3T-ST12M 2M	E3T-ST14M 2M
		300 mm	Light-ON	E3T-ST21M 2M	E3T-ST23M 2M
			Dark-ON	E3T-ST22M 2M	E3T-ST24M 2M
Diffuse-reflective	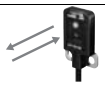	5 to 30 mm	Light-ON	E3T-FD11M 2M	E3T-FD13M 2M
			Dark-ON	E3T-FD12M 2M	E3T-FD14M 2M
Convergent-reflective		5 to 15 mm	Light-ON	E3T-SL11M 2M	E3T-SL13M 2M
			Dark-ON	E3T-SL12M 2M	E3T-SL14M 2M
		5 to 30 mm	Light-ON	E3T-SL21M 2M	E3T-SL23M 2M
			Dark-ON	E3T-SL22M 2M	E3T-SL24M 2M

Small Cylindrical Sensors NEW

A set of mounting nuts is included with the Sensor.

Sensing method	Appearance	Sensing distance	Operation mode	Model	
				NPN output	PNP output
Through-beam (Emitter + Receiver)		1 m	Light-ON	---	---
			Dark-ON	E3T-CT12 2M	E3T-CT14 2M
		500 mm	Light-ON	---	---
			Dark-ON	E3T-CT22S 2M	E3T-CT24S 2M
Diffuse-reflective (with adjuster)	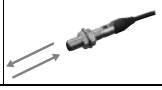	3 to 50 mm	Light-ON	E3T-CD11 2M	E3T-CD13 2M
			Dark-ON	---	---

*1. Values in parentheses indicate the minimum required distance between the Sensor and Reflector.
*2. The model number of the Emitter is expressed by adding an "L" to the set model number in the table. Example: E3T-ST11-L 2M
The model number of the Receiver is expressed by adding a "D" to the set model number in the table. Example: E3T-ST11-D 2M
Orders for individual Emitters and Receivers are accepted. (Modifications are required for some models.)
*3. Models are available either with or without the E39-R37-CA Reflector included.
Models with E39-R37-CA Reflector. E3T-SR4□-S
Models without Reflector. E3T-SR4□-C

Variety of Connection Specifications

The models with the connection specifications marked with a black circle in the table are available. These are applicable only to M2-mounting Sensors. The model number indication is a combination of the basic model and the connection specification.

Example: E3T-ST11-M1TJ 0.3M
Basic model number: E3T-ST11
Connection specification: M1TJ 0.3M

NPN Output

Model			Model number example	E3T-ST11-M1TJ 0.3M	E3T-ST11 5M	E3T-ST11R 2M	E3T-ST11-ECON 0.3M	E3T-ST11-ECON 2M
Sensing method	Sensing distance	Operation mode	Connection specification	M12 pre-wired Smartclick Connector (cable length: 0.3 m)	Pre-wired (cable length: 5 m)	Pre-wired robot (cable length: 2 m)	e-CON pre-wired connector (cable length: 0.3 m)	e-CON pre-wired connector (cable length: 2 m)
			Basic model number	-M1TJ 0.3M	5M	R 2M	-ECON 0.3M	-ECON 2M
Through-beam (side-view)	2 m	Light-ON	E3T-ST31	●	●	●	●	●
		Dark-ON	E3T-ST32	●	●	●	●	●
	1 m	Light-ON	E3T-ST11	●	●	●	●	●
		Dark-ON	E3T-ST12	●	●	●	●	●
	300 mm	Light-ON	E3T-ST21	●	●	---	●	●
		Dark-ON	E3T-ST22	●	●	---	●	●
Through-beam (flat)	500 mm	Light-ON	E3T-FT11	●	●	●	●	●
		Dark-ON	E3T-FT12	●	●	●	●	●
	300 mm	Light-ON	E3T-FT21	●	---	---	●	●
		Dark-ON	E3T-FT22	●	---	---	●	●
Retro-reflective	200 mm (100 mm)*	Light-ON	E3T-SR41	●	●	●	●	●
		Dark-ON	E3T-SR42	●	●	●	●	●
Diffuse-reflective	5 to 30 mm	Light-ON	E3T-FD11	●	●	●	●	●
		Dark-ON	E3T-FD12	●	●	●	●	●
Convergent-reflective	5 to 15 mm	Light-ON	E3T-SL11	●	●	●	●	●
		Dark-ON	E3T-SL12	●	●	●	●	●
	5 to 30 mm	Light-ON	E3T-SL21	●	●	●	●	●
		Dark-ON	E3T-SL22	●	●	●	●	●
BGS-reflective	1 to 15 mm	Light-ON	E3T-FL11	●	---	●	---	---
		Dark-ON	E3T-FL12	●	---	●	---	---
	1 to 30 mm	Light-ON	E3T-FL21	●	---	●	●	---
		Dark-ON	E3T-FL22	●	---	●	---	---

*The sensing distance depends on the Reflector that is used. The sensing distance is 200 mm if an E39-R4 is used and 100 mm if an E39-R37-CA is used.

PNP Output

Model			Model number example	E3T-ST13-M1TJ 0.3M	E3T-ST13 5M	E3T-ST13R 2M
Sensing method	Sensing distance	Operation mode	Connection specification	M12 pre-wired Smartclick Connector (cable length: 0.3 m)	Pre-wired (cable length: 5 m)	Pre-wired robot (cable length: 2 m)
			Basic model number	-M1TJ 0.3M	5M	R 2M
Through-beam (side-view)	2 m	Light-ON	E3T-ST33	●	●	●
		Dark-ON	E3T-ST34	●	●	●
	1 m	Light-ON	E3T-ST13	●	●	●
		Dark-ON	E3T-ST14	●	●	●
	300 mm	Light-ON	E3T-ST23	●	---	---
		Dark-ON	E3T-ST24	●	---	---
Through-beam (flat)	500 mm	Light-ON	E3T-FT13	●	●	●
		Dark-ON	E3T-FT14	●	●	●
	300 mm	Light-ON	E3T-FT23	●	---	---
		Dark-ON	E3T-FT24	●	●	---
Retro-reflective	200 mm (100 mm)*	Light-ON	E3T-SR43	●	●	●
		Dark-ON	E3T-SR44	●	●	●
Diffuse-reflective	5 to 30 mm	Light-ON	E3T-FD13	●	●	●
		Dark-ON	E3T-FD14	●	●	●
Convergent-reflective	5 to 15 mm	Light-ON	E3T-SL13	●	●	●
		Dark-ON	E3T-SL14	●	●	●
	5 to 30 mm	Light-ON	E3T-SL23	●	●	●
		Dark-ON	E3T-SL24	●	●	●
BGS-reflective	1 to 15 mm	Light-ON	E3T-FL13	●	---	●
		Dark-ON	E3T-FL14	●	---	●
	1 to 30 mm	Light-ON	E3T-FL23	●	---	●
		Dark-ON	E3T-FL24	●	---	●

*The sensing distance depends on the Reflector that is used. The sensing distance is 200 mm if an E39-R4 is used and 100 mm if an E39-R37-CA is used.

Accessories (Order Separately)

Accessories for M2-mounting Sensors **These accessories are not included with the Sensor. Order them separately if required.**

Name		Applicable Sensor	Model	Quantity	Dimensions page	Remarks
Mutual Interference Prevention Filter for Through-beam Side-view Sensors *1		**E3T-ST3□**	**E39-E14**	4 (Two each for Emitter and Receiver)	19	Sensing distance 1 m
		E3T-ST1□				Sensing distance 0.5 m
Slit for Through-beam Side-view Sensors	0.5 dia.	**E3T-ST3□**	**E39-S63**	2 (One each for Emitter and Receiver; common with Slit widths of 1 dia. and 0.5 dia.)		Sensing distance 200 mm, Minimum detectable object (typical) 0.5-mm dia.
		E3T-ST1□				Sensing distance 100 mm, Minimum detectable object (typical) 0.5-mm dia.
		E3T-ST2□				Sensing distance 30 mm, Minimum detectable object (typical) 0.5-mm dia.
	1 dia.	**E3T-ST3□**				Sensing distance 600 mm, Minimum detectable object (typical) 1-mm dia.
		E3T-ST1□				Sensing distance 300 mm, Minimum detectable object (typical) 1-mm dia.
		E3T-ST2□				Sensing distance 100 mm, Minimum detectable object (typical) 1-mm dia.
Slit for Through-beam Flat Sensors	0.5 dia.	**E3T-FT1□**	**E39-S64**			Sensing distance 50 mm, Minimum detectable object (typical) 0.5-mm dia.
		E3T-FT2□				Sensing distance 30 mm, Minimum detectable object (typical) 0.5-mm dia.
	1 dia.	**E3T-FT1□**				Sensing distance 100 mm, Minimum detectable object (typical) 1-mm dia.
		E3T-FT2□				Sensing distance 50 mm, Minimum detectable object (typical) 1-mm dia.
Sensitivity Adjustment Unit for Through-beam Side-view Sensors		**E3T-ST3□**	**E39-E10**	1		Sensing distance (typical) 1,200 to 1,800 mm
		E3T-ST1□				Sensing distance (typical) 300 to 800 mm
Mounting Brackets for Side-view Sensors *2		**E3T-S□□□**	**E39-L116**	1	20	Nut plate provided
			E39-L117			
			E39-L118		21	
Mounting Brackets for Flat Sensors *2		**E3T-F□□□**	**E39-L119**			---
			E39-L120			
Screw Set for Side-view Sensors *3*4		**E3T-S□□□**	**E39-L164**	2 for each	---	Material: Iron (Same type as provided with the Sensor.) Contents: Phillips screws (M2×14), Hexagonal nuts, Spring washers, Flat washers
Screw Set for Flat Sensors *3*4		**E3T-F□□□**	**E39-L165**			Material: Iron (Same type as provided with the Sensor.) Contents: Phillips screws (M2×8), Hexagonal nuts, Spring washers, Flat washers
SUS Screw Set for Flat Sensors *3		**E3T-F□□□**	**E39-L172**	2		Material: SUS304 Contents: Bolt with hexagonal hole (M2×6)
SUS Screw Set for Side-view Sensors *3		**E3T-S□□□**	**E39-L173**	2 for each		Material: SUS304 Contents: Bolt with hexagonal hole (M2×12), Hexagonal nuts, Spring washers, Flat washers

***1.** An arrow indicates the polarization direction. Mutual interference can be prevented by using different polarization directions for adjacent Emitters/Receivers.
***2.** When using Through-beam Sensors (E3T-ST□□, E3T-FT□□), order one bracket for the Emitter and one for the Receiver.
***3.** Order two Sets, one for the Emitter and one for the Receiver, for Through-beam Sensors (E3T-ST□□ or E3T-FT□□).
This is the Screw Set for mounting the Sensor to the Mounting Bracket. Order this Set if you loose the screws. Do not use this Screw Set to mount the Mounting Bracket to the equipment.
***4.** This is included with the Sensor.

Accessories for M3-mounting Sensors

These accessories are not included with the Sensor. Order them separately if required.

Name		Applicable Sensor	Model	Quantity	Dimensions page	Remarks
Slits for Through-beam Side-view Sensors	0.5 dia.	**E3T-ST1□M**	**E39-S76A**	2 (One each for Emitter and Receiver)	19	Sensing distance 100 mm, Minimum detectable object (typical) 0.5-mm dia.
		E3T-ST2□M				Sensing distance 30 mm, Minimum detectable object (typical) 0.5-mm dia.
	1 dia.	**E3T-ST1□M**	**E39-S76B**			Sensing distance 300 mm, Minimum detectable object (typical) 1-mm dia.
		E3T-ST2□M				Sensing distance 100 mm, Minimum detectable object (typical) 1-mm dia.
Mounting Bracket for Side-view Sensors *1		**E3T-S□□□M**	**E39-L166**	1	22	Nut plate provided
Mounting Bracket for Flat Sensors		**E3T-FD□□M**	**E39-L167**			---
Back-mounting Spacer for Flat Sensors			**E39-L168**			Use this Spacer when mounting a Flat Sensor (E3T-FD□□M) from the back.
SUS Screw Set for Flat Sensors *2		**E3T-FD□□M**	**E39-L170**	2	---	Material: SUS304 Contents: Bolt with hexagonal hole (M3×6)
SUS Screw Set for Side-view Sensors *1*2		**E3T-S□□□M**	**E39-L171**	2 for each		Material: SUS304 Contents: Bolt with hexagonal hole (M3×15), Hexagonal nuts, Spring washers, Flat washers

***1.** When using Through-beam Sensors (E3T-ST□□M), order one bracket for the Emitter and one for the Receiver.
***2.** This is the Screw Set for mounting the Sensor to the Mounting Bracket. Order this Set if you loose the screws. Do not use this Screw Set to mount the Mounting Bracket to the equipment.

Accessories for Small Cylindrical Sensors

Name	Applicable Sensor	Model	Quantity	Dimensions Page	Remarks
SUS Nut Set for Through-beam Sensors *1	**E3T-CT□□** **E3T-CT□□S**	**E39-M5**	4 (Hexagonal nuts), 2 (Toothed washers)	---	Material: SUS303 (Same type as provided with the Sensor.)
SUS Nut Set for Diffuse-reflective Sensors	**E3T-CD□□**	**E39-M6**	2 (Hexagonal nuts), 1(Toothed washers)		
Adjustment Driver for Diffuse-reflective Sensors		**E39-G17**	1		This Driver is used to turn the sensitivity adjuster. Provided with E3T-CD□□

***1.** This Nut Set is for the Emitter/Receiver. This is the Nut Set for mounting the Sensor. Order this Set if you loose the screws.

Accessories for All Sensors

Name	Applicable Sensor	Model	Quantity	Dimensions Page	Remarks
Small Reflectors (for Retro-reflective Sensors)	**E3T-SR4□**	**E39-R4**	1	18	Sensing distance 200 mm [30 mm] *1 Minimum detectable object 2-mm dia. Provided with the E3T-SR4□
	E3T-SR4□-S	**E39-R37-CA** *2			Sensing distance 100 mm [10 mm] *1 Minimum detectable object 2-mm dia. Provided with the E3T-SR4□-S
Tape Reflectors (for Retro-reflective Sensors)	**E3T-SR4□-C**	**E39-RS1-CA** *2		19	Sensing distance 100 mm [10 mm] *1 Minimum detectable object 2-mm dia. Use Tape Reflectors in combination with the E3T-SR4□-C, which does not come with a Reflector.
		E39-RS2-CA *2			
		E39-RS3-CA *2			

***1.** Values in parentheses indicate the minimum required distance between the Sensor and Reflector.
***2.** The E3T-SR4□ cannot be used with the E39-R37 or E39-RS1/2/3 (without CA) Tape Reflectors.
The E39-□-CA Reflector is for use only with the E3T-SR4□. It cannot be used with other Sensors.

Sensor I/O Connectors

(Models with Pre-wired Connectors: A Connector is not provided with the Sensor. Be sure to order a Connector separately.)

Size	Cable	Appearance	Cable type		Model
M12 (For -M1TJ models)	Standard cable	Straight	2 m	4-wire	**XS5F-D421-D80-A**
			5 m		**XS5F-D421-G80-A**
e-CON		Connector on one end	2 m		**E39-ECON2M**
			5 m		**E39-ECON5M**
		Connector on both ends	0.5 to 1 m		**E39-ECONW□M**
			1.1 to 1.5 m		Replace □ with the cable length in 0.1-m increments.
			1.6 to 2 m		

Note: When using Through-beam Sensors, order one connector for the Emitter and one for the Receiver.

E3T

Ratings and Specifications

Item / Sensing method		Through-beam							Retro-reflective (without M.S.R. function)
Appearance		Rectangular type (Side-view)			Rectangular type (Flat)		Cylindrical type (Top-view)	Cylindrical type (Side-view)	Rectangular type (Side-view)
NPN output	Light-ON	E3T-ST31	E3T-ST11 E3T-ST11M	E3T-ST21 E3T-ST21M	E3T-FT11	E3T-FT21	---	---	E3T-SR41
	Dark-ON	E3T-ST32	E3T-ST12 E3T-ST12M	E3T-ST22 E3T-ST22M	E3T-FT12	E3T-FT22	E3T-CT12	E3T-CT22S	E3T-SR42
PNP output	Light-ON	E3T-ST33	E3T-ST13 E3T-ST13M	E3T-ST23 E3T-ST23M	E3T-FT13	E3T-FT23	---	---	E3T-SR43
	Dark-ON	E3T-ST34	E3T-ST14 E3T-ST14M	E3T-ST24 E3T-ST24M	E3T-FT14	E3T-FT24	E3T-CT14	E3T-CT24S	E3T-SR44
Sensing distance		2 m	1 m	300 mm	500 mm	300 mm	1 m	500 mm	200 mm [30 mm] *1 (Using the E39-R4) 100 mm [10 mm] *1 (Using the E39-R37-CA)
Standard sensing object		Opaque, 3-mm dia. min.	Opaque, 2-mm dia. min.		Opaque, 1.3-mm dia. min.		Opaque, 4-mm dia. min.	Opaque, 5-mm dia. min.	Opaque, 27-mm dia. min.
Minimum detectable object (typical)		Opaque, 3-mm dia.	Opaque, 2-mm dia.		Opaque, 1.3-mm dia.		---		2-mm dia. (Sensing distance 100 mm)
Hysteresis (white paper)		---							
Black/white error		---							
Directional angle		Emitter: 2 to 20° Receiver: 2 to 70°			Emitter: 3 to 25° Receiver: 3° min.		Receiver: 2°	Receiver: 10°	2 to 20°
Light source (wavelength)		Red LED (650 nm)					Red LED (630 nm)	Red LED (625 nm)	Red LED (650 nm)
Power supply voltage		12 to 24 VDC ±10%, ripple (p-p) 10% max.							
Current consumption		30 mA max. (Emitter 10 mA max., Receiver 20 mA max.)					30 mA max. (Emitter 15 mA max., Receiver 15 mA max.)		20 mA max.
Control output		Load power supply voltage: 26.4 VDC max. Load current: 50 mA max. (residual voltage: 2 V max. for load current of 10 to 50 mA, 1 V max. for load current of less than 10 mA) Open-collector output					Load power supply voltage: 30 VDC max. Load current: 80 mA max. (residual voltage: 1 V max.) Open-collector output		Load power supply voltage: 26.4 VDC max. Load current: 50 mA max. (residual voltage: 2 V max. for load current of 10 to 50 mA, 1 V max. for load current of less than 10 mA) Open-collector output
Protection circuits		Power supply and control output reverse polarity protection, Output short-circuit protection					Power supply reverse polarity protection, Output short-circuit protection		Power supply and control output reverse polarity protection, Output short-circuit protection, Mutual interference prevention
Response time		Operate or reset: 1 ms max.					Operate or reset: 0.5 ms max.		Operate or reset: 1 ms max.
Ambient illumination		Incandescent lamp: 5,000 lx max., Sunlight: 10,000 lx max.					Incandescent lamp: 3,000 lx max.		Incandescent lamp: 5,000 lx max., Sunlight: 10,000 lx max.
Ambient temperature range		Operating: –25 to +55°C Storage: –40 to +70°C (with no icing or condensation)					Operating: –25 to +55°C Storage: –30 to +70°C (with no icing or condensation)		Operating: –25 to +55°C Storage: –40 to +70°C (with no icing or condensation)
Ambient humidity range		Operating: 35% to +85% Storage: 35% to +95% (with no condensation)					Operating or Storage: 35% to +85% (with no condensation)		Operating: 35% to +85% Storage: 35% to +95% (with no condensation)
Insulation resistance		20 MΩ min. at 500 VDC							
Dielectric strength		AC1,000V, 50/60 Hz for 1 min.					AC500V, 50/60 Hz for 1 min.		AC1,000V, 50/60 Hz for 1 min.
Vibration resistance (destruction)		10 to 2,000 Hz, 1.5-mm double amplitude or 300 m/s^2 for 0.5 hours each in X, Y, and Z directions					10 to 55Hz, 1.5-mm double amplitude for 2 hours each in X, Y, and Z directions		10 to 2,000 Hz, 1.5-mm double amplitude or 300 m/s^2 for 0.5 hours each in X, Y, and Z directions
Shock resistance (destruction)		1,000 m/s^2 3 times each in X, Y, and Z directions					500 m/s^2 3 times each in X, Y, and Z directions		1,000m/s^2 3 times each in X, Y, and Z directions
Degree of protection		IP67 (IEC 60529)					IP65 (IEC 60529)		IP67 (IEC 60529)
Connection method		Pre-wired (standard length: 2 m)							
Weight (packed state)		Approx. 40 g					Approx. 60 g		Approx. 20 g
Materials	Case	PBT (polybutylene terephthalate)					SUS303		PBT (polybutylene terephthalate)
	Display window	Denatured polyarylate					Polysulfone		Denatured polyarylate
	Lens	Denatured polyarylate					Polysulfone		Methacrylc resin
	Hexagonal nuts	---					SUS303		---
	Toothed washers	---					SUS303		---
Accessories *2		Instruction manual, Phillips screws (Side-view Sensors: M2 × 14, Flat Sensors: M2 × 8), Nuts, Spring washers, Flat washers *2					Instruction manual, Hexagonal nuts, Toothed washers		Instruction manual, Phillips screws (M2×14), Nuts, Spring washers, Flat washers, E39-R4 (E3T-SR4□ only), E39-R37-CA (E3T-SR4□-S only)

***1.** Values in parentheses indicate the minimum required distance between the Sensor and Reflector.
***2.** Only the *Instruction Manual* is included with an M3-mounting Sensor (E3T-ST□□M). Order the Set of Mounting Screws separately if required.

Item / Sensing method		Diffuse-reflective		Convergent-reflective		BGS-reflective	
Appearance		Rectangular type (Flat)	Cylindrical type (Top-view)	Rectangular type (Side-view)		Rectangular type (Flat)	
NPN output	Light-ON	E3T-FD11 E3T-FD11M	E3T-CD11	E3T-SL11 E3T-SL11M	E3T-SL21 E3T-SL21M	E3T-FL11	E3T-FL21
	Dark-ON	E3T-FD12 E3T-FD12M	---	E3T-SL12 E3T-SL12M	E3T-SL22 E3T-SL22M	E3T-FL12	E3T-FL22
PNP output	Light-ON	E3T-FD13 E3T-FD13M	E3T-CD13	E3T-SL13 E3T-SL13M	E3T-SL23 E3T-SL23M	E3T-FL13	E3T-FL23
	Dark-ON	E3T-FD14 E3T-FD14M	---	E3T-SL14 E3T-SL14M	E3T-SL24 E3T-SL24M	E3T-FL14	E3T-FL24
Sensing distance		5 to 30 mm (50 × 50 mm white paper)	3 to 50 mm (100 × 100 mm white paper)	5 to 15 mm (50 × 50 mm white paper)	5 to 30 mm (50 × 50 mm white paper)	1 to 15 mm (50 × 50 mm white paper)	1 to 30 mm (50 × 50 mm white paper)
Standard sensing object		---					
Minimum detectable object (typical)		0.15-mm dia. (sensing distance 10 mm)	---	0.15-mm dia. (sensing distance 10 mm)		0.15-mm dia. non-glossy object (sensing distance 10 mm)	
Hysteresis (white paper)		6 mm max.	15% or less of the sensing distance	2 mm max.	6 mm max.	0.5 mm max.	2 mm max.
Black/white error		---				15% max.	
Directional angle		---					
Light source (wavelength)		Red LED (650 nm)	Infrared LED (870 nm)	Red LED (650 nm)			
Power supply voltage		12 to 24 VDC ±10%, ripple (p-p) 10% max.					
Current consumption		20 mA max.					
Control output		Load power supply voltage: 26.4 VDC max. Load current: 50 mA max. (residual voltage: 2 V max. for load current of 10 to 50 mA, 1 V max. for load current of less than 10 mA) Open-collector output	Load power supply voltage: 30 VDC max. Load current: 80 mA max. (residual voltage: 1 V max.) Open-collector output	Load power supply voltage: 26.4 VDC max. Load current: 50 mA max. (residual voltage: 2 V max. for load current of 10 to 50 mA, 1 V max. for load current of less than 10 mA) Open-collector output			
Protection circuits		Power supply and control output reverse polarity protection, Output short-circuit protection, Mutual interference prevention	Power supply reverse polarity protection, Output short-circuit protection	Power supply and control output reverse polarity protection, Output short-circuit protection, Mutual interference prevention			
Response time		Operate or reset: 1 ms max.	Operate or reset: 0.5 ms max.	Operate or reset: 1 ms max.			
Ambient illumination		Incandescent lamp: 5,000 lx max., Sunlight: 10,000 lx max.	Incandescent lamp: 3,000 lx max.	Incandescent lamp: 5,000 lx max., Sunlight: 10,000 lx max.			
Ambient temperature range		Operating: –25 to +55°C Storage: –40 to +70°C (with no icing or condensation)	Operating: –25 to +55°C Storage: –30 to +70°C (with no icing or condensation)	Operating: –25 to +55°C Storage: –40 to +70°C (with no icing or condensation)			
Ambient humidity range		Operating: 35% to +85% Storage: 35% to +95% (with no condensation)	Operating or Storage: 35% to +85% (with no condensation)	Operating: 35% to +85% Storage: 35% to +95% (with no condensation)			
Insulation resistance		20 MΩ min. at 500 VDC					
Dielectric strength		1,000 VAC, 50/60 Hz for 1 min.	500 VAC, 50/60 Hz for 1 min.	1,000 VAC, 50/60 Hz for 1 min.			
Vibration resistance (destruction)		10 to 2,000 Hz, 1.5-mm double amplitude or 300 m/s^2 for 0.5 hours each in X, Y, and Z directions	10 to 55Hz, 1.5-mm double amplitude for 2 hours each in X, Y, and Z directions	10 to 2,000 Hz, 1.5-mm double amplitude or 300 m/s^2 for 0.5 hours each in X, Y, and Z directions			
Shock resistance (destruction)		1,000 m/s^2 3 times each in X, Y, and Z directions	500 m/s^2 3 times each in X, Y, and Z directions	1,000m/s^2 3 times each in X, Y, and Z directions			
Degree of protection		IP67 (IEC 60529)	IP65 (IEC 60529)	IP67 (IEC 60529)			
Connection method		Pre-wired (standard length: 2 m)					
Weight (packed state)		Approx. 20 g	Approx. 40 g	Approx. 20 g			
Materials	Case	PBT (polybutylene terephthalate)	SUS303	PBT (polybutylene terephthalate)			
	Display window	Denatured polyarylate	Epoxy	Denatured polyarylate			
	Lens	Denatured polyarylate	Polysulfone	Denatured polyarylate			
	Hexagonal nuts	---	SUS303	---			
	Toothed washers	---	SUS303	---			
Accessories *		Instruction manual, Phillips screws(M2 × 8), Nuts, Spring washers, Flat washers *	Instruction manual, Hexagonal nuts, Toothed washers, Adjustment driver	Instruction manual, Phillips screws(M2 × 14), Nuts, Spring washers, Flat washers *		Instruction manual, Phillips screws(M2 × 8), Nuts, Spring washers, Flat washers	

*Only the *Instruction Manual* is included with an M3-mounting Sensor (E3T-FD□□M or E3T-SL□□M). Order the Set of Mounting Screws separately if required.

Engineering Data (Typical)

M2-mounting and M3-mounting Sensors

Parallel Operating Range

Through-beam

E3T-ST3□ + E39-S63 Slit
(A Slit is mounted to the Emitter and Receiver.)

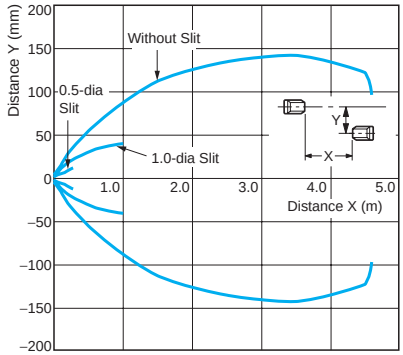

E3T-ST□□ + E39-E14 Mutual interference prevention filter
(A Slit is mounted to the Emitter and Receiver.)

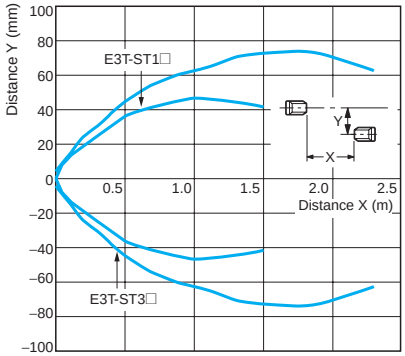

E3T-ST1□(M) + E39-S63 Slit
(A Slit is mounted to the Emitter and Receiver.)

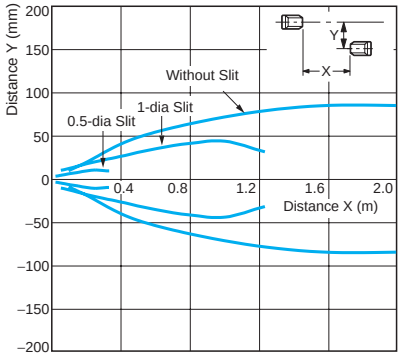

E3T-ST1□(M) + E39-S63 Slit (Enlarged graph)
(A Slit is mounted to the Emitter and Receiver.)

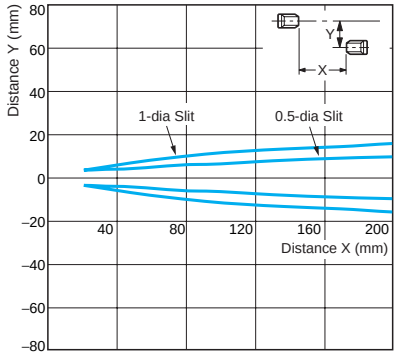

E3T-ST2□(M) + E39-S63 Slit
(A Slit is mounted to the Emitter and Receiver.)

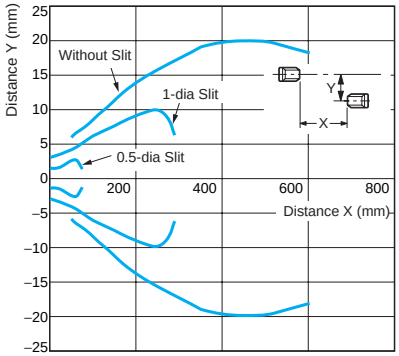

E3T-FT1□ + E39-S64 Slit
(A Slit is mounted to the Emitter and Receiver.)

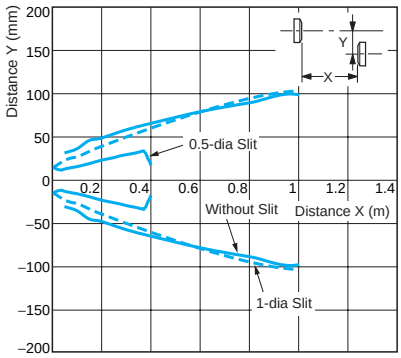

E3T-FT1□ + E39-S64 Slit (Enlarged graph)
(A Slit is mounted to the Emitter and Receiver.)

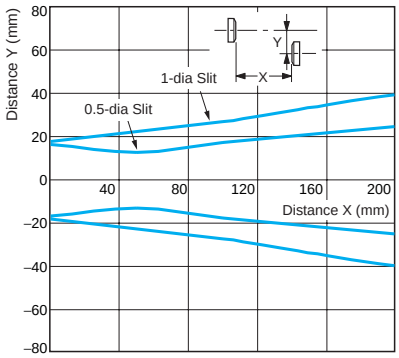

E3T-FT2□ + E39-S64 Slit
(A Slit is mounted to the Emitter and Receiver.)

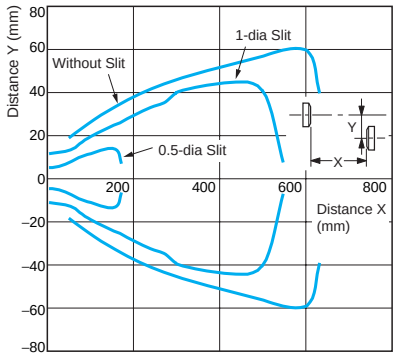

Retro-reflective
E3T-SR4□

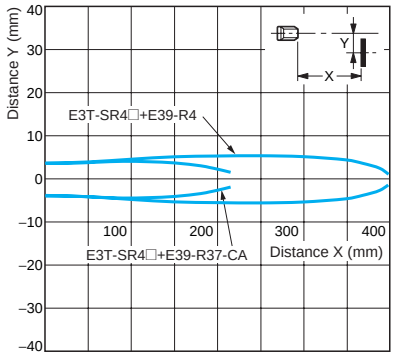

Operating Range

Diffuse-reflective

E3T-FD1□(M)

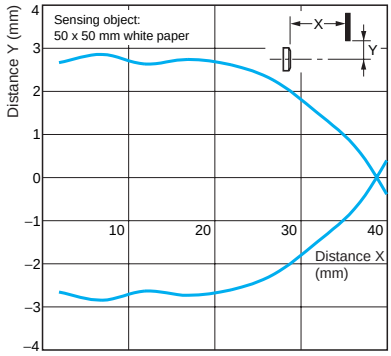

Convergent-reflective

E3T-SL1□(M)

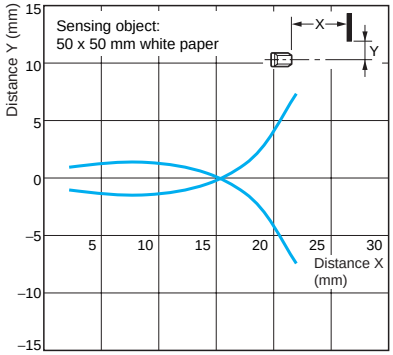

E3T-SL2□(M)

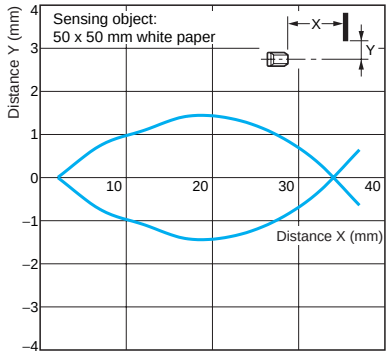

Inclination Detection Area Characteristic

BGS-reflective

E3T-FL1□

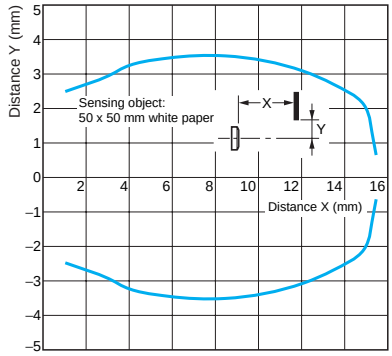

E3T-FL2□

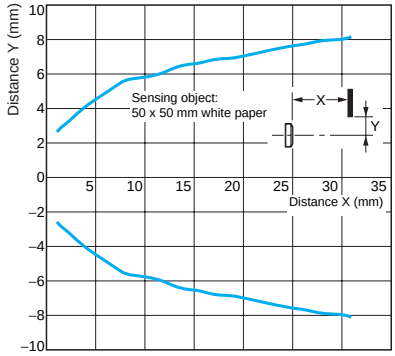

Convergent-reflective

E3T-SL1□(M) (Top to Bottom)

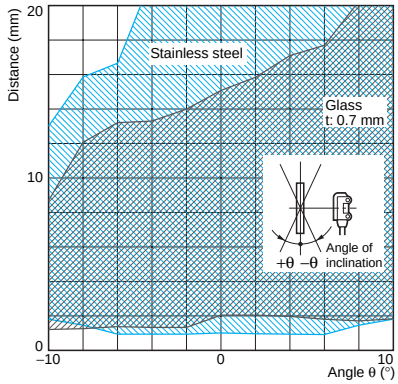

E3T-SL1□(M) (Right to Left)

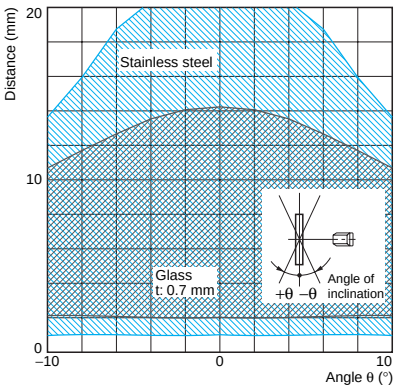

E3T-SL2□(M) (Top to Bottom)

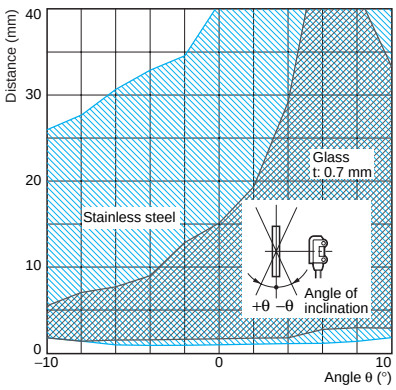

E3T-SL2□(M) (Right to Left)

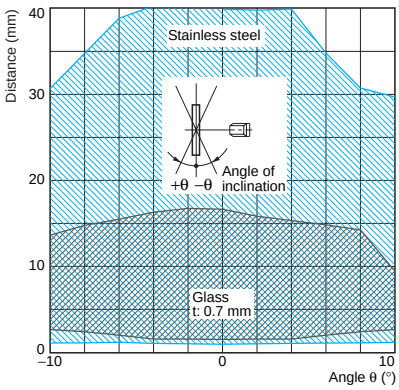

BGS-reflective

E3T-FL1□ (Top to Bottom)

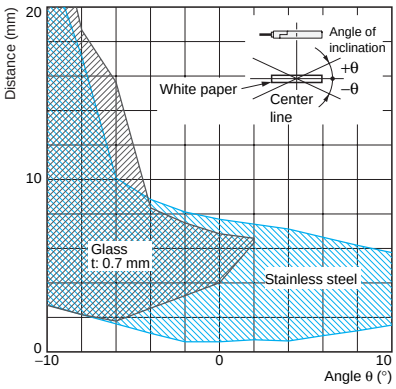

E3T-FL1□ (Right to Left)

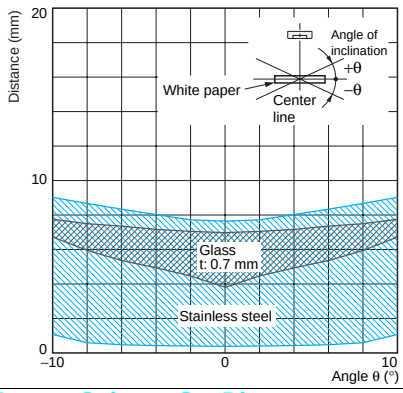

E3T-FL2□ (Top to Bottom)

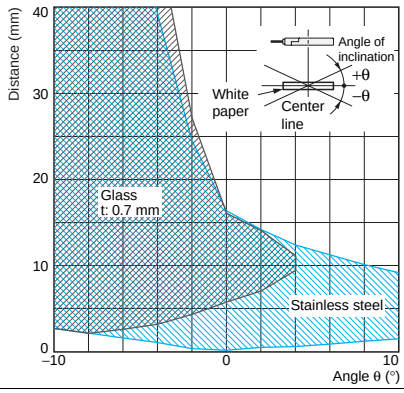

E3T-FL2□ (Right to Left)

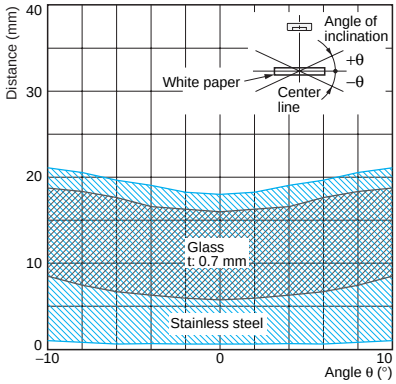

Excess Gain vs. Set Distance

Through-beam

E3T-ST1□(M)/E3T-ST3□

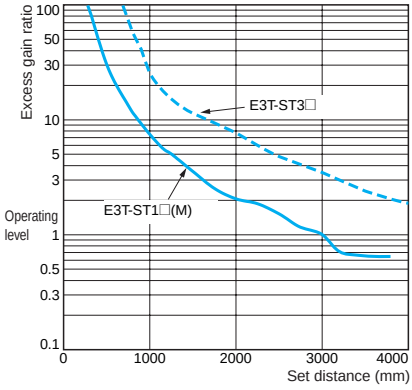

E3T-ST2□(M)

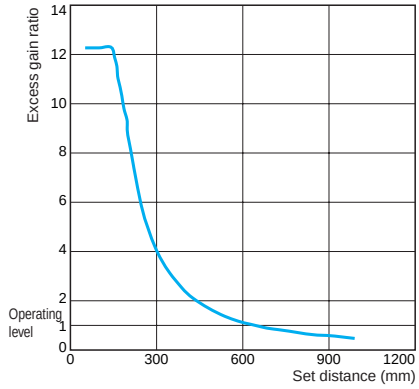

E3T-FT1□

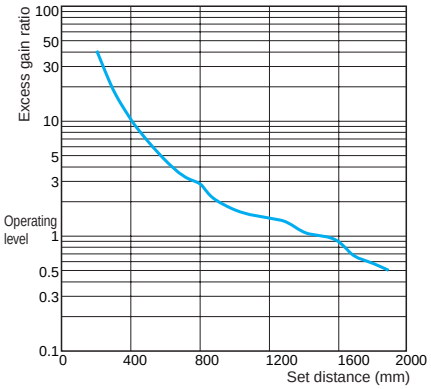

E3T-FT2□

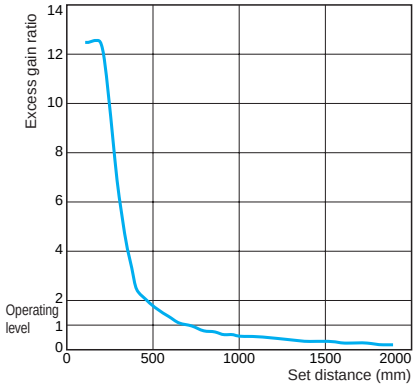

Retro-reflective
E3T-SR4□

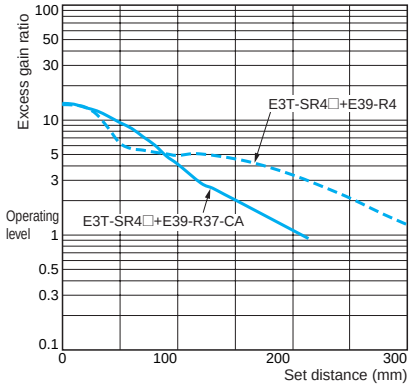

Diffuse-reflective
E3T-FD1□(M)

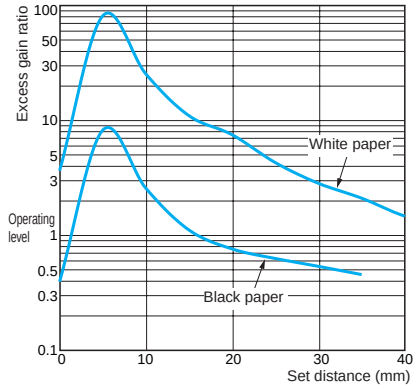

Convergent-reflective
E3T-SL1□(M)

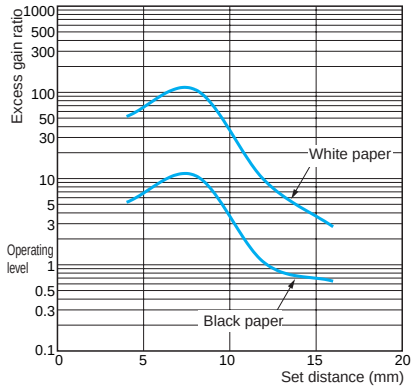

E3T-SL2□(M)

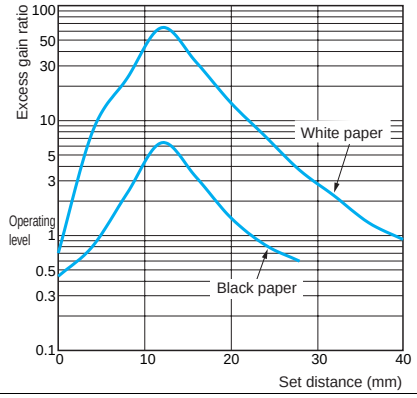

Sensing Object Size vs. Sensing Distance

Convergent-reflective
E3T-SL1□(M)

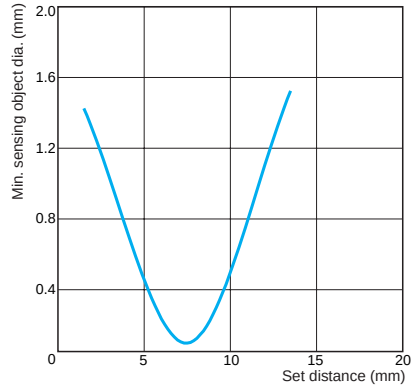

Diffuse/Convergent-reflective
E3T-FD1□(M)/E3T-SL2□(M)

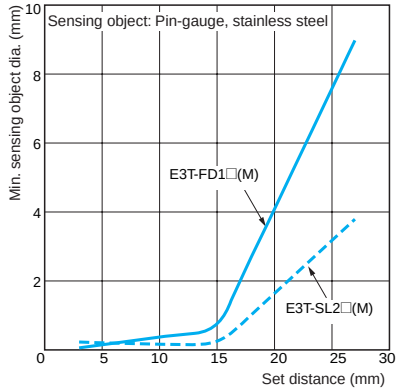

Sensing Distance vs. Material

Convergent-reflective
E3T-SL1□(M)

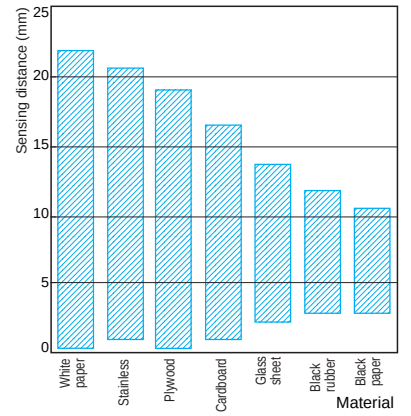

E3T-SL2□(M)

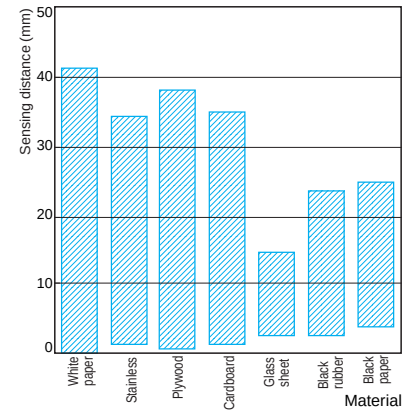

Diffuse-reflective
E3T-FD1□(M)

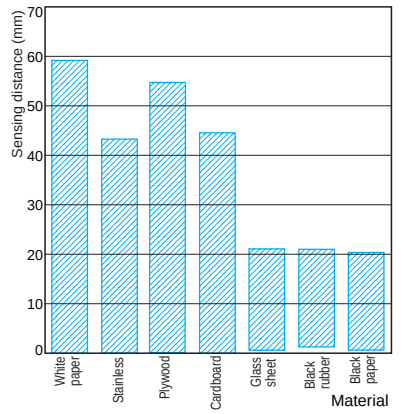

BGS-reflective
E3T-FL1□

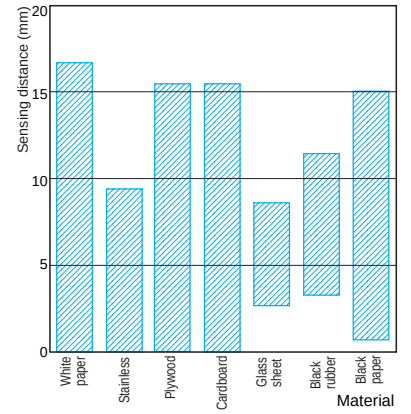

E3T-FL2□

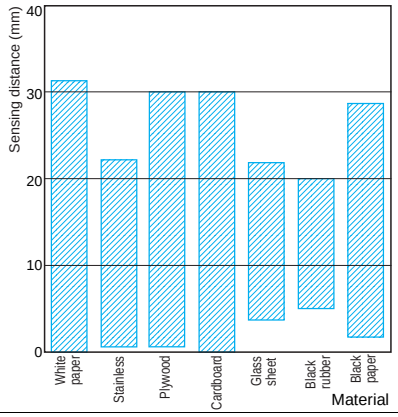

Sensing Distance Characteristics of Sensitivity Adjustment Unit (when Completing Optical Axis Adjustment)

E3T-ST1□ + E39-E10 Sensitivity Adjustment Unit
E3T-ST3□ + E39-E10 Sensitivity Adjustment Unit

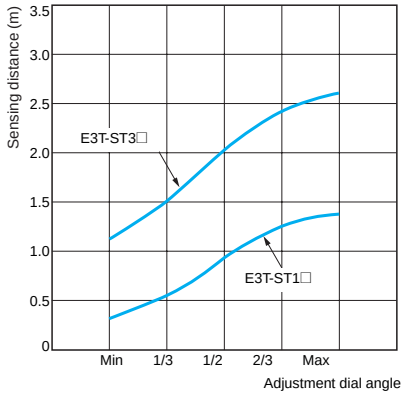

Small Cylindrical Sensors

Parallel Operating Range

Through-beam

E3T-CT1□

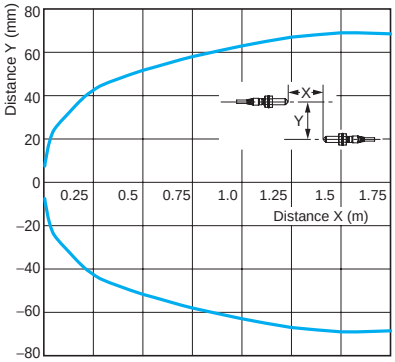

E3T-CT2□S (Top to Bottom)

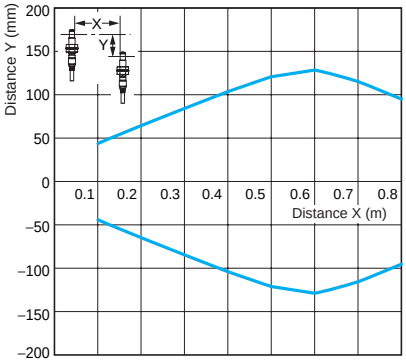

E3T-CT2□S (Right to Left)

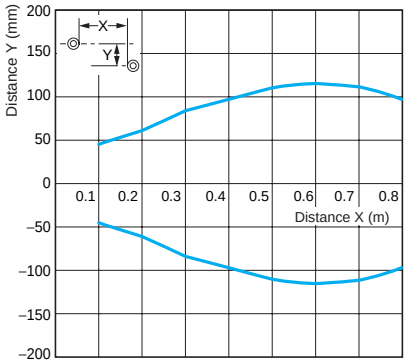

Operating Range

Diffuse-reflective

E3T-CD1□

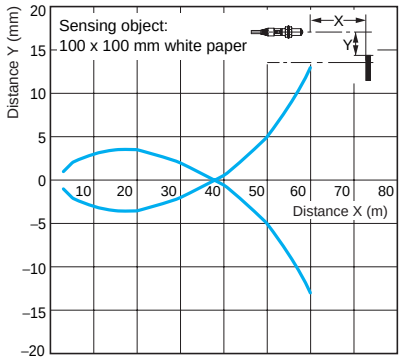

Sensing Distance vs. Material

Diffuse-reflective

E3T-CD1□

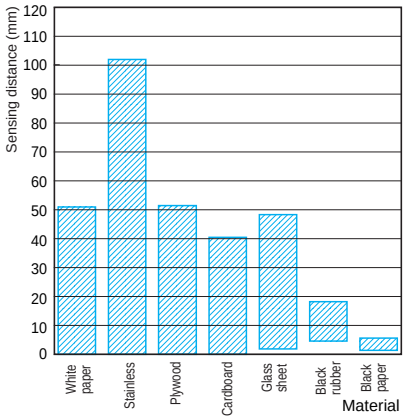

I/O Circuit Diagrams

NPN Output

Model	Operation mode	Timing charts	Output circuit
E3T-□□□1 E3T-□□□1M	Light-ON	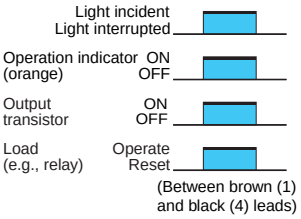	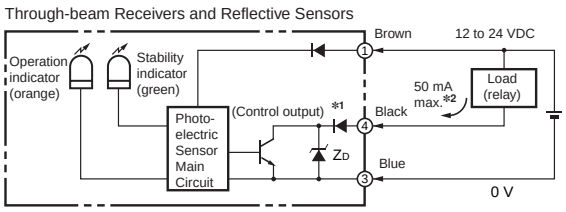
E3T-□□□2 E3T-□□□2M E3T-□□□2S	Dark-ON	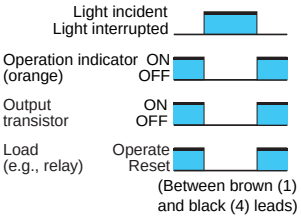	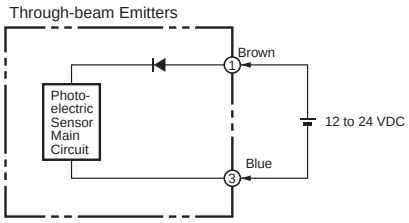

Connector Pin Arrangement*3

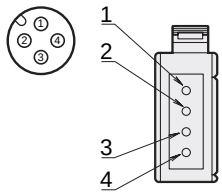

Note: Pin 2 is not used. Pins 2 and 4 are not used with Through-beam Emitters.

***1.** There is no diode for Small Cylindrical Sensors (E3T-C□□□(S)).
***2.** This is 80 mA max. for Small Cylindrical Sensors (E3T-C□□□(S)).
***3.** These connectors do not apply to the E3T-□□□□M and E3T-C□□□(S).

PNP Output

Model	Operation mode	Timing charts	Output circuit
E3T-□□□3 E3T-□□□3M	Light-ON	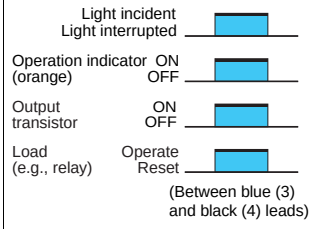	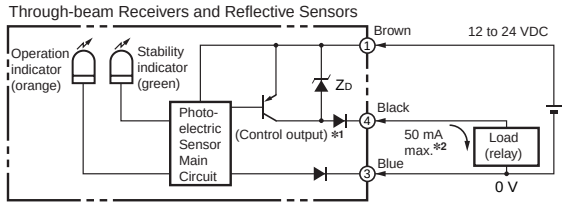
E3T-□□□4 E3T-□□□4M E3T-□□□4S	Dark-ON	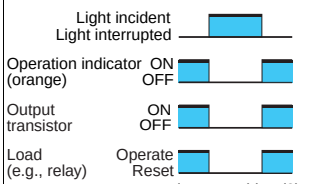	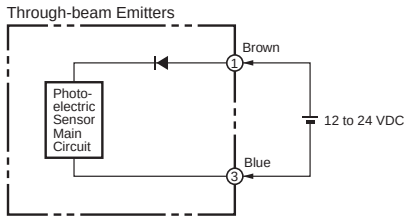

Connector Pin Arrangement*3

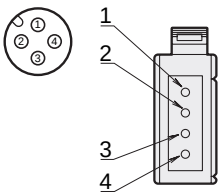

Note: Pin 2 is not used. Pins 2 and 4 are not used with Through-beam Emitters.

***1.** There is no diode for Small Cylindrical Sensors (E3T-C□□□(S)).
***2.** This is 80 mA max. for Small Cylindrical Sensors (E3T-C□□□(S)).
***3.** These connectors do not apply to the E3T-□□□□M and E3T-C□□□(S).

Plugs (Sensor I/O Connectors)

M12 Connector

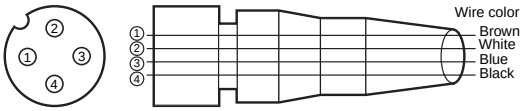

XS5F-D421-D80-A (cable length: 2 m)
XS5F-D421-G80-A (cable length: 5 m)

e-CON connector

E39-ECON□M

E39-ECONW□M

Pin arrangement

Classi-fication	Wire color	Connector pin No.	Application
DC	Brown	1	Power supply (+V)
	White	2	---
	Blue	3	Power supply (0 V)
	Black	4	Output

Note: Pin 2 is not used. Pin 2 and 4 are not used with Through-beam Emitters.

Safety Precautions

Refer to *Warranty and Limitations of Liability*.

⚠ WARNING

This product is not designed or rated for ensuring safety of persons. Do not use it for such purpose.

Do not apply AC power to the E3T, otherwise the E3T may rupture.

Precautions for Correct Use

Do not use the product in atmospheres or environments that exceed product ratings.

● Wiring

The maximum power supply voltage is 26.4 VDC. Before turning the power ON, make sure that the power supply voltage be not more than maximum voltage.

Load short-circuit protection

The E3T incorporates a load short-circuit protection function. If the load short-circuits, the output of the E3T will be turned OFF. Then, recheck the wiring and turn on the E3T again to reset the load short-circuit protection function. The load short-circuit protection function will work if there is a current flow that is 1.5 times larger than the rated load current. When using a capacitance load, be sure that the inrush current will not exceed 1.5 times larger than the rated current.

● Mounting

When mounting the Sensor, never strike it with a heavy object, such as a hammer. Doing so may reduce its watertight properties. Use screws with spring, flat, or toothed washers to secure the Sensor.
Tightening Torque
M2-mounting Sensors: 0.15 N·m max
M3-mounting Sensors: 0.5 N·m max
Small Cylindrical Sensors: 1 N·m max

Mounting the Sensor on Moving Parts

Consider models that use break resistant cables (e.g., Robotics Cables) if the Sensor will be mounted on a moving part, such as a robot hand. The flexing resistance of Robotics Cable at approximately 400 thousand times is far superior to that of standard cable at approximately 14 thousand times.

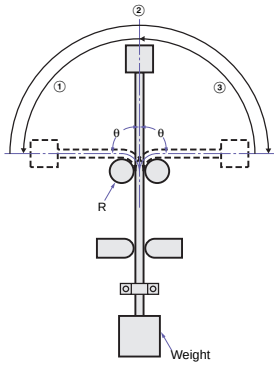

Cable Bending Rupture Test (Tough Cable Breaking Test)
The cable is repeatedly bent with power supplied to check the number of bends until the current is turned OFF.

Test \ Specimen		Standard cable 2.4-mm dia. (7/0.127-mm dia.), 3 conductors	Robotics cable 2.4-mm dia. (20/0.08-mm dia.), 3 conductors
Con-tents/ condi-tions	Bending angle (θ)	90° each to the left and right	
	Bending speed	50 times/min	
	Load	200 g	
	Operation per bend	Once in 1 to 3 in the diagram	
	Curvature radius of support point (R)	5 mm	
Result		Approx. 14,000 times	Approx. 400,000 times

● Adjusting

Indicators

- The following graphs indicate the status of each operating level.
- Be sure to use the E3T within the stable operating range.

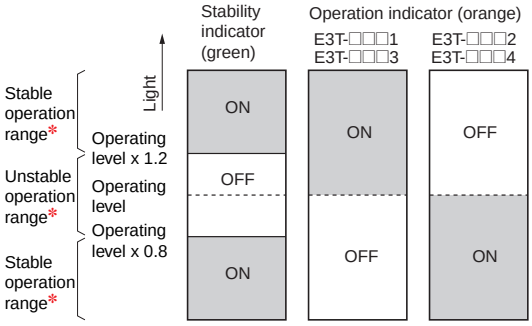

* If the E3T fs operating level is set to the stable operation range, the E3T will be in most reliable operation without being influenced by temperature change, voltage fluctuation, dust, or setting change. If the operating level cannot be set to the stable operation range, pay attention to environmental changes while operating the E3T.

Use of E39-E10 Sensitivity Adjustment Unit

(Dark-ON: E3T-ST12)

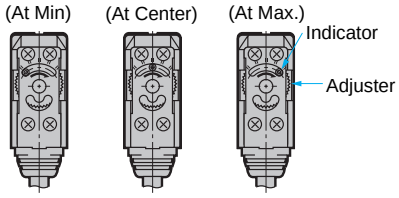

1. Mount the Unit on the Receiver.
2. Set the adjuster of the Sensitivity Adjustment Unit to Max. (Before shipping: Max.)
3. After mounting on the Sensor, adjust the optical axis and secure the Sensor.
4. Place a workpiece between the Emitter and Receiver and gradually turn the adjuster counterclockwise toward the Min. side. Stop turning the adjuster when the operation indicator and stability indicator (green) turn ON.
5. Remove the workpiece and confirm that the operation indicator is OFF and the stability indicator (green) is ON. This completes the adjustment.

Note: If the light attenuation rate due to a workpiece is 40% or less, the stability indicator will not turn ON whether or not light is received. When the variation of light is small such as when sensing semi-transparent workpieces, carefully perform preliminary testing.

E3T-CD□□ Sensitivity Adjustment

Use the special screwdriver that is provided with the Sensor to adjust the sensitivity. Do not exceed 0.8 N·m when turning the adjuster.

● Others

Do not install the E3T in the following locations.

- Locations subject to excessive dust or dirt
- Locations subject to direct sunlight
- Locations subject to corrosive gas
- Locations subject to contact with organic solvents
- Locations subject to vibration and shock
- Locations subject to contact with water, oil, or chemicals
- Locations subject to high humidities that might result in condensation

Dimensions

(Unit: mm)
Tolerance class IT16 applies to dimensions in this datasheet unless otherwise specified.

Sensors

M2-mounting Sensors

Through-beam Side-view Sensors

E3T-ST1□ (Emitter)
E3T-ST2□ (Emitter)
E3T-ST3□ (Emitter)

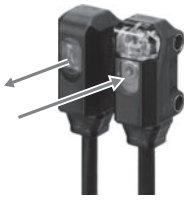

Emitter: E3T-ST□□-L
Receiver: E3T-ST□□-D

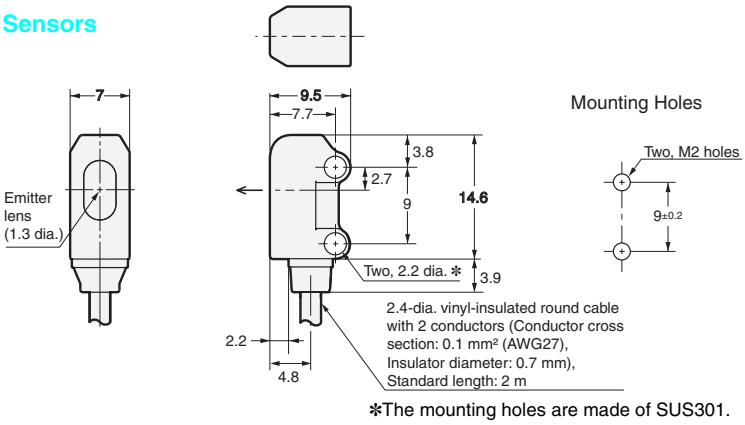

✻The mounting holes are made of SUS301.

E3T-ST1□ (Receiver)
E3T-ST2□ (Receiver)
E3T-ST3□ (Receiver)

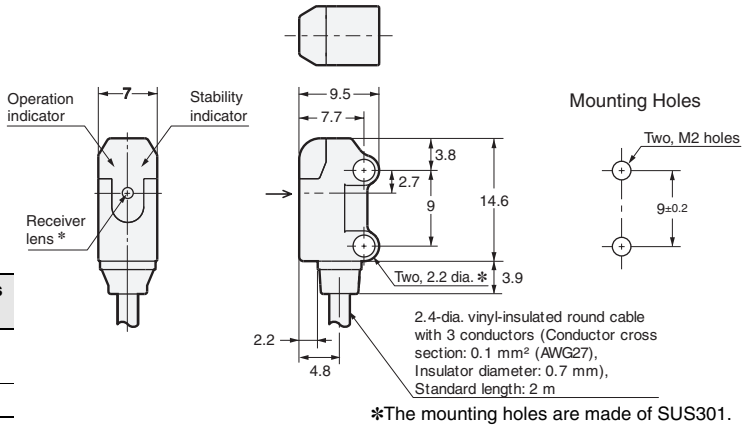

✻The mounting holes are made of SUS301.

✻The receiver lens diameters are given below.

Model	Receiver lens diameter
E3T-ST1□-D E3T-ST2□-D	(1.3 dia.)
E3T-ST3□-D	(2.4 dia.)

M12 Smartclick Pre-wired Connector Model (E3T-ST□□-M1TJ/E3T-FT□□-M1TJ)

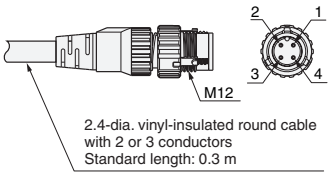

e-CON Pre-wired Connector Model (E3T-ST□□-ECON/E3T-FT□□-ECON)

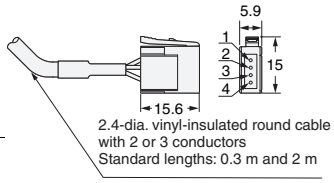

Through-beam Flat Sensors

E3T-FT1□ (Emitter)
E3T-FT2□ (Emitter)

Emitter: E3T-FT□□-L
Receiver: E3T-FT□□-D

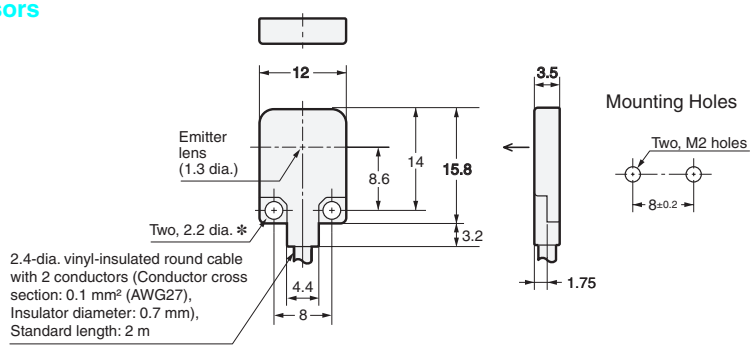

✻The mounting holes are made of SUS301.

Terminal No.	Specifications
1	+V
2	---
3	0 V
4	Output (receiver only)

✻Refer to *Mounting the Sensor on Moving Parts* on page 13 for details on Robotics Cable models.

E3T-FT1□ (Receiver)
E3T-FT2□ (Receiver)

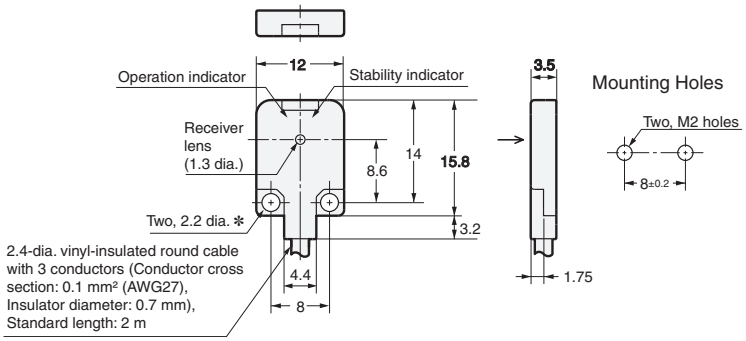

✻The mounting holes are made of SUS301.

Retro-reflective Side-view Sensors

E3T-SR4□

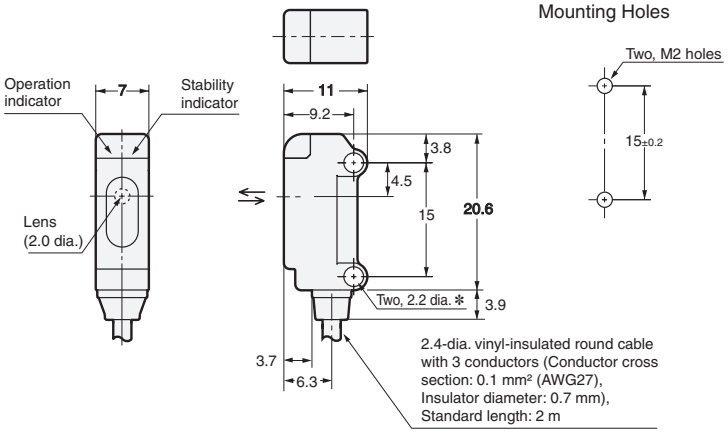

✻The mounting holes are made of SUS301.

M12 Smartclick Pre-wired Connector Model (E3T-SR□□-M1TJ/E3T-FD□□-M1TJ/ E3T-SL□□-M1TJ)

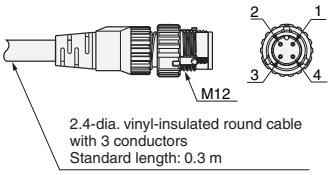

Diffuse-reflective Flat Sensors

E3T-FD1□

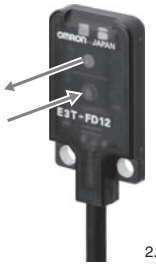

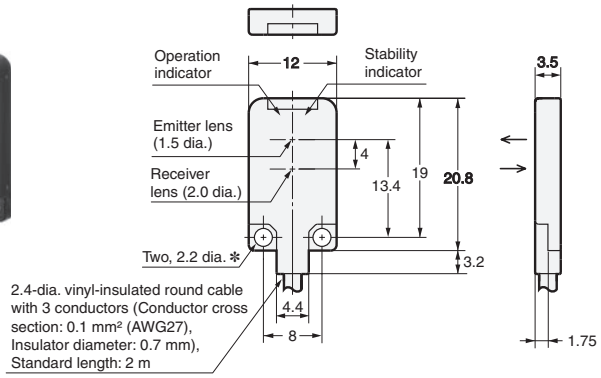

✻The mounting holes are made of SUS301.

Mounting Holes

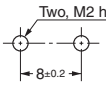

e-CON Pre-wired Connector (E3T-SR□□-ECON/E3T-FD□□-ECON/ E3T-SL□□-ECON)

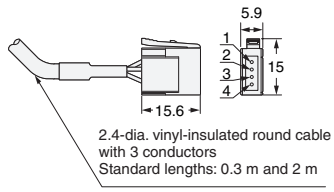

Terminal No.	Specifi-cations
1	+V
2	---
3	0 V
4	Output

Convergent-reflective Side-view Sensors

E3T-SL1□
E3T-SL2□

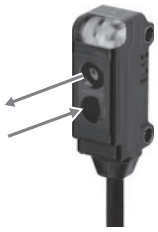

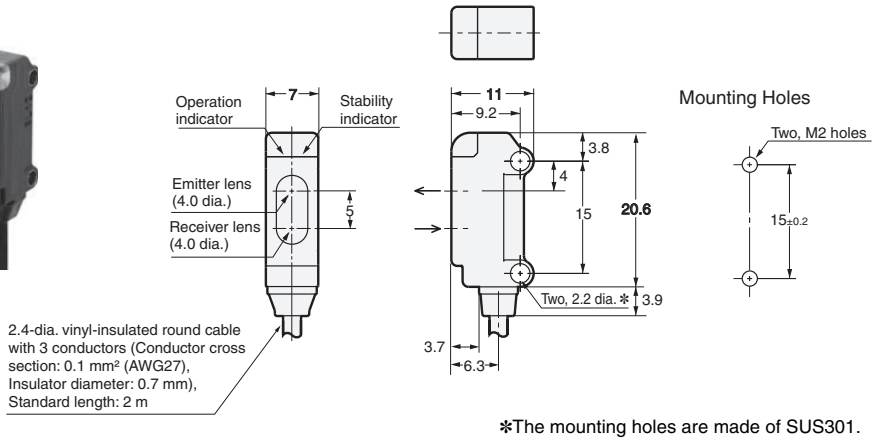

✻The mounting holes are made of SUS301.

✻Refer to *Mounting the Sensor on Moving Parts* on page 13 for details on Robotics Cable models.

BGS-reflective Flat Sensors

E3T-FL1□
E3T-FL2□

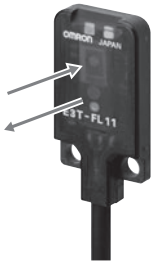

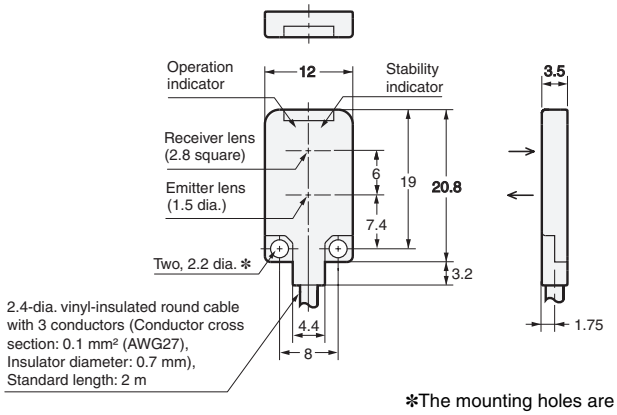

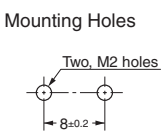

M12 Smartclick Pre-wired Connector Model (E3T-FL□□-M1TJ)

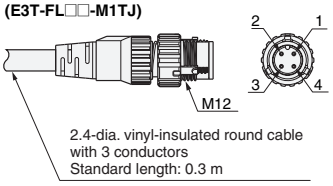

e-CON Pre-wired Connector (E3T-FL□□-ECON)

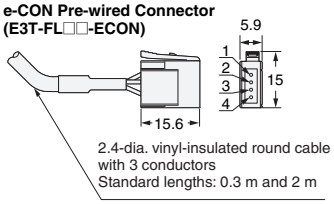

✻The mounting holes are made of SUS301.

Terminal No.	Specifications
1	+V
2	---
3	0 V
4	Output

✻Refer to *Mounting the Sensor on Moving Parts* on page 13 for details on Robotics Cable models.

M3-mounting Sensors

Through-beam Side-view Sensors

E3T-ST1□M (Emitter)
E3T-ST2□M (Emitter)

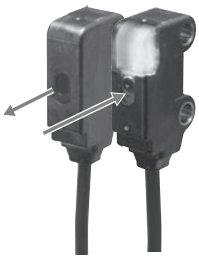

Emitter: E3T-ST□□M-L
Receiver: E3T-ST□□M-D

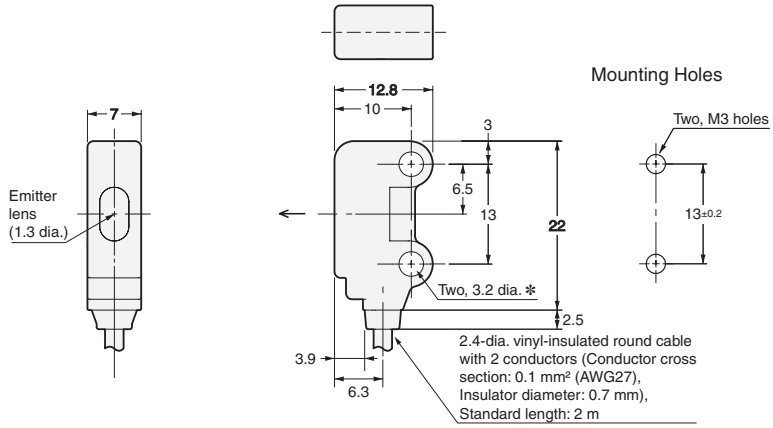

✻The mounting holes are made of SUS304.

E3T-ST1□M (Receiver)
E3T-ST2□M (Receiver)

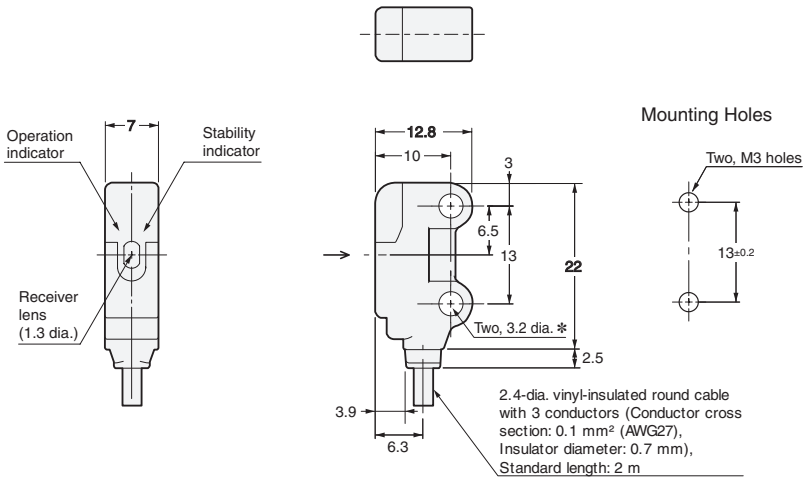

✻The mounting holes are made of SUS304.

Diffuse-reflective Flat Sensors

E3T-FD1□M

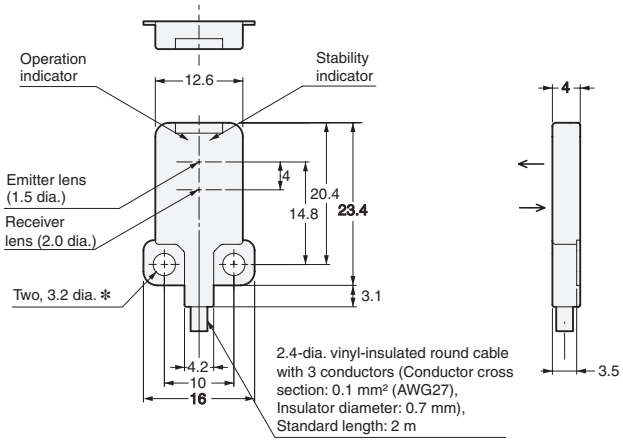

Mounting Holes

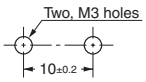

✻The mounting holes and plate are made of SUS304.

Convergent-reflective Side-view Sensors

E3T-SL1□M
E3T-SL2□M

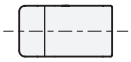

Mounting Holes

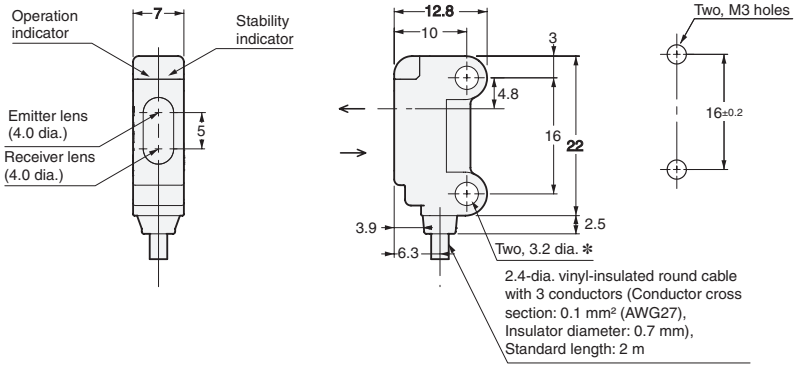

✻The mounting holes are made of SUS304.

Small Cylindrical Sensors

Through-beam Top-view Sensors

E3T-CT1□ (Emitter)

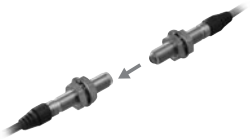

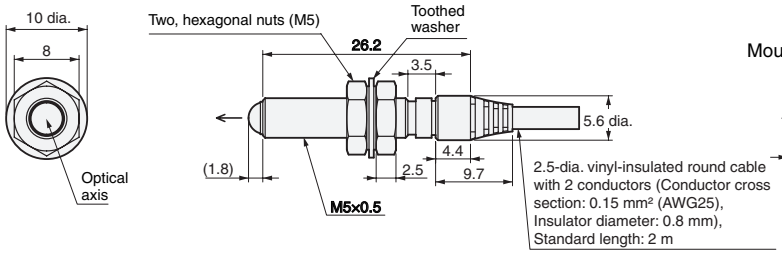

Mounting Hole

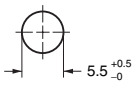

Emitter: E3T-CT1□-L
Receiver: E3T-CT1□-D

E3T-CT1□ (Receiver)

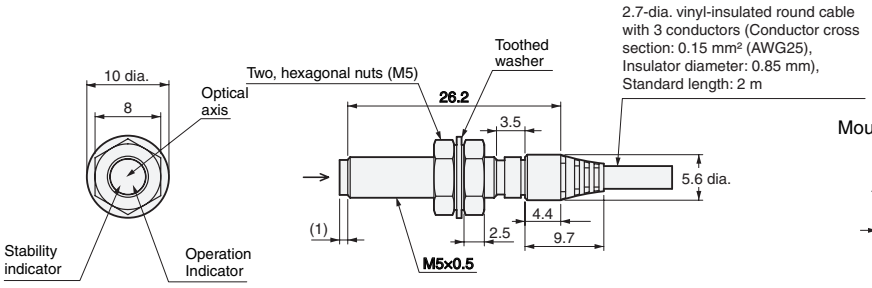

Mounting Hole

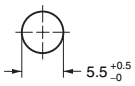

Through-beam Side-view Sensors

E3T-CT2□S (Emitter)

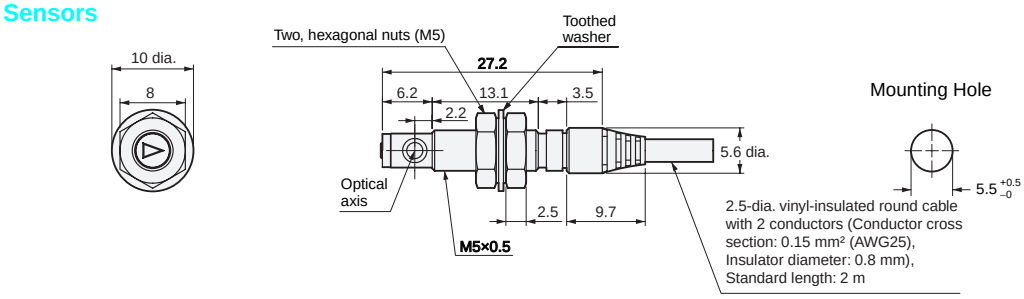

Emitter: E3T-CT2□S-L
Receiver: E3T-CT2□S-D

E3T-CT2□S (Receiver)

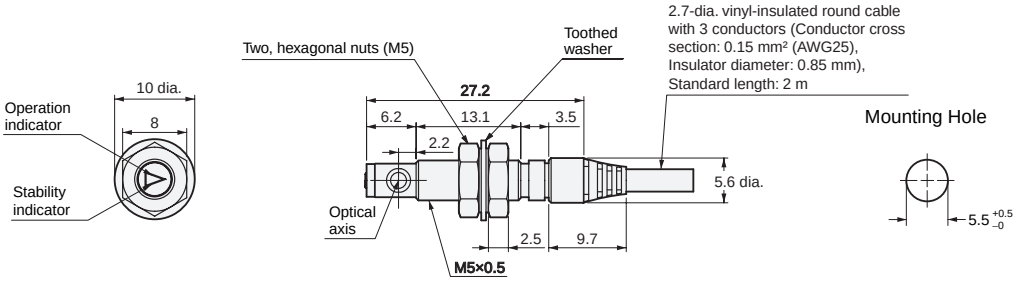

Diffuse-reflective Top-view Sensors

E3T-CD1□

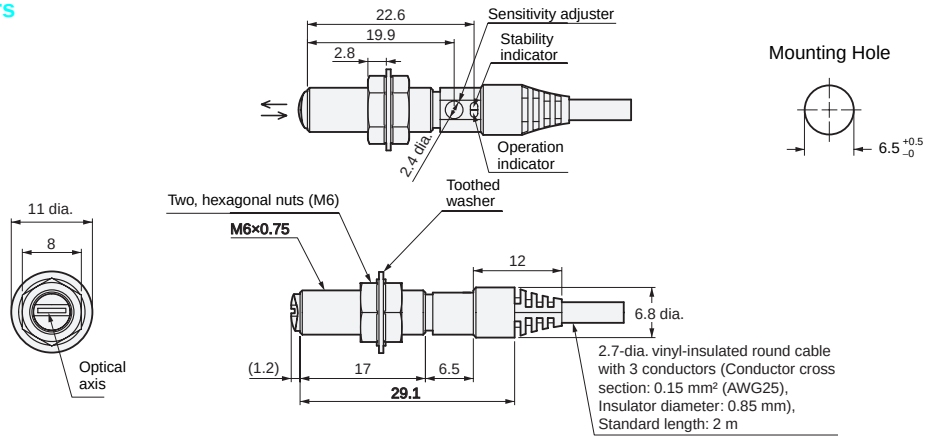

Accessories

Reflector (Provided with E3T-SR4□)

E39-R4

Material, reflective surface: acrylic
Rear surface: ABS

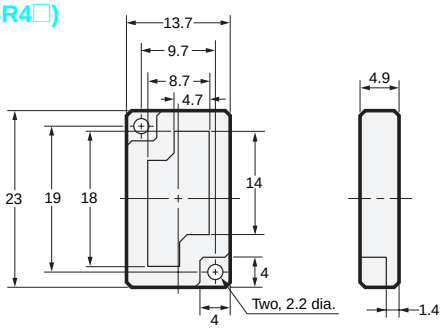

Reflector (Provided with E3T-SR4□-S)

E39-R37-CA

Material: Mounting plate: stainless steel (SUS301)
Reflective surface: acrylic

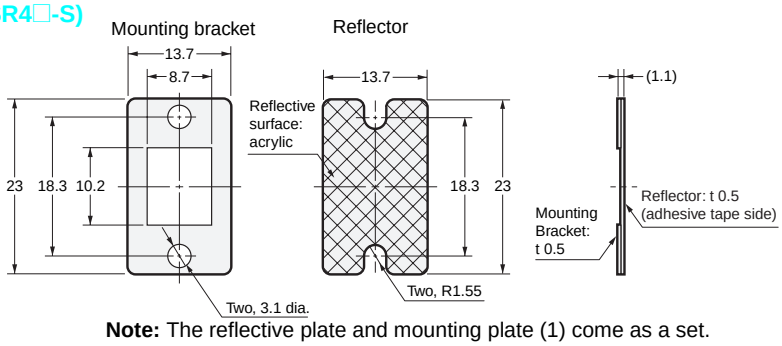

Note: The reflective plate and mounting plate (1) come as a set.

Accessories (Order Separately)

Tape Reflectors

E39-RS1-CA

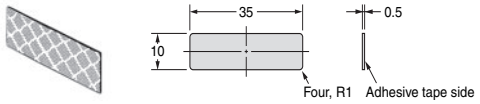

Material: Acrylic

E39-RS2-CA

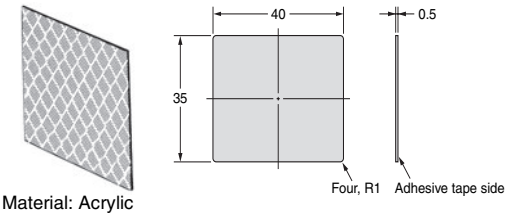

Material: Acrylic

E39-RS3-CA

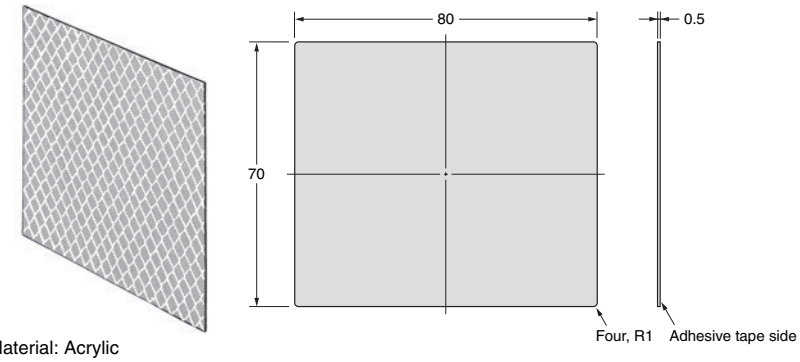

Material: Acrylic

Mutual Interference Prevention Filter for E3T-ST3□/ST1□ Through-beam Sensors

E39-E14

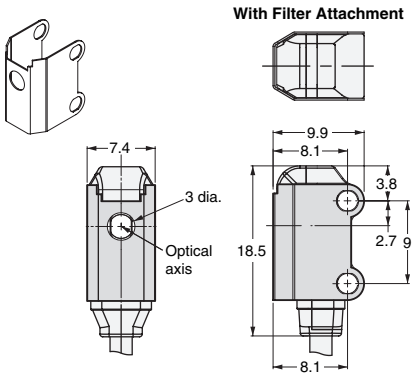

Material: 0.2-mm thick stainless steel (SUS301)

Slit for E3T-ST□□ Through-beam Sensors

E39-S63

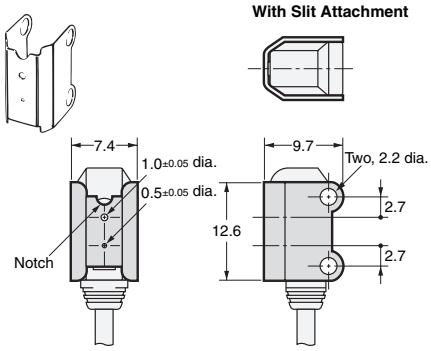

Material: 0.2-mm thick stainless steel (SUS301)

Note: Align the notch direction of the Slit when installing on the Emitter and Receiver.

Slit for E3T-FT□□ Through-beam Sensors

E39-S64

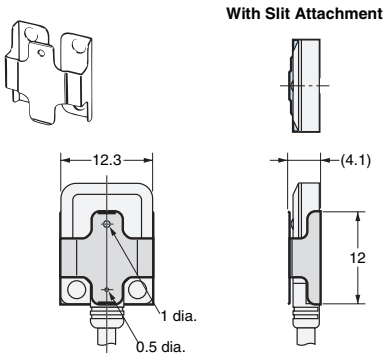

Material: 0.1-mm thick stainless steel (SUS301)

0.5-dia Slit for E3T-ST□□M Through-beam Sensors

E39-S76A

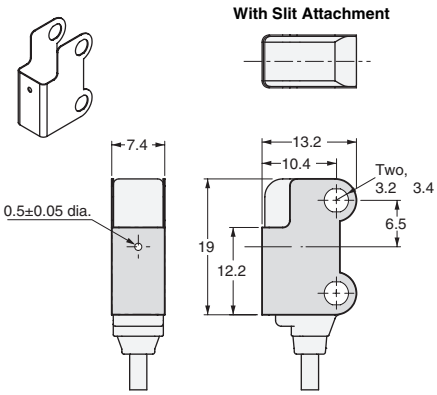

Material: 0.2-mm thick stainless steel (SUS301)

1-dia Slit for E3T-ST□□M Through-beam Sensors

E39-S76B

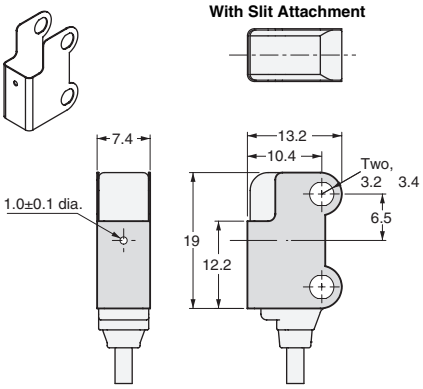

Material: 0.2-mm thick stainless steel (SUS301)

Sensitivity Adjustment Unit for E3T-ST1□/ST3□ Through-beam Sensors

E39-E10

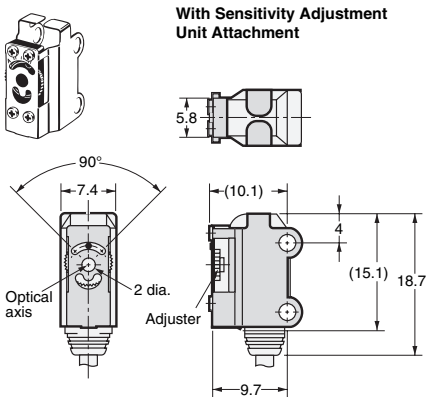

Material: stainless steel (SUS301)

Mounting Bracket for M2-mounting Side-view Sensors

E39-L116

Material: 1.2-mm-thick stainless steel (SUS304)

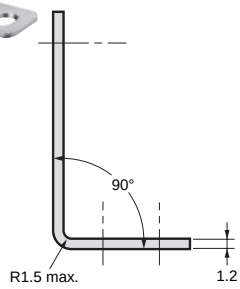

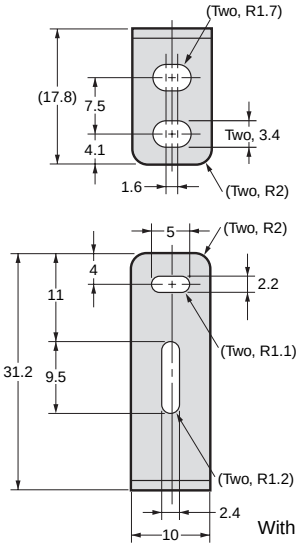

With Mounting Bracket (Example: E3T-ST11)

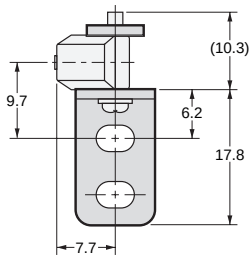

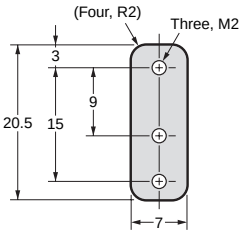

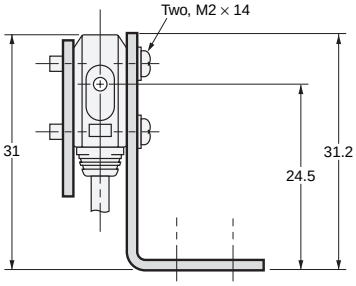

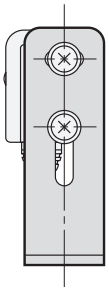

Mounting Bracket for M2-mounting Side-view Sensors

E39-L117

Material: 1.2-mm-thick stainless steel (SUS304)

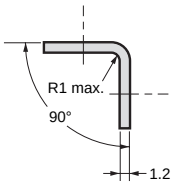

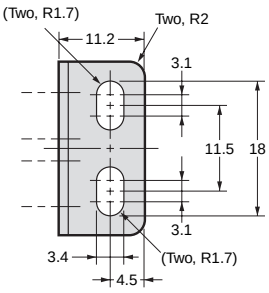

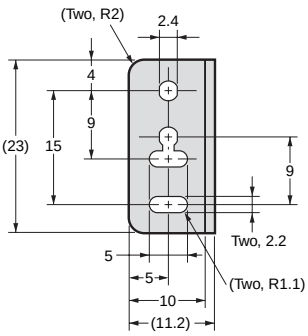

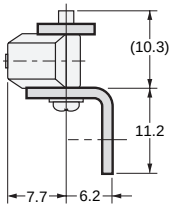

With Mounting Bracket (Example: E3T-ST11)

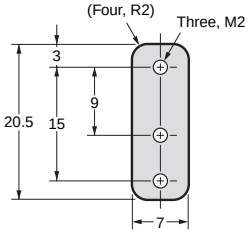

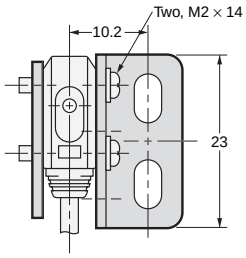

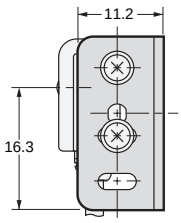

Mounting Bracket for M2-mounting Side-view Sensors

E39-L118

Material: 1.2-mm-thick stainless steel (SUS304)

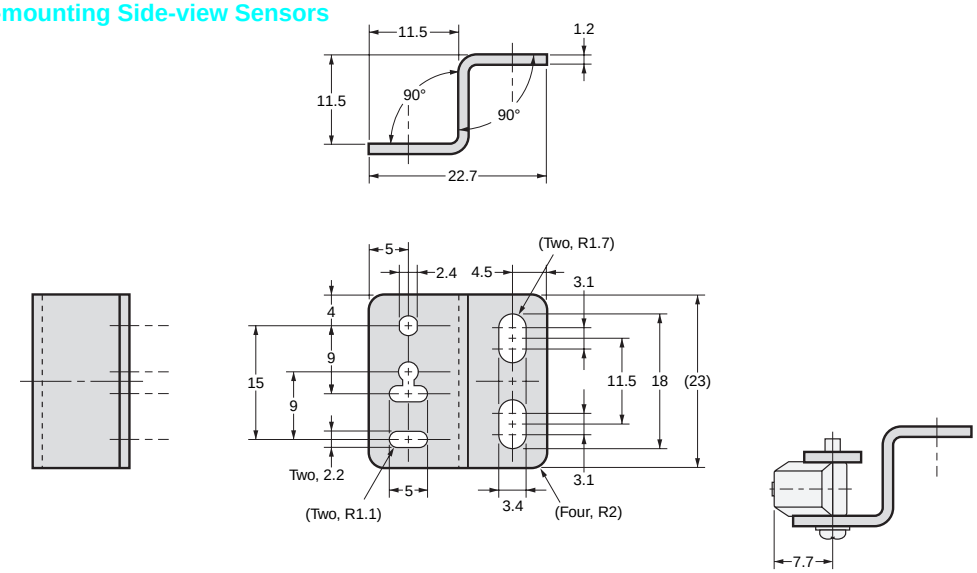

With Mounting Bracket (Example: E3T-ST11)

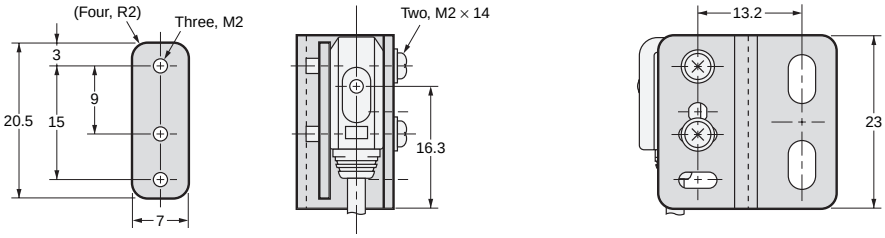

Mounting Bracket for M2-mounting Flat Sensors

E39-L119

Material: 1.2-mm-thick stainless steel (SUS304)

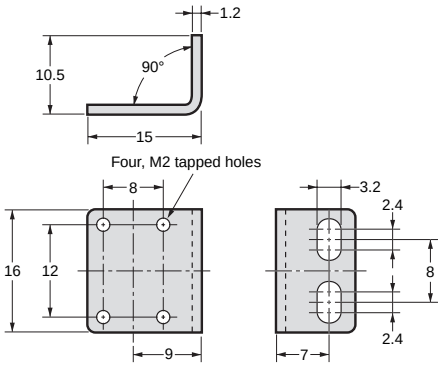

With Mounting Bracket (Example: E3T-FT11)

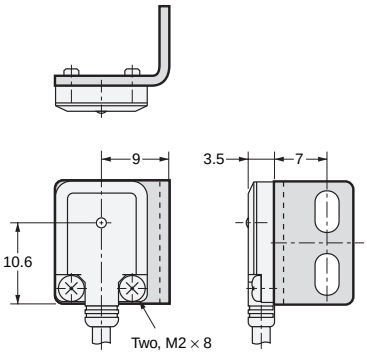

Mounting Bracket for M2-mounting Flat Sensors

E39-L120

Material: 1.2-mm-thick stainless steel (SUS304)

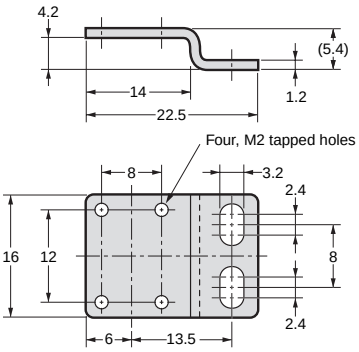

With Mounting Bracket (Example: E3T-FT11)

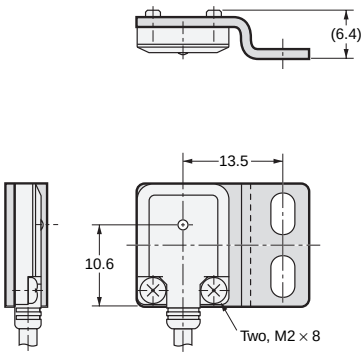

Mounting Bracket for M3-mounting Side-view Sensors

E39-L166

Material: 1.2-mm-thick stainless steel (SUS304)

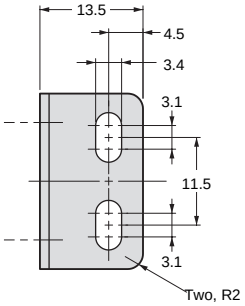

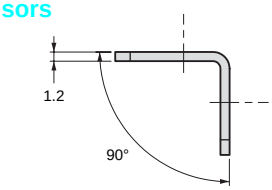

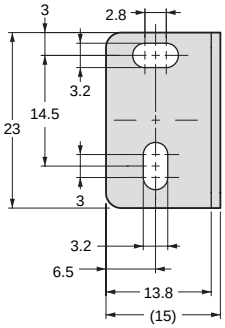

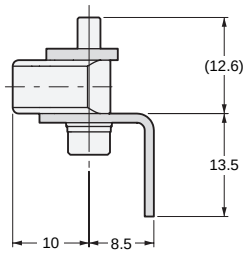

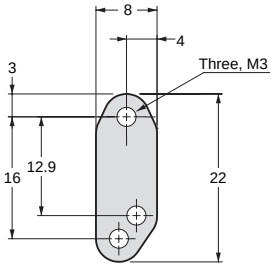

With Mounting Bracket
(Example: E3T-ST11M)

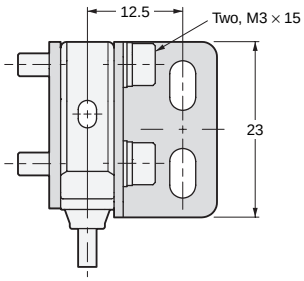

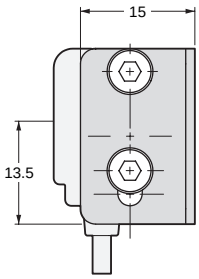

Mounting Bracket for M3-mounting Flat Sensors

E39-L167

Material: 1.5-mm-thick stainless steel (SUS304)

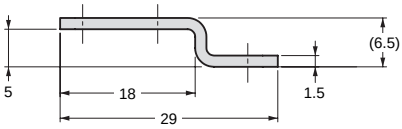

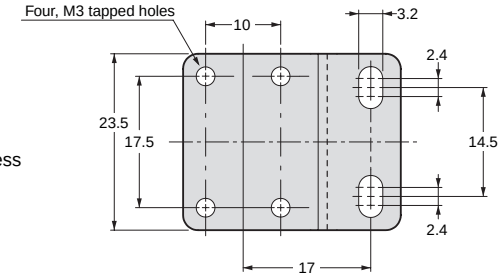

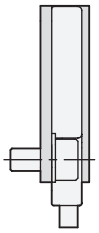

With Mounting Bracket
(Example: E3T-FD11M)

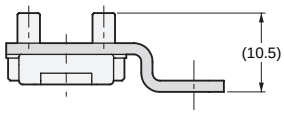

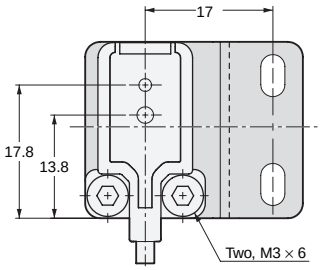

Back-mounting Spacer for M3-mounting Flat Sensors

E39-L168

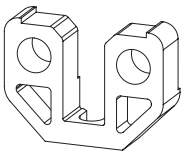

Material: PBT (polybutylene terephthalate)

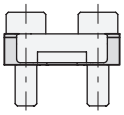

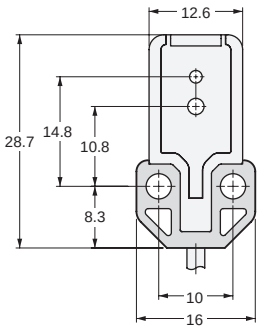

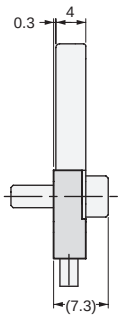

Note: Use this Spacer when mounting the Sensor from the back.

READ AND UNDERSTAND THIS DOCUMENT

Please read and understand this document before using the products. Please consult your OMRON representative if you have any questions or comments.

WARRANTY

OMRON's exclusive warranty is that the products are free from defects in materials and workmanship for a period of one year (or other period if specified) from date of sale by OMRON.

OMRON MAKES NO WARRANTY OR REPRESENTATION, EXPRESS OR IMPLIED, REGARDING NON-INFRINGEMENT, MERCHANTABILITY, OR FITNESS FOR PARTICULAR PURPOSE OF THE PRODUCTS. ANY BUYER OR USER ACKNOWLEDGES THAT THE BUYER OR USER ALONE HAS DETERMINED THAT THE PRODUCTS WILL SUITABLY MEET THE REQUIREMENTS OF THEIR INTENDED USE. OMRON DISCLAIMS ALL OTHER WARRANTIES, EXPRESS OR IMPLIED.

LIMITATIONS OF LIABILITY

OMRON SHALL NOT BE RESPONSIBLE FOR SPECIAL, INDIRECT, OR CONSEQUENTIAL DAMAGES, LOSS OF PROFITS OR COMMERCIAL LOSS IN ANY WAY CONNECTED WITH THE PRODUCTS, WHETHER SUCH CLAIM IS BASED ON CONTRACT, WARRANTY, NEGLIGENCE, OR STRICT LIABILITY.

In no event shall responsibility of OMRON for any act exceed the individual price of the product on which liability is asserted.

IN NO EVENT SHALL OMRON BE RESPONSIBLE FOR WARRANTY, REPAIR, OR OTHER CLAIMS REGARDING THE PRODUCTS UNLESS OMRON'S ANALYSIS CONFIRMS THAT THE PRODUCTS WERE PROPERLY HANDLED, STORED, INSTALLED, AND MAINTAINED AND NOT SUBJECT TO CONTAMINATION, ABUSE, MISUSE, OR INAPPROPRIATE MODIFICATION OR REPAIR.

SUITABILITY FOR USE

THE PRODUCTS CONTAINED IN THIS DOCUMENT ARE NOT SAFETY RATED. THEY ARE NOT DESIGNED OR RATED FOR ENSURING SAFETY OF PERSONS, AND SHOULD NOT BE RELIED UPON AS A SAFETY COMPONENT OR PROTECTIVE DEVICE FOR SUCH PURPOSES. Please refer to separate catalogs for OMRON's safety rated products.

OMRON shall not be responsible for conformity with any standards, codes, or regulations that apply to the combination of products in the customer's application or use of the product.

At the customer's request, OMRON will provide applicable third party certification documents identifying ratings and limitations of use that apply to the products. This information by itself is not sufficient for a complete determination of the suitability of the products in combination with the end product, machine, system, or other application or use.

The following are some examples of applications for which particular attention must be given. This is not intended to be an exhaustive list of all possible uses of the products, nor is it intended to imply that the uses listed may be suitable for the products:

- Outdoor use, uses involving potential chemical contamination or electrical interference, or conditions or uses not described in this document.
- Nuclear energy control systems, combustion systems, railroad systems, aviation systems, medical equipment, amusement machines, vehicles, safety equipment, and installations subject to separate industry or government regulations.
- Systems, machines, and equipment that could present a risk to life or property.

Please know and observe all prohibitions of use applicable to the products.

NEVER USE THE PRODUCTS FOR AN APPLICATION INVOLVING SERIOUS RISK TO LIFE OR PROPERTY WITHOUT ENSURING THAT THE SYSTEM AS A WHOLE HAS BEEN DESIGNED TO ADDRESS THE RISKS, AND THAT THE OMRON PRODUCT IS PROPERLY RATED AND INSTALLED FOR THE INTENDED USE WITHIN THE OVERALL EQUIPMENT OR SYSTEM.

PERFORMANCE DATA

Performance data given in this document is provided as a guide for the user in determining suitability and does not constitute a warranty. It may represent the result of OMRON's test conditions, and the users must correlate it to actual application requirements. Actual performance is subject to the OMRON Warranty and Limitations of Liability.

CHANGE IN SPECIFICATIONS

Product specifications and accessories may be changed at any time based on improvements and other reasons.

It is our practice to change model numbers when published ratings or features are changed, or when significant construction changes are made. However, some specifications of the product may be changed without any notice. When in doubt, special model numbers may be assigned to fix or establish key specifications for your application on your request. Please consult with your OMRON representative at any time to confirm actual specifications of purchased products.

DIMENSIONS AND WEIGHTS

Dimensions and weights are nominal and are not to be used for manufacturing purposes, even when tolerances are shown.

ERRORS AND OMISSIONS

The information in this document has been carefully checked and is believed to be accurate; however, no responsibility is assumed for clerical, typographical, or proofreading errors, or omissions.

PROGRAMMABLE PRODUCTS

OMRON shall not be responsible for the user's programming of a programmable product, or any consequence thereof.

COPYRIGHT AND COPY PERMISSION

This document shall not be copied for sales or promotions without permission.

This document is protected by copyright and is intended solely for use in conjunction with the product. Please notify us before copying or reproducing this document in any manner, for any other purpose. If copying or transmitting this document to another, please copy or transmit it in its entirety.

OMRON Corporation **Industrial Automation Company**
Tokyo, JAPAN

Contact: www.ia.omron.com

Regional Headquarters
OMRON EUROPE B.V.
Sensor Business Unit
Carl-Benz-Str. 4, D-71154 Nufringen, Germany
Tel: (49) 7032-811-0/Fax: (49) 7032-811-199

OMRON ELECTRONICS LLC
One Commerce Drive Schaumburg,
IL 60173-5302 U.S.A.
Tel: (1) 847-843-7900/Fax: (1) 847-843-7787

OMRON ASIA PACIFIC PTE. LTD.
No. 438A Alexandra Road # 05-05/08 (Lobby 2),
Alexandra Technopark,
Singapore 119967
Tel: (65) 6835-3011/Fax: (65) 6835-2711

OMRON (CHINA) CO., LTD.
Room 2211, Bank of China Tower,
200 Yin Cheng Zhong Road,
PuDong New Area, Shanghai, 200120, China
Tel: (86) 21-5037-2222/Fax: (86) 21-5037-2200

Authorized Distributor:

© OMRON Corporation 2010 All Rights Reserved.
In the interest of product improvement,
specifications are subject to change without notice.

CSM_3_1_1210
Cat. No. E407-E1-01
Printed in Japan
(1010)

Mouser Electronics

Authorized Distributor

Click to View Pricing, Inventory, Delivery & Lifecycle Information:

Omron:

E3T-ST24 2M E3T-SR44 2M

OCEAN CHIPS
Океан Электроники
Поставка электронных компонентов

Компания «Океан Электроники» предлагает заключение долгосрочных отношений при поставках импортных электронных компонентов на взаимовыгодных условиях!

Наши преимущества:

- Поставка оригинальных импортных электронных компонентов напрямую с производств Америки, Европы и Азии, а так же с крупнейших складов мира;
- Широкая линейка поставок активных и пассивных импортных электронных компонентов (более 30 млн. наименований);
- Поставка сложных, дефицитных, либо снятых с производства позиций;
- Оперативные сроки поставки под заказ (от 5 рабочих дней);
- Экспресс доставка в любую точку России;
- Помощь Конструкторского Отдела и консультации квалифицированных инженеров;
- Техническая поддержка проекта, помощь в подборе аналогов, поставка прототипов;
- Поставка электронных компонентов под контролем ВП;
- Система менеджмента качества сертифицирована по Международному стандарту ISO 9001;
- При необходимости вся продукция военного и аэрокосмического назначения проходит испытания и сертификацию в лаборатории (по согласованию с заказчиком);
- Поставка специализированных компонентов военного и аэрокосмического уровня качества (Xilinx, Altera, Analog Devices, Intersil, Interpoint, Microsemi, Actel, Aeroflex, Peregrine, VPT, Syfer, Eurofarad, Texas Instruments, MS Kennedy, Miteq, Cobham, E2V, MA-COM, Hittite, Mini-Circuits, General Dynamics и др.);

Компания «Океан Электроники» является официальным дистрибьютором и эксклюзивным представителем в России одного из крупнейших производителей разъемов военного и аэрокосмического назначения **«JONHON»**, а так же официальным дистрибьютором и эксклюзивным представителем в России производителя высокотехнологичных и надежных решений для передачи СВЧ сигналов **«FORSTAR»**.

AVIC JONHON

«JONHON» (основан в 1970 г.)

Разъемы специального, военного и аэрокосмического назначения:

(Применяются в военной, авиационной, аэрокосмической, морской, железнодорожной, горно- и нефтедобывающей отраслях промышленности)

«FORSTAR» (основан в 1998 г.)

ВЧ соединители, коаксиальные кабели, кабельные сборки и микроволновые компоненты:

(Применяются в телекоммуникациях гражданского и специального назначения, в средствах связи, РЛС, а так же военной, авиационной и аэрокосмической отраслях промышленности).

FORSTAR®

Телефон: 8 (812) 309-75-97 (многоканальный)
Факс: 8 (812) 320-03-32
Электронная почта: ocean@oceanchips.ru
Web: http://oceanchips.ru/
Адрес: 198099, г. Санкт-Петербург, ул. Калинина, д. 2, корп. 4, лит. А