# Virtex-II Pro and Virtex-II Pro X Platform FPGAs: Complete Data Sheet

DS083 (v5.0) June 21, 2011 **Product Specification**

## Module 1: Introduction and Overview

**10 pages**

- Summary of Features
- General Description
- Architecture
- IP Core and Reference Support
- Device/Package Combinations and Maximum I/O
- Ordering Information

## Module 2: Functional Description

**60 pages**

- Functional Description: RocketIO™ X Multi-Gigabit Transceiver
- Functional Description: RocketIO Multi-Gigabit Transceiver
- Functional Description: Processor Block
- Functional Description: PowerPC™ 405 Core
- Functional Description: FPGA
  - Input/Output Blocks (IOBs)
  - Digitally Controlled Impedance (DCI)
  - On-Chip Differential Termination
  - Configurable Logic Blocks (CLBs)
  - 3-State Buffers
  - CLB/Slice Configurations
  - 18-Kb Block SelectRAM™ Resources
  - 18-Bit x 18-Bit Multipliers
  - Global Clock Multiplexer Buffers
  - Digital Clock Manager (DCM)
- Routing
- Configuration

## Module 3: DC and Switching Characteristics

**59 pages**

- Electrical Characteristics
- Performance Characteristics
- Switching Characteristics
- Pin-to-Pin Output Parameter Guidelines
- Pin-to-Pin Input Parameter Guidelines
- DCM Timing Parameters
- Source-Synchronous Switching Characteristics

## Module 4: Pinout Information

**302 pages**

- Pin Definitions
- Pinout Tables
  - FG256/FGG256 Wire-Bond Fine-Pitch BGA Package
  - FG456/FGG456 Wire-Bond Fine-Pitch BGA Package
  - FG676/FGG676 Wire-Bond Fine-Pitch BGA Package
  - FF672 Flip-Chip Fine-Pitch BGA Package
  - FF896 Flip-Chip Fine-Pitch BGA Package
  - FF1148 Flip-Chip Fine-Pitch BGA Package
  - FF1152 Flip-Chip Fine-Pitch BGA Package
  - FF1517 Flip-Chip Fine-Pitch BGA Package
  - FF1696 Flip-Chip Fine-Pitch BGA Package
  - FF1704 Flip-Chip Fine-Pitch BGA Package

IMPORTANT NOTE: *Page, figure, and table numbers begin at 1 for each module, and each module has its own Revision History at the end. Use the PDF "Bookmarks" pane for easy navigation in this volume.*

© 2000–2011 Xilinx, Inc. All rights reserved. XILINX, the Xilinx logo, the Brand Window, and other designated brands included herein are trademarks of Xilinx, Inc. PowerPC is a trademark of IBM Corp. and is used under license. All other trademarks are the property of their respective owners.

# Virtex-II Pro and Virtex-II Pro X Platform FPGAs: Introduction and Overview

DS083 (v5.0) June 21, 2011 **Product Specification**

## Summary of Virtex-II Pro™ / Virtex-II Pro X Features

- High-Performance Platform FPGA Solution, Including
  - Up to twenty RocketIO™ or RocketIO X embedded Multi-Gigabit Transceivers (MGTs)
  - Up to two IBM PowerPC™ RISC processor blocks
- Based on Virtex-II™ Platform FPGA Technology
  - Flexible logic resources
  - SRAM-based in-system configuration
  - Active Interconnect technology
  - SelectRAM™+ memory hierarchy
  - Dedicated 18-bit x 18-bit multiplier blocks
  - High-performance clock management circuitry
  - SelectI/O™-Ultra technology
  - XCITE Digitally Controlled Impedance (DCI) I/O

Virtex-II Pro / Virtex-II Pro X family members and resources are shown in Table 1.

*Table 1:* **Virtex-II Pro / Virtex-II Pro X FPGA Family Members**

| Device[1] | RocketIO Transceiver Blocks | PowerPC Processor Blocks | Logic Cells[2] | CLB (1 = 4 slices = max 128 bits) | | 18 X 18 Bit Multiplier Blocks | Block SelectRAM+ | | DCMs | Maximum User I/O Pads |
|---|---|---|---|---|---|---|---|---|---|---|
| | | | | Slices | Max Distr RAM (Kb) | | 18 Kb Blocks | Max Block RAM (Kb) | | |
| XC2VP2 | 4 | 0 | 3,168 | 1,408 | 44 | 12 | 12 | 216 | 4 | 204 |
| XC2VP4 | 4 | 1 | 6,768 | 3,008 | 94 | 28 | 28 | 504 | 4 | 348 |
| XC2VP7 | 8 | 1 | 11,088 | 4,928 | 154 | 44 | 44 | 792 | 4 | 396 |
| XC2VP20 | 8 | 2 | 20,880 | 9,280 | 290 | 88 | 88 | 1,584 | 8 | 564 |
| XC2VPX20 | 8[4] | 1 | 22,032 | 9,792 | 306 | 88 | 88 | 1,584 | 8 | 552 |
| XC2VP30 | 8 | 2 | 30,816 | 13,696 | 428 | 136 | 136 | 2,448 | 8 | 644 |
| XC2VP40 | 0[3], 8, or 12 | 2 | 43,632 | 19,392 | 606 | 192 | 192 | 3,456 | 8 | 804 |
| XC2VP50 | 0[3] or 16 | 2 | 53,136 | 23,616 | 738 | 232 | 232 | 4,176 | 8 | 852 |
| XC2VP70 | 16 or 20 | 2 | 74,448 | 33,088 | 1,034 | 328 | 328 | 5,904 | 8 | 996 |
| XC2VPX70 | 20[4] | 2 | 74,448 | 33,088 | 1,034 | 308 | 308 | 5,544 | 8 | 992 |
| XC2VP100 | 0[3] or 20 | 2 | 99,216 | 44,096 | 1,378 | 444 | 444 | 7,992 | 12 | 1,164 |

**Notes:**
1. -7 speed grade devices are not available in Industrial grade.
2. Logic Cell ≈ (1) 4-input LUT + (1)FF + Carry Logic
3. These devices can be ordered in a configuration without RocketIO transceivers. See Table 3 for package configurations.
4. Virtex-II Pro X devices equipped with RocketIO X transceiver cores.

## RocketIO X Transceiver Features (XC2VPX20 and XC2VPX70 Only)

- Variable-Speed Full-Duplex Transceiver (XC2VPX20) Allowing 2.488 Gb/s to 6.25 Gb/s Baud Transfer Rates.
  - Includes specific baud rates used by various standards, as listed in Table 4, Module 2.
- Fixed-Speed Full-Duplex Tranceiver (XC2VPX70) Operating at 4.25 Gb/s Baud Transfer Rate.
- Eight or Twenty Transceiver Modules on an FPGA, Depending upon Device
- Monolithic Clock Synthesis and Clock Recovery
  - Eliminates the need for external components
- Automatic Lock-to-Reference Function
- Programmable Serial Output Differential Swing
  - 200 mV to 1600 mV, peak-peak
  - Allows compatibility with other serial system voltage levels
- Programmable Pre-emphasis Levels 0 to 500%
- Telecom/Datacom Support Modes
  - "x8" and "x10" clocking/data paths
  - 64B/66B clocking support

© 2000–2011 Xilinx, Inc. All rights reserved. XILINX, the Xilinx logo, the Brand Window, and other designated brands included herein are trademarks of Xilinx, Inc. PowerPC is a trademark of IBM Corp. and is used under license. All other trademarks are the property of their respective owners.

- Programmable Receiver Equalization
- Internal AC Coupling
- On-Chip 50Ω Termination
  - Eliminates the need for external termination resistors
- Pre- and Post-Driver Serial and Parallel TX-to-RX Internal Loopback Modes for Testing Operability
- Programmable Comma Detection
  - Allows for any protocol
  - Allows for detection of any 10-bit character
- 8B/10B and 64B/66B Encoding Blocks

## RocketIO Transceiver Features (All Except XC2VPX20 and XC2VPX70)

- Full-Duplex Serial Transceiver (SERDES) Capable of Baud Rates from 600 Mb/s to 3.125 Gb/s
- 100 Gb/s Duplex Data Rate (20 Channels)
- Monolithic Clock Synthesis and Clock Recovery (CDR)
- Fibre Channel, 10G Fibre Channel, Gigabit Ethernet, 10 Gb Attachment Unit Interface (XAUI), and Infiniband-Compliant Transceivers
- 8-, 16-, or 32-bit Selectable Internal FPGA Interface
- 8B/10B Encoder and Decoder (optional)
- 50Ω/75Ω on-chip Selectable Transmit and Receive Terminations
- Programmable Comma Detection
- Channel Bonding Support (from 2 to 20 Channels)
- Rate Matching via Insertion/Deletion Characters
- Four Levels of Selectable Pre-Emphasis
- Five Levels of Output Differential Voltage
- Per-Channel Internal Loopback Modes
- 2.5V Transceiver Supply Voltage

## PowerPC RISC Processor Block Features (All Except XC2VP2)

- Embedded 300+ MHz Harvard Architecture Block
- Low Power Consumption: 0.9 mW/MHz
- Five-Stage Data Path Pipeline
- Hardware Multiply/Divide Unit
- Thirty-Two 32-bit General Purpose Registers
- 16 KB Two-Way Set-Associative Instruction Cache
- 16 KB Two-Way Set-Associative Data Cache
- Memory Management Unit (MMU)
  - 64-entry unified Translation Look-aside Buffers (TLB)
  - Variable page sizes (1 KB to 16 MB)
- Dedicated On-Chip Memory (OCM) Interface
- Supports IBM CoreConnect™ Bus Architecture
- Debug and Trace Support
- Timer Facilities

## Virtex-II Pro Platform FPGA Technology (All Devices)

- SelectRAM+ Memory Hierarchy
  - Up to 8 Mb of True Dual-Port RAM in 18 Kb block SelectRAM+ resources
  - Up to 1,378 Kb of distributed SelectRAM+ resources
  - High-performance interfaces to external memory
- Arithmetic Functions
  - Dedicated 18-bit x 18-bit multiplier blocks
  - Fast look-ahead carry logic chains
- Flexible Logic Resources
  - Up to 88,192 internal registers/latches with Clock Enable
  - Up to 88,192 look-up tables (LUTs) or cascadable variable (1 to 16 bits) shift registers
  - Wide multiplexers and wide-input function support
  - Horizontal cascade chain and Sum-of-Products support
  - Internal 3-state busing
- High-Performance Clock Management Circuitry
  - Up to twelve Digital Clock Manager (DCM) modules
    - Precise clock de-skew
    - Flexible frequency synthesis
    - High-resolution phase shifting
  - 16 global clock multiplexer buffers in all parts
- Active Interconnect Technology
  - Fourth-generation segmented routing structure
  - Fast, predictable routing delay, independent of fanout
  - Deep sub-micron noise immunity benefits
- SelectIO™-Ultra Technology
  - Up to 1,164 user I/Os
  - Twenty-two single-ended standards and ten differential standards
  - Programmable LVCMOS sink/source current (2 mA to 24 mA) per I/O
  - XCITE Digitally Controlled Impedance (DCI) I/O
  - PCI/PCI-X support [1]
  - Differential signaling
    - 840 Mb/s Low-Voltage Differential Signaling I/O (LVDS) with current mode drivers
    - On-chip differential termination
    - Bus LVDS I/O

1. Refer to XAPP653 for more information.

  - HyperTransport (LDT) I/O with current driver buffers
  - Built-in DDR input and output registers
- Proprietary high-performance SelectLink technology for communications between Xilinx devices
  - High-bandwidth data path
  - Double Data Rate (DDR) link
  - Web-based HDL generation methodology
- SRAM-Based In-System Configuration
  - Fast SelectMAP™ configuration
  - Triple Data Encryption Standard (DES) security option (bitstream encryption)
  - IEEE 1532 support
  - Partial reconfiguration
  - Unlimited reprogrammability
  - Readback capability
- Supported by Xilinx Foundation™ and Alliance Series™ Development Systems
  - Integrated VHDL and Verilog design flows
  - ChipScope™ Integrated Logic Analyzer
- 0.13 µm Nine-Layer Copper Process with 90 nm High-Speed Transistors
- 1.5V ($V_{CCINT}$) core power supply, dedicated 2.5V $V_{CCAUX}$ auxiliary and $V_{CCO}$ I/O power supplies
- IEEE 1149.1 Compatible Boundary-Scan Logic Support
- Flip-Chip and Wire-Bond Ball Grid Array (BGA) Packages in Standard 1.00 mm Pitch.
- Wire-Bond BGA Devices Available in Pb-Free Packaging (**www.xilinx.com/pbfree)**
- Each Device 100% Factory Tested

## General Description

The Virtex-II Pro and Virtex-II Pro X families contain platform FPGAs for designs that are based on IP cores and customized modules. The family incorporates multi-gigabit transceivers and PowerPC CPU blocks in Virtex-II Pro Series FPGA architecture. It empowers complete solutions for telecommunication, wireless, networking, video, and DSP applications.

The leading-edge 0.13 µm CMOS nine-layer copper process and Virtex-II Pro architecture are optimized for high performance designs in a wide range of densities. Combining a wide variety of flexible features and IP cores, the Virtex-II Pro family enhances programmable logic design capabilities and is a powerful alternative to mask-programmed gate arrays.

## Architecture

### Array Overview

Virtex-II Pro and Virtex-II Pro X devices are user-programmable gate arrays with various configurable elements and embedded blocks optimized for high-density and high-performance system designs. Virtex-II Pro devices implement the following functionality:

- Embedded high-speed serial transceivers enable data bit rate up to 3.125 Gb/s per channel (RocketIO) or 6.25 Gb/s (RocketIO X).
- Embedded IBM PowerPC 405 RISC processor blocks provide performance up to 400 MHz.
- SelectIO-Ultra blocks provide the interface between package pins and the internal configurable logic. Most popular and leading-edge I/O standards are supported by the programmable IOBs.
- Configurable Logic Blocks (CLBs) provide functional elements for combinatorial and synchronous logic, including basic storage elements. BUFTs (3-state buffers) associated with each CLB element drive dedicated segmentable horizontal routing resources.
- Block SelectRAM+ memory modules provide large 18 Kb storage elements of True Dual-Port RAM.
- Embedded multiplier blocks are 18-bit x 18-bit dedicated multipliers.
- Digital Clock Manager (DCM) blocks provide self-calibrating, fully digital solutions for clock distribution delay compensation, clock multiplication and division, and coarse- and fine-grained clock phase shifting.

A new generation of programmable routing resources called Active Interconnect Technology interconnects all these elements. The general routing matrix (GRM) is an array of routing switches. Each programmable element is tied to a switch matrix, allowing multiple connections to the general routing matrix. The overall programmable interconnection is hierarchical and supports high-speed designs.

All programmable elements, including the routing resources, are controlled by values stored in static memory cells. These values are loaded in the memory cells during configuration and can be reloaded to change the functions of the programmable elements.

### Features

This section briefly describes Virtex-II Pro / Virtex-II Pro X features. For more details, refer to Virtex-II Pro and Virtex-II Pro X Platform FPGAs: Functional Description.

#### *RocketIO / RocketIO X MGT Cores*

The RocketIO and RocketIO X Multi-Gigabit Transceivers are flexible parallel-to-serial and serial-to-parallel embedded transceiver cores used for high-bandwidth interconnection between buses, backplanes, or other subsystems.

Multiple user instantiations in an FPGA are possible, providing up to 100 Gb/s (RocketIO) or 170 Gb/s (RocketIO X) of full-duplex raw data transfer. Each channel can be operated at a maximum data transfer rate of 3.125 Gb/s (RocketIO) or 6.25 Gb/s (RocketIO X).

Each RocketIO or RocketIO X core implements the following technology:

- Serializer and deserializer (SERDES)
- Monolithic clock synthesis and clock recovery (CDR)
- 10 Gigabit Attachment Unit Interface (XAUI) Fibre Channel (3.1875 Gb/s XAUI), Infiniband, PCI Express, Aurora, SXI-5 (SFI-5,/SPI-5), and OC-48 compatibility[1]
- 8/16/32-bit (RocketIO) or 8/16/32/64-bit (RocketIO X) selectable FPGA interface
- 8B/10B (RocketIO) or 8B/10B and 64B/66B (RocketIO X) encoder and decoder with bypassing option on each channel
- Channel bonding support (two to twenty channels)
  - Elastic buffers for inter-chip deskewing and channel-to-channel alignment
- Receiver clock recovery tolerance of up to 75 non-transitioning bits
- 50Ω (RocketIO X) or 50Ω /75Ω selectable (RocketIO) on-chip transmit and receive terminations
- Programmable comma detection and word alignment
- Rate matching via insertion/deletion characters
- Automatic lock-to-reference function
- Programmable pre-emphasis support
- Per-channel serial and parallel transmitter-to-receiver internal loopback modes
- Optional transmit and receive data inversion
- Cyclic Redundancy Check support (RocketIO only)

### *PowerPC 405 Processor Block*

The PPC405 RISC CPU can execute instructions at a sustained rate of one instruction per cycle. On-chip instruction and data cache reduce design complexity and improve system throughput.

The PPC405 features include:

- PowerPC RISC CPU
  - Implements the PowerPC User Instruction Set Architecture (UISA) and extensions for embedded applications
  - Thirty-two 32-bit general purpose registers (GPRs)
  - Static branch prediction
  - Five-stage pipeline with single-cycle execution of most instructions, including loads/stores
  - Unaligned and aligned load/store support to cache, main memory, and on-chip memory
  - Hardware multiply/divide for faster integer arithmetic (4-cycle multiply, 35-cycle divide)
  - Enhanced string and multiple-word handling
  - Big/little endian operation support
- Storage Control
  - Separate instruction and data cache units, both two-way set-associative and non-blocking
  - Eight words (32 bytes) per cache line
  - 16 KB array Instruction Cache Unit (ICU), 16 KB array Data Cache Unit (DCU)
  - Operand forwarding during instruction cache line fill
  - Copy-back or write-through DCU strategy
  - Doubleword instruction fetch from cache improves branch latency
- Virtual mode memory management unit (MMU)
  - Translation of the 4 GB logical address space into physical addresses
  - Software control of page replacement strategy
  - Supports multiple simultaneous page sizes ranging from 1 KB to 16 MB
- OCM controllers provide dedicated interfaces between Block SelectRAM+ memory and processor block instruction and data paths for high-speed access
- PowerPC timer facilities
  - 64-bit time base
  - Programmable interval timer (PIT)
  - Fixed interval timer (FIT)
  - Watchdog timer (WDT)
- Debug Support
  - Internal debug mode
  - External debug mode
  - Debug Wait mode
  - Real Time Trace debug mode
  - Enhanced debug support with logical operators
  - Instruction trace and trace-back support
  - Forward or backward trace
- Two hardware interrupt levels support
- Advanced power management support

### *Input/Output Blocks (IOBs)*

IOBs are programmable and can be categorized as follows:

- Input block with an optional single data rate (SDR) or double data rate (DDR) register
- Output block with an optional SDR or DDR register and an optional 3-state buffer to be driven directly or through an SDR or DDR register
- Bidirectional block (any combination of input and output configurations)

These registers are either edge-triggered D-type flip-flops or level-sensitive latches.

IOBs support the following single-ended I/O standards:

- LVTTL, LVCMOS (3.3V,[2] 2.5V, 1.8V, and 1.5V)
- PCI-X compatible (133 MHz and 66 MHz) at 3.3V[3]
- PCI compliant (66 MHz and 33 MHz) at 3.3V[3]
- GTL and GTLP

1. Refer to Table 4, Module 2 for detailed information about RocketIO and RocketIO X transceiver compatible protocols.
2. Refer to **XAPP659** for more information.
3. Refer to **XAPP653** for more information.

- HSTL (1.5V and 1.8V, Class I, II, III, and IV)
- SSTL (1.8V and 2.5V, Class I and II)

The DCI I/O feature automatically provides on-chip termination for each single-ended I/O standard.

The IOB elements also support the following differential signaling I/O standards:

- LVDS and Extended LVDS (2.5V)
- BLVDS (Bus LVDS)
- ULVDS
- LDT
- LVPECL (2.5V)

Two adjacent pads are used for each differential pair. Two or four IOBs connect to one switch matrix to access the routing resources. On-chip differential termination is available for LVDS, LVDS Extended, ULVDS, and LDT standards.

### Configurable Logic Blocks (CLBs)

CLB resources include four slices and two 3-state buffers. Each slice is equivalent and contains:

- Two function generators (F & G)
- Two storage elements
- Arithmetic logic gates
- Large multiplexers
- Wide function capability
- Fast carry look-ahead chain
- Horizontal cascade chain (OR gate)

The function generators F & G are configurable as 4-input look-up tables (LUTs), as 16-bit shift registers, or as 16-bit distributed SelectRAM+ memory.

In addition, the two storage elements are either edge-triggered D-type flip-flops or level-sensitive latches.

Each CLB has internal fast interconnect and connects to a switch matrix to access general routing resources.

### Block SelectRAM+ Memory

The block SelectRAM+ memory resources are 18 Kb of True Dual-Port RAM, programmable from 16K x 1 bit to 512 x 36 bit, in various depth and width configurations. Each port is totally synchronous and independent, offering three "read-during-write" modes. Block SelectRAM+ memory is cascadable to implement large embedded storage blocks. Supported memory configurations for dual-port and single-port modes are shown in Table 2.

*Table 2:* **Dual-Port and Single-Port Configurations**

| | | |
|---|---|---|
| 16K x 1 bit | 4K x 4 bits | 1K x 18 bits |
| 8K x 2 bits | 2K x 9 bits | 512 x 36 bits |

### 18 X 18 Bit Multipliers

A multiplier block is associated with each SelectRAM+ memory block. The multiplier block is a dedicated 18 x 18-bit 2s complement signed multiplier, and is optimized for operations based on the block SelectRAM+ content on one port. The 18 x 18 multiplier can be used independently of the block SelectRAM+ resource. Read/multiply/accumulate operations and DSP filter structures are extremely efficient.

Both the SelectRAM+ memory and the multiplier resource are connected to four switch matrices to access the general routing resources.

### Global Clocking

The DCM and global clock multiplexer buffers provide a complete solution for designing high-speed clock schemes.

Up to twelve DCM blocks are available. To generate deskewed internal or external clocks, each DCM can be used to eliminate clock distribution delay. The DCM also provides 90-, 180-, and 270-degree phase-shifted versions of its output clocks. Fine-grained phase shifting offers high-resolution phase adjustments in increments of $^{1}/_{256}$ of the clock period. Very flexible frequency synthesis provides a clock output frequency equal to a fractional or integer multiple of the input clock frequency. For exact timing parameters, see Virtex-II Pro and Virtex-II Pro X Platform FPGAs: DC and Switching Characteristics.

Virtex-II Pro devices have 16 global clock MUX buffers, with up to eight clock nets per quadrant. Each clock MUX buffer can select one of the two clock inputs and switch glitch-free from one clock to the other. Each DCM can send up to four of its clock outputs to global clock buffers on the same edge. Any global clock pin can drive any DCM on the same edge.

### Routing Resources

The IOB, CLB, block SelectRAM+, multiplier, and DCM elements all use the same interconnect scheme and the same access to the global routing matrix. Timing models are shared, greatly improving the predictability of the performance of high-speed designs.

There are a total of 16 global clock lines, with eight available per quadrant. In addition, 24 vertical and horizontal long lines per row or column, as well as massive secondary and local routing resources, provide fast interconnect. Virtex-II Pro buffered interconnects are relatively unaffected by net fanout, and the interconnect layout is designed to minimize crosstalk.

Horizontal and vertical routing resources for each row or column include:

- 24 long lines
- 120 hex lines
- 40 double lines
- 16 direct connect lines (total in all four directions)

### Boundary Scan

Boundary-scan instructions and associated data registers support a standard methodology for accessing and configuring Virtex-II Pro devices, complying with IEEE standards 1149.1 and 1532. A system mode and a test mode are

implemented. In system mode, a Virtex-II Pro device will continue to function while executing non-test Boundary-Scan instructions. In test mode, Boundary-Scan test instructions control the I/O pins for testing purposes. The Virtex-II Pro Test Access Port (TAP) supports BYPASS, PRELOAD, SAMPLE, IDCODE, and USERCODE non-test instructions. The EXTEST, INTEST, and HIGHZ test instructions are also supported.

### *Configuration*

Virtex-II Pro / Virtex-II Pro devices are configured by loading the bitstream into internal configuration memory using one of the following modes:

- Slave-serial mode
- Master-serial mode
- Slave SelectMAP mode
- Master SelectMAP mode
- Boundary-Scan mode (IEEE 1532)

A Data Encryption Standard (DES) decryptor is available on-chip to secure the bitstreams. One or two triple-DES key sets can be used to optionally encrypt the configuration data.

The Xilinx System Advanced Configuration Enviornment (System ACE) family offers high-capacity and flexible solution for FPGA configuration as well as program/data storage for the processor. See **DS080**, *System ACE CompactFlash Solution* for more information.

### *Readback and Integrated Logic Analyzer*

Configuration data stored in Virtex-II Pro / Virtex-II Pro configuration memory can be read back for verification. Along with the configuration data, the contents of all flip-flops and latches, distributed SelectRAM+, and block SelectRAM+ memory resources can be read back. This capability is useful for real-time debugging.

The Xilinx ChipScope Integrated Logic Analyzer (ILA) cores and Integrated Bus Analyzer (IBA) cores, along with the ChipScope Pro Analyzer software, provide a complete solution for accessing and verifying user designs within Virtex-II Pro devices.

## IP Core and Reference Support

Intellectual Property is part of the Platform FPGA solution. In addition to the existing FPGA fabric cores, the list below shows some of the currently available hardware and software intellectual properties specially developed for Virtex-II Pro / Virtex-II Pro X by Xilinx. Each IP core is modular, portable, Real-Time Operating System (RTOS) independent, and CoreConnect compatible for ease of design migration. Refer to **www.xilinx.com/ipcenter** for the latest and most complete list of cores.

### Hardware Cores

- Bus Infrastructure cores (arbiters, bridges, and more)
- Memory cores (DDR, Flash, and more)
- Peripheral cores (UART, IIC, and more)
- Networking cores (ATM, Ethernet, and more)

### Software Cores

- Boot code
- Test code
- Device drivers
- Protocol stacks
- RTOS integration
- Customized board support package

## Virtex-II Pro / Virtex-II Pro X Device/Package Combinations and Maximum I/Os

Offerings include ball grid array (BGA) packages with 1.0 mm pitch. In addition to traditional wire-bond interconnect (FG/FGG packages), flip-chip interconnect (FF packages) is used in some of the BGA offerings. Flip-chip interconnect construction supports more I/Os than are possible in wire-bond versions of similar packages, providing a high pin count and excellent power dissipation.

The device/package combination table (Table 3) details the maximum number of user I/Os and RocketIO / RocketIO X MGTs for each device and package using wire-bond or flip-chip technology.

The FF1148 and FF1696 packages have no RocketIO transceivers bonded out. Extra SelectIO-Ultra resources occupy available pins in these packages, resulting in a higher user I/O count. These packages are available for the XC2VP40, XC2VP50, and XC2VP100 devices only.

The I/Os per package count includes all user I/Os except the 15 control pins (CCLK, DONE, M0, M1, M2, PROG_B, PWRDWN_B, TCK, TDI, TDO, TMS, HSWAP_EN, DXN, DXP, and RSVD), VBATT, and the RocketIO / RocketIO X transceiver pins.

*Table 3:* **Virtex-II Pro Device/Package Combinations and Maximum Number of Available I/Os**

| Package(1) | FG256/ FGG256 | FG456/ FGG456 | FG676 | FF672 | FF896 | FF1152 | FF1148 | FF1517 | FF1704 | FF1696 |
|---|---|---|---|---|---|---|---|---|---|---|
| **Pitch (mm)** | **1.00** | **1.00** | **1.00** | **1.00** | **1.00** | **1.00** | **1.00** | **1.00** | **1.00** | **1.00** |
| **Size (mm)** | **17 x 17** | **23 x 23** | **26 x 26** | **27 x 27** | **31 x 31** | **35 x 35** | **35 x 35** | **40 x 40** | **42.5 x 42.5** | **42.5 x 42.5** |
| XC2VP2 | 140 / 4 | 156 / 4 | | 204 / 4 | | | | | | |
| XC2VP4 | 140 / 4 | 248 / 4 | | 348 / 4 | | | | | | |
| XC2VP7 | | 248 / 8 | | 396 / 8 | 396 / 8 | | | | | |
| XC2VP20 | | | 404 / 8 | | 556 / 8 | 564 / 8 | | | | |
| XC2VPX20 | | | | | 552 / 8(2) | | | | | |
| XC2VP30 | | | 416 / 8 | | 556 / 8 | 644 / 8 | | | | |
| XC2VP40 | | | 416 / 8 | | | 692 / 12 | 804 / 0(3) | | | |
| XC2VP50 | | | | | | 692 / 16 | 812 / 0(3) | 852 / 16 | | |
| XC2VP70 | | | | | | | | 964 / 16 | 996 / 20 | |
| XC2VPX70 | | | | | | | | | 992 / 20(2) | |
| XC2VP100 | | | | | | | | | 1,040 / 20 | 1,164 / 0(3) |

**Notes:**
1. Wirebond packages FG256, FG456, and FG676 are also available in Pb-free versions FGG256, FGG456, and FGG676. See Virtex-II Pro Ordering Examples for details on how to order.
2. Virtex-II Pro X device is equipped with RocketIO X transceiver cores.
3. The RocketIO transceivers in devices in the FF1148 and FF1696 packages are not bonded out to the package pins.

## Maximum Performance

Maximum performance of the RocketIO / RocketIO X transceiver and the PowerPC processor block varies, depending on package style and speed grade. See Table 4 for details. Virtex-II Pro and Virtex-II Pro X Platform FPGAs: DC and Switching Characteristics contains the rest of the FPGA fabric performance parameters.

*Table 4:* **Maximum RocketIO / RocketIO X Transceiver and Processor Block Performance**

| Device | Speed Grade | | | Units |
|---|---|---|---|---|
| | -7(1) | -6 | -5 | |
| RocketIO X Transceiver FlipChip (FF) | N/A | 6.25(3) | 4.25(3) | Gb/s |
| RocketIO Transceiver FlipChip (FF) | 3.125 | 3.125 | 2.0 | Gb/s |
| RocketIO Transceiver Wirebond (FG) | 2.5 | 2.5 | 2.0 | Gb/s |
| PowerPC Processor Block | 400(2) | 350(2) | 300 | MHz |

**Notes:**
1. -7 speed grade devices are not available in Industrial grade.
2. **IMPORTANT!** When CPMC405CLOCK runs at speeds greater than 350 MHz in -7 Commercial grade dual-processor devices, or greater than 300 MHz in -6 Industrial grade dual-processor devices, users must implement the technology presented in **XAPP755**, "PowerPC 405 Clock Macro for -7(C) and -6(I) Speed Grade Dual-Processor Devices." Refer to Table 1 to identify dual-processor devices.
3. XC2VPX70 is only available at fixed 4.25 Gb/s baud rate.

## Virtex-II Pro Ordering Examples

Virtex-II Pro ordering examples are shown in Figure 1 (flip-chip package) and Figure 2 (Pb-free wire-bond package).

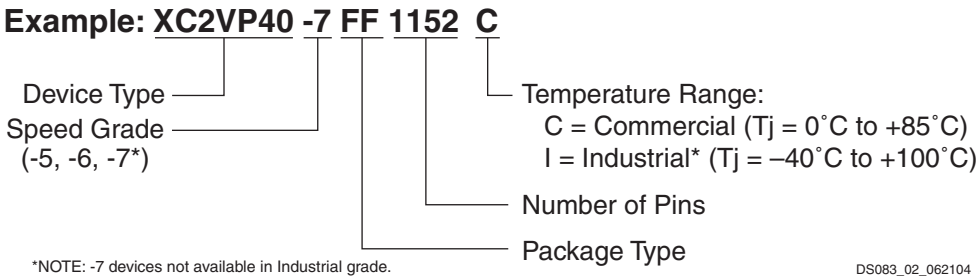


*Figure 1:* **Virtex-II Pro Ordering Example, Flip-Chip Package**

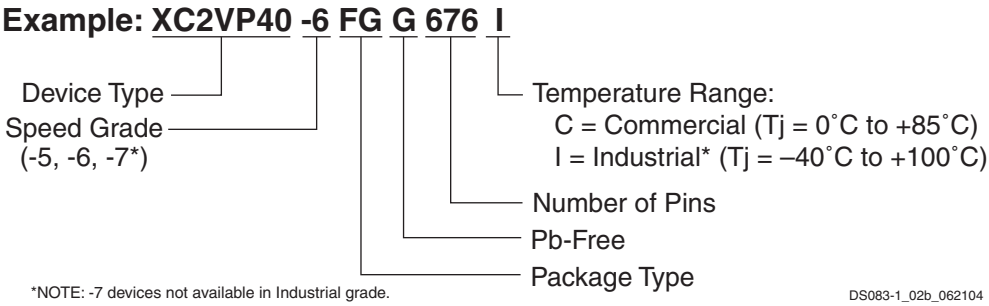


*Figure 2:* **Virtex-II Pro Ordering Example, Pb-Free Wire-Bond Package**

## Virtex-II Pro X Ordering Example

A Virtex-II Pro X ordering example is shown in Figure 3.

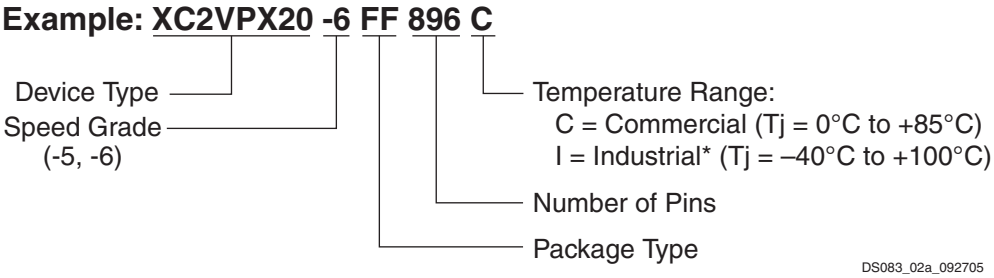


*Figure 3:* **Virtex-II Pro X Ordering Example, Flip-Chip Package**

## Revision History

This section records the change history for this module of the data sheet.

| Date | Version | Revision |
|---|---|---|
| 01/31/02 | 1.0 | Initial Xilinx release. |
| 06/13/02 | 2.0 | New Virtex-II Pro family members. New timing parameters per speedsfile **v1.62**. |
| 09/03/02 | 2.1 | Updates to Table 1 and Table 3. Processor Block information added to Table 4. |
| 09/27/02 | 2.2 | In Table 1, correct max number of XC2VP30 I/Os to 644. |
| 11/20/02 | 2.3 | Add bullet items for 3.3V I/O features. |
| 01/20/03 | 2.4 | • In Table 3, add FG676 package option for XC2VP20, XC2VP30, and XC2VP40.<br>• Remove FF1517 package option for XC2VP40. |
| 03/24/03 | 2.4.1 | • Correct number of single-ended I/O standards from 19 to 22.<br>• Correct minimum RocketIO serial speed from 622 Mbps to 600 Mbps. |
| 08/25/03 | 2.4.2 | • Add footnote referring to XAPP659 to callout for 3.3V I/O standards on page 4. |
| 12/10/03 | 3.0 | • XC2VP2 through XC2VP70 speed grades -5, -6, and -7, and XC2VP100 speed grades -5 and -6, are released to **Production status**. |
| 02/19/04 | 3.1 | • Table 1: Corrected number of RocketIO transceiver blocks for XC2VP40.<br>• Section Virtex-II Pro Platform FPGA Technology (All Devices): Updated number of differential standards supported from six to ten.<br>• Section Input/Output Blocks (IOBs): Added text stating that differential termination is available for LVDS, LVDS Extended, ULVDS, and LDT standards.<br>• Figure 1: Added note stating that -7 devices are not available in Industrial grade. |
| 03/09/04 | 3.1.1 | • Recompiled for backward compatibility with Acrobat 4 and above. No content changes. |
| 06/30/04 | 4.0 | Merged in DS110-1 (Module 1 of Virtex-II Pro X data sheet). Added information on available Pb-free packages. |
| 11/17/04 | 4.1 | *No changes in Module 1 for this revision.* |
| 03/01/05 | 4.2 | Table 3: Corrected number of RocketIO transceivers for XC2VP7-FG456. |
| 06/20/05 | 4.3 | *No changes in Module 1 for this revision.* |
| 09/15/05 | 4.4 | • Changed all instances of 10.3125 Gb/s (RocketIO transceiver maximum bit rate) to 6.25 Gb/s.<br>• Changed all instances of 412.5 Gb/s (RocketIO X transceiver maximum multi-channel raw data transfer rate) to 250 Gb/s. |
| 10/10/05 | 4.5 | • Changed XC2VPX70 variable baud rate specification to fixed-rate operation at 4.25 Gb/s.<br>• Changed maximum performance for -7 Virtex-II Pro X MGT (Table 4) to N/A. |
| 03/05/07 | 4.6 | *No changes in Module 1 for this revision.* |
| 11/05/07 | 4.7 | Updated copyright notice and legal disclaimer. |
| 06/21/11 | 5.0 | Added *Product Not Recommended for New Designs* banner. |

## Notice of Disclaimer

THE XILINX HARDWARE FPGA AND CPLD DEVICES REFERRED TO HEREIN (“PRODUCTS”) ARE SUBJECT TO THE TERMS AND CONDITIONS OF THE XILINX LIMITED WARRANTY WHICH CAN BE VIEWED AT http://www.xilinx.com/warranty.htm. THIS LIMITED WARRANTY DOES NOT EXTEND TO ANY USE OF PRODUCTS IN AN APPLICATION OR ENVIRONMENT THAT IS NOT WITHIN THE SPECIFICATIONS STATED IN THE XILINX DATA SHEET. ALL SPECIFICATIONS ARE SUBJECT TO CHANGE WITHOUT NOTICE. PRODUCTS ARE NOT DESIGNED OR INTENDED TO BE FAIL-SAFE OR FOR USE IN ANY APPLICATION REQUIRING FAIL-SAFE PERFORMANCE, SUCH AS LIFE-SUPPORT OR SAFETY DEVICES OR SYSTEMS, OR ANY OTHER APPLICATION THAT INVOKES THE POTENTIAL RISKS OF DEATH, PERSONAL INJURY, OR PROPERTY OR ENVIRONMENTAL DAMAGE (“CRITICAL APPLICATIONS”). USE OF PRODUCTS IN CRITICAL APPLICATIONS IS AT THE SOLE RISK OF CUSTOMER, SUBJECT TO APPLICABLE LAWS AND REGULATIONS.

## Virtex-II Pro Data Sheet

The Virtex-II Pro Data Sheet contains the following modules:

- Virtex-II Pro and Virtex-II Pro X Platform FPGAs: Introduction and Overview (Module 1)
- Virtex-II Pro and Virtex-II Pro X Platform FPGAs: Functional Description (Module 2)
- Virtex-II Pro and Virtex-II Pro X Platform FPGAs: DC and Switching Characteristics (Module 3)
- Virtex-II Pro and Virtex-II Pro X Platform FPGAs: Pinout Information (Module 4)

# Virtex-II Pro and Virtex-II Pro X Platform FPGAs: Functional Description

DS083 (v5.0) June 21, 2011 **Product Specification**

## Virtex-II Pro[1] Array Functional Description

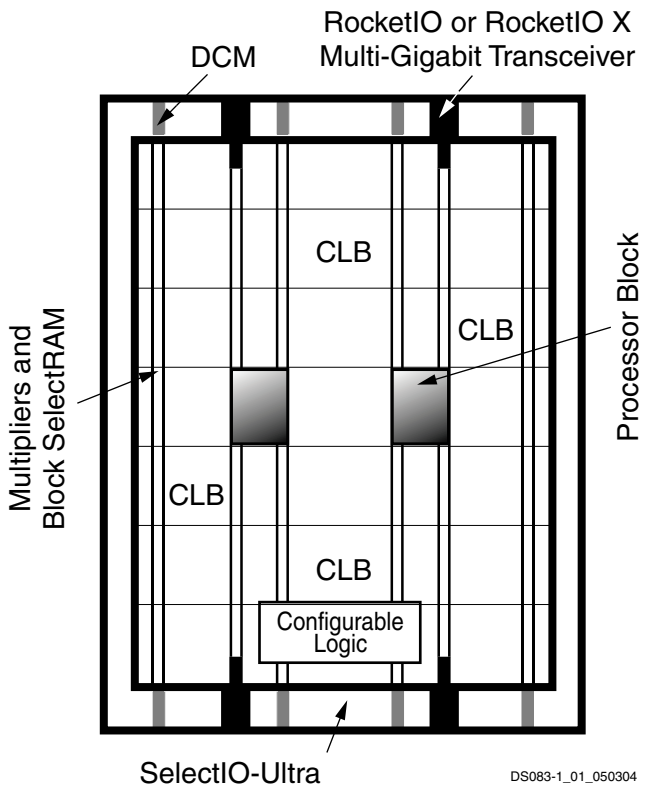


*Figure 1:* **Virtex-II Pro Generic Architecture Overview**

This module describes the following Virtex™-II Pro functional components, as shown in Figure 1:

- Embedded RocketIO™ (up to 3.125 Gb/s) or RocketIO X (up to 6.25 Gb/s) Multi-Gigabit Transceivers (MGTs)
- Processor blocks with embedded IBM PowerPC™ 405 RISC CPU core (PPC405) and integration circuitry.
- FPGA fabric based on Virtex-II architecture.

### Virtex-II Pro User Guides

Virtex-II Pro User Guides cover theory of operation in more detail, and include implementation details, primitives and attributes, command/instruction sets, and many HDL code examples where appropriate. All parameter specifications are given only in Module 3 of this Data Sheet.

These User Guides are available:

- For detailed descriptions of PPC405 embedded core programming models and internal core operations, see **PowerPC Processor Reference Guide** and **PowerPC 405 Processor Block Reference Guide**.
- For detailed RocketIO transceiver digital/analog design considerations, see **RocketIO Transceiver User Guide**.
- For detailed RocketIO X transceiver digital/analog design considerations, see **RocketIO X Transceiver User Guide**,
- For detailed descriptions of the FPGA fabric (CLB, IOB, DCM, etc.), see **Virtex-II Pro Platform FPGA User Guide**.

All of the documents above, as well as a complete listing and description of Xilinx-developed Intellectual Property cores for Virtex-II Pro, are available on the Xilinx website.

### Contents of This Module


- Functional Description: RocketIO X Multi-Gigabit Transceiver (MGT)
- Functional Description: RocketIO Multi-Gigabit Transceiver (MGT)
- Functional Description: Processor Block
- Functional Description: Embedded PowerPC 405 Core
- Functional Description: FPGA
- Revision History


### Virtex-II Pro Compared to Virtex-II Devices

Virtex-II Pro devices are built on the Virtex-II FPGA architecture. Most FPGA features are identical to Virtex-II devices. Major differences are described below:

- The Virtex-II Pro FPGA family is the first to incorporate embedded PPC405 and RocketIO/RocketIO X cores.
- $V_{CCAUX}$, the auxiliary supply voltage, is 2.5V instead of 3.3V as for Virtex-II devices. Advanced processing at 0.13 µm has resulted in a smaller die, faster speed, and lower power consumption.
- Virtex-II Pro devices are neither bitstream-compatible nor pin-compatible with Virtex-II devices. However, Virtex-II designs can be compiled into Virtex-II Pro devices.
- On-chip input LVDS differential termination is available.
- SSTL3, AGP-2X/AGP, LVPECL_33, LVDS_33, and LVDSEXT_33 standards are not supported.
- The open-drain output pin TDO does not have an internal pull-up resistor.

1. Unless otherwise noted, "Virtex-II Pro" refers to members of the Virtex-II Pro and/or Virtex-II Pro X families.

© 2000–2011 Xilinx, Inc. All rights reserved. XILINX, the Xilinx logo, the Brand Window, and other designated brands included herein are trademarks of Xilinx, Inc. PowerPC is a trademark of IBM Corp. and is used under license. All other trademarks are the property of their respective owners.

# Functional Description: RocketIO X Multi-Gigabit Transceiver (MGT)

This section summarizes the features of the RocketIO X multi-gigabit transceiver. For an in-depth discussion of the RocketIO X MGT, including digital and analog design considerations, refer to the **RocketIO X Transceiver User Guide.**

## RocketIO X Overview

Either eight or twenty RocketIO X MGTs are available on the XC2VPX20 and XC2VPX70 devices, respectively. The XC2VPX20 MGT is designed to operate at any baud rate in the range of 2.488 Gb/s to 6.25 Gb/s per channel. This includes specific baud rates used by various standards as listed in Table 1. The XC2VPX70 MGT operates at a fixed 4.25 Gb/s per channel.

The RocketIO X MGT consists of the *Physical Media Attachment* (PMA) and *Physical Coding Sublayer* (PCS). The PMA contains the 6.25 Gb/s serializer/deserializer (SERDES), TX/RX buffers, clock generator, and clock recovery circuitry. The RocketIO X PCS has been significantly updated relative to the RocketIO PCS. In addition to the existing RocketIO PCS features, the RocketIO X PCS features 64B/66B encoder/decoder/scrambler/descrambler and SONET compatibility.

See Table 7, page 17, for a summary of the differences between the RocketIO X PMA/PCS and the RocketIO PMA/PCS.

Figure 4, page 3 shows a high-level block diagram of the RocketIO X transceiver and its FPGA interface signals.

*Table 1:* **Communications Standards Supported by RocketIO X Transceiver**(2)

| Mode | Channels (Lanes)(1) | I/O Bit Rate (Gb/s) |
|---|---|---|
| SONET OC-48 | 1 | 2.488 |
| PCI Express | 1, 2, 4, 8, 16 | 2.5 |
| Infiniband | 1, 4, 12 | 2.5 |
| XAUI (10-Gb Ethernet) | 4 | 3.125 |
| XAUI (10-Gb Fibre Channel) | 4 | 3.1875 |
| Aurora (Xilinx protocol) | 1, 2, 3, 4,... | 2.488 to 6.25 |
| Custom Mode | 1, 2, 3, 4,... | 2.488 to 6.25 |

**Notes:**
1. One channel is considered to be one transceiver.
2. XC2VPX70 operates at a fixed 4.25 Gb/s baud rate.

## PMA

### *Transmitter Output*

The RocketIO X transceiver is implemented in *Current Mode Logic* (CML). A CML transmitter output consists of transistors configured as shown in Figure 2. CML uses a positive supply and offers easy interface requirements. In this configuration, both legs of the driver, VP and VN, sink current, with one leg always sinking more current than its complement. The CML output consists of a differential pair with 50Ω source resistors. The signal swing is created by switching the current in a common-source differential pair.

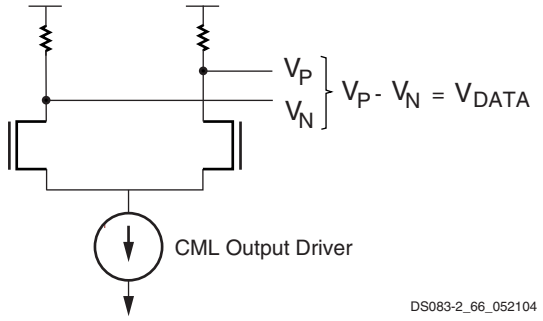


*Figure 2:* **CML Output Configuration**

### *Transmitter Termination*

On-chip termination is provided at the transmitter, eliminating the need for external termination. The output driver and termination are powered by $V_{TTX}$ at 1.5V. This configuration uses a CML approach with 50Ω termination to TXP and TXN as shown in Figure 3.

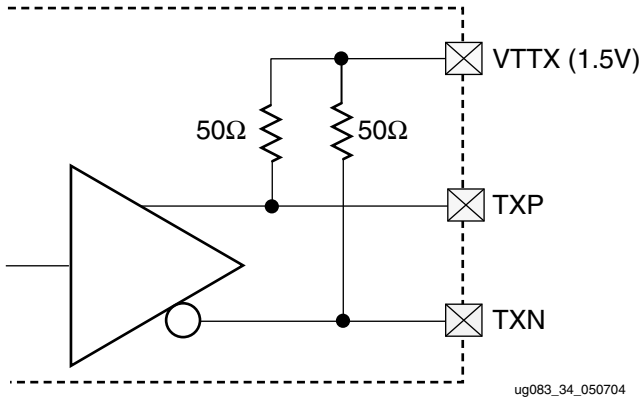


*Figure 3:* **RocketIO X Transmit Termination**

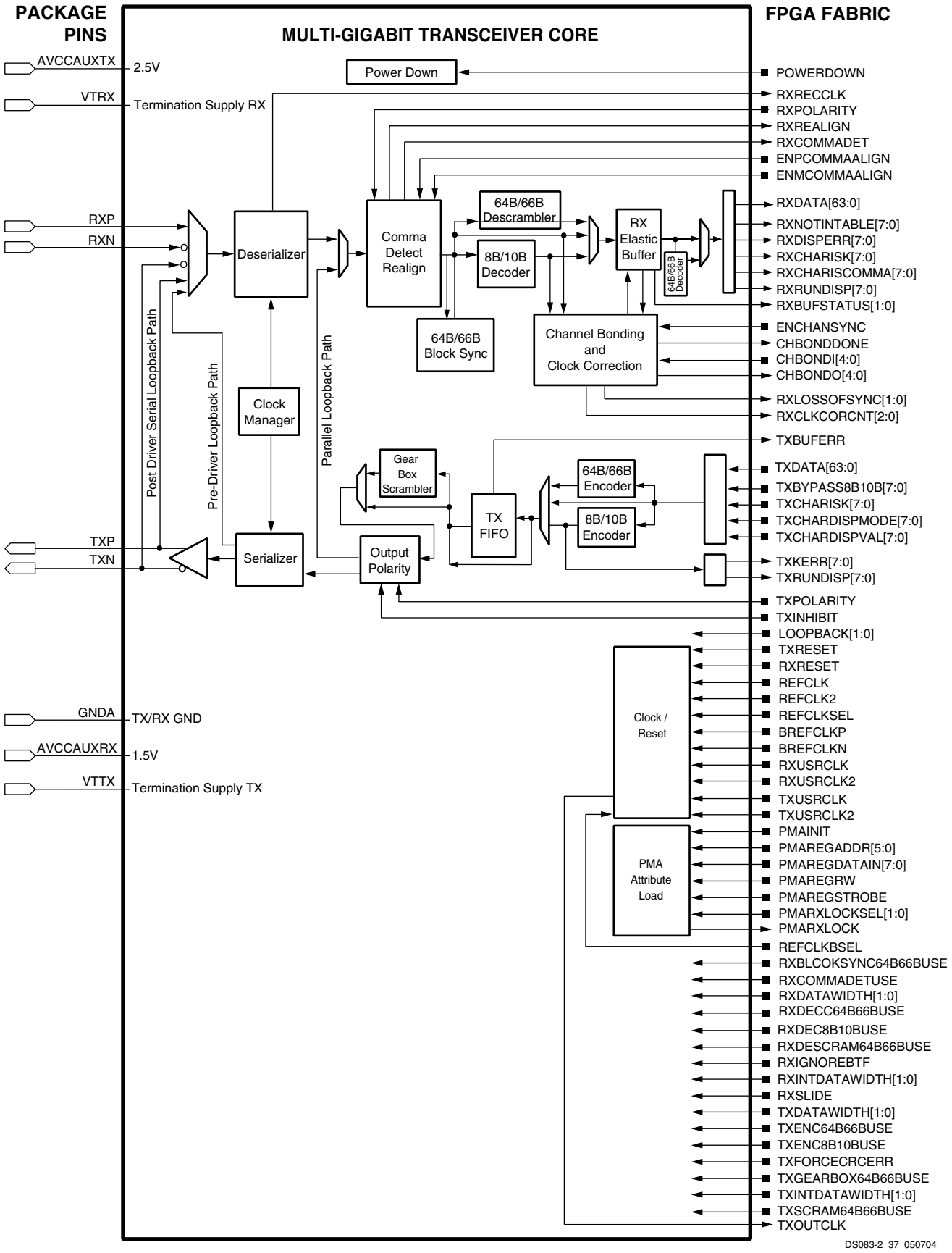


*Figure 4:* **RocketIO X Transceiver Block Diagram**

### Output Swing and Emphasis

The output swing and emphasis levels are fully programmable. Each is controlled via attributes at configuration, and can be modified via the PMA attribute programming bus.

The programmable output swing control can adjust the differential peak-to-peak output level between 200 mV and 1600 mV.

With emphasis, the differential voltage swing is boosted to create a stronger rising or falling waveform. This method compensates for high frequency loss in the transmission media that would otherwise limit the magnitude of this waveform. Lossy transmission lines cause the dissipation of electrical energy. This emphasis technique extends the distance that signals can be driven down lossy line media and increases the signal-to-noise ratio at the receiver.

Emphasis can be described from two perspectives, additive to the smaller voltage ($V_{SM}$) (pre-emphasis) or subtractive from the larger voltage ($V_{LG}$) (de-emphasis). The resulting benefits in compensating for channel loss are identical. It is simply a relative way of specifying the effect at the transmitter.

The equations for calculating pre-emphasis as a percentage and dB are as follows:

$$\text{Pre-Emphasis}_{\%} = ((V_{LG}-V_{SM}) / V_{SM}) \times 100$$
$$\text{Pre-Emphasis}_{dB} = 20 \log(V_{LG}/V_{SM})$$

The equations for calculating de-emphasis as a percentage and dB are as follows:

$$\text{De-Emphasis}_{\%} = (V_{LG} - V_{SM}) / V_{LG}) \times 100$$
$$\text{De-Emphasis}_{dB} = 20 \log(V_{SM}/V_{LG})$$

The pre-emphasis amount can be programmed in discrete steps between 0% and 500%. The de-emphasis amount can be programmed in discrete steps between 0% and 83%.

### Serializer

The serializer multiplies the reference frequency provided on REFCLK by 10, 16, 20, 32, or 40, depending on the operation mode. The multiplication of the clock is achieved by using an embedded PLL.

Data is converted from parallel to serial format and transmitted on the TXP and TXN differential outputs. The electrical connection of TXP and TXN can be interchanged through configuration. This option can be controlled by an input (TXPOLARITY) at the FPGA transmitter interface.

### Deserializer

Synchronous serial data reception is facilitated by a clock and data recovery (CDR) circuit. This circuit uses a fully monolithic Phase Lock Loop (PLL), which does not require any external components. The CDR circuit extracts both phase and frequency from the incoming data stream.

The derived clock, RXRECCLK, is generated and locked to as long as it remains within the specified component range. This clock is presented to the FPGA fabric at $^1/_{10}$, $^1/_{16}$, $^1/_{20}$, $^1/_{32}$, or $^1/_{40}$ the incoming data rate depending on the operating mode.

A sufficient number of transitions must be present in the data stream for CDR to work properly. The CDR circuit is guaranteed to work with 8B/10B and 64B/66B encoding. Further, CDR requires approximately 5,000 transitions upon power-up to guarantee locking to the incoming data rate. Once lock is achieved, up to 75 missing transitions can be tolerated before lock to the incoming data stream is lost.

Another feature of CDR is its ability to accept an external precision reference clock, REFCLK, which either acts to clock incoming data or to assist in synchronizing the derived RXRECCLK.

For further clarity, the TXUSRCLK is used to clock data from the FPGA fabric to the TX FIFO. The FIFO depth accounts for the slight phase difference between these two clocks. If the clocks are locked in frequency, then the FIFO acts much like a pass-through buffer.

The receiver can be configured to reverse the RXP and RXN inputs. This can be useful in the event that printed circuit board traces have been reversed.

### Receiver Lock Control

The CDR circuits will lock to the reference clock automatically if the data is not present. For proper operation, the frequency of the reference clock must be within ±100 ppm of the nominal frequency.

During normal operation, the receiver PLL automatically locks to incoming data (when present) or to the local reference clock (when data is not present). This is the default configuration for all primitives. This function can be overridden via the PMARXLOCKSEL port

When receive PLL lock is forced to the local reference, phase information from the incoming data stream is ignored. Data continues to be sampled, but synchronous to the local reference rather than relative to edges in the data stream.

### Receive Equalization

In addition to transmit emphasis, the RocketIO X MGT provides a programmable active receive equalization feature to further compensate the effects of channel attenuation at high frequencies.

By adjusting RXFER, the right amount of equalization can be added to reverse the signal degradation caused by a printed circuit board, a backplane, or a line/switch card. RXFER can be set through software configuration or the PMA Attribute Bus.

### Receiver Termination

On-chip termination is provided at the receiver, eliminating the need for external termination. The receiver termination supply ($V_{TRX}$) is the center tap of differential termination to

RXP and RXN as shown in Figure 5. This supports multiple termination styles, including high-side, low-side, and differential (floating or active). This configuration supports receiver termination compatible to Virtex-II Pro devices, using a CML (high-side) termination to an active supply of 1.8V – 2.5V. For DC coupling of two Virtex-II Pro X devices, a 1.5V CML termination for VTRX is recommended.

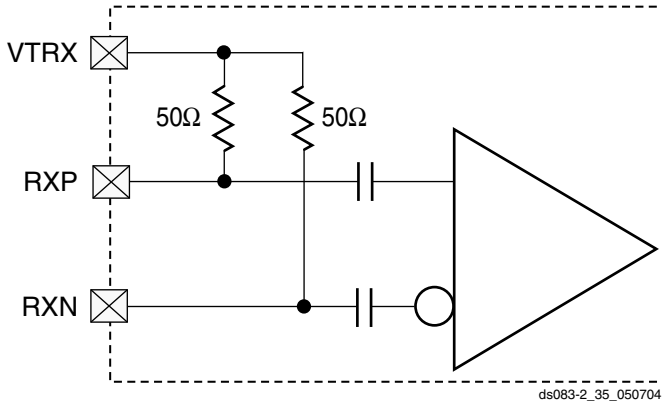


*Figure 5:* **RocketIO X Receive Termination**

## PCS

### *Fabric Data Interface*

Internally, the PCS operates in either 2-byte mode (16/20 bits) or 4-byte mode (32/40 bits). When in 2-byte mode, the FPGA fabric interface can either be 1, 2, or 4 bytes wide. When in 4-byte mode, the FPGA fabric interface can either be 4 or 8 bytes wide. When accompanied by the predefined modes of the PMA, the user thus has a large combination of protocols and data rates from which to choose.

USRCLK2 clocks data on the fabric side, while USRCLK clocks data on the PCS side. This creates distinct USRCLK/USRCLK2 frequency ratios for different combinations of fabric and internal data widths. Table 2 summarizes the USRCLK2-to-USRCLK ratios for the different possible combinations of data widths.

*Table 2:* **Clock Ratios for Various Data Widths**

| Fabric Data Width | Frequency Ratio of USRCLK:USRCLK2 | |
|---|---|---|
| | 2-Byte Internal Data Width | 4-Byte Internal Data Width |
| 1 byte | 1:2 (1) | N/A |
| 2 byte | 1:1 | N/A |
| 4 byte | 2:1 (1) | 1:1 |
| 8 byte | N/A | 2:1 (1) |

**Notes:**
1. Each edge of slower clock must align with falling edge of faster clock.

As a general guide, use 2-byte internal data width mode when the serial speed is below 5 Gb/s, and 4-byte internal data width mode when the serial speed is greater than 5 Gb/s. In 2-byte mode, the PCS processes 4-byte data every other byte.

No fixed phase relationship is assumed between REFCLK, RXRECCLK, and/or any other clock that is not tied to either of these clocks. When RXUSRCLK and RXUSRCLK2 have different frequencies, each edge of the slower clock is aligned to a falling edge of the faster clock. The same relationships apply to TXUSRCLK and TXUSRCLK2.

### *FPGA Transmit Interface*

The FPGA can send either one, two, or four characters of data to the transmitter. Each character can be either 8 bits or 10 bits wide. If 8-bit data is applied, the additional inputs become control signals for the 8B/10B encoder. When the 8B/10B encoder is bypassed, the 10-bit character order is generated as follows:

TXCHARDISPMODE[0] (first bit transmitted)
TXCHARDISPVAL[0]
TXDATA[7:0] (last bit transmitted is TXDATA[0])

### *64B/66B Encoder/Decoder*

The RocketIO X PCS features a 64B/66B encoder/decoder, scrambler/descrambler, and gearbox functions that can be bypassed as needed. The encoder is compliant with IEEE 802.3ae specifications.

### *Scrambler/Gearbox*

The bypassable scrambler operates on the read side of the transmit FIFO. The scrambler uses the following generator polynomial to scramble 64B/66B payload data:

$$G(x) = 1 + x^{39} + x^{58}$$

The scrambler works in conjunction with the gearbox, which frames 64B/66B data for the PMA. The gearbox should always be enabled when using the 64B/66B protocal.

### *Disparity Control*

The 8B/10B encoder is initialized with a negative running disparity. Unique control allows forcing the current running disparity state.

TXRUNDISP signals its current running disparity. This may be useful in those cases where there is a need to manipulate the initial running disparity value.

Bits TXCHARDISPMODE and TXCHARDISPVAL control the generation of running disparity before each byte.

For example, the transceiver can generate the sequence

```
K28.5+ K28.5+ K28.5- K28.5-
```

or

```
K28.5- K28.5- K28.5+ K28.5+
```

by specifying inverted running disparity for the second and fourth bytes.

### *Transmit FIFO*

Proper operation of the circuit is only possible if the FPGA clock (TXUSRCLK) is frequency-locked to the reference clock (REFCLK). Phase variations up to one clock cycle are allowable. The FIFO has a depth of four. Overflow or underflow conditions are detected and signaled at the interface. Bypassing of this FIFO is programmable.

### *8B/10B Encoder*

Note: In the RocketIO transceiver, the most-significant byte is sent first; in the RocketIO X transceiver, the least-significant byte is sent first.

A bypassable 8B/10B encoder is included. The encoder uses the same 256 data characters and 12 control characters used by Gigabit Ethernet, Fibre Channel, and InfiniBand.

The encoder accepts 8 bits of data along with a K-character signal for a total of 9 bits per character applied, and generates a 10 bit character for transmission. If the K-character signal is High, the data is encoded into one of the twelve possible K-characters available in the 8B/10B code. If the K-character input is Low, the 8 bits are encoded as standard data. If the K-character input is High, and a user applies other than one of the twelve possible combinations, TXKERR indicates the error.

### *8B/10B Decoder*

Note: In the RocketIO transceiver, the most-significant byte is sent first; in the RocketIO X transceiver, the least-significant byte is sent first.

An optional 8B/10B decoder is included. A programmable option allows the decoder to be bypassed. When the 8B/10B decoder is bypassed, the 10-bit character order is, for example,

RXCHARISK[0] (first bit received)
RXRUNDISP[0]
RXDATA[7:0] (last bit received is RXDATA[0])

The decoder uses the same table that is used for Gigabit Ethernet, Fibre Channel, and InfiniBand. In addition to decoding all data and K-characters, the decoder has several extra features. The decoder separately detects both “disparity errors” and “out-of-band” errors. A disparity error is the reception of 10-bit character that exists within the 8B/10B table but has an incorrect disparity. An out-of-band error is the reception of a 10-bit character that does not exist within the 8B/10B table. It is possible to obtain an out-of-band error without having a disparity error. The proper disparity is always computed for both legal and illegal characters. The current running disparity is available at the RXRUNDISP signal.

The 8B/10B decoder performs a unique operation if out-of-band data is detected. If out-of-band data is detected, the decoder signals the error and passes the illegal 10-bits through and places them on the outputs. This can be used for debugging purposes if desired.

The decoder also signals the reception of one of the 12 valid K-characters. In addition, a programmable comma detect is included. The comma detect signal registers a comma on the receipt of any comma+, comma–, or both. Since the comma is defined as a 7-bit character, this includes several out-of-band characters. Another option allows the decoder to detect only the three defined commas (K28.1, K28.5, and K28.7) as comma+, comma–, or both. In total, there are six possible options, three for valid commas and three for "any comma."

Note that all bytes (1, 2, 4, or 8) at the RX FPGA interface each have their own individual 8B/10B indicators (K-character, disparity error, out-of-band error, current running disparity, and comma detect).

### *Receiver Buffer*

The receiver includes buffers (FIFOs) in the datapath. This section gives the reasons for including the buffers and outlines their operation.

The receiver buffer is required for two reasons:

- *Clock correction* to accommodate the slight difference in frequency between the recovered clock RXRECCLK and the internal FPGA user clock RXUSRCLK
- *Channel bonding* to allow realignment of the input stream to ensure proper alignment of data being read through multiple transceivers

The receiver uses an *elastic buffer*, where "elastic" refers to the ability to modify the read pointer for clock correction and channel bonding.

#### Comma Detection

Word alignment is dependent on the state of comma detect bits. If comma detect is enabled, the transceiver recognizes up to two 10-bit preprogrammed characters. Upon detection of the character or characters, the comma detect output is driven high and the data is synchronously aligned. If a comma is detected and the data is aligned, no further alignment alteration takes place. If a comma is received and realignment is necessary, the data is realigned and an indi-

cation is given at the receiver interface. The realignment indicator is a distinct output.

The transceiver continuously monitors the data for the presence of the 10-bit character(s). Upon each occurrence of a 10-bit character, the data is checked for word alignment. If comma detect is disabled, the data is not aligned to any particular pattern. The programmable option allows a user to align data on comma+, comma–, both, or a unique user-defined and programmed sequence.

Comma detection has been expanded beyond 10-bit symbol detection and alignment to include 8-bit symbol detection and alignment for 16-, 20-, 32-, and 40-bit paths. The ability to detect symbols, and then either align to 1-word, 2-word, or 4-word boundaries is included. The RXSLIDE input allows the user to “slide” or “slip” the alignment by one bit in each 16-, 20-, 32- and 40-bit mode at any time for SONET applications. Comma detection can be bypassed when needed.

### Clock Correction

RXRECCLK (the recovered clock) reflects the data rate of the incoming data. RXUSRCLK defines the rate at which the FPGA fabric consumes the data. Ideally, these rates are identical. However, since the clocks typically have different sources, one of the clocks will be faster than the other. The receiver buffer accommodates this difference between the clock rates. See Figure 6.

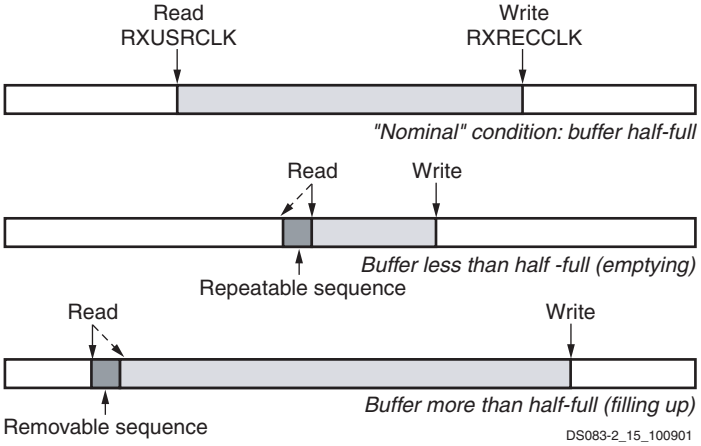


*Figure 6:* **Clock Correction in Receiver**

Nominally, the buffer is always half full. This is shown in the top buffer, Figure 6, where the shaded area represents buffered data not yet read. Received data is inserted via the write pointer under control of RXRECCLK. The FPGA fabric reads data via the read pointer under control of RXUSRCLK. The half full/half empty condition of the buffer gives a cushion for the differing clock rates. This operation continues indefinitely, regardless of whether or not "meaningful" data is being received. When there is no meaningful data to be received, the incoming data will consist of IDLE characters or other padding.

If RXUSRCLK is faster than RXRECCLK, the buffer becomes more empty over time. The clock correction logic corrects for this by decrementing the read pointer to reread a repeatable byte sequence. This is shown in the middle buffer, Figure 6, where the solid read pointer decrements to the value represented by the dashed pointer. By decrementing the read pointer instead of incrementing it in the usual fashion, the buffer is partially refilled. The transceiver design will repeat a single repeatable byte sequence when necessary to refill a buffer. If the byte sequence length is greater than one, and if attribute CLK_COR_REPEAT_WAIT is 0, then the transceiver may repeat the same sequence multiple times until the buffer is refilled to the desired extent.

Similarly, if RXUSRCLK is slower than RXRECCLK, the buffer will fill up over time. The clock correction logic corrects for this by incrementing the read pointer to skip over a removable byte sequence that need not appear in the final FPGA fabric byte stream. This is shown in the bottom buffer, Figure 6, where the solid read pointer increments to the value represented by the dashed pointer. This accelerates the emptying of the buffer, preventing its overflow. The transceiver design will skip a single byte sequence when necessary to partially empty a buffer. If attribute CLK_COR_REPEAT_WAIT is 0, the transceiver may also skip two consecutive removable byte sequences in one step to further empty the buffer when necessary.

These operations require the clock correction logic to recognize a byte sequence that can be freely repeated or omitted in the incoming data stream. This sequence is generally an IDLE sequence, or other sequence comprised of special values that occur in the gaps separating packets of meaningful data. These gaps are required to occur sufficiently often to facilitate the timely execution of clock correction.

### Channel Bonding

Some gigabit I/O standards such as Infiniband specify the use of multiple transceivers in parallel for even higher data rates. Words of data are split into bytes, with each byte sent over a separate channel (transceiver). See Figure 7.

The top half of the figure shows the transmission of words split across four transceivers (channels or lanes). PPPP, QQQQ, RRRR, SSSS, and TTTT represent words sent over the four channels.

The bottom-left portion of Figure 7 shows the initial situation in the FPGA’s receivers at the other end of the four channels. Due to variations in transmission delay—especially if the channels are routed through repeaters—the FPGA fabric might not correctly assemble the bytes into complete words. The bottom-left illustration shows the incorrect assembly of data words PQPP, QRQQ, RSRR, and so forth.

To support correction of this misalignment, the data stream includes special byte sequences that define corresponding points in the several channels. In the bottom half of Figure 7, the shaded "P" bytes represent these special characters. Each receiver recognizes the "P" channel bond-

ing character, and remembers its location in the buffer. At some point, one transceiver designated as the master instructs all the transceivers to align to the channel bonding character "P" (or to some location relative to the channel bonding character).

After this operation, words transmitted to the FPGA fabric are properly aligned: RRRR, SSSS, TTTT, and so forth, as shown in the bottom-right portion of Figure 7. To ensure that the channels remain properly aligned following the channel bonding operation, the master transceiver must also control the clock correction operations described in the previous section for all channel-bonded transceivers.

### *Transmitter Buffer*

The transmitter's buffer write pointer (TXUSRCLK) is frequency-locked to its read pointer (REFCLK). Therefore, clock correction and channel bonding are not required. The purpose of the transmitter's buffer is to accommodate a phase difference between TXUSRCLK and REFCLK. A simple FIFO suffices for this purpose. A FIFO depth of four will permit reliable operation with simple detection of overflow or underflow, which could occur if the clocks are not frequency-locked.

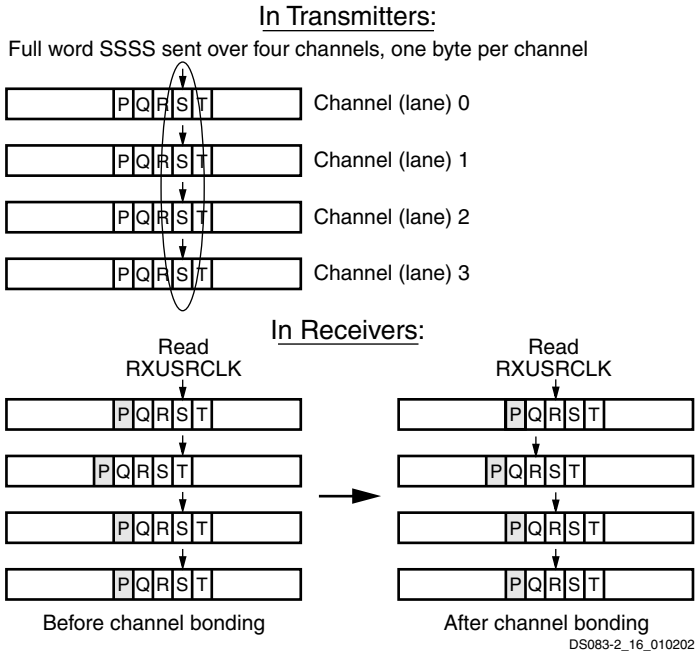


*Figure 7:* **Channel Bonding (Alignment)**

## RocketIO X Configuration

This section outlines functions that can be selected or controlled by configuration. Xilinx implementation software supports the transceiver primitives shown in Table 3.

*Table 3:* **Supported RocketIO X Transceiver Primitives**

| Primitive | Description |
|---|---|
| GT10_CUSTOM | Fully customizable by user |
| GT10_OC48_1 | SONET OC-48, 1-byte data path |
| GT10_OC48_2 | SONET OC-48, 2-byte data path |
| GT10_OC48_4 | SONET OC-48, 4-byte data path |
| GT10_PCI_EXPRESS_1 | PCI Express, 1-byte data path |
| GT10_PCI_EXPRESS_2 | PCI Express, 2-byte data path |
| GT10_PCI_EXPRESS_4 | PCI Express, 4-byte data path |
| GT10_INFINIBAND_1 | Infiniband, 1-byte data path |
| GT10_INFINIBAND_2 | Infiniband, 2-byte data path |
| GT10_INFINIBAND_4 | Infiniband, 4-byte data path |

## Other RocketIO X Features and Notes

### *Loopback*

In order to facilitate testing without having the need to either apply patterns or measure data at GHz rates, four programmable loop-back features are available.

The first option, serial loopback, is available in two modes: *pre-driver* and *post-driver*.

- The pre-driver mode loops back to the receiver without going through the output driver. In this mode, TXP and TXN are not driven and therefore need not be terminated.
- The post-driver mode is the same as the RocketIO loopback. In this mode, TXP and TXN are driven and must be properly terminated.

The third option, parallel loopback, checks the digital circuitry. When parallel loopback is enabled, the serial loopback path is disabled. However, the transmitter outputs remain active, and data can be transmitted. If TXINHIBIT is asserted, TXP is forced to 0 until TXINHIBIT is de-asserted.

The fourth option, repeater loopback, allows received data to be transmitted without going through the FPGA fabric.

### *Reset*

The receiver and transmitter have their own synchronous reset inputs. The transmitter reset, TXRESET, recenters the transmission FIFO and resets all transmitter registers and the encoder. The receiver reset, RXRESET, recenters the receiver elastic buffer and resets all receiver registers and the decoder. When the signals TXRESET or RXRESET are asserted High, the PCS is in reset. After TXRESET or RXRESET are deasserted, the PCS takes five clocks to come out of reset for each clock domain.

The PMA configuration vector is not affected during this reset, so the PMA speed, filter settings, and so on, all remain the same. Also, the PMA internal pipeline is not affected and continues to operate in normal fashion.

### *Power*

The transceiver voltage regulator circuits must not be shared with any other supplies (including FPGA supplies $V_{CCINT}$, $V_{CCO}$, $V_{CCAUX}$, and $V_{REF}$). Voltage regulators can be shared among transceiver power supplies of the same voltage, but each supply pin must still have its own separate passive filtering network.

All RocketIO transceivers in the FPGA, whether instantiated in the design or not, must be connected to power and ground. Unused transceivers can be powered by any 1.5V or 2.5V source, and passive filtering is not required.

The Power Down feature is controlled by the transceiver's POWERDOWN input pin. Any given transceiver that is not instantiated in the design is automatically set to the POWERDOWN state by the Xilinx ISE development software. The Power Down pin on the FPGA package has no effect on the MGT.

# Functional Description: RocketIO Multi-Gigabit Transceiver (MGT)

This section summarizes the features of the RocketIO multi-gigabit transceiver. For an in-depth discussion of the RocketIO MGT, including digital and analog design considerations, refer to the ***RocketIO Transceiver User Guide***.

## RocketIO Overview

Up to twenty RocketIO MGTs are available. The MGT is designed to operate at any baud rate in the range of 622 Mb/s to 3.125 Gb/s per channel. This includes specific baud rates used by various standards as listed in Table 4.

The RocketIO MGT consists of the *Physical Media Attachment* (PMA) and *Physical Coding Sublayer* (PCS). The PMA contains the 3.125 Gb/s serializer/deserializer (SERDES), TX/RX buffers, clock generator, and clock recovery circuitry. The PCS contains the bypassable 8B/10B encoder/ decoder, elastic buffers, and Cyclic Redundancy Check (CRC) units. The encoder and decoder handle the 8B/10B coding scheme. The elastic buffers support the clock correction (rate matching) and channel bonding features. The CRC units perform CRC generation and checking.

See Table 7, page 17, for a summary of the differences between the RocketIO X PMA/PCS and the RocketIO PMA/PCS.

Figure 10, page 11 shows a high-level block diagram of the RocketIO transceiver and its FPGA interface signals.

*Table 4:* **Protocols Supported by RocketIO Transceiver**

| Mode | Channels (Lanes)(1) | I/O Bit Rate (Gb/s) |
|---|---|---|
| Fibre Channel | 1 | 1.06 |
| | | 2.12 |
| | | 3.1875 (2) |
| Gigabit Ethernet | 1 | 1.25 |
| 10Gbit Ethernet | 4 | 3.125 |
| Infiniband | 1, 4, 12 | 2.5 |
| Aurora | 1, 2, 3, 4, ... | 0.622 – 3.125 |
| Custom Protocol | 1, 2, 3, 4, ... | up to 3.125 |

**Notes:**
1. One channel is considered to be one transceiver.
2. Virtex-II Pro MGT can support the 10G Fibre Channel data rates of 3.1875 Gb/s across 6" of standard FR-4 PCB and one connector (Molex 74441 or equivalent) with a bit error rate of $10^{-12}$ or better.

## PMA

### *Transmitter Output*

The RocketIO transceiver is implemented in *Current Mode Logic* (CML). A CML transmitter output consists of transistors configured as shown in Figure 8. CML uses a positive supply and offers easy interface requirements. In this configuration, both legs of the driver, VP and VN, sink current, with one leg always sinking more current than its complement. The CML output consists of a differential pair with 50Ω (or, optionally, 75Ω) source resistors. The signal swing is created by switching the current in a common-source differential pair.

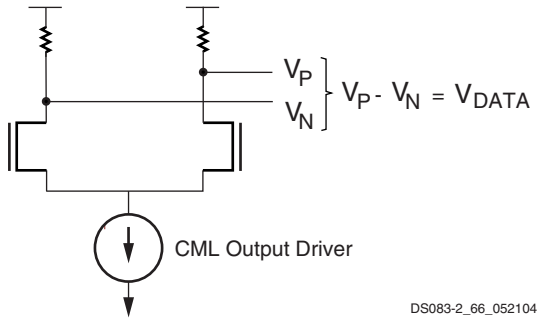


*Figure 8:* **CML Output Configuration**

### *Transmitter Termination*

On-chip termination is provided at the transmitter, eliminating the need for external termination. The output driver and termination are powered by $V_{TTX}$. This configuration uses a CML approach with selectable 50Ω or 75Ω termination to TXP and TXN as shown in Figure 9.

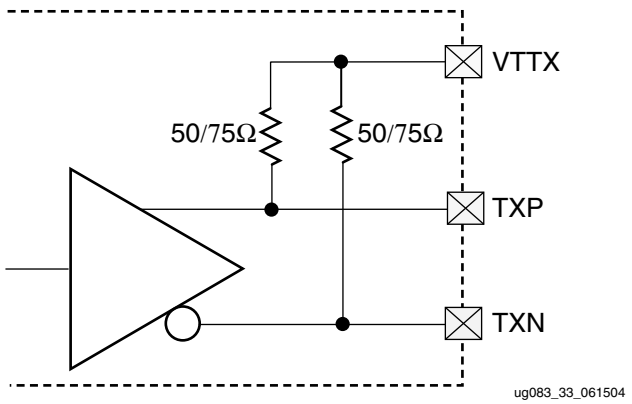


*Figure 9:* **RocketIO Transmit Termination**

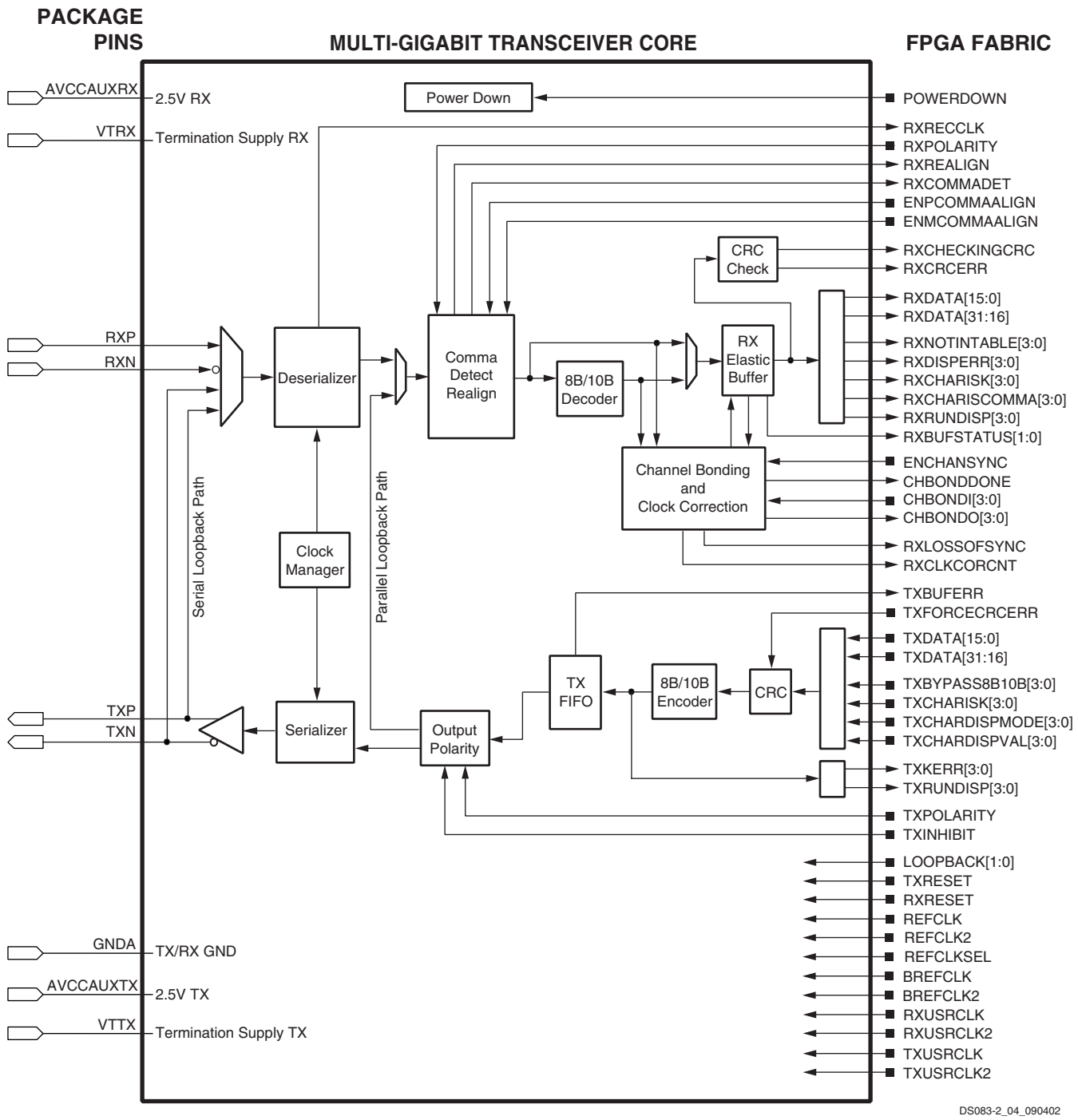


*Figure 10:* **RocketIO Transceiver Block Diagram**

### *Output Swing and Pre-emphasis*

The output swing and pre-emphasis levels of the RocketIO MGTs are fully programmable. Each is controlled via attributes at configuration, but can be modified via partial reconfiguration.

The programmable output swing control can adjust the differential output level between 400 mV and 800 mV in four increments of 100 mV.

With pre-emphasis, the differential voltage swing is boosted to create a stronger rising waveform. This method compensates for high-frequency loss in the transmission media that would otherwise limit the magnitude of this waveform. Lossy transmission lines cause the dissipation of electrical energy. This pre-emphasis technique extends the distance that signals can be driven down lossy line media and increases the signal-to-noise ratio at the receiver.

### Serializer

The serializer multiplies the reference frequency provided on REFCLK by 20. The multiplication of the clock is achieved by using an embedded PLL.

Data is converted from parallel to serial format and transmitted on the TXP and TXN differential outputs. The electrical connection of TXP and TXN can be interchanged through configuration. This option can be controlled by an input (TXPOLARITY) at the FPGA transmitter interface.

### Deserializer

The serial transceiver input is locked to the input data stream through Clock and Data Recovery (CDR), a built-in feature of the RocketIO transceiver. CDR keys off the rising and falling edges of incoming data and derives a clock that is representative of the incoming data rate.

The derived clock, RXRECCLK, is generated and locked to as long as it remains within the specified component range. This clock is presented to the FPGA fabric at $^{1}/_{20}$ the incoming data rate.

A sufficient number of transitions must be present in the data stream for CDR to work properly. CDR requires approximately 5,000 transitions upon power-up to guarantee locking to the incoming data rate. Once lock is achieved, up to 75 missing transitions can be tolerated before lock to the incoming data stream is lost. The CDR circuit is guaranteed to work with 8B/10B encoding.

Another feature of CDR is its ability to accept an external precision reference clock, REFCLK, which either acts to clock incoming data or to assist in synchronizing the derived RXRECCLK.

For further clarity, the TXUSRCLK is used to clock data from the FPGA fabric to the TX FIFO. The FIFO depth accounts for the slight phase difference between these two clocks. If the clocks are locked in frequency, then the FIFO acts much like a pass-through buffer.

The receiver can be configured to reverse the RXP and RXN inputs. This can be useful in the event that printed circuit board traces have been reversed.

### Receiver Termination

On-chip termination is provided at the receiver, eliminating the need for external termination. The receiver includes programmable on-chip termination circuitry for 50Ω (default) or 75Ω impedance, as shown in Figure 11.

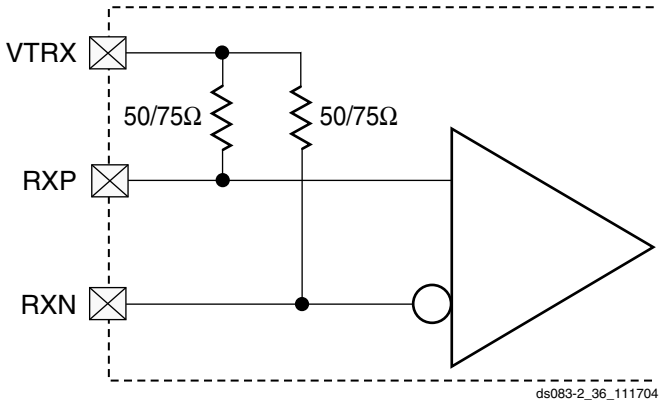


*Figure 11:* **RocketIO Receive Termination**

## PCS

### Fabric Data Interface

Internally, the PCS operates in 2-byte mode (16/20 bits). The FPGA fabric interface can either be 1, 2, or 4 bytes wide. When accompanied by the predefined modes of the PMA, the user thus has a large combination of protocols and data rates from which to choose.

USRCLK2 clocks data on the fabric side, while USRCLK clocks data on the PCS side. This creates distinct USRCLK/USRCLK2 frequency ratios for different combinations of fabric and internal data widths. Table 5 summarizes the USRCLK2 to USRCLK ratios for the three fabric data widths.

No fixed phase relationship is assumed between REFCLK, RXRECCLK, and/or any other clock that is not tied to either of these clocks. When RXUSRCLK and RXUSRCLK2 have different frequencies, each edge of the slower clock is aligned to a falling edge of the faster clock. The same relationships apply to TXUSRCLK and TXUSRCLK2.

*Table 5:* **Clock Ratios for Various Data Widths**

| Fabric Data Width | Frequency Ratio of USRCLK:USRCLK2 |
|---|---|
| 1-byte | 1:2 (1) |
| 2-byte | 1:1 |
| 4-byte | 2:1 (1) |

**Notes:**
1. Each edge of slower clock must align with falling edge of faster clock.

### FPGA Transmit Interface

The FPGA can send either one, two, or four characters of data to the transmitter. Each character can be either 8 bits or 10 bits wide. If 8-bit data is applied, the additional inputs become control signals for the 8B/10B encoder. When the 8B/10B encoder is bypassed, the 10-bit character order is generated as follows:

TXCHARDISPMODE[0] (first bit transmitted)
TXCHARDISPVAL[0]
TXDATA[7:0] (last bit transmitted is TXDATA[0])

### Disparity Control

The 8B/10B encoder is initialized with a negative running disparity. Unique control allows forcing the current running disparity state.

TXRUNDISP signals its current running disparity. This may be useful in those cases where there is a need to manipulate the initial running disparity value.

Bits TXCHARDISPMODE and TXCHARDISPVAL control the generation of running disparity before each byte.

For example, the transceiver can generate the sequence

```
K28.5+ K28.5+ K28.5- K28.5-
```

or

```
K28.5- K28.5- K28.5+ K28.5+
```

by specifying inverted running disparity for the second and fourth bytes.

### Transmit FIFO

Proper operation of the circuit is only possible if the FPGA clock (TXUSRCLK) is frequency-locked to the reference clock (REFCLK). Phase variations up to one clock cycle are allowable. The FIFO has a depth of four. Overflow or underflow conditions are detected and signaled at the interface. Bypassing of this FIFO is programmable.

### 8B/10B Encoder

Note: In the RocketIO transceiver, the most-significant byte is sent first; in the RocketIO X transceiver, the least-significant byte is sent first.

A bypassable 8B/10B encoder is included. The encoder uses the same 256 data characters and 12 control characters used by Gigabit Ethernet, Fibre Channel, and InfiniBand.

The encoder accepts 8 bits of data along with a K-character signal for a total of 9 bits per character applied, and generates a 10 bit character for transmission. If the K-character signal is High, the data is encoded into one of the twelve possible K-characters available in the 8B/10B code. If the K-character input is Low, the 8 bits are encoded as standard data. If the K-character input is High, and a user applies other than one of the twelve possible combinations, TXKERR indicates the error.

### 8B/10B Decoder

Note: In the RocketIO transceiver, the most-significant byte is sent first; in the RocketIO X transceiver, the least-significant byte is sent first.

An optional 8B/10B decoder is included. A programmable option allows the decoder to be bypassed. When the 8B/10B decoder is bypassed, the 10-bit character order is, for example,

RXCHARISK[0] (first bit received)
RXRUNDISP[0]
RXDATA[7:0] (last bit received is RXDATA[0])

The decoder uses the same table that is used for Gigabit Ethernet, Fibre Channel, and InfiniBand. In addition to decoding all data and K-characters, the decoder has several extra features. The decoder separately detects both “disparity errors” and “out-of-band” errors. A disparity error is the reception of 10-bit character that exists within the 8B/10B table but has an incorrect disparity. An out-of-band error is the reception of a 10-bit character that does not exist within the 8B/10B table. It is possible to obtain an out-of-band error without having a disparity error. The proper disparity is always computed for both legal and illegal characters. The current running disparity is available at the RXRUNDISP signal.

The 8B/10B decoder performs a unique operation if out-of-band data is detected. If out-of-band data is detected, the decoder signals the error and passes the illegal 10-bits through and places them on the outputs. This can be used for debugging purposes if desired.

The decoder also signals the reception of one of the 12 valid K-characters. In addition, a programmable comma detect is included. The comma detect signal registers a comma on the receipt of any comma+, comma–, or both. Since the comma is defined as a 7-bit character, this includes several out-of-band characters. Another option allows the decoder to detect only the three defined commas (K28.1, K28.5, and K28.7) as comma+, comma–, or both. In total, there are six possible options, three for valid commas and three for "any comma."

Note that all bytes (1, 2, or 4) at the RX FPGA interface each have their own individual 8B/10B indicators (K-character, disparity error, out-of-band error, current running disparity, and comma detect).

### *Receiver Buffer*

The receiver includes buffers (FIFOs) in the datapath. This section gives the reasons for including the buffers and outlines their operation.

The receiver buffer is required for two reasons:

- *Clock correction* to accommodate the slight difference in frequency between the recovered clock RXRECCLK and the internal FPGA user clock RXUSRCLK
- *Channel bonding* to allow realignment of the input stream to ensure proper alignment of data being read through multiple transceivers

The receiver uses an *elastic buffer,* where "elastic" refers to the ability to modify the read pointer for clock correction and channel bonding.

#### Comma Detection

Word alignment is dependent on the state of comma detect bits. If comma detect is enabled, the transceiver recognizes up to two 10-bit preprogrammed characters. Upon detection of the character or characters, the comma detect output is driven high and the data is synchronously aligned. If a comma is detected and the data is aligned, no further alignment alteration takes place. If a comma is received and realignment is necessary, the data is realigned and an indication is given at the receiver interface. The realignment indicator is a distinct output.

The transceiver continuously monitors the data for the presence of the 10-bit character(s). Upon each occurrence of a 10-bit character, the data is checked for word alignment. If comma detect is disabled, the data is not aligned to any particular pattern. The programmable option allows a user to align data on comma+, comma–, both, or a unique user-defined and programmed sequence.

#### Clock Correction

RXRECCLK (the recovered clock) reflects the data rate of the incoming data. RXUSRCLK defines the rate at which the FPGA fabric consumes the data. Ideally, these rates are identical. However, since the clocks typically have different sources, one of the clocks will be faster than the other. The receiver buffer accommodates this difference between the clock rates. See Figure 12.

Nominally, the buffer is always half full. This is shown in the top buffer, Figure 12, where the shaded area represents buffered data not yet read. Received data is inserted via the write pointer under control of RXRECCLK. The FPGA fabric reads data via the read pointer under control of RXUSRCLK. The half full/half empty condition of the buffer gives a cushion for the differing clock rates. This operation continues indefinitely, regardless of whether or not "meaningful" data is being received. When there is no meaningful data to be received, the incoming data will consist of IDLE characters or other padding.

If RXUSRCLK is faster than RXRECCLK, the buffer becomes more empty over time. The clock correction logic corrects for this by decrementing the read pointer to reread a repeatable byte sequence. This is shown in the middle buffer, Figure 12, where the solid read pointer decrements to the value represented by the dashed pointer.

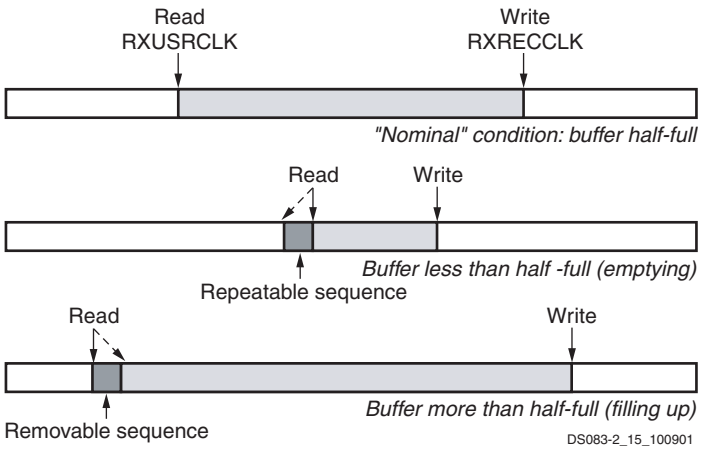


*Figure 12:* **Clock Correction in Receiver**

By decrementing the read pointer instead of incrementing it in the usual fashion, the buffer is partially refilled. The transceiver design will repeat a single repeatable byte sequence when necessary to refill a buffer. If the byte sequence length is greater than one, and if attribute CLK_COR_REPEAT_WAIT is 0, then the transceiver may repeat the same sequence multiple times until the buffer is refilled to the desired extent.

Similarly, if RXUSRCLK is slower than RXRECCLK, the buffer will fill up over time. The clock correction logic corrects for this by incrementing the read pointer to skip over a removable byte sequence that need not appear in the final FPGA fabric byte stream. This is shown in the bottom buffer, Figure 12, where the solid read pointer increments to the value represented by the dashed pointer. This accelerates the emptying of the buffer, preventing its overflow. The transceiver design will skip a single byte sequence when necessary to partially empty a buffer. If attribute CLK_COR_REPEAT_WAIT is 0, the transceiver may also skip two consecutive removable byte sequences in one step to further empty the buffer when necessary.

These operations require the clock correction logic to recognize a byte sequence that can be freely repeated or omitted in the incoming data stream. This sequence is generally an IDLE sequence, or other sequence comprised of special values that occur in the gaps separating packets of meaningful data. These gaps are required to occur sufficiently often to facilitate the timely execution of clock correction.

#### Channel Bonding

Some gigabit I/O standards such as Infiniband specify the use of multiple transceivers in parallel for even higher data rates. Words of data are split into bytes, with each byte sent over a separate channel (transceiver). See Figure 13.

The top half of the figure shows the transmission of words split across four transceivers (channels or lanes). PPPP, QQQQ, RRRR, SSSS, and TTTT represent words sent over the four channels.

The bottom-left portion of Figure 13 shows the initial situation in the FPGA's receivers at the other end of the four channels. Due to variations in transmission delay—especially if the channels are routed through repeaters—the FPGA fabric might not correctly assemble the bytes into complete words. The bottom-left illustration shows the incorrect assembly of data words PQPP, QRQQ, RSRR, and so forth.

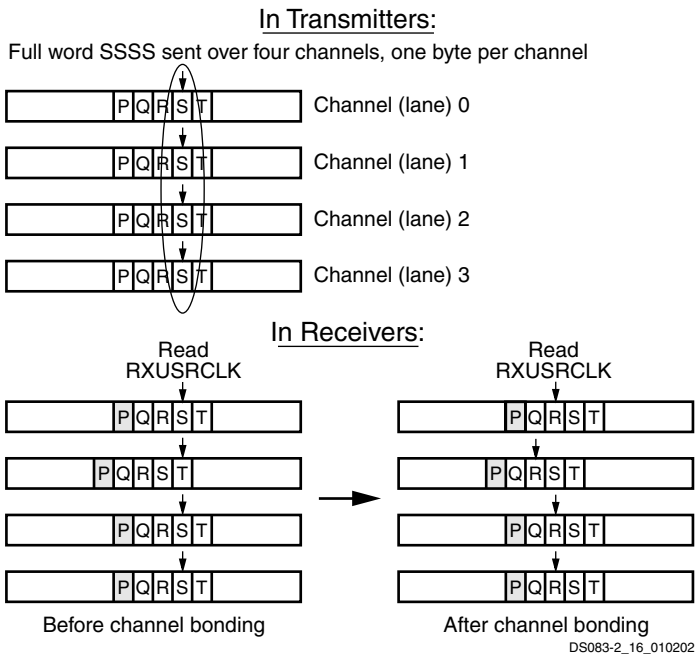


*Figure 13:* **Channel Bonding (Alignment)**

To support correction of this misalignment, the data stream includes special byte sequences that define corresponding points in the several channels. In the bottom half of Figure 13, the shaded "P" bytes represent these special characters. Each receiver recognizes the "P" channel bonding character, and remembers its location in the buffer. At some point, one transceiver designated as the master instructs all the transceivers to align to the channel bonding character "P" (or to some location relative to the channel bonding character).

After this operation, words transmitted to the FPGA fabric are properly aligned: RRRR, SSSS, TTTT, and so forth, as shown in the bottom-right portion of Figure 13. To ensure that the channels remain properly aligned following the channel bonding operation, the master transceiver must also control the clock correction operations described in the previous section for all channel-bonded transceivers.

### *Transmitter Buffer*

The transmitter's buffer write pointer (TXUSRCLK) is frequency-locked to its read pointer (REFCLK). Therefore, clock correction and channel bonding are not required. The purpose of the transmitter's buffer is to accommodate a phase difference between TXUSRCLK and REFCLK. A simple FIFO suffices for this purpose. A FIFO depth of four will permit reliable operation with simple detection of overflow or underflow, which could occur if the clocks are not frequency-locked.

## RocketIO Configuration

This section outlines functions that can be selected or controlled by configuration. Xilinx implementation software supports 16 transceiver primitives, as shown in Table 6.

Each of the primitives in Table 6 defines default values for the configuration attributes, allowing some number of them to be modified by the user. Refer to the ***RocketIO Transceiver User Guide*** for more details.

*Table 6:* **Supported RocketIO MGT Protocol Primitives**

| | |
|---|---|
| GT_CUSTOM | Fully customizable by user |
| GT_FIBRE_CHAN_1 | Fibre Channel, 1-byte data path |
| GT_FIBRE_CHAN_2 | Fibre Channel, 2-byte data path |
| GT_FIBRE_CHAN_4 | Fibre Channel, 4-byte data path |
| GT_ETHERNET_1 | Gigabit Ethernet, 1-byte data path |
| GT_ETHERNET_2 | Gigabit Ethernet, 2-byte data path |
| GT_ETHERNET_4 | Gigabit Ethernet, 4-byte data path |
| GT_XAUI_1 | 10-gigabit Ethernet, 1-byte data path |
| GT_XAUI_2 | 10-gigabit Ethernet, 2-byte data path |
| GT_XAUI_4 | 10-gigabit Ethernet, 4-byte data path |
| GT_INFINIBAND_1 | Infiniband, 1-byte data path |
| GT_INFINIBAND_2 | Infiniband, 2-byte data path |
| GT_INFINIBAND_4 | Infiniband, 4-byte data path |
| GT_AURORA_1 (1) | 1-byte data path |
| GT_AURORA_2 (1) | 2-byte data path |
| GT_AURORA_4 (1) | 4-byte data path |

**Notes:**
1. For more information on the Aurora protocol, visit **http://www.xilinx.com**.

## Other RocketIO Features and Notes

### *CRC*

The RocketIO transceiver CRC logic supports the 32-bit invariant CRC calculation used by Infiniband, FibreChannel, and Gigabit Ethernet.

On the transmitter side, the CRC logic recognizes where the CRC bytes should be inserted and replaces four placeholder bytes at the tail of a data packet with the computed CRC. For Gigabit Ethernet and FibreChannel, transmitter

CRC may adjust certain trailing bytes to generate the required running disparity at the end of the packet.

On the receiver side, the CRC logic verifies the received CRC value, supporting the same standards as above.

The CRC logic also supports a user mode, with a simple data packet stucture beginning and ending with user-defined SOP and EOP characters.

### Loopback

In order to facilitate testing without having the need to either apply patterns or measure data at GHz rates, two programmable loop-back features are available.

One option, serial loopback, places the gigabit transceiver into a state where transmit data is directly fed back to the receiver. An important point to note is that the feedback path is at the output pads of the transmitter. This tests the entirety of the transmitter and receiver.

The second option, parallel loopback, checks the digital circuitry. When parallel loopback is enabled, the serial loopback path is disabled. However, the transmitter outputs remain active, and data can be transmitted. If TXINHIBIT is asserted, TXP is forced to 0 until TXINHIBIT is de-asserted.

### Reset

The receiver and transmitter have their own synchronous reset inputs. The transmitter reset recenters the transmission FIFO, and resets all transmitter registers and the 8B/10B decoder. The receiver reset recenters the receiver elastic buffer, and resets all receiver registers and the 8B/10B encoder. Neither reset has any effect on the PLLs.

### Power

All RocketIO transceivers in the FPGA, whether instantiated in the design or not, must be connected to power and ground. Unused transceivers can be powered by any 2.5V source, and passive filtering is not required.

### Power Down

The Power Down module is controlled by the transceiver's POWERDOWN input pin. The Power Down pin on the FPGA package has no effect on the transceiver.

## RocketIO and RocketIO X Feature Comparison

Table 7 summarizes the major differences between the RocketIO and RocketIO X MGTs. The ***RocketIO X Transceiver User Guide*** has more details, including a design migration guide in the Appendix.

*Table 7:* **RocketIO PMA versus RocketIO X PMA**

| | RocketIO X Transceiver | RocketIO Transceiver |
|---|---|---|
| **PCS Features:** | | |
| FPGA interface | 1, 2, 4, and 8 byte width | 1, 2, and 4 byte width |
| Coding support | 8B/10B and 64B/66B bypassable | 8B/10B bypassable |
| Gearbox/scrambler support | Yes | N/A |
| CRC Support | No | Yes |
| Half rate | No | Yes |
| **PMA Features:** | | |
| Baud rate | 2.488 Gb/s - 6.25 Gb/s(2) | 622 Mb/s - 3.125 Gb/s |
| Reference clock frequency tolerance | 350 PPM | 100 PPM |
| Reference clock multiplier | x16, x20, x32, x40 | x20 |
| Max run length | 75 | 75 |
| Receive equalization | Built-in analog linear, programmable | None |
| Output swing (differential p-p) | 200 mV to 1600 mV, programmable | 800 mV to 1600 mV, programmable |
| Pre-emphasis | 0% to 500%, programmable | 4 selectable levels from 10% to 33% |
| Slew rate control | 2 selectable levels | None |
| Termination | On-chip internal, 50Ω | On-chip internal, 50Ω/75Ω selectable |
| AC coupling capacitor | On-chip internal.<br>Can be AC- or DC-coupled externally | None |
| Transmit supply voltage (AVCCAUXTX) | 2.5V | 2.5V |
| Receive supply voltage (AVCCAUXRX) | 1.5V, 1.8V(1) | 2.5V |
| PMA configuration support | Direct, dynamic, and partial configuration | Partial configuration |
| **Others:** | | |
| JTAG support | Input only | None |
| Process technology | 0.13 µm | 0.25 µm |
| Available packages | Flip-chip only | Flip-chip and wire-bond |

**Notes:**
1. AVCCAUXRX for RocketIO X MGT is 1.5V (nominal) for 8B/10B-encoded data. For all other encoding protocols, AVCCAUXRX is 1.8V (nominal).
2. The XC2VPX70 operates at a fixed 4.25 Gb/s baud rate.

## Functional Description: Processor Block

This section briefly describes the interfaces and components of the Processor Block. The subsequent section, Functional Description: Embedded PowerPC 405 Core beginning on page 20, offers a summary of major PPC405 core features. For an in-depth discussion on both the Processor Block and PPC405, see tthe **PowerPC Processor Reference Guide** and the **PowerPC 405 Processor Block Reference Guide** available on the Xilinx website at **http://www.xilinx.com**.

### Processor Block Overview

Figure 14 shows the internal architecture of the Processor Block.

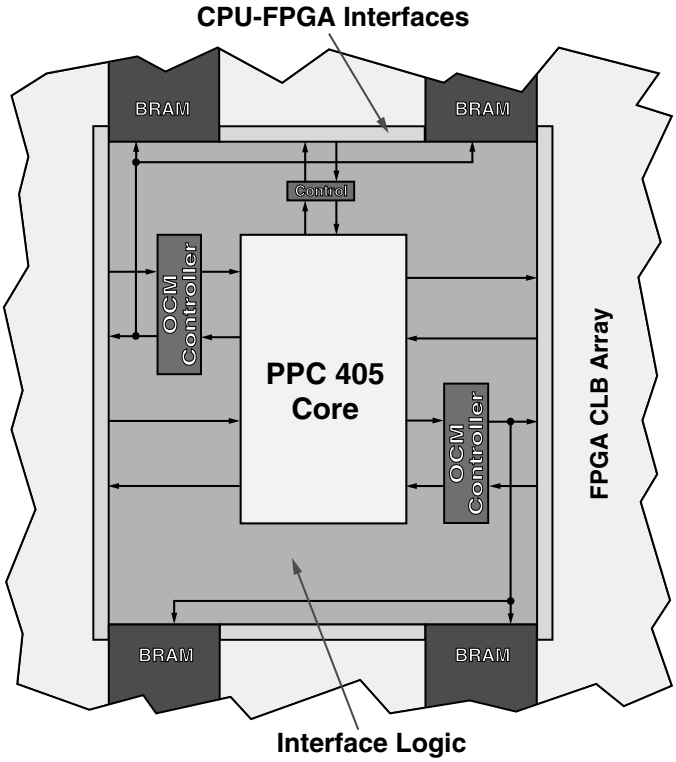


Processor Block = CPU Core + Interface Logic + CPU-FPGA Interface

DS083-2_03a_060701

*Figure 14:* **Processor Block Architecture**

Within the Virtex-II Pro Processor Block, there are four components:

- Embedded IBM PowerPC 405-D5 RISC CPU core
- On-Chip Memory (OCM) controllers and interfaces
- Clock/control interface logic
- CPU-FPGA Interfaces

### Embedded PowerPC 405 RISC Core

The PowerPC 405D5 core is a 0.13 µm implementation of the IBM PowerPC 405D4 core. The advanced process technology enables the embedded PowerPC 405 (PPC405) core to operate at 300+ MHz while maintaining low power consumption. Specially designed interface logic integrates the core with the surrounding CLBs, block RAMs, and general routing resources. Up to four Processor Blocks can be available in a single Virtex-II Pro device.

The embedded PPC405 core implements the PowerPC User Instruction Set Architecture (UISA), user-level registers, programming model, data types, and addressing modes for 32-bit fixed-point operations. 64-bit operations, auxiliary processor operations, and floating-point operations are trapped and can be emulated in software.

Most of the PPC405 core features are compatible with the specifications for the PowerPC Virtual Environment Architecture (VEA) and Operating Environment Architecture (OEA). They also provide a number of optimizations and extensions to the lower layers of the PowerPC Architecture. The full architecture of the PPC405 is defined by the PowerPC Embedded Environment and PowerPC UISA documentation, available from IBM.

### On-Chip Memory (OCM) Controllers

#### *Introduction*

The OCM controllers serve as dedicated interfaces between the block RAMs in the FPGA fabric (see 18 Kb Block SelectRAM+ Resources, page 44) and OCM signals available on the embedded PPC405 core. The OCM signals on the PPC405 core are designed to provide very quick access to a fixed amount of instruction and data memory space. The OCM controller provides an interface to both the 64-bit Instruction-Side Block RAM (ISBRAM) and the 32-bit Data-Side Block RAM (DSBRAM). The designer can choose to implement:

- ISBRAM only
- DSBRAM only
- Both ISBRAM and DSBRAM
- No ISBRAM and no DSBRAM

One of OCM's primary advantages is that it guarantees a fixed latency of execution for a higher level of determinism. Additionally, it reduces cache pollution and thrashing, since the cache remains available for caching code from other memory resources.

Typical applications for DSOCM include scratch-pad memory, as well as use of the dual-port feature of block RAM to enable bidirectional data transfer between processor and FPGA. Typical applications for ISOCM include storage of interrupt service routines.

#### *Functional Features*

**Common Features**

- Separate Instruction and Data memory interface between processor core and BRAMs in FPGA
- Dedicated interface to Device Control Register (DCR) bus for ISOCM and DSOCM

- Single-cycle and multi-cycle mode option for I-side and D-side interfaces
- Single cycle = one CPU clock cycle; multi-cycle = minimum of two and maximum of eight CPU clock cycles
- FPGA configurable DCR addresses within DSOCM and ISOCM.
- Independent 16 MB logical memory space available within PPC405 memory map for each of the DSOCM and ISOCM. The number of block RAMs in the device might limit the maximum amount of OCM supported.
- Maximum of 64K and 128K bytes addressable from DSOCM and ISOCM interfaces, respectively, using address outputs from OCM directly without additional decoding logic.

**Data-Side OCM (DSOCM)**

- 32-bit Data Read bus and 32-bit Data Write bus
- Byte write access to DSBRAM support
- Second port of dual port DSBRAM is available to read/write from an FPGA interface
- 22-bit address to DSBRAM port
- 8-bit DCR Registers: DSCNTL, DSARC
- Three alternatives to write into DSBRAM: BRAM initialization, CPU, FPGA H/W using second port

**Instruction-Side OCM (ISOCM)**

The ISOCM interface contains a 64-bit read only port, for instruction fetches, and a 32-bit write only port, to initialize or test the ISBRAM. When implementing the read only port, the user must deassert the write port inputs. The preferred method of initializing the ISBRAM is through the configuration bitstream.

- 64-bit Data Read Only bus (two instructions per cycle)
- 32-bit Data Write Only bus (through DCR)
- Separate 21-bit address to ISBRAM
- 8-bit DCR Registers: ISCNTL, ISARC
- 32-bit DCR Registers: ISINIT, ISFILL
- Two alternatives to write into ISBRAM: BRAM initialization, DCR and write instruction

## Clock/Control Interface Logic

The clock/control interface logic provides proper initialization and connections for PPC405 clock/power management, resets, PLB cycle control, and OCM interfaces. It also couples user signals between the FPGA fabric and the embedded PPC405 CPU core.

The processor clock connectivity is similar to CLB clock pins. It can connect either to global clock nets or general routing resources. Therefore the processor clock source can come from DCM, CLB, or user package pin.

## CPU-FPGA Interfaces

All Processor Block user pins link up with the general FPGA routing resources through the CPU-FPGA interface. Therefore processor signals have the same routability as other non-Processor Block user signals. Longlines and hex lines travel across the Processor Block both vertically and horizontally, allowing signals to route through the Processor Block.

### *Processor Local Bus (PLB) Interfaces*

The PPC405 core accesses high-speed system resources through PLB interfaces on the instruction and data cache controllers. The PLB interfaces provide separate 32-bit address/64-bit data buses for the instruction and data sides.

The cache controllers are both PLB masters. PLB arbiters are implemented in the FPGA fabric and are available as soft IP cores.

### *Device Control Register (DCR) Bus Interface*

The device control register (DCR) bus has 10 bits of address space for components external to the PPC405 core. Using the DCR bus to manage status and configuration registers reduces PLB traffic and improves system integrity. System resources on the DCR bus are protected or isolated from wayward code since the DCR bus is not part of the system memory map.

### *External Interrupt Controller (EIC) Interface*

Two level-sensitive user interrupt pins (critical and non-critical) are available. They can be either driven by user defined logic or Xilinx soft interrupt controller IP core outside the Processor Block.

### *Clock/Power Management (CPM) Interface*

The CPM interface supports several methods of clock distribution and power management. Three modes of operation that reduce power consumption below the normal operational level are available.

### *Reset Interface*

There are three user reset input pins (core, chip, and system) and three user reset output pins for different levels of reset, if required.

### *Debug Interface*

Debugging interfaces on the embedded PPC405 core, consisting of the JTAG and Trace ports, offer access to resources internal to the core and assist in software development. The JTAG port provides basic JTAG chip testing functionality as well as the ability for external debug tools to gain control of the processor for debug purposes. The Trace port furnishes programmers with a mechanism for acquiring instruction execution traces.

The JTAG port is compatible with IEEE Std 1149.1, which defines a test access port (TAP) and Boundary-Scan architecture. Extensions to the JTAG interface provide debuggers with processor control that includes stopping, starting, and stepping the PPC405 core. These extensions are compliant with the IEEE 1149.1 specifications for vendor-specific extensions.

The Trace port provides instruction execution trace information to an external trace tool. The PPC405 core is capable of back trace and forward trace. Back trace is the tracing of instructions prior to a debug event while forward trace is the tracing of instructions after a debug event.

The processor JTAG port and the FPGA JTAG port can be accessed independently, or the two can be programmatically linked together and accessed via the dedicated FPGA JTAG pins.

For detailed information on the PPC405 JTAG interface, please refer to the "JTAG Interface" section of the **PowerPC 405 Processor Block Reference Guide**

## CoreConnect™ Bus Architecture

The Processor Block is compatible with the CoreConnect™ bus architecture. Any CoreConnect compliant cores including Xilinx soft IP can integrate with the Processor Block through this high-performance bus architecture implemented on FPGA fabric.

The CoreConnect architecture provides three buses for interconnecting Processor Blocks, Xilinx soft IP, third party IP, and custom logic, as shown in Figure 15:

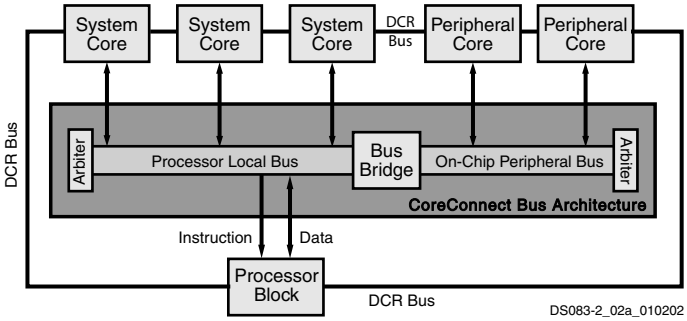


*Figure 15:* **CoreConnect Block Diagram**

- Processor Local Bus (PLB)
- On-Chip Peripheral Bus (OPB)
- Device Control Register (DCR) bus

High-performance peripherals connect to the high-bandwidth, low-latency PLB. Slower peripheral cores connect to the OPB, which reduces traffic on the PLB, resulting in greater overall system performance.

For more information, refer to:
**http://www-3.ibm.com/chips/techlib/techlib.nfs/productfamilies/CoreConnect_Bus_Architecture/**

# Functional Description: Embedded PowerPC 405 Core

This section offers a brief overview of the various functional blocks shown in Figure 16.

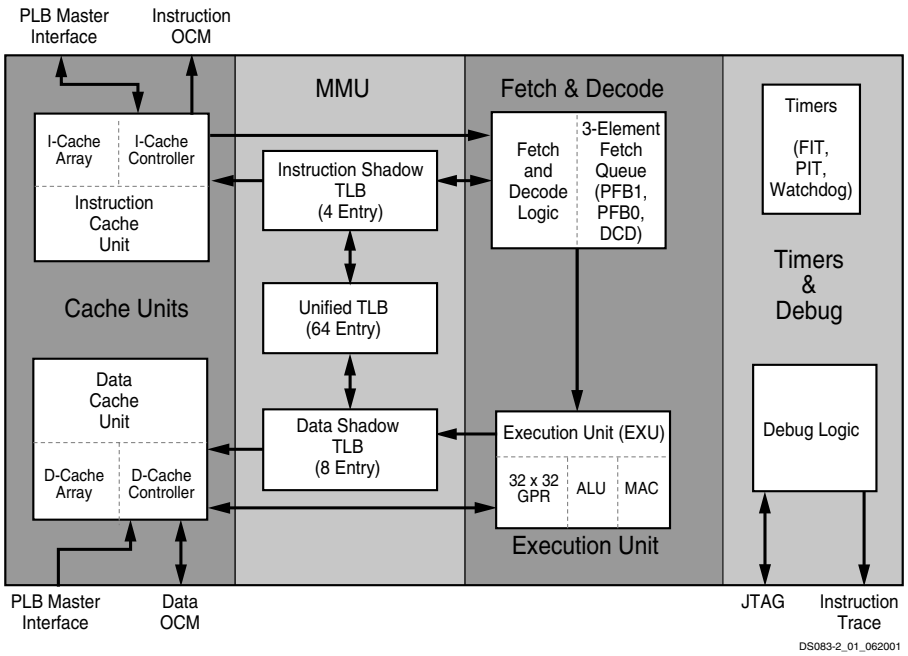


*Figure 16:* **Embedded PPC405 Core Block Diagram**

## Embedded PPC405 Core

The embedded PPC405 core is a 32-bit Harvard architecture processor. Figure 16 illustrates its functional blocks:

- Cache units
- Memory Management unit
- Fetch Decode unit

- Execution unit
- Timers
- Debug logic unit

It operates on instructions in a five stage pipeline consisting of a fetch, decode, execute, write-back, and load write-back stage. Most instructions execute in a single cycle, including loads and stores.

## Instruction and Data Cache

The embedded PPC405 core provides an instruction cache unit (ICU) and a data cache unit (DCU) that allow concurrent accesses and minimize pipeline stalls. The instruction and data cache array are 16 KB each. Both cache units are two-way set associative. Each way is organized into 256 lines of 32 bytes (eight words). The instruction set provides a rich assortment of cache control instructions, including instructions to read tag information and data arrays.

The PPC405 core accesses external memory through the instruction (ICU) and data cache units (DCU). The cache units each include a 64-bit PLB master interface, cache arrays, and a cache controller. The ICU and DCU handle cache misses as requests over the PLB to another PLB device such as an external bus interface unit. Cache hits are handled as single cycle memory accesses to the instruction and data caches.

### *Instruction Cache Unit (ICU)*

The ICU provides one or two instructions per cycle to the instruction queue over a 64-bit bus. A line buffer (built into the output of the array for manufacturing test) enables the ICU to be accessed only once for every four instructions, to reduce power consumption by the array.

The ICU can forward any or all of the four or eight words of a line fill to the EXU to minimize pipeline stalls caused by cache misses. The ICU aborts speculative fetches abandoned by the EXU, eliminating unnecessary line fills and enabling the ICU to handle the next EXU fetch. Aborting abandoned requests also eliminates unnecessary external bus activity, thereby increasing external bus utilization.

### *Data Cache Unit (DCU)*

The DCU transfers one, two, three, four, or eight bytes per cycle, depending on the number of byte enables presented by the CPU. The DCU contains a single-element command and store data queue to reduce pipeline stalls; this queue enables the DCU to independently process load/store and cache control instructions. Dynamic PLB request prioritization reduces pipeline stalls even further. When the DCU is busy with a low-priority request while a subsequent storage operation requested by the CPU is stalled; the DCU automatically increases the priority of the current request to the PLB.

The DCU provides additional features that allow the programmer to tailor its performance for a given application. The DCU can function in write-back or write-through mode, as controlled by the Data Cache Write-through Register (DCWR) or the Translation Look-aside Buffer (TLB); the cache controller can be tuned for a balance of performance and memory coherency. Write-on-allocate, controlled by the store word on allocate (SWOA) field of the Core Configuration Register 0 (CCR0), can inhibit line fills caused by store misses, to further reduce potential pipeline stalls and unwanted external bus traffic.

## Fetch and Decode Logic

The fetch/decode logic maintains a steady flow of instructions to the execution unit by placing up to two instructions in the fetch queue. The fetch queue consists of three buffers: pre-fetch buffer 1 (PFB1), pre-fetch buffer 0 (PFB0), and decode (DCD). The fetch logic ensures that instructions proceed directly to decode when the queue is empty.

Static branch prediction as implemented on the PPC405 core takes advantage of some standard statistical properties of code. Branches with negative address displacement are by default assumed taken. Branches that do not test the condition or count registers are also predicted as taken. The PPC405 core bases branch prediction upon these default conditions when a branch is not resolved and speculatively fetches along the predicted path. The default prediction can be overridden by software at assembly or compile time.

Branches are examined in the decode and pre-fetch buffer 0 fetch queue stages. Two branch instructions can be handled simultaneously. If the branch in decode is not taken, the fetch logic fetches along the predicted path of the branch instruction in pre-fetch buffer 0. If the branch in decode is taken, the fetch logic ignores the branch instruction in pre-fetch buffer 0.

## Execution Unit

The embedded PPC405 core has a single issue execution unit (EXU) containing the register file, arithmetic logic unit (ALU), and the multiply-accumulate (MAC) unit. The execution unit performs all 32-bit PowerPC integer instructions in hardware.

The register file is comprised of thirty-two 32-bit general purpose registers (GPR), which are accessed with three read ports and two write ports. During the decode stage, data is read out of the GPRs and fed to the execution unit. Likewise, during the write-back stage, results are written to the GPR. The use of the five ports on the register file enables either a load or a store operation to execute in parallel with an ALU operation.

## Memory Management Unit (MMU)

The embedded PPC405 core has a 4 GB address space, which is presented as a flat address space.

The MMU provides address translation, protection functions, and storage attribute control for embedded applications. The MMU supports demand-paged virtual memory and other management schemes that require precise control of logical-to-physical address mapping and flexible

memory protection. Working with appropriate system-level software, the MMU provides the following functions:

- Translation of the 4 GB effective address space into physical addresses
- Independent enabling of instruction and data translation/protection
- Page-level access control using the translation mechanism
- Software control of page replacement strategy
- Additional control over protection using zones
- Storage attributes for cache policy and speculative memory access control

The MMU can be disabled under software control. If the MMU is not used, the PPC405 core provides other storage control mechanisms.

### *Translation Look-Aside Buffer (TLB)*

The Translation Look-Aside Buffer (TLB) is the hardware resource that controls translation and protection. It consists of 64 entries, each specifying a page to be translated. The TLB is fully associative; a given page entry can be placed anywhere in the TLB. The translation function of the MMU occurs pre-cache. Cache tags and indexing use physical addresses.

Software manages the establishment and replacement of TLB entries. This gives system software significant flexibility in implementing a custom page replacement strategy. For example, to reduce TLB thrashing or translation delays, software can reserve several TLB entries in the TLB for globally accessible static mappings. The instruction set provides several instructions used to manage TLB entries. These instructions are privileged and require the software to be executing in supervisor state. Additional TLB instructions are provided to move TLB entry fields to and from GPRs.

The MMU divides logical storage into pages. Eight page sizes (1 KB, 4 KB, 16 KB, 64 KB, 256 KB, 1 MB, 4 MB, and 16 MB) are simultaneously supported, such that, at any given time, the TLB can contain entries for any combination of page sizes. In order for a logical to physical translation to exist, a valid entry for the page containing the logical address must be in the TLB. Addresses for which no TLB entry exists cause TLB-Miss exceptions.

To improve performance, four instruction-side and eight data-side TLB entries are kept in shadow arrays. The shadow arrays allow single-cycle address translation and also help to avoid TLB contention between load/store and instruction fetch operations. Hardware manages the replacement and invalidation of shadow-TLB entries; no system software action is required.

### *Memory Protection*

When address translation is enabled, the translation mechanism provides a basic level of protection.

The Zone Protection Register (ZPR) enables the system software to override the TLB access controls. For example, the ZPR provides a way to deny read access to application programs. The ZPR can be used to classify storage by type; access by type can be changed without manipulating individual TLB entries.

The PowerPC Architecture provides WIU0GE (write-back / write-through, cacheability, user-defined 0, guarded, endian) storage attributes that control memory accesses, using bits in the TLB or, when address translation is disabled, storage attribute control registers.

When address translation is enabled, storage attribute control bits in the TLB control the storage attributes associated with the current page. When address translation is disabled, bits in each storage attribute control register control the storage attributes associated with storage regions. Each storage attribute control register contains 32 fields. Each field sets the associated storage attribute for a 128 MB memory region.

## Timers

The embedded PPC405 core contains a 64-bit time base and three timers, as shown in Figure 17:

- Programmable Interval Timer (PIT)
- Fixed Interval Timer (FIT)
- Watchdog Timer (WDT)

The time base counter increments either by an internal signal equal to the CPU clock rate or by a separate external timer clock signal. No interrupts are generated when the time base rolls over. The three timers are synchronous with the time base.

The PIT is a 32-bit register that decrements at the same rate as the time base is incremented. The user loads the PIT register with a value to create the desired delay. When the register reaches zero, the timer stops decrementing and generates a PIT interrupt. Optionally, the PIT can be programmed to auto-reload the last value written to the PIT register, after which the PIT continues to decrement.

The FIT generates periodic interrupts based on one of four selectable bits in the time base. When the selected bit changes from 0 to 1, the PPC405 core generates a FIT interrupt.

The WDT provides a periodic critical-class interrupt based on a selected bit in the time base. This interrupt can be used for system error recovery in the event of software or system lockups. Users may select one of four time periods for the interval and the type of reset generated if the WDT expires twice without an intervening clear from software. If enabled, the watchdog timer generates a reset unless an exception handler updates the WDT status bit before the timer has completed two of the selected timer intervals.

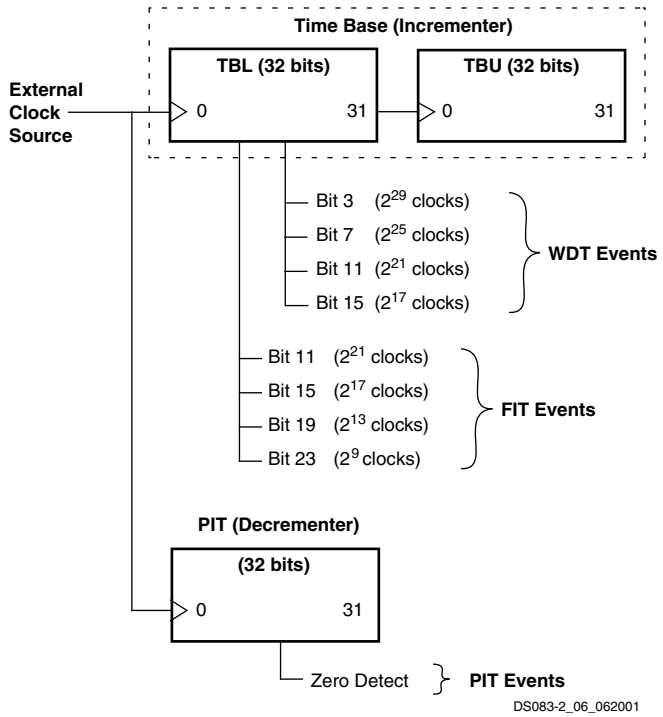


*Figure 17:* **Relationship of Timer Facilities to Base Clock**

## Interrupts

The PPC405 provides an interface to an interrupt controller that is logically outside the PPC405 core. This controller combines the asynchronous interrupt inputs and presents them to the embedded core as a single interrupt signal. The sources of asynchronous interrupts are external signals, the JTAG/debug unit, and any implemented peripherals.

## Debug Logic

All architected resources on the embedded PPC405 core can be accessed through the debug logic. Upon a debug event, the PPC405 core provides debug information to an external debug tool. Three different types of tools are supported depending on the debug mode: ROM monitors, JTAG debuggers, and instruction trace tools.

In internal debug mode, a debug event enables exception-handling software at a dedicated interrupt vector to take over the CPU core and communicate with a debug tool. The debug tool has read-write access to all registers and can set hardware or software breakpoints. ROM monitors typically use the internal debug mode.

In external debug mode, the CPU core enters stop state (stops instruction execution) when a debug event occurs. This mode offers a debug tool read-write access to all registers in the PPC405 core. Once the CPU core is in stop state, the debug tool can start the CPU core, step an instruction, freeze the timers, or set hardware or software break points. In addition to CPU core control, the debug logic is capable of writing instructions into the instruction cache, eliminating the need for external memory during initial board bring-up. Communication to a debug tool using external debug mode is through the JTAG port.

Debug wait mode offers the same functionality as external debug mode with one exception. In debug wait mode, the CPU core goes into wait state instead of stop state after a debug event. Wait state is identical to stop state until an interrupt occurs. In wait state, the PPC405 core can vector to an exception handler, service an interrupt and return to wait state. This mode is particularly useful when debugging real time control systems.

Real-time trace debug mode is always enabled. The debug logic continuously broadcasts instruction trace information to the trace port. When a debug event occurs, the debug logic signals an external debug tool to save instruction trace information before and after the event. The number of instructions traced depends on the trace tool.

Debug events signal the debug logic to stop the CPU core, put the CPU core in debug wait state, cause a debug exception or save instruction trace information.

## Big Endian and Little Endian Support

The embedded PPC405 core supports big endian or little endian byte ordering for instructions stored in external memory. Since the PowerPC architecture is big endian internally, the ICU rearranges the instructions stored as little endian into the big endian format. Therefore, the instruction cache always contains instructions in big endian format so that the byte ordering is correct for the execution unit. This feature allows the 405 core to be used in systems designed to function in a little endian environment.

# Functional Description: FPGA

## Input/Output Blocks (IOBs)

Virtex-II Pro I/O blocks (IOBs) are provided in groups of two or four on the perimeter of each device. Each IOB can be used as input and/or output for single-ended I/Os. Two IOBs can be used as a differential pair. A differential pair is always connected to the same switch matrix, as shown in Figure 18.

IOB blocks are designed for high-performance I/O, supporting 22 single-ended standards, as well as differential signaling with LVDS, LDT, bus LVDS, and LVPECL.

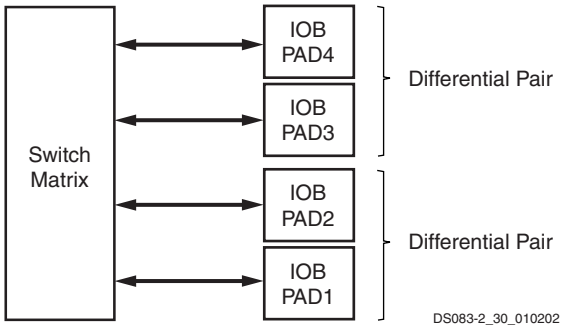


*Figure 18:* **Virtex-II Pro Input/Output Tile**

Note: Differential I/Os must use the same clock.

### *Supported I/O Standards*

Virtex-II Pro IOB blocks feature SelectIO-Ultra inputs and outputs that support a wide variety of I/O signaling standards. In addition to the internal supply voltage ($V_{CCINT}$ = 1.5V), output driver supply voltage ($V_{CCO}$) is dependent on the I/O standard (see Table 8 and Table 9). An auxiliary supply voltage ($V_{CCAUX}$ = 2.5V) is required, regardless of the I/O standard used. For exact supply voltage absolute maximum ratings, see Virtex-II Pro and Virtex-II Pro X Platform FPGAs: DC and Switching Characteristics.

All of the user IOBs have fixed-clamp diodes to $V_{CCO}$ and to ground. The IOBs are not compatible or compliant with 5V I/O standards (not 5V-tolerant).

Table 10 lists supported I/O standards with Digitally Controlled Impedance. See Digitally Controlled Impedance (DCI), page 31.

*Table 8:* **Supported Single-Ended I/O Standards**

| IOSTANDARD Attribute | Output $V_{CCO}$ | Input $V_{CCO}$ | Input $V_{REF}$ | Board Termination Voltage ($V_{TT}$) |
|---|---|---|---|---|
| LVTTL (1) | 3.3 | 3.3 | N/R | N/R |
| LVCMOS33 (1) | 3.3 | 3.3 | N/R | N/R |
| LVCMOS25 | 2.5 | 2.5 | N/R | N/R |
| LVCMOS18 | 1.8 | 1.8 | N/R | N/R |
| LVCMOS15 | 1.5 | 1.5 | N/R | N/R |
| PCI33_3 | Note (2) | Note (2) | N/R | N/R |
| PCI66_3 | Note (2) | Note (2) | N/R | N/R |
| PCIX | Note (2) | Note (2) | N/R | N/R |
| GTL | Note (3) | Note (3) | 0.8 | 1.2 |
| GTLP | Note (3) | Note (3) | 1.0 | 1.5 |
| HSTL_I | 1.5 | N/R | 0.75 | 0.75 |
| HSTL_II | 1.5 | N/R | 0.75 | 0.75 |
| HSTL_III | 1.5 | N/R | 0.9 | 1.5 |
| HSTL_IV | 1.5 | N/R | 0.9 | 1.5 |
| HSTL_I_18 | 1.8 | N/R | 0.9 | 0.9 |
| HSTL_II_18 | 1.8 | N/R | 0.9 | 0.9 |
| HSTL_III _18 | 1.8 | N/R | 1.1 | 1.8 |
| HSTL_IV_18 | 1.8 | N/R | 1.1 | 1.8 |
| SSTL2_I | 2.5 | N/R | 1.25 | 1.25 |
| SSTL2_II | 2.5 | N/R | 1.25 | 1.25 |
| SSTL18_I (4) | 1.8 | N/R | 0.9 | 0.9 |
| SSTL18_II | 1.8 | N/R | 0.9 | 0.9 |

**Notes:**
1. Refer to **XAPP659** for more details on interfacing to these 3.3V standards.
2. For PCI and PCI-X standards, refer to **XAPP653**.
3. $V_{CCO}$ of GTL or GTLP should not be lower than the termination voltage or the voltage seen at the I/O pad. *Example:* If the pin High level is 1.5V, connect $V_{CCO}$ to 1.5V.
4. SSTL18_I is not a JEDEC-supported standard.
5. N/R = no requirement.

*Table 9:* **Supported Differential Signal I/O Standards**

| I/O Standard | Output $V_{CCO}$ | Input $V_{CCO}$ | Input $V_{REF}$ | Output $V_{OD}$ |
|---|---|---|---|---|
| LDT_25 | 2.5 | N/R | N/R | 0.500 – 0.740 |
| LVDS_25 | 2.5 | N/R | N/R | 0.247 – 0.454 |
| LVDSEXT_25 | 2.5 | N/R | N/R | 0.440 – 0.820 |
| BLVDS_25 | 2.5 | N/R | N/R | 0.250 – 0.450 |
| ULVDS_25 | 2.5 | N/R | N/R | 0.500 – 0.740 |
| LVPECL_25 | 2.5 | N/R | N/R | 0.345 – 1.185 |
| LDT_25_DT(1) | 2.5 | 2.5 | N/R | 0.500 – 0.740 |
| LVDS_25_DT(1) | 2.5 | 2.5 | N/R | 0.247 – 0.454 |
| LVDSEXT_25_DT(1) | 2.5 | 2.5 | N/R | 0.330 – 0.700 |
| ULVDS_25_DT(1) | 2.5 | 2.5 | N/R | 0.500 – 0.740 |

**Notes:**
1. These standards support on-chip 100Ω termination.
2. N/R = no requirement.

*Table 10:* **Supported DCI I/O Standards**

| I/O Standard | Output $V_{CCO}$ | Input $V_{CCO}$ | Input $V_{REF}$ | Termination Type |
|---|---|---|---|---|
| LVDCI_33(1) | 3.3 | 3.3 | N/R | Series |
| LVDCI_25 | 2.5 | 2.5 | N/R | Series |
| LVDCI_DV2_25 | 2.5 | 2.5 | N/R | Series |
| LVDCI_18 | 1.8 | 1.8 | N/R | Series |
| LVDCI_DV2_18 | 1.8 | 1.8 | N/R | Series |
| LVDCI_15 | 1.5 | 1.5 | N/R | Series |
| LVDCI_DV2_15 | 1.5 | 1.5 | N/R | Series |
| GTL_DCI | 1.2 | 1.2 | 0.8 | Single |
| GTLP_DCI | 1.5 | 1.5 | 1.0 | Single |
| HSTL_I_DCI | 1.5 | 1.5 | 0.75 | Split |
| HSTL_II_DCI | 1.5 | 1.5 | 0.75 | Split |
| HSTL_III_DCI | 1.5 | 1.5 | 0.9 | Single |
| HSTL_IV_DCI | 1.5 | 1.5 | 0.9 | Single |
| HSTL_I_DCI_18 | 1.8 | 1.8 | 0.9 | Split |
| HSTL_II_DCI_18 | 1.8 | 1.8 | 0.9 | Split |
| HSTL_III_DCI_18 | 1.8 | 1.8 | 1.1 | Single |
| HSTL_IV_DCI_18 | 1.8 | 1.8 | 1.1 | Single |
| SSTL2_I_DCI(2) | 2.5 | 2.5 | 1.25 | Split |
| SSTL2_II_DCI(2) | 2.5 | 2.5 | 1.25 | Split |
| SSTL18_I_DCI (3) | 1.8 | 1.8 | 0.9 | Split |
| SSTL18_II_DCI | 1.8 | 1.8 | 0.9 | Split |

*Table 10:* **Supported DCI I/O Standards *(Continued)***

| I/O Standard | Output $V_{CCO}$ | Input $V_{CCO}$ | Input $V_{REF}$ | Termination Type |
|---|---|---|---|---|
| LVDS_25_DCI | 2.5 | 2.5 | N/R | Split |
| LVDSEXT_25_DCI | 2.5 | 2.5 | N/R | Split |

**Notes:**
1. LVDCI_XX is LVCMOS output controlled impedance buffers, matching all or half of the reference resistors.
2. These are SSTL compatible.
3. SSTL18_I is not a JEDEC-supported standard.
4. N/R = no requirement.

## *Logic Resources*

IOB blocks include six storage elements, as shown in Figure 19.

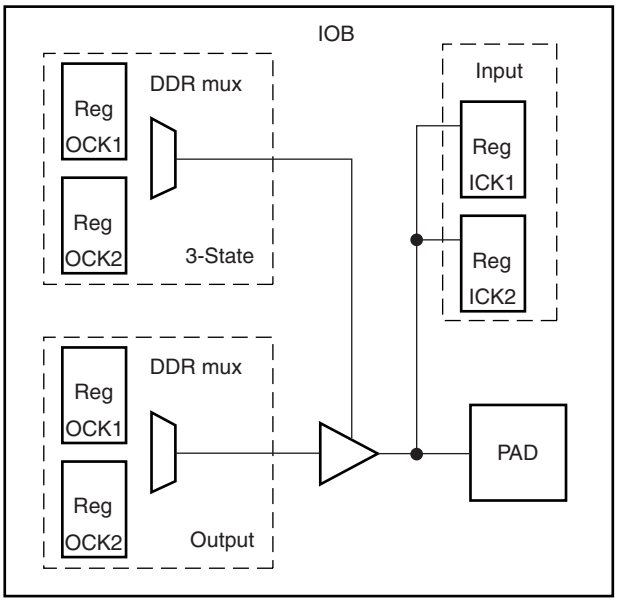


*Figure 19:* **Virtex-II Pro IOB Block**

Each storage element can be configured either as an edge-triggered D-type flip-flop or as a level-sensitive latch. On the input, output, and 3-state path, one or two DDR registers can be used.

Double data rate is directly accomplished by the two registers on each path, clocked by the rising edges (or falling edges) from two different clock nets. The two clock signals are generated by the DCM and must be 180 degrees out of phase, as shown in Figure 20. There are two input, output, and 3-state data signals, each being alternately clocked out.

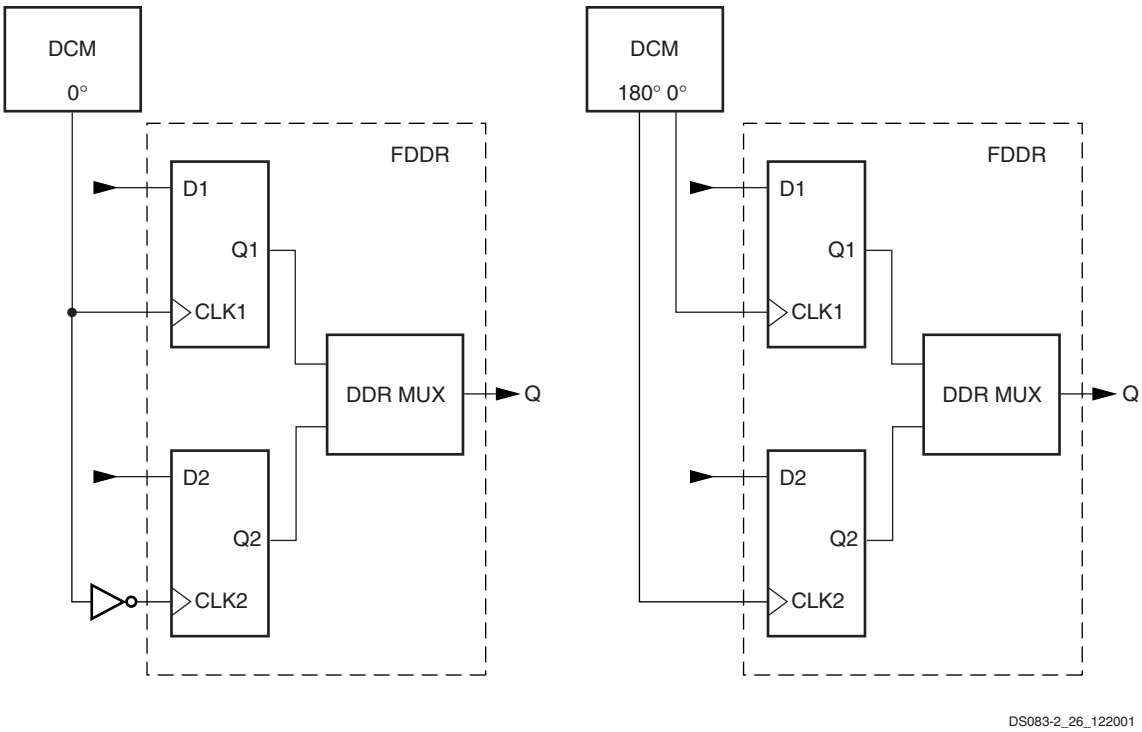


*Figure 20:* **Double Data Rate Registers**

This DDR mechanism can be used to mirror a copy of the clock on the output. This is useful for propagating a clock along the data that has an identical delay. It is also useful for multiple clock generation, where there is a unique clock driver for every clock load. Virtex-II Pro devices can produce many copies of a clock with very little skew.

Each group of two registers has a clock enable signal (ICE for the input registers, OCE for the output registers, and TCE for the 3-state registers). The clock enable signals are active High by default. If left unconnected, the clock enable for that storage element defaults to the active state.

Each IOB block has common synchronous or asynchronous set and reset (SR and REV signals). Two neighboring IOBs have a shared routing resource connecting the ICLK and OTCLK pins on pairs of IOBs. If two adjacent IOBs using DDR registers do not share the same clock signals on their clock pins (ICLK1, ICLK2, OTCLK1, and OTCLK2), one of the clock signals will be unroutable.

The IOB pairing is identical to the LVDS IOB pairs. Hence, the package pin-out table can also be used for pin assignment to avoid conflict.

SR forces the storage element into the state specified by the SRHIGH or SRLOW attribute. SRHIGH forces a logic 1. SRLOW forces a logic “0”. When SR is used, a second input (REV) forces the storage element into the opposite state. The reset condition predominates over the set condition. The initial state after configuration or global initialization state is defined by a separate INIT0 and INIT1 attribute. By default, the SRLOW attribute forces INIT0, and the SRHIGH attribute forces INIT1.

For each storage element, the SRHIGH, SRLOW, INIT0, and INIT1 attributes are independent. Synchronous or asynchronous set / reset is consistent in an IOB block.

All the control signals have independent polarity. Any inverter placed on a control input is automatically absorbed.

Each register or latch, independent of all other registers or latches, can be configured as follows:

- No set or reset
- Synchronous set
- Synchronous reset
- Synchronous set and reset
- Asynchronous set (preset)
- Asynchronous reset (clear)
- Asynchronous set and reset (preset and clear)

The synchronous reset overrides a set, and an asynchronous clear overrides a preset.

Refer to Figure 21.

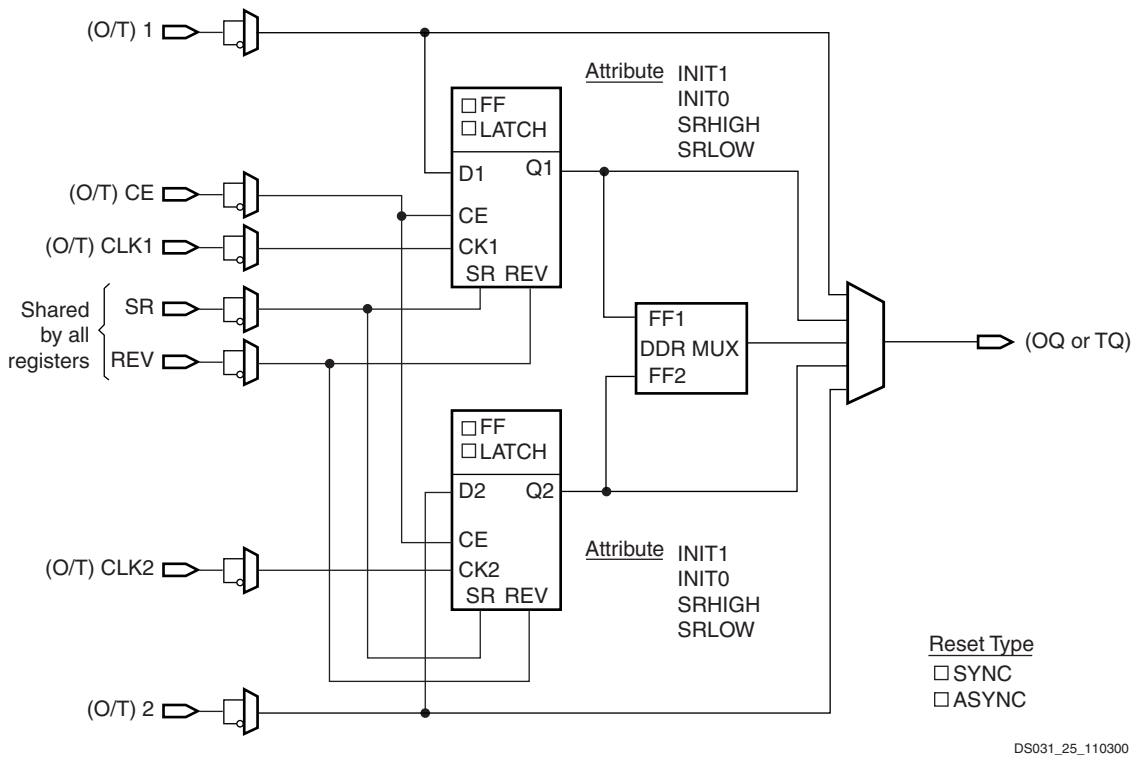


*Figure 21:* **Register / Latch Configuration in an IOB Block**

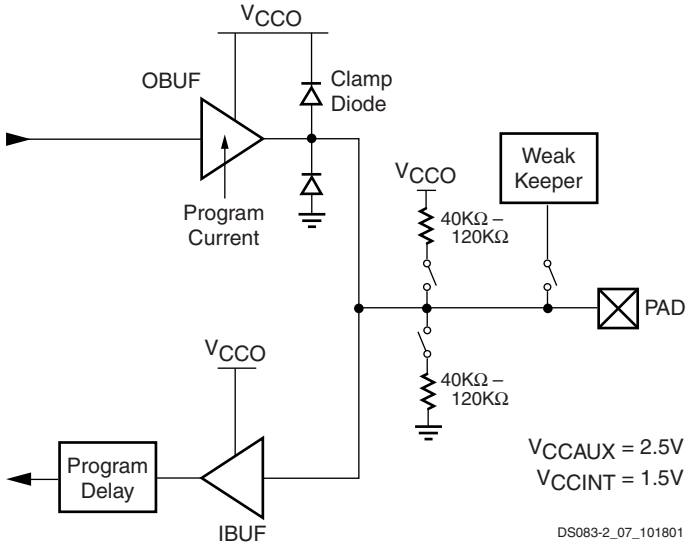


*Figure 22:* **LVTTL, LVCMOS, or PCI SelectIO-Ultra Standard**

### *Input/Output Individual Options*

Each device pad has optional pull-up/pull-down resistors and weak-keeper circuit in the LVTTL, LVCMOS, and PCI SelectIO-Ultra configurations, as illustrated in Figure 22. Values of the optional pull-up and pull-down resistors fall within a range of 40 KΩ to 120 KΩ when $V_{CCO}$ = 2.5V (from 2.38V to 2.63V only). The clamp diodes are always present, even when power is not.

The optional weak-keeper circuit is connected to each user I/O pad. When selected, the circuit monitors the voltage on the pad and weakly drives the pin High or Low. If the pin is connected to a multiple-source signal, the weak-keeper holds the signal in its last state if all drivers are disabled. Maintaining a valid logic level in this way eliminates bus chatter. An enabled pull-up or pull-down overrides the weak-keeper circuit.

LVCMOS25 sinks and sources current up to 24 mA. The current is programmable (see Table 11). Drive strength and slew rate controls for each output driver minimize bus transients. For LVDCI and LVDCI_DV2 standards, drive strength and slew rate controls are not available.

*Table 11:* **LVCMOS Programmable Currents (Sink and Source)**

| SelectIO-Ultra | Programmable Current (Worst-Case Guaranteed Minimum) | | | | | | |
|---|---|---|---|---|---|---|---|
| LVTTL | 2 mA | 4 mA | 6 mA | 8 mA | 12 mA | 16 mA | 24 mA |
| LVCMOS33 | 2 mA | 4 mA | 6 mA | 8 mA | 12 mA | 16 mA | 24 mA |
| LVCMOS25 | 2 mA | 4 mA | 6 mA | 8 mA | 12 mA | 16 mA | 24 mA |
| LVCMOS18 | 2 mA | 4 mA | 6 mA | 8 mA | 12 mA | 16 mA | n/a |
| LVCMOS15 | 2 mA | 4 mA | 6 mA | 8 mA | 12 mA | 16 mA | n/a |

Figure 23 shows the SSTL2, SSTL18, and HSTL configurations. HSTL can sink current up to 48 mA. (HSTL IV)

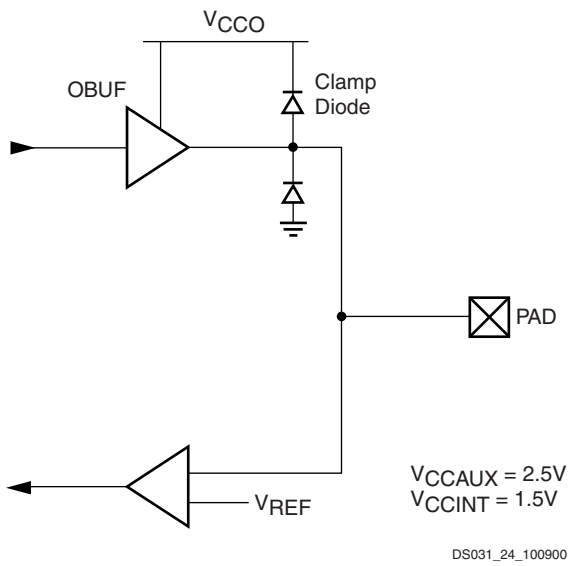


*Figure 23:* **SSTL or HSTL SelectIO-Ultra Standards**

All pads are protected against damage from electrostatic discharge (ESD) and from over-voltage transients. Virtex-II Pro uses two memory cells to control the configuration of an I/O as an input. This is to reduce the probability of an I/O configured as an input from flipping to an output when subjected to a single event upset (SEU) in space applications.

Prior to configuration, all outputs not involved in configuration are forced into their high-impedance state. The pull-down resistors and the weak-keeper circuits are inactive. The dedicated pin HSWAP_EN controls the pull-up resistors prior to configuration. By default, HSWAP_EN is set High, which disables the pull-up resistors on user I/O pins. When HSWAP_EN is set Low, the pull-up resistors are activated on user I/O pins.

All Virtex-II Pro IOBs (except RocketIO transceiver pins) support IEEE 1149.1 and IEEE 1532 compatible Boundary-Scan testing.

### *Input Path*

The Virtex-II Pro IOB input path routes input signals directly to internal logic and / or through an optional input flip-flop or latch, or through the DDR input registers. An optional delay element at the D-input of the storage element eliminates pad-to-pad hold time. The delay is matched to the internal clock-distribution delay of the Virtex-II Pro device, and when used, assures that the pad-to-pad hold time is zero.

Each input buffer can be configured to conform to any of the low-voltage signaling standards supported. In some of these standards the input buffer utilizes a user-supplied threshold voltage, $V_{REF}$. The need to supply $V_{REF}$ imposes constraints on which standards can be used in the same bank. See I/O banking description.

### *Output Path*

The output path includes a 3-state output buffer that drives the output signal onto the pad. The output and / or the 3-state signal can be routed to the buffer directly from the internal logic or through an output / 3-state flip-flop or latch, or through the DDR output / 3-state registers.

Each output driver can be individually programmed for a wide range of low-voltage signaling standards. In most signaling standards, the output High voltage depends on an externally supplied $V_{CCO}$ voltage. The need to supply $V_{CCO}$ imposes constraints on which standards can be used in the same bank. See I/O banking description.

### *I/O Banking*

Some of the I/O standards described above require $V_{CCO}$ and $V_{REF}$ voltages. These voltages are externally supplied and connected to device pins that serve groups of IOB blocks, called banks. Consequently, restrictions exist about which I/O standards can be combined within a given bank.

Eight I/O banks result from dividing each edge of the FPGA into two banks, as shown in Figure 24 and Figure 25. Each bank has multiple $V_{CCO}$ pins, all of which must be connected to the same voltage. This voltage is determined by the output standards in use.

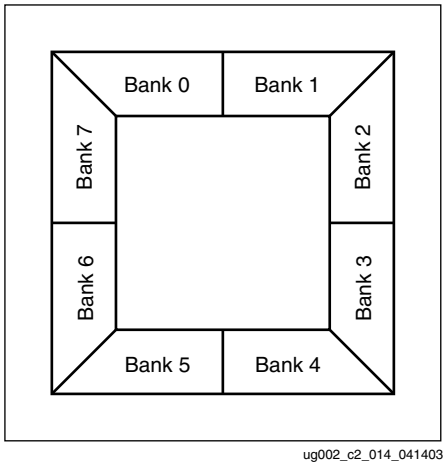


*Figure 24:* **I/O Banks: Wire-Bond Packages (FG) Top View**

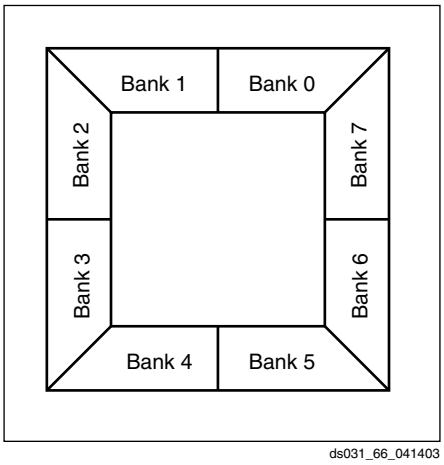


*Figure 25:* **I/O Banks: Flip-Chip Packages (FF) Top View**

Some input standards require a user-supplied threshold voltage ($V_{REF}$), and certain user-I/O pins are automatically configured as $V_{REF}$ inputs. Approximately one in six of the I/O pins in the bank assume this role.

$V_{REF}$ pins within a bank are interconnected internally, thus only one $V_{REF}$ voltage can be used within each bank. However, for correct operation, all $V_{REF}$ pins in the bank must be connected to the external reference voltage source.

The $V_{CCO}$ and the $V_{REF}$ pins for each bank appear in the device pinout tables. Within a given package, the number of $V_{REF}$ and $V_{CCO}$ pins can vary depending on the size of device. In larger devices, more I/O pins convert to $V_{REF}$ pins. Since these are always a superset of the $V_{REF}$ pins used for smaller devices, it is possible to design a PCB that permits migration to a larger device if necessary.

All $V_{REF}$ pins for the largest device anticipated must be connected to the $V_{REF}$ voltage and not used for I/O. In smaller devices, some $V_{CCO}$ pins used in larger devices do not connect within the package. These unconnected pins can be left unconnected externally, or, if necessary, they can be connected to $V_{CCO}$ to permit migration to a larger device.

### *Rules for Combining I/O Standards in the Same Bank*

The following rules must be obeyed to combine different input, output, and bi-directional standards in the same bank:

1. **Combining output standards only.** Output standards with the same output $V_{CCO}$ requirement can be combined in the same bank.

   *Compatible example:*
   SSTL2_I and LVDS_25 outputs

   *Incompatible example:*
   SSTL2_I (output $V_{CCO}$ = 2.5V) and
   LVCMOS33 (output $V_{CCO}$ = 3.3V) outputs

2. **Combining input standards only.** Input standards with the same input $V_{CCO}$ and input $V_{REF}$ requirements can be combined in the same bank.

   *Compatible example:*
   LVCMOS15 and HSTL_IV inputs

   *Incompatible example:*
   LVCMOS15 (input $V_{CCO}$ = 1.5V) and
   LVCMOS18 (input $V_{CCO}$ = 1.8V) inputs

   *Incompatible example:*
   HSTL_I_DCI_18 ($V_{REF}$ = 0.9V) and
   HSTL_IV_DCI_18 ($V_{REF}$ = 1.1V) inputs

3. **Combining input standards and output standards.** Input standards and output standards with the same input $V_{CCO}$ and output $V_{CCO}$ requirement can be combined in the same bank.

   *Compatible example:*
   LVDS_25 output and HSTL_I input

   *Incompatible example:*
   LVDS_25 output (output $V_{CCO}$ = 2.5V) and
   HSTL_I_DCI_18 input (input $V_{CCO}$ = 1.8V)

4. **Combining bi-directional standards with input or output standards.** When combining bi-directional I/O with other standards, make sure the bi-directional standard can meet rules 1 through 3 above.

5. **Additional rules for combining DCI I/O standards.**

   a. No more than one Single Termination type (input or output) is allowed in the same bank.

      *Incompatible example:*
      HSTL_IV_DCI input and HSTL_III_DCI input

   b. No more than one Split Termination type (input or output) is allowed in the same bank.

      *Incompatible example:*
      HSTL_I_DCI input and HSTL_II_DCI input

The implementation tools will enforce the above design rules.

Table 12, page 30, summarizes all standards and voltage supplies.

*Table 12:* **Summary of Voltage Supply Requirements for All Input and Output Standards**

| I/O Standard | $V_{CCO}$ Output | $V_{CCO}$ Input | $V_{REF}$ Input | Termination Type Output | Termination Type Input |
|---|---|---|---|---|---|
| LVTTL(1) | 3.3 | 3.3 | N/R | N/R | N/R |
| LVCMOS33(1) | | | N/R | N/R | N/R |
| LVDCI_33(1) | | | N/R | Series | N/R |
| PCIX(2) | | | N/R | N/R | N/R |
| PCI33_3(2) | | | N/R | N/R | N/R |
| PCI66_3(2) | | | N/R | N/R | N/R |
| LVDS_25 | 2.5 | Note (3) | N/R | N/R | N/R |
| LVDSEXT_25 | | | N/R | N/R | N/R |
| LDT_25 | | | N/R | N/R | N/R |
| ULVDS_25 | | | N/R | N/R | N/R |
| BLVDS_25 | | | N/R | N/R | N/R |
| LVPECL_25 | | | N/R | N/R | N/R |
| SSTL2_I | | | 1.25 | N/R | N/R |
| SSTL2_II | | | 1.25 | N/R | N/R |
| LVCMOS25 | | 2.5 | N/R | N/R | N/R |
| LVDCI_25 | | | N/R | Series | N/R |
| LVDCI_DV2_25 | | | N/R | Series | N/R |
| LVDS_25_DCI | | | N/R | N/R | Split |
| LVDSEXT_25_DCI | | | N/R | N/R | Split |
| SSTL2_I_DCI | | | 1.25 | N/R | Split |
| SSTL2_II_DCI | | | 1.25 | Split | Split |
| LVDS_25_DT | | | N/R | N/R | N/R |
| LVDSEXT_25_DT | | | N/R | N/R | N/R |
| LDT_25_DT | | | N/R | N/R | N/R |
| ULVDS_25_DT | | | N/R | N/R | N/R |

*Table 12:* **Summary of Voltage Supply Requirements for All Input and Output Standards *(Continued)***

| I/O Standard | $V_{CCO}$ Output | $V_{CCO}$ Input | $V_{REF}$ Input | Termination Type Output | Termination Type Input |
|---|---|---|---|---|---|
| HSTL_III_18 | 1.8 | Note (3) | 1.1 | N/R | N/R |
| HSTL_IV_18 | | | 1.1 | N/R | N/R |
| HSTL_I_18 | | | 0.9 | N/R | N/R |
| HSTL_II_18 | | | 0.9 | N/R | N/R |
| SSTL18_I | | | 0.9 | N/R | N/R |
| SSTL18_II | | | 0.9 | N/R | N/R |
| LVCMOS18 | | 1.8 | N/R | N/R | N/R |
| LVDCI_18 | | | N/R | Series | N/R |
| LVDCI_DV2_18 | | | N/R | Series | N/R |
| HSTL_III_DCI_18 | | | 1.1 | N/R | Single |
| HSTL_IV_DCI_18 | | | 1.1 | Single | Single |
| HSTL_I_DCI_18 | | | 0.9 | N/R | Split |
| HSTL_II_DCI_18 | | | 0.9 | Split | Split |
| SSTL18_I_DCI | | | 0.9 | N/R | Split |
| SSTL18_II_DCI | | | 0.9 | Split | Split |
| HSTL_III | 1.5 | Note (3) | 0.9 | N/R | N/R |
| HSTL_IV | | | 0.9 | N/R | N/R |
| HSTL_I | | | 0.75 | N/R | N/R |
| HSTL_II | | | 0.75 | N/R | N/R |
| LVCMOS15 | | 1.5 | N/R | N/R | N/R |
| LVDCI_15 | | | N/R | Series | N/R |
| LVDCI_DV2_15 | | | N/R | Series | N/R |
| GTLP_DCI | | | 1 | Single | Single |
| HSTL_III_DCI | | | 0.9 | N/R | Single |
| HSTL_IV_DCI | | | 0.9 | Single | Single |
| HSTL_I_DCI | | | 0.75 | N/R | Split |
| HSTL_II_DCI | | | 0.75 | Split | Split |
| GTL_DCI | 1.2 | 1.2 | 0.8 | Single | Single |
| GTLP | N/R | Note (3) | 1 | N/R | N/R |
| GTL | | | 0.8 | N/R | N/R |

**Notes:**
1. See application note **XAPP659** for more detailed information.
2. See application note **XAPP653** for more detailed information.
3. Pin voltage must not exceed $V_{CCO}$.
4. N/R = no requirement.

### *Digitally Controlled Impedance (DCI)*

Today's chip output signals with fast edge rates require termination to prevent reflections and maintain signal integrity. High pin count packages (especially ball grid arrays) can not accommodate external termination resistors.

Virtex-II Pro XCITE DCI provides controlled impedance drivers and on-chip termination for single-ended and differential I/Os. This eliminates the need for external resistors and improves signal integrity. The DCI feature can be used on any IOB by selecting one of the DCI I/O standards.

When applied to inputs, DCI provides input parallel termination. When applied to outputs, DCI provides controlled impedance drivers (series termination) or output parallel termination.

DCI operates independently on each I/O bank. When a DCI I/O standard is used in a particular I/O bank, external reference resistors must be connected to two dual-function pins on the bank. These resistors, voltage reference of N transistor (VRN) and the voltage reference of P transistor (VRP) are shown in Figure 26.

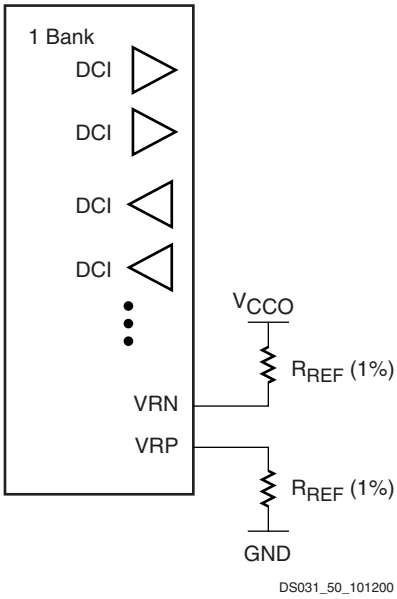


*Figure 26:* **DCI in a Virtex-II Pro Bank**

When used with a terminated I/O standard, the value of the resistors are specified by the standard (typically 50Ω). When used with a controlled impedance driver, the resistors set the output impedance of the driver within the specified range (20Ω to 100Ω). For all series and parallel terminations listed in Table 13 and Table 14, the reference resistors must have the same value for any given bank. One percent resistors are recommended.

The DCI system adjusts the I/O impedance to match the two external reference resistors, or half of the reference resistors, and compensates for impedance changes due to voltage and/or temperature fluctuations. The adjustment is done by turning parallel transistors in the IOB on or off.

#### Controlled Impedance Drivers (Series Termination)

DCI can be used to provide a buffer with a controlled output impedance. It is desirable for this output impedance to match the transmission line impedance ($Z_0$). Virtex-II Pro input buffers also support LVDCI and LVDCI_DV2.

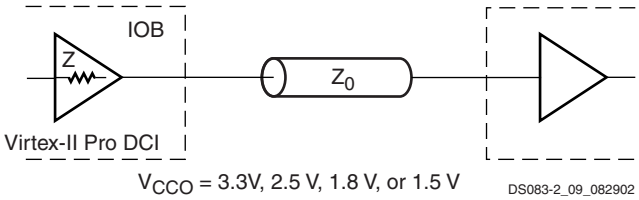


*Figure 27:* **Internal Series Termination**

*Table 13:* **SelectIO-Ultra Controlled Impedance Buffers**

| $V_{CCO}$ | DCI | DCI Half Impedance |
|---|---|---|
| 3.3V | LVDCI_33 | N/A |
| 2.5V | LVDCI_25 | LVDCI_DV2_25 |
| 1.8V | LVDCI_18 | LVDCI_DV2_18 |
| 1.5V | LVDCI_15 | LVDCI_DV2_15 |

#### Controlled Impedance Terminations (Parallel)

DCI also provides on-chip termination for SSTL2, SSTL18, HSTL (Class I, II, III, or IV), LVDS_25, LVDSEXT_25, and GTL/GTLP receivers or transmitters on bidirectional lines. Table 14 and Table 15 list the on-chip parallel terminations available in Virtex-II Pro devices. $V_{CCO}$ must be set according to Table 10. There is a $V_{CCO}$ requirement for GTL_DCI and GTLP_DCI, due to the on-chip termination resistor.

*Table 14:* **SelectIO-Ultra Buffers With On-Chip Parallel Termination**

| I/O Standard Description | IOSTANDARD Attribute | |
|---|---|---|
| | External Termination | On-Chip Termination |
| SSTL Class I, 2.5V | SSTL2_I | SSTL2_I_DCI(1) |
| SSTL Class II, 2.5V | SSTL2_II | SSTL2_II_DCI(1) |
| SSTL Class I, 1.8V | SSTL18_I | SSTL18_I_DCI |
| SSTL Class II, 1.8V | SSTL18_II | SSTL18_II_DCI |
| HSTL Class I | HSTL_I | HSTL_I_DCI |
| HSTL Class I, 1.8V | HSTL_I_18 | HSTL_I_DCI_18 |
| HSTL Class II | HSTL_II | HSTL_II_DCI |
| HSTL Class II, 1.8V | HSTL_II_18 | HSTL_II_DCI_18 |
| HSTL Class III | HSTL_III | HSTL_III_DCI |
| HSTL Class III, 1.8V | HSTL_III_18 | HSTL_III_DCI_18 |
| HSTL Class IV | HSTL_IV | HSTL_IV_DCI |
| HSTL Class IV, 1.8V | HSTL_IV_18 | HSTL_IV_DCI_18 |
| GTL | GTL | GTL_DCI |
| GTL Plus | GTLP | GTLP_DCI |

**Notes:**
1. SSTL compatible.

*Table 15:* **SelectIO-Ultra Differential Buffers With On-Chip Termination**

| I/O Standard Description | IOSTANDARD Attribute | |
|---|---|---|
| | External Termination | On-Chip Termination |
| LVDS 2.5V | LVDS_25 | LVDS_25_DCI |
| LVDS Extended 2.5V | LVDSEXT_25 | LVDSEXT_25_DCI |

Figure 28 provides examples illustrating the use of the HSTL_I_DCI, HSTL_II_DCI, HSTL_III_DCI, and HSTL_IV_DCI I/O standards. For a complete list, see the ***Virtex-II Pro Platform FPGA User Guide***.

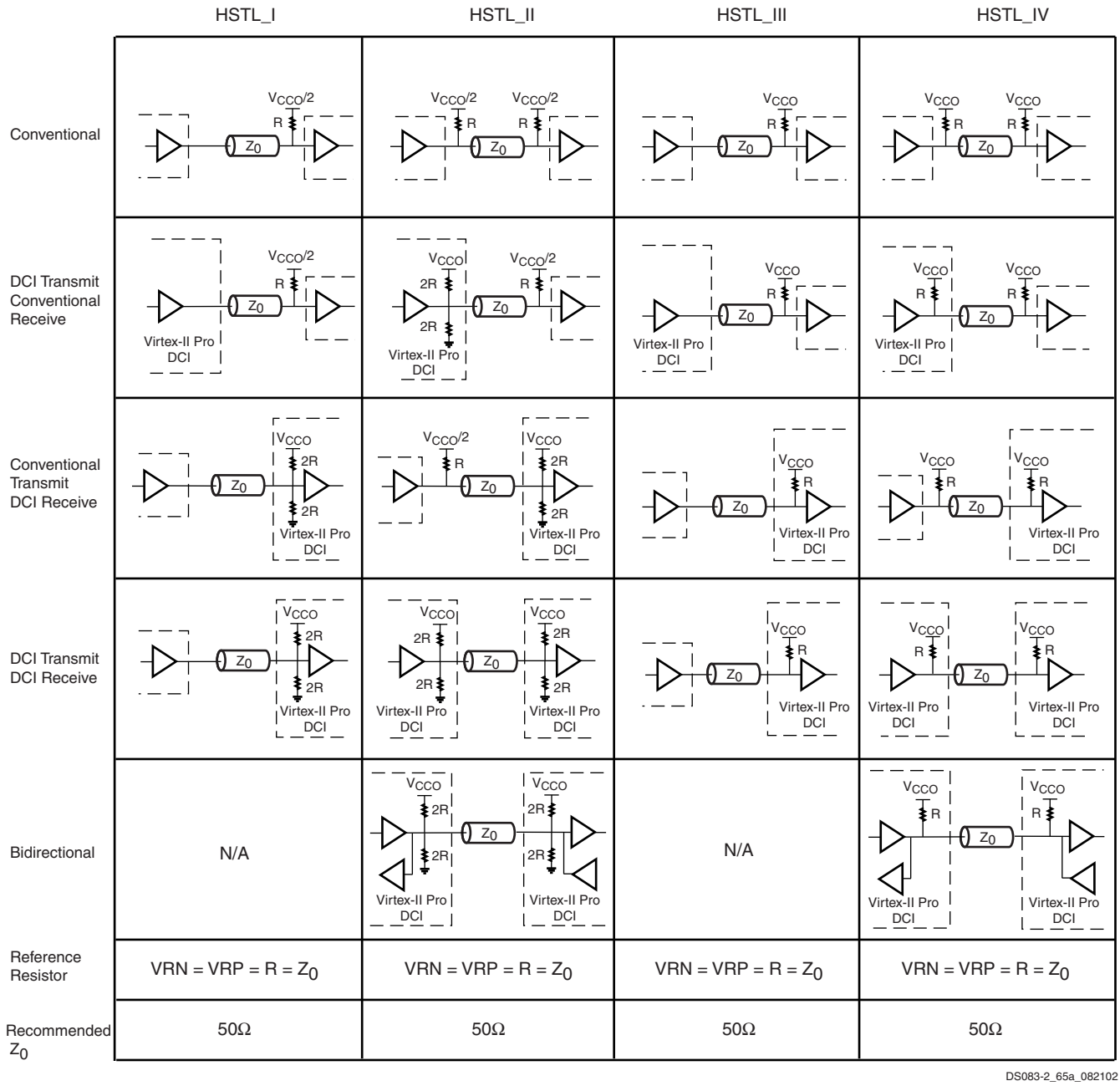


*Figure 28:* **HSTL DCI Usage Examples**

Figure 29 provides examples illustrating the use of the SSTL2_I_DCI, SSTL2_II_DCI, SSTL18_I_DCI, and SSTL18_II_DCI I/O standards. For a complete list, see the ***Virtex-II Pro Platform FPGA User Guide***.

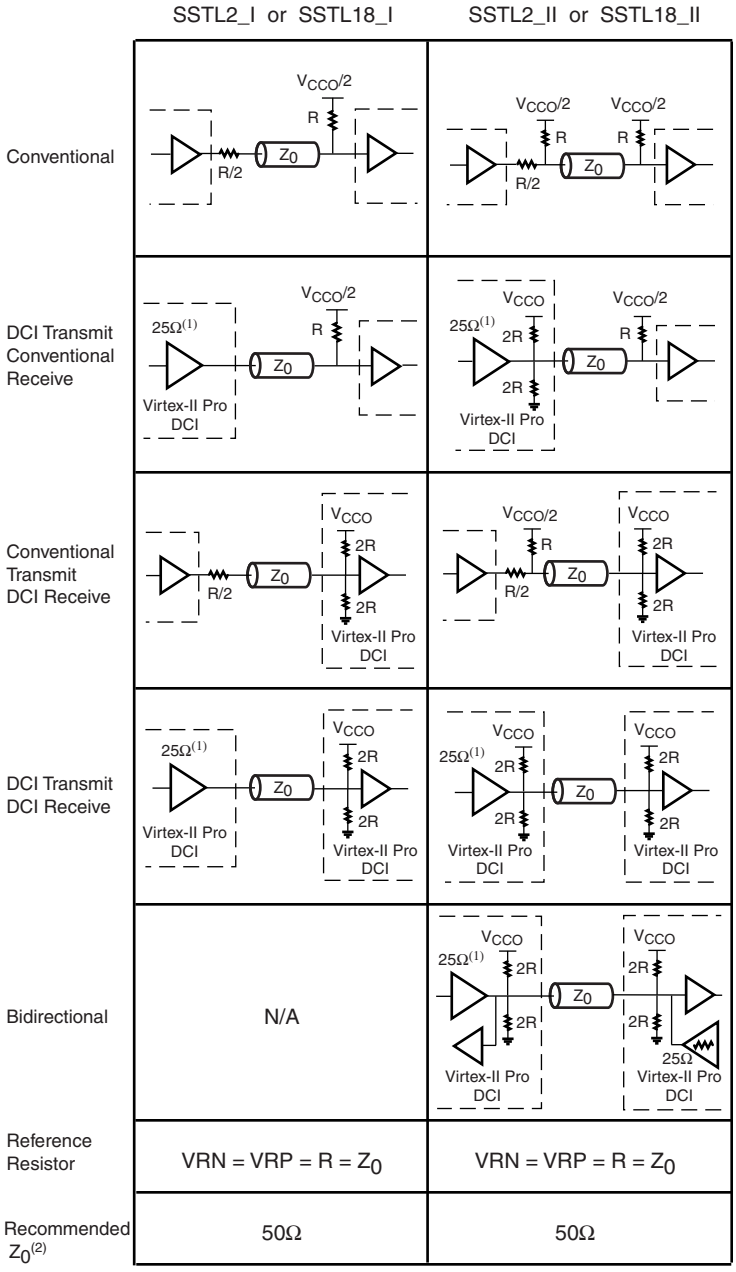


**Notes:**
1. The SSTL-compatible 25Ω series resistor is accounted for in the DCI buffer, and it is not DCI controlled.
2. $Z_0$ is the recommended PCB trace impedance.

*Figure 29:* **SSTL DCI Usage Examples**

Figure 30 provides examples illustrating the use of the LVDS_25_DCI and LVDSEXT_25_DCI I/O standards. For a complete list, see the ***Virtex-II Pro Platform FPGA User Guide***.

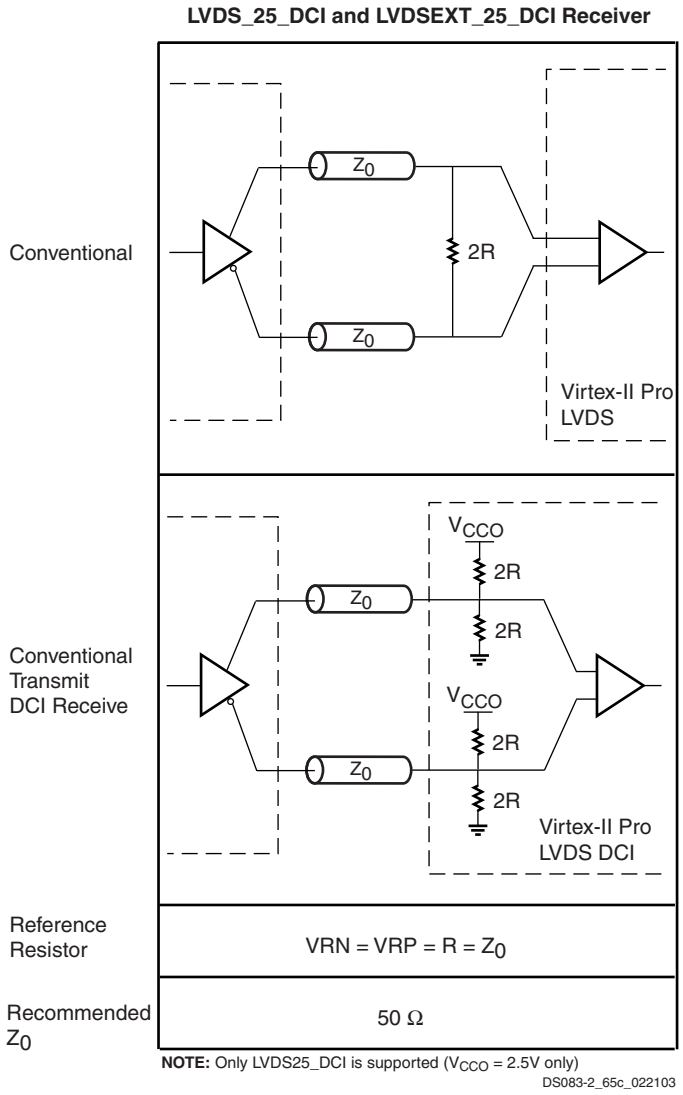


*Figure 30:* **LVDS DCI Usage Examples**

### *On-Chip Differential Termination*

Virtex-II Pro provides a true 100Ω differential termination (DT) across the input differential receiver terminals. The LVDS_25_DT, LVDSEXT_25_DT, LDT_25_DT, and ULVDS_25_DT standards support on-chip differential termination.

The on-chip input differential termination in Virtex-II Pro provides major advantages over the external resistor or the DCI termination solution:

- Eliminates the stub at the receiver completely and therefore greatly improve signal integrity
- Consumes less power than DCI termination
- Supports LDT (not supported by DCI termination)
- Frees up VRP/VRN pins

Figure 31 provides examples illustrating the use of the LVDS_25_DT, LVDSEXT_25_DT, LDT_25_DT, and ULVDS_25_DT I/O standards. For further details, refer to **Solution Record 17244**. Also see the ***Virtex-II Pro Platform FPGA User Guide*** for more design information.

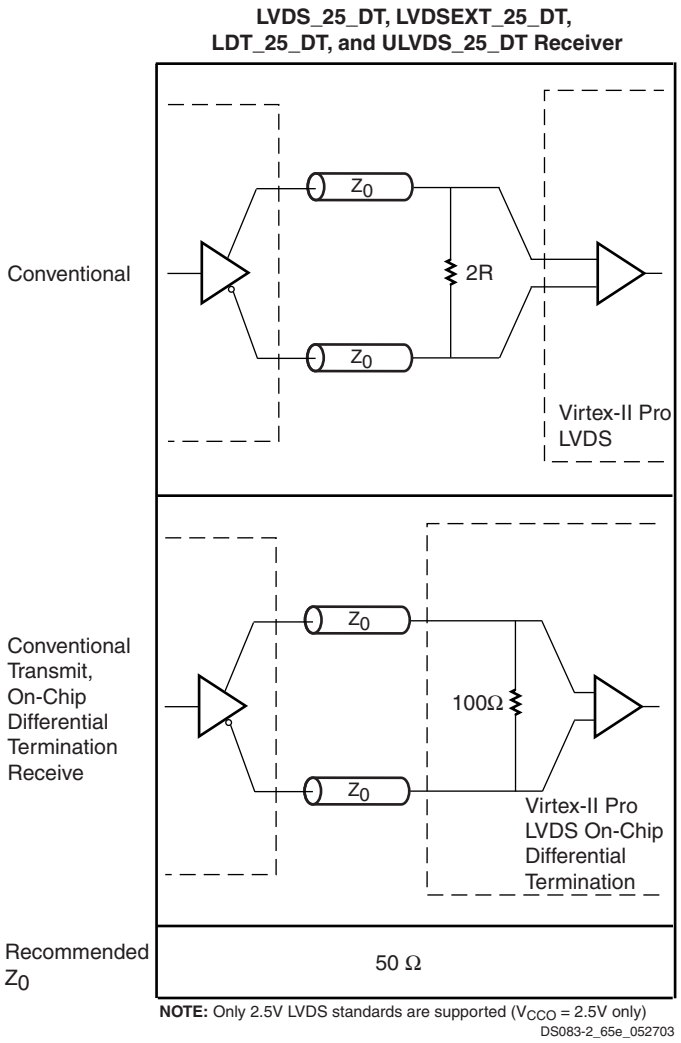


*Figure 31:* **LVDS Differential Termination Usage Examples**

## Configurable Logic Blocks (CLBs)

The Virtex-II Pro configurable logic blocks (CLB) are organized in an array and are used to build combinatorial and synchronous logic designs. Each CLB element is tied to a switch matrix to access the general routing matrix, as shown in Figure 32. A CLB element comprises 4 similar slices, with fast local feedback within the CLB. The four slices are split in two columns of two slices with two independent carry logic chains and one common shift chain.

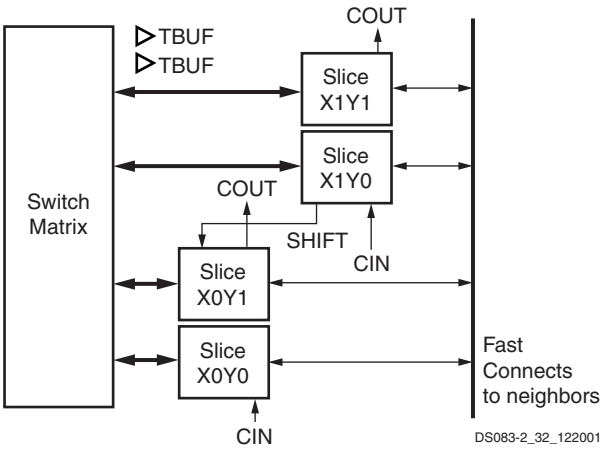


*Figure 32:* **Virtex-II Pro CLB Element**

### *Slice Description*

Each slice includes two 4-input function generators, carry logic, arithmetic logic gates, wide function multiplexers and two storage elements. As shown in Figure 33, each 4-input function generator is programmable as a 4-input LUT, 16 bits of distributed SelectRAM+ memory, or a 16-bit variable-tap shift register element.

The output from the function generator in each slice drives both the slice output and the D input of the storage element. Figure 34 shows a more detailed view of a single slice.

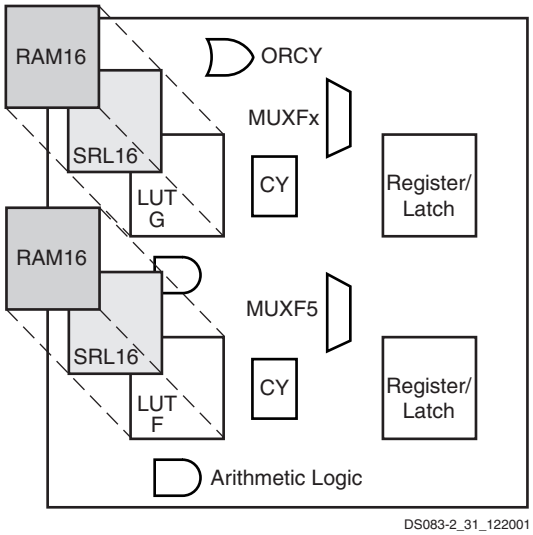


*Figure 33:* **Virtex-II Pro Slice Configuration**

### *Configurations*

#### Look-Up Table

Virtex-II Pro function generators are implemented as 4-input look-up tables (LUTs). Four independent inputs are provided to each of the two function generators in a slice (F and G). These function generators are each capable of implementing any arbitrarily defined boolean function of four inputs. The propagation delay is therefore independent of the function implemented. Signals from the function generators can exit the slice (X or Y output), can input the XOR dedicated gate (see arithmetic logic), or input the carry-logic multiplexer (see fast look-ahead carry logic), or feed the D input of the storage element, or go to the MUXF5 (not shown in Figure 34).

In addition to the basic LUTs, the Virtex-II Pro slice contains logic (MUXF5 and MUXFX multiplexers) that combines function generators to provide any function of five, six, seven, or eight inputs. The MUXFX is either MUXF6, MUXF7, or MUXF8 according to the slice considered in the CLB. Selected functions up to nine inputs (MUXF5 multiplexer) can be implemented in one slice. The MUXFX can also be a MUXF6, MUXF7, or MUXF8 multiplexer to map any function of six, seven, or eight inputs and selected wide logic functions.

#### Register/Latch

The storage elements in a Virtex-II Pro slice can be configured either as edge-triggered D-type flip-flops or as level-sensitive latches. The D input can be directly driven by the X or Y output via the DX or DY input, or by the slice inputs bypassing the function generators via the BX or BY input. The clock enable signal (CE) is active High by default. If left unconnected, the clock enable for that storage element defaults to the active state.

In addition to clock (CK) and clock enable (CE) signals, each slice has set and reset signals (SR and BY slice inputs). SR forces the storage element into the state specified by the attribute SRHIGH or SRLOW. SRHIGH forces a logic 1 when SR is asserted. SRLOW forces a logic 0. When SR is used, an optional second input (BY) forces the storage element into the opposite state via the REV pin. The reset condition is predominant over the set condition. (See Figure 35.)

The initial state after configuration or global initial state is defined by a separate INIT0 and INIT1 attribute. By default, setting the SRLOW attribute sets INIT0, and setting the SRHIGH attribute sets INIT1. For each slice, set and reset can be set to be synchronous or asynchronous. Virtex-II Pro devices also have the ability to set INIT0 and INIT1 independent of SRHIGH and SRLOW.

The control signals clock (CLK), clock enable (CE) and set/reset (SR) are common to both storage elements in one slice. All of the control signals have independent polarity. Any inverter placed on a control input is automatically absorbed.

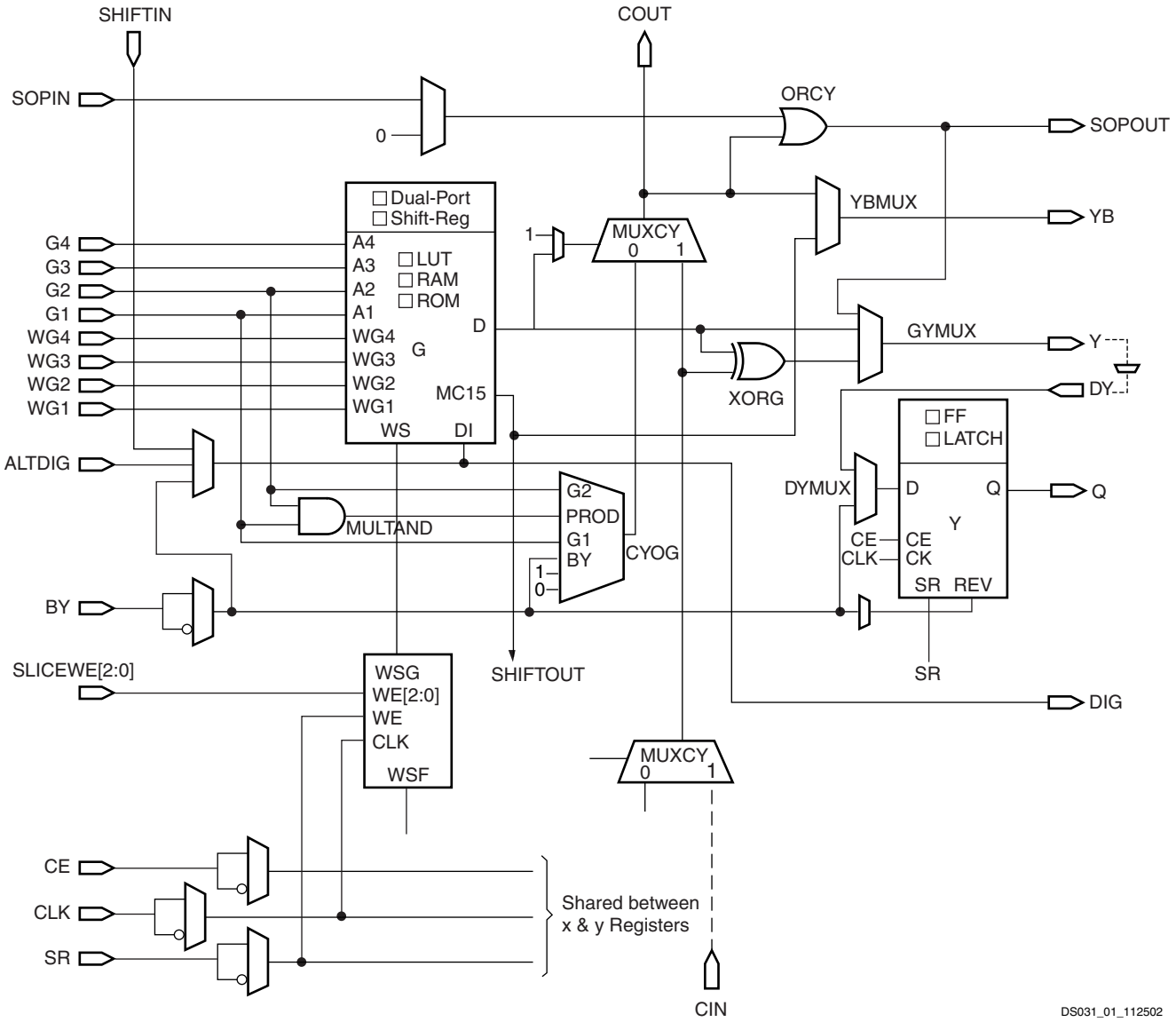


*Figure 34:* **Virtex-II Pro Slice (Top Half)**

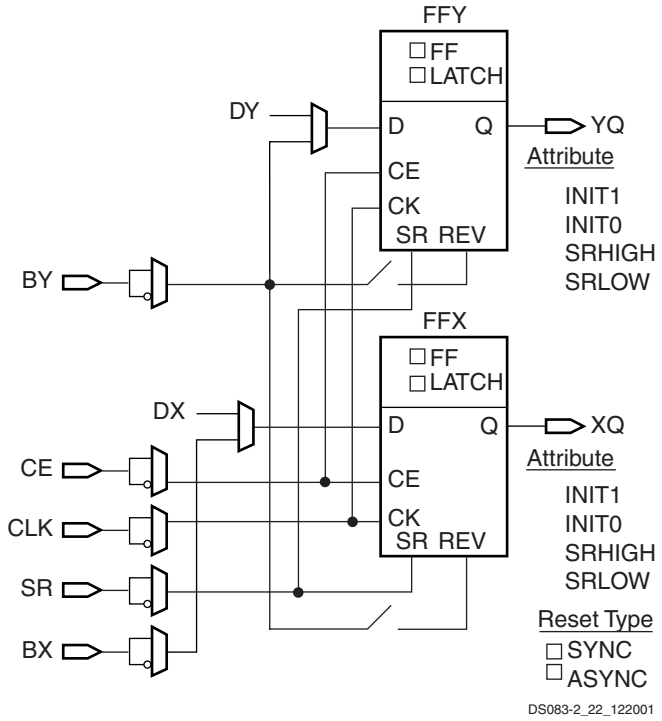


*Figure 35:* **Register / Latch Configuration in a Slice**

The set and reset functionality of a register or a latch can be configured as follows:

- No set or reset
- Synchronous set
- Synchronous reset
- Synchronous set and reset
- Asynchronous set (preset)
- Asynchronous reset (clear)
- Asynchronous set and reset (preset and clear)

The synchronous reset has precedence over a set, and an asynchronous clear has precedence over a preset.

### Distributed SelectRAM+ Memory

Each function generator (LUT) can implement a 16 x 1-bit synchronous RAM resource called a distributed SelectRAM+ element. SelectRAM+ elements are configurable within a CLB to implement the following:

- Single-Port 16 x 8-bit RAM
- Single-Port 32 x 4-bit RAM
- Single-Port 64 x 2-bit RAM
- Single-Port 128 x 1-bit RAM
- Dual-Port 16 x 4-bit RAM
- Dual-Port 32 x 2-bit RAM
- Dual-Port 64 x 1-bit RAM

Distributed SelectRAM+ memory modules are synchronous (write) resources. The combinatorial read access time is extremely fast, while the synchronous write simplifies high-speed designs. A synchronous read can be implemented with a storage element in the same slice. The distributed SelectRAM+ memory and the storage element share the same clock input. A Write Enable (WE) input is active High, and is driven by the SR input.

Table 16 shows the number of LUTs (2 per slice) occupied by each distributed SelectRAM+ configuration.

*Table 16:* **Distributed SelectRAM+ Configurations**

| RAM | Number of LUTs |
|---|---|
| 16 x 1S | 1 |
| 16 x 1D | 2 |
| 32 x 1S | 2 |
| 32 x 1D | 4 |
| 64 x 1S | 4 |
| 64 x 1D | 8 |
| 128 x 1S | 8 |

**Notes:**
1. S = single-port configuration; D = dual-port configuration

For single-port configurations, distributed SelectRAM+ memory has one address port for synchronous writes and asynchronous reads.

For dual-port configurations, distributed SelectRAM+ memory has one port for synchronous writes and asynchronous reads and another port for asynchronous reads. The function generator (LUT) has separated read address inputs (A1, A2, A3, A4) and write address inputs (WG1/WF1, WG2/WF2, WG3/WF3, WG4/WF4).

In single-port mode, read and write addresses share the same address bus. In dual-port mode, one function generator (R/W port) is connected with shared read and write addresses. The second function generator has the A inputs (read) connected to the second read-only port address and the W inputs (write) shared with the first read/write port

Figure 36, Figure 37, and Figure 38 illustrate various example configurations.

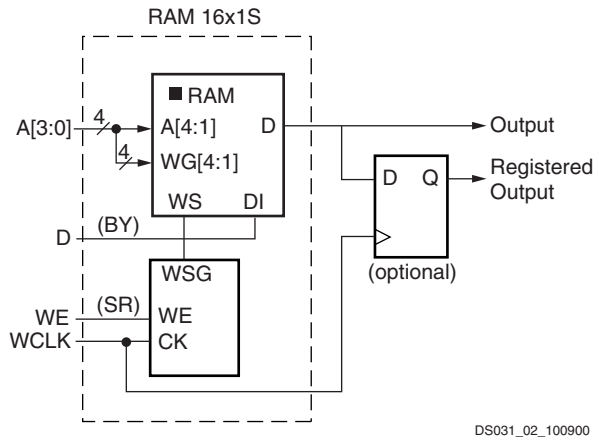


*Figure 36:* **Distributed SelectRAM+ (RAM16x1S)**

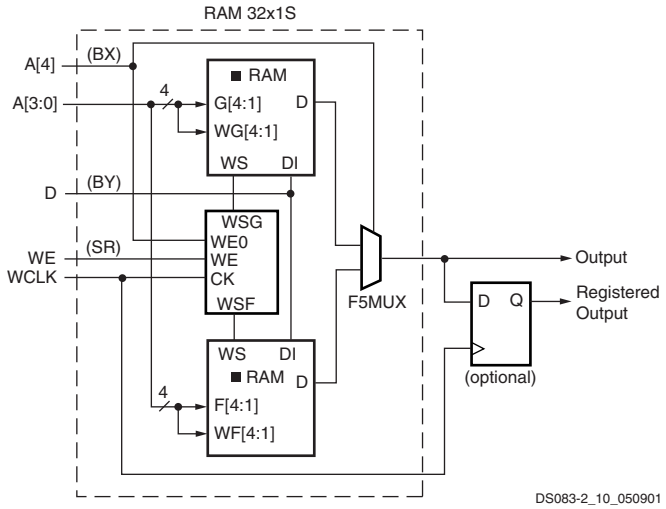


*Figure 37:* **Single-Port Distributed SelectRAM+ (RAM32x1S)**

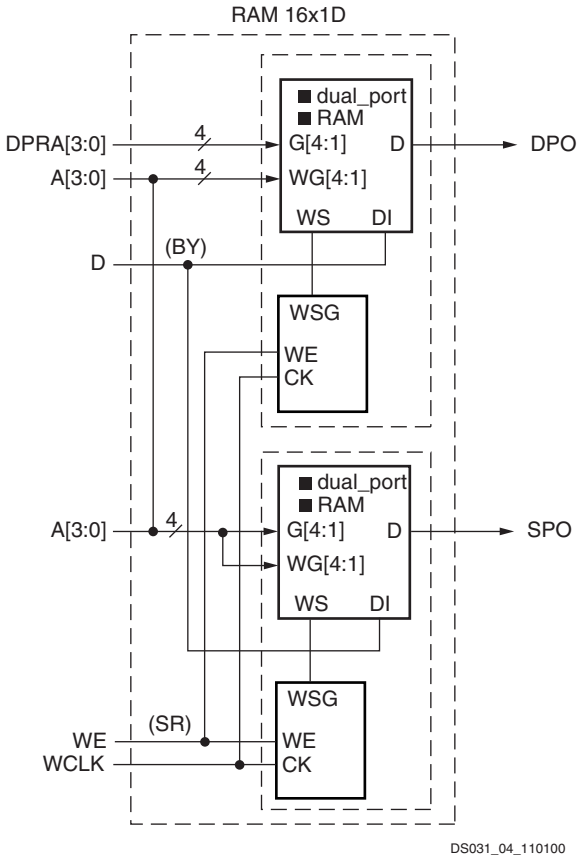


*Figure 38:* **Dual-Port Distributed SelectRAM+ (RAM16x1D)**

Similar to the RAM configuration, each function generator (LUT) can implement a 16 x 1-bit ROM. Five configurations are available: ROM16x1, ROM32x1, ROM64x1, ROM128x1, and ROM256x1. The ROM elements are cascadable to implement wider or/and deeper ROM. ROM contents are loaded at configuration. Table 17 shows the number of LUTs occupied by each configuration.

*Table 17:* **ROM Configuration**

| ROM | Number of LUTs |
|---|---|
| 16 x 1 | 1 |
| 32 x 1 | 2 |
| 64 x 1 | 4 |
| 128 x 1 | 8 (1 CLB) |
| 256 x 1 | 16 (2 CLBs) |

### Shift Registers

Each function generator can also be configured as a 16-bit shift register. The write operation is synchronous with a clock input (CLK) and an optional clock enable, as shown in Figure 39. A dynamic read access is performed through the 4-bit address bus, A[3:0]. The configurable 16-bit shift register cannot be set or reset. The read is asynchronous; however, the storage element or flip-flop is available to implement a synchronous read. Any of the 16 bits can be read out asynchronously by varying the address. The storage element should always be used with a constant address. For example, when building an 8-bit shift register and configuring the addresses to point to the 7th bit, the 8th bit can be the flip-flop. The overall system performance is improved by using the superior clock-to-out of the flip-flops.

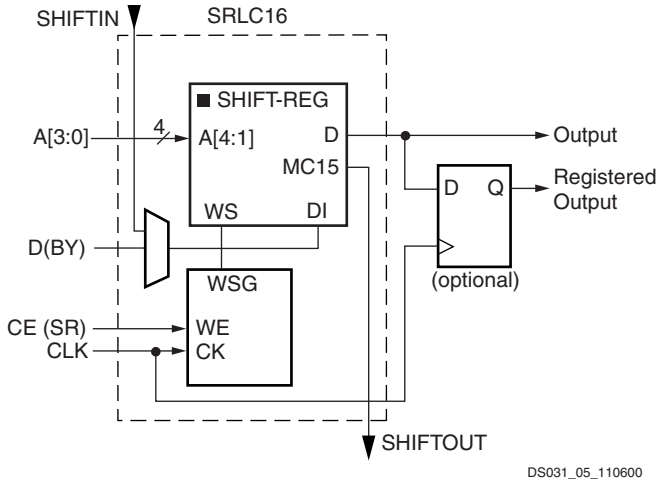


*Figure 39:* **Shift Register Configurations**

An additional dedicated connection between shift registers allows connecting the last bit of one shift register to the first bit of the next, without using the ordinary LUT output. (See Figure 40.) Longer shift registers can be built with dynamic access to any bit in the chain. The shift register chaining and the MUXF5, MUXF6, and MUXF7 multiplexers allow up to a 128-bit shift register with addressable access to be implemented in one CLB.

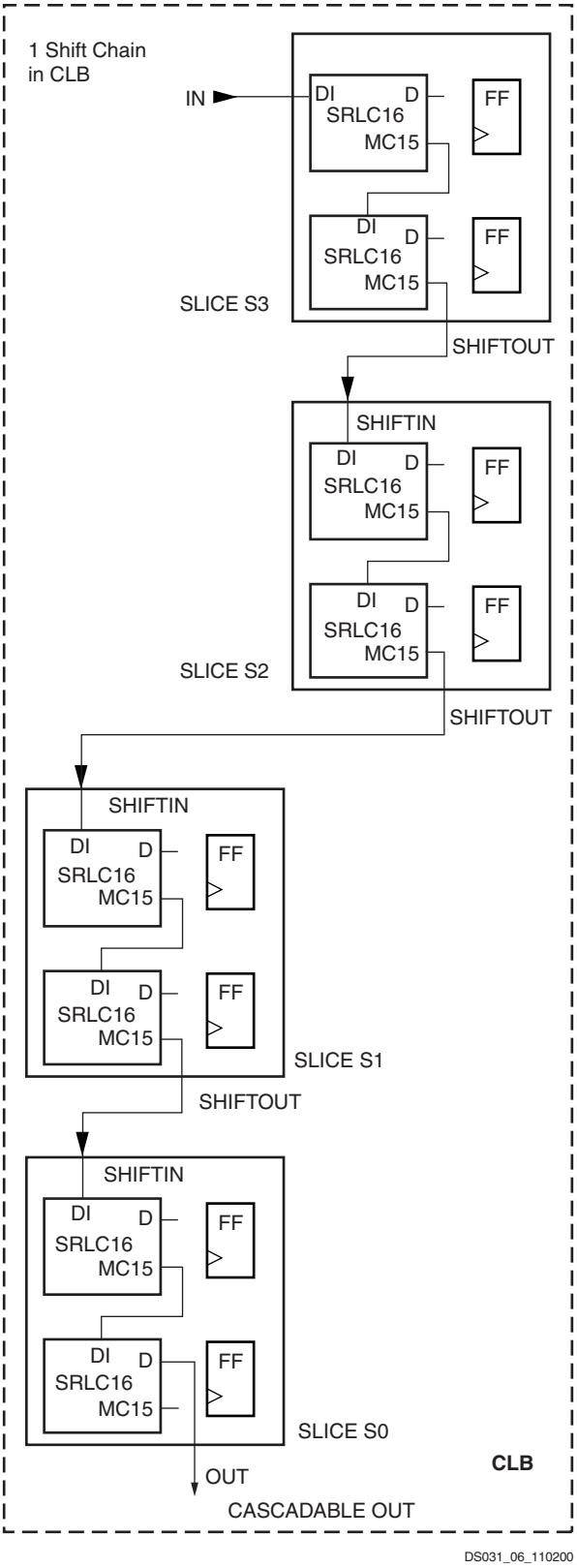


*Figure 40:* **Cascadable Shift Register**

### Multiplexers

Virtex-II Pro function generators and associated multiplexers can implement the following:

- 4:1 multiplexer in one slice
- 8:1 multiplexer in two slices
- 16:1 multiplexer in one CLB element (4 slices)
- 32:1 multiplexer in two CLB elements (8 slices)

Each Virtex-II Pro slice has one MUXF5 multiplexer and one MUXFX multiplexer. The MUXFX multiplexer implements the MUXF6, MUXF7, or MUXF8, as shown in Figure 41. Each CLB element has two MUXF6 multiplexers, one MUXF7 multiplexer and one MUXF8 multiplexer. Examples of multiplexers are shown in the *Virtex-II Pro Platform FPGA User Guide*. Any LUT can implement a 2:1 multiplexer.

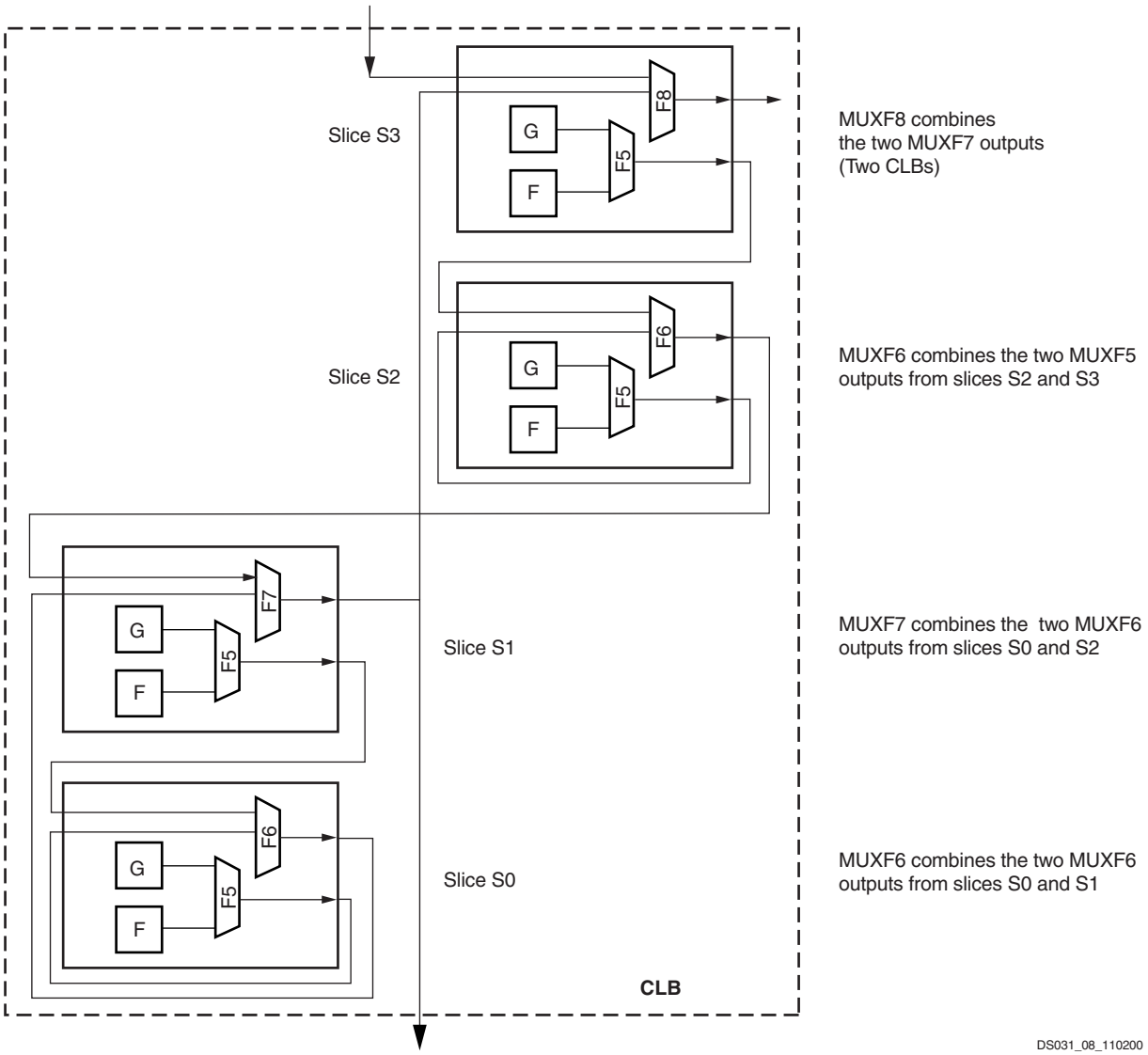


*Figure 41:* **MUXF5 and MUXFX multiplexers**

### Fast Lookahead Carry Logic

Dedicated carry logic provides fast arithmetic addition and subtraction. The Virtex-II Pro CLB has two separate carry chains, as shown in the Figure 42.

The height of the carry chains is two bits per slice. The carry chain in the Virtex-II Pro device is running upward. The dedicated carry path and carry multiplexer (MUXCY) can also be used to cascade function generators for implementing wide logic functions.

### Arithmetic Logic

The arithmetic logic includes an XOR gate that allows a 2-bit full adder to be implemented within a slice. In addition, a dedicated AND (MULT_AND) gate (shown in Figure 34) improves the efficiency of multiplier implementation.

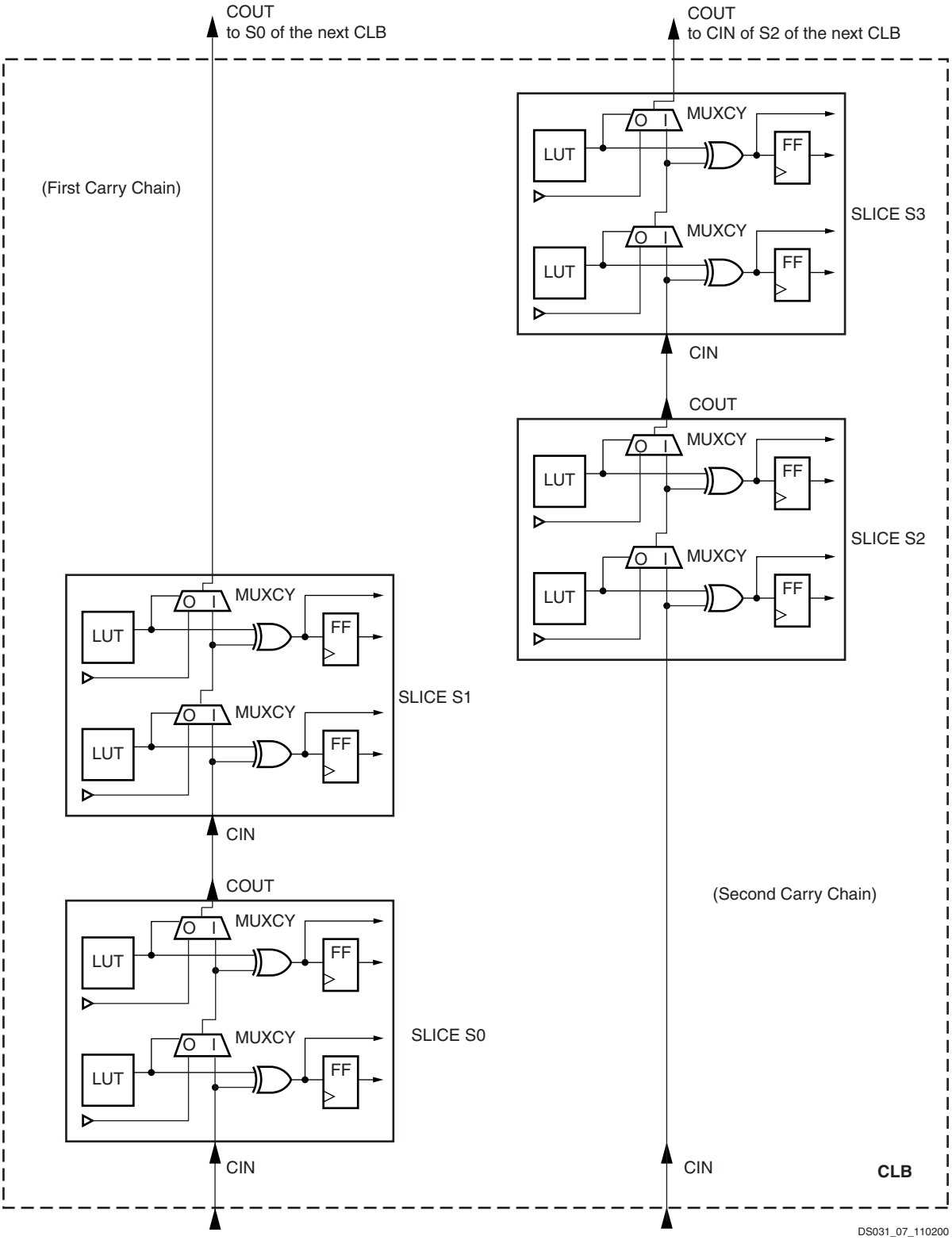


*Figure 42:* **Fast Carry Logic Path**

### Sum of Products

Each Virtex-II Pro slice has a dedicated OR gate named ORCY, ORing together outputs from the slices carryout and the ORCY from an adjacent slice. The ORCY gate with the dedicated Sum of Products (SOP) chain are designed for implementing large, flexible SOP chains. One input of each ORCY is connected through the fast SOP chain to the output of the previous ORCY in the same slice row. The second input is connected to the output of the top MUXCY in the same slice, as shown in Figure 43.

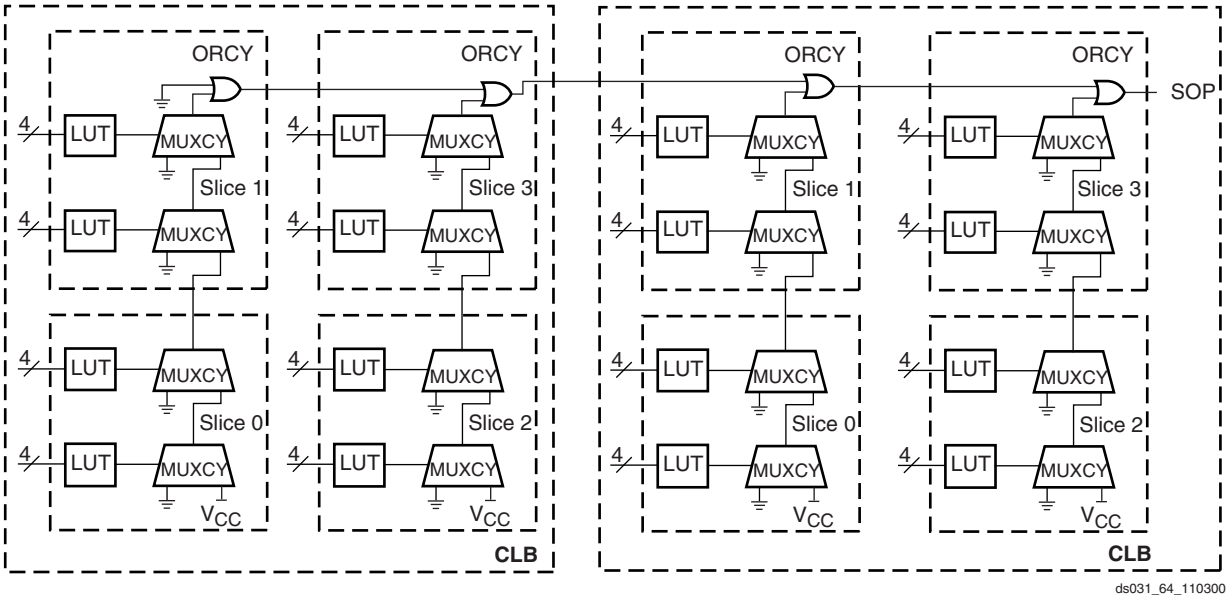


*Figure 43:* **Horizontal Cascade Chain**

LUTs and MUXCYs can implement large AND gates or other combinatorial logic functions. Figure 44 illustrates LUT and MUXCY resources configured as a 16-input AND gate.

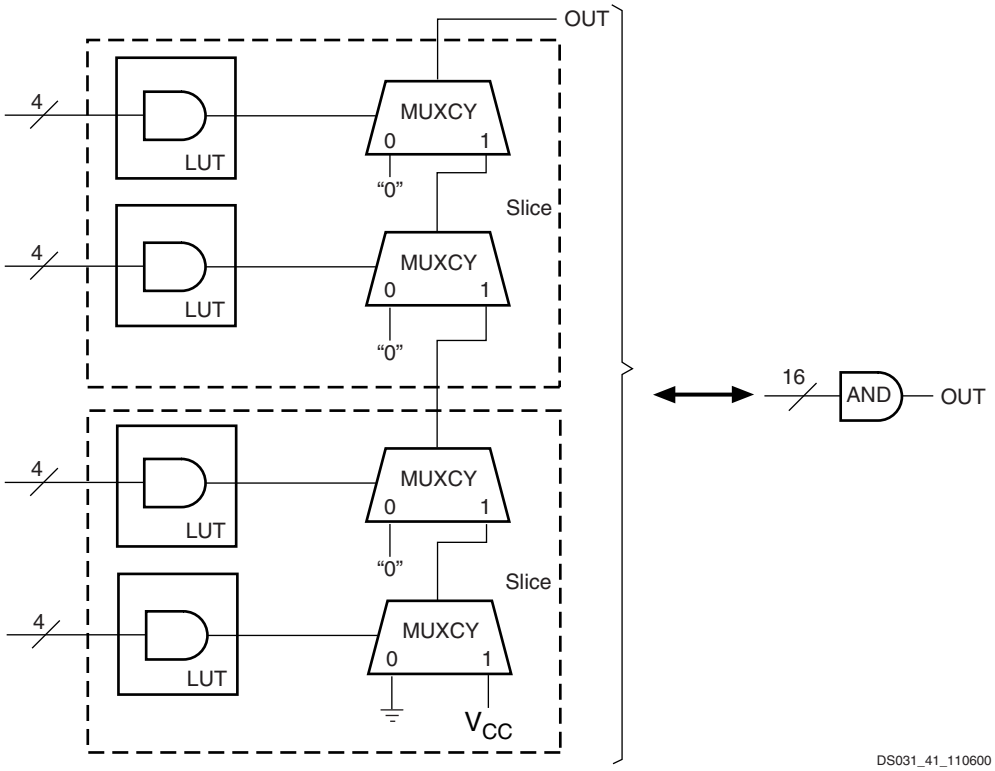


*Figure 44:* **Wide-Input AND Gate (16 Inputs)**

### *3-State Buffers*

#### Introduction

Each Virtex-II Pro CLB contains two 3-state drivers (TBUFs) that can drive on-chip buses. Each 3-state buffer has its own 3-state control pin and its own input pin.

Each of the four slices have access to the two 3-state buffers through the switch matrix, as shown in Figure 45. TBUFs in neighboring CLBs can access slice outputs by direct connects. The outputs of the 3-state buffers drive horizontal routing resources used to implement 3-state buses.

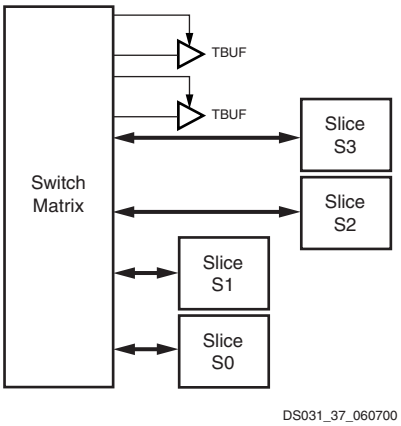


*Figure 45:* **Virtex-II Pro 3-State Buffers**

The 3-state buffer logic is implemented using AND-OR logic rather than 3-state drivers, so that timing is more predictable and less load dependant especially with larger devices.

#### Locations / Organization

Four horizontal routing resources per CLB are provided for on-chip 3-state buses. Each 3-state buffer has access alternately to two horizontal lines, which can be partitioned as shown in Figure 46. The switch matrices corresponding to SelectRAM+ memory and multiplier or I/O blocks are skipped.

#### Number of 3-State Buffers

Table 18 shows the number of 3-state buffers available in each Virtex-II Pro device. The number of 3-state buffers is twice the number of CLB elements.

*Table 18:* **Virtex-II Pro 3-State Buffers**

| Device | 3-State Buffers per Row | Total Number of 3-State Buffers |
|---|---|---|
| XC2VP2 | 44 | 704 |
| XC2VP4 | 44 | 1,504 |
| XC2VP7 | 68 | 2,464 |
| XC2VP20 | 92 | 4,640 |
| XC2VPX20 | 92 | 4,896 |
| XC2VP30 | 92 | 6,848 |
| XC2VP40 | 116 | 9,696 |
| XC2VP50 | 140 | 11,808 |
| XC2VP70 | 164 | 16,544 |
| XC2VPX70 | 164 | 16,544 |
| XC2VP100 | 188 | 22,048 |

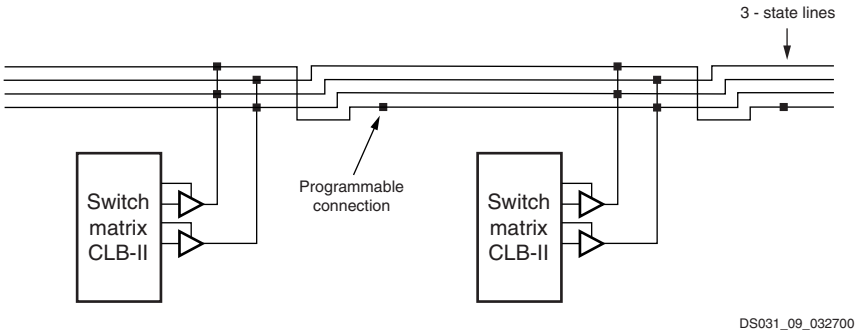


*Figure 46:* **3-State Buffer Connection to Horizontal Lines**

### CLB/Slice Configurations

Table 19 summarizes the logic resources in one CLB. All of the CLBs are identical and each CLB or slice can be implemented in one of the configurations listed. Table 20 shows the available resources in all CLBs.

*Table 19:* **Logic Resources in One CLB**

| Slices | LUTs | Flip-Flops | MULT_ANDs | Arithmetic & Carry-Chains | SOP Chains | Distributed SelectRAM+ | Shift Registers | TBUF |
|---|---|---|---|---|---|---|---|---|
| 4 | 8 | 8 | 8 | 2 | 2 | 128 bits | 128 bits | 2 |

*Table 20:* **Virtex-II Pro Logic Resources Available in All CLBs**

| Device | CLB Array: Row x Column | Number of Slices | Number of LUTs | Max Distributed SelectRAM or Shift Register (bits) | Number of Flip-Flops | Number of Carry-Chains (1) | Number of SOP Chains (1) |
|---|---|---|---|---|---|---|---|
| XC2VP2 | 16 x 22 | 1,408 | 2,816 | 45,056 | 2,816 | 44 | 32 |
| XC2VP4 | 40 x 22 | 3,008 | 6,016 | 96,256 | 6,016 | 44 | 80 |
| XC2VP7 | 40 x 34 | 4,928 | 9,856 | 157,696 | 9,856 | 68 | 80 |
| XC2VP20 | 56 x 46 | 9,280 | 18,560 | 296,960 | 18,560 | 92 | 112 |
| XC2VPX20 | 56 x 46 | 9,792 | 19,584 | 313,334 | 18,560 | 92 | 112 |
| XC2VP30 | 80 x 46 | 13,696 | 27,392 | 438,272 | 27,392 | 92 | 160 |
| XC2VP40 | 88 x 58 | 19,392 | 38,784 | 620,544 | 38,784 | 116 | 176 |
| XC2VP50 | 88 x 70 | 23,616 | 47,232 | 755,712 | 47,232 | 140 | 176 |
| XC2VP70 | 104 x 82 | 33,088 | 66,176 | 1,058,816 | 66,176 | 164 | 208 |
| XC2VPX70 | 104 x 82 | 33,088 | 66,176 | 1,058,816 | 66,176 | 164 | 208 |
| XC2VP100 | 120 x 94 | 44,096 | 88,192 | 1,411,072 | 88,192 | 188 | 240 |

**Notes:**
1. The carry-chains and SOP chains can be split or cascaded.

## 18 Kb Block SelectRAM+ Resources

### Introduction

Virtex-II Pro devices incorporate large amounts of 18 Kb block SelectRAM+ resources. These complement the distributed SelectRAM+ resources that provide shallow RAM structures implemented in CLBs. Each Virtex-II Pro block SelectRAM+ resource is an 18 Kb true dual-port RAM with two independently clocked and independently controlled synchronous ports that access a common storage area. Both ports are functionally identical. CLK, EN, WE, and SSR polarities are defined through configuration.

Each port has the following types of inputs: Clock and Clock Enable, Write Enable, Set/Reset, and Address, as well as separate Data/parity data inputs (for write) and Data/parity data outputs (for read).

Operation is synchronous; the block SelectRAM+ behaves like a register. Control, address and data inputs must (and need only) be valid during the set-up time window prior to a rising (or falling, a configuration option) clock edge. Data outputs change as a result of the same clock edge.

### Configuration

Virtex-II Pro block SelectRAM+ supports various configurations, including single- and dual-port RAM and various data/address aspect ratios. Supported memory configurations for single- and dual-port modes are shown in Table 21.

*Table 21:* **Dual- and Single-Port Configurations**

| | |
|---|---|
| 16K x 1 bit | 2K x 9 bits |
| 8K x 2 bits | 1K x 18 bits |
| 4K x 4 bits | 512 x 36 bits |

#### Single-Port Configuration

As a single-port RAM, the block SelectRAM+ has access to the 18 Kb memory locations in any of the 2K x 9-bit, 1K x 18-bit, or 512 x 36-bit configurations and to 16 Kb memory locations in any of the 16K x 1-bit, 8K x 2-bit, or 4K x 4-bit configurations. The advantage of the 9-bit, 18-bit and 36-bit widths is the ability to store a parity bit for each eight bits. Parity bits must be generated or checked exter-

nally in user logic. In such cases, the width is viewed as 8 + 1, 16 + 2, or 32 + 4. These extra parity bits are stored and behave exactly as the other bits, including the timing parameters. Video applications can use the 9-bit ratio of Virtex-II Pro block SelectRAM+ memory to advantage.

Each block SelectRAM+ cell is a fully synchronous memory as illustrated in Figure 47. Input data bus and output data bus widths are identical.

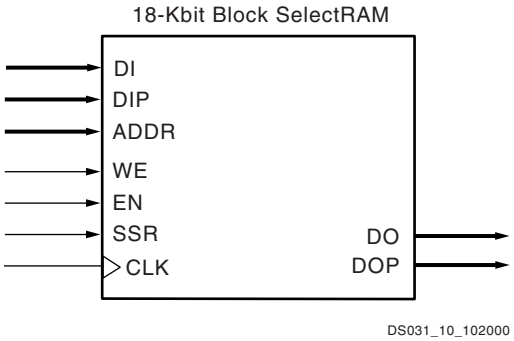


*Figure 47:* **18 Kb Block SelectRAM+ Memory in Single-Port Mode**

### Dual-Port Configuration

As a dual-port RAM, each port of block SelectRAM+ has access to a common 18 Kb memory resource. These are fully synchronous ports with independent control signals for each port. The data widths of the two ports can be configured independently, providing built-in bus-width conversion.

Table 22 illustrates the different configurations available on ports A and B.

If both ports are configured in either 2K x 9-bit, 1K x 18-bit, or 512 x 36-bit configurations, the 18 Kb block is accessible from port A or B. If both ports are configured in either 16K x 1-bit, 8K x 2-bit. or 4K x 4-bit configurations, the 16 K-bit block is accessible from Port A or Port B. All other configurations result in one port having access to an 18 Kb memory block and the other port having access to a 16 K-bit subset of the memory block equal to 16 Kbs.

*Table 22:* **Dual-Port Mode Configurations**

| | | | | | | |
|---|---|---|---|---|---|---|
| Port A | 16K x 1 | 16K x 1 | 16K x 1 | 16K x 1 | 16K x 1 | 16K x 1 |
| Port B | 16K x 1 | 8K x 2 | 4K x 4 | 2K x 9 | 1K x 18 | 512 x 36 |
| Port A | 8K x 2 | 8K x 2 | 8K x 2 | 8K x 2 | 8K x 2 | |
| Port B | 8K x 2 | 4K x 4 | 2K x 9 | 1K x 18 | 512 x 36 | |
| Port A | 4K x 4 | 4K x 4 | 4K x 4 | 4K x 4 | | |
| Port B | 4K x 4 | 2K x 9 | 1K x 18 | 512 x 36 | | |
| Port A | 2K x 9 | 2K x 9 | 2K x 9 | | | |
| Port B | 2K x 9 | 1K x 18 | 512 x 36 | | | |
| Port A | 1K x 18 | 1K x 18 | | | | |
| Port B | 1K x 18 | 512 x 36 | | | | |
| Port A | 512 x 36 | | | | | |
| Port B | 512 x 36 | | | | | |

Each block SelectRAM+ cell is a fully synchronous memory, as illustrated in Figure 48. The two ports have independent inputs and outputs and are independently clocked.

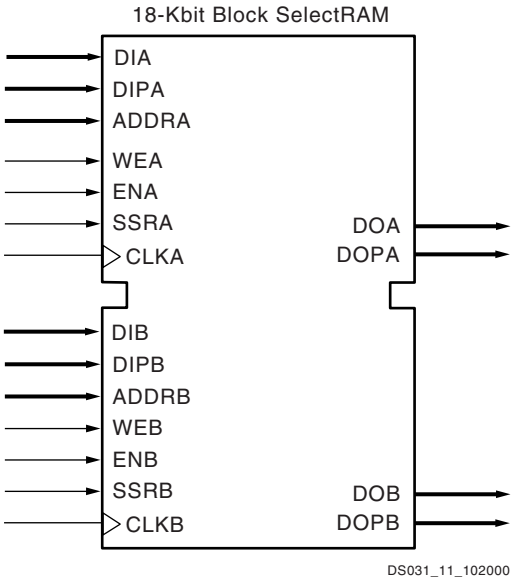


*Figure 48:* **18 Kb Block SelectRAM+ in Dual-Port Mode**

### Port Aspect Ratios

Table 23 shows the depth and the width aspect ratios for the 18 Kb block SelectRAM+ resource. Virtex-II Pro block SelectRAM+ also includes dedicated routing resources to provide an efficient interface with CLBs, block SelectRAM+, and multipliers.

*Table 23:* **18 Kb Block SelectRAM+ Port Aspect Ratio**

| Width | Depth | Address Bus | Data Bus | Parity Bus |
|---|---|---|---|---|
| 1 | 16,384 | ADDR[13:0] | DATA[0] | N/A |
| 2 | 8,192 | ADDR[12:0] | DATA[1:0] | N/A |
| 4 | 4,096 | ADDR[11:0] | DATA[3:0] | N/A |
| 9 | 2,048 | ADDR[10:0] | DATA[7:0] | Parity[0] |
| 18 | 1,024 | ADDR[9:0] | DATA[15:0] | Parity[1:0] |
| 36 | 512 | ADDR[8:0] | DATA[31:0] | Parity[3:0] |

### *Read/Write Operations*

The Virtex-II Pro block SelectRAM+ read operation is fully synchronous. An address is presented, and the read operation is enabled by control signal ENA or ENB. Then, depending on clock polarity, a rising or falling clock edge causes the stored data to be loaded into output registers.

The write operation is also fully synchronous. Data and address are presented, and the write operation is enabled by control signals WEA and WEB in addition to ENA or ENB. Then, again depending on the clock input mode, a rising or falling clock edge causes the data to be loaded into the memory cell addressed.

A write operation performs a simultaneous read operation. Three different options are available, selected by configuration:

1. **WRITE_FIRST**

   The WRITE_FIRST option is a transparent mode. The same clock edge that writes the data input (DI) into the memory also transfers DI into the output registers DO, as shown in Figure 49.

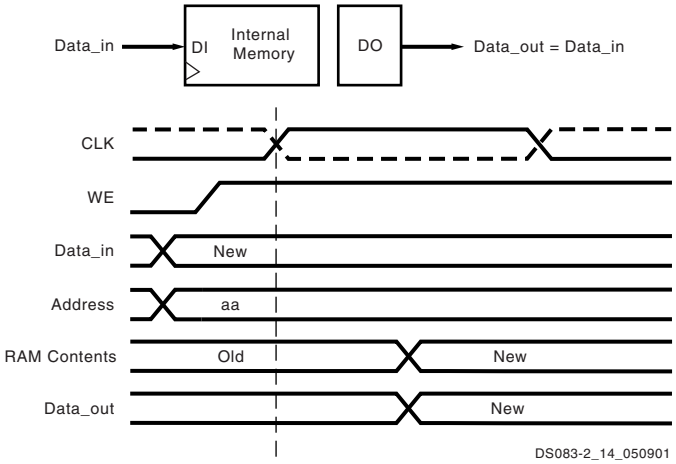


*Figure 49:* **WRITE_FIRST Mode**

2. **READ_FIRST**

The READ_FIRST option is a read-before-write mode.

The same clock edge that writes data input (DI) into the memory also transfers the prior content of the memory cell addressed into the data output registers DO, as shown in Figure 50.

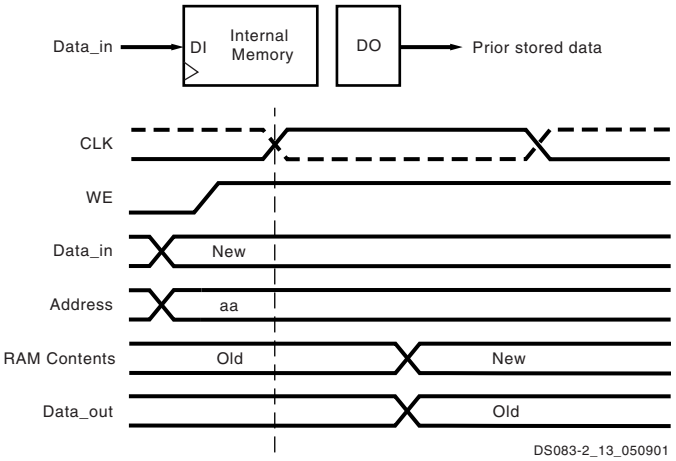


*Figure 50:* **READ_FIRST Mode**

### 3. NO_CHANGE

The NO_CHANGE option maintains the content of the output registers, regardless of the write operation. The clock edge during the write mode has no effect on the content of the data output register DO. When the port is configured as NO_CHANGE, only a read operation loads a new value in the output register DO, as shown in Figure 51.

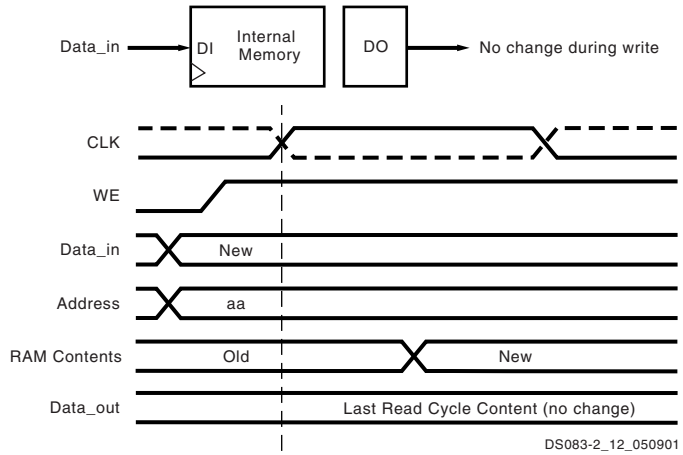


*Figure 51:* **NO_CHANGE Mode**

## *Control Pins and Attributes*

Virtex-II Pro SelectRAM+ memory has two independent ports with the control signals described in Table 24. All control inputs including the clock have an optional inversion.

*Table 24:* **Control Functions**

| Control Signal | Function |
|---|---|
| CLK | Read and Write Clock |
| EN | Enable affects Read, Write, Set, Reset |
| WE | Write Enable |
| SSR | Set DO register to SRVAL (attribute) |

Initial memory content is determined by the INIT_xx attributes. Separate attributes determine the output register value after device configuration (INIT) and SSR is asserted (SRVAL). Both attributes (INIT_B and SRVAL) are available for each port when a block SelectRAM+ resource is configured as dual-port RAM.

## *Total Amount of SelectRAM+ Memory*

Virtex-II Pro SelectRAM+ memory blocks are organized in multiple columns. The number of blocks per column depends on the row size, the number of Processor Blocks, and the number of RocketIO transceivers.

Table 25 shows the number of columns as well as the total amount of block SelectRAM+ memory available for each Virtex-II Pro device. The 18 Kb SelectRAM+ blocks are cascadable to implement deeper or wider single- or dual-port memory resources.

*Table 25:* **Virtex-II Pro SelectRAM+ Memory Available**

| Device | Columns | Total SelectRAM+ Memory | | |
|---|---|---|---|---|
| | | Blocks | in Kb | in Bits |
| XC2VP2 | 4 | 12 | 216 | 221,184 |
| XC2VP4 | 4 | 28 | 504 | 516,096 |
| XC2VP7 | 6 | 44 | 792 | 811,008 |
| XC2VP20 | 8 | 88 | 1,584 | 1,622,016 |
| XC2VP30 | 8 | 136 | 2,448 | 2,506,752 |
| XC2VPX20 | 8 | 88 | 1,584 | 1,622,016 |
| XC2VP40 | 10 | 192 | 3,456 | 3,538,944 |
| XC2VP50 | 12 | 232 | 4,176 | 4,276,224 |
| XC2VP70 | 14 | 328 | 5,904 | 6,045,696 |
| XC2VPX70 | 14 | 308 | 5,544 | 5,677,056 |
| XC2VP100 | 16 | 444 | 7,992 | 8,183,808 |

Figure 52 shows the layout of the block RAM columns in the XC2VP4 device.

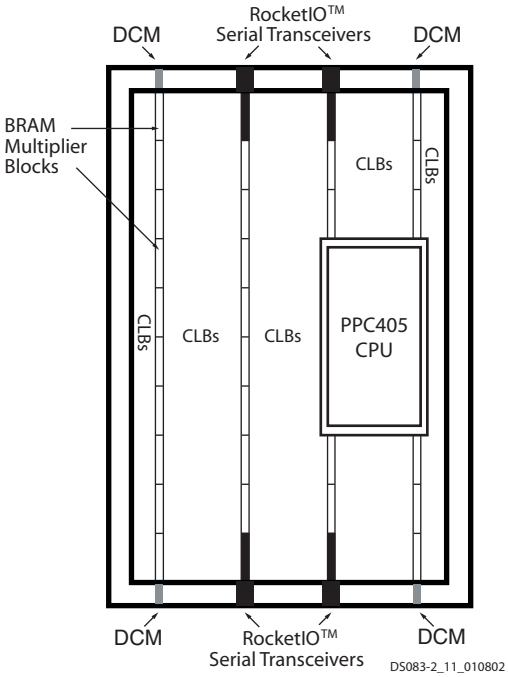


*Figure 52:* **XC2VP4 Block RAM Column Layout**

## 18-Bit x 18-Bit Multipliers

### *Introduction*

A Virtex-II Pro multiplier block is an 18-bit by 18-bit 2's complement signed multiplier. Virtex-II Pro devices incorporate many embedded multiplier blocks. These multipliers can be associated with an 18 Kb block SelectRAM+ resource or can be used independently. They are optimized for high-speed operations and have a lower power consumption compared to an 18-bit x 18-bit multiplier in slices.

Each SelectRAM+ memory and multiplier block is tied to four switch matrices, as shown in Figure 53.

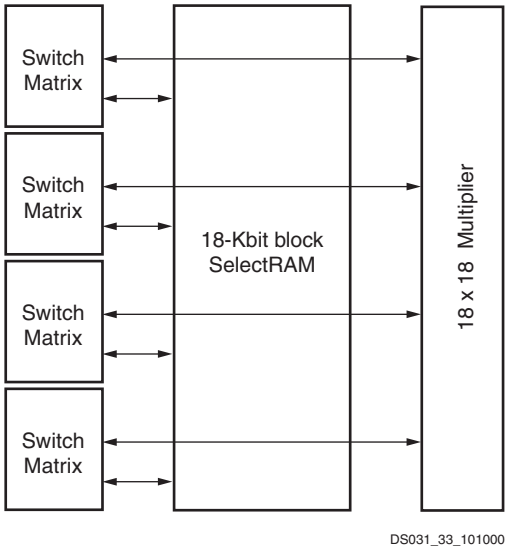


*Figure 53:* **SelectRAM+ and Multiplier Blocks**

### *Association With Block SelectRAM+ Memory*

The interconnect is designed to allow SelectRAM+ memory and multiplier blocks to be used at the same time, but some interconnect is shared between the SelectRAM+ and the multiplier. Thus, SelectRAM+ memory can be used only up to 18 bits wide when the multiplier is used, because the multiplier shares inputs with the upper data bits of the SelectRAM+ memory.

This sharing of the interconnect is optimized for an 18-bit-wide block SelectRAM+ resource feeding the multiplier. The use of SelectRAM+ memory and the multiplier with an accumulator in LUTs allows for implementation of a digital signal processor (DSP) multiplier-accumulator (MAC) function, which is commonly used in finite and infinite impulse response (FIR and IIR) digital filters.

### *Configuration*

The multiplier block is an 18-bit by 18-bit signed multiplier (2's complement). Both A and B are 18-bit-wide inputs, and the output is 36 bits. Figure 54 shows a multiplier block.

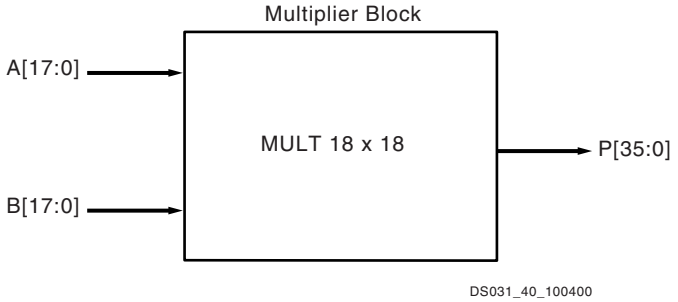


*Figure 54:* **Multiplier Block**

### *Locations / Organization*

Multiplier organization is identical to the 18 Kb SelectRAM+ organization, because each multiplier is associated with an 18 Kb block SelectRAM+ resource.

*Table 26:* **Multiplier Resources**

| Device | Columns | Total Multipliers |
|---|---|---|
| XC2VP2 | 4 | 12 |
| XC2VP4 | 4 | 28 |
| XC2VP7 | 6 | 44 |
| XC2VP20 | 8 | 88 |
| XC2VP30 | 8 | 136 |
| XC2VPX20 | 8 | 88 |
| XC2VP40 | 10 | 192 |
| XC2VP50 | 12 | 232 |
| XC2VP70 | 14 | 328 |
| XC2VPX70 | 14 | 308 |
| XC2VP100 | 16 | 444 |

In addition to the built-in multiplier blocks, the CLB elements have dedicated logic to implement efficient multipliers in logic. (Refer to Configurable Logic Blocks (CLBs), page 35).

## Global Clock Multiplexer Buffers

Virtex-II Pro devices have 16 clock input pins that can also be used as regular user I/Os. Eight clock pads center on both the top edge and the bottom edge of the device, as illustrated in Figure 55.

The global clock multiplexer buffer represents the input to dedicated low-skew clock tree distribution in Virtex-II Pro devices. Like the clock pads, eight global clock multiplexer buffers are on the top edge of the device and eight are on the bottom edge.

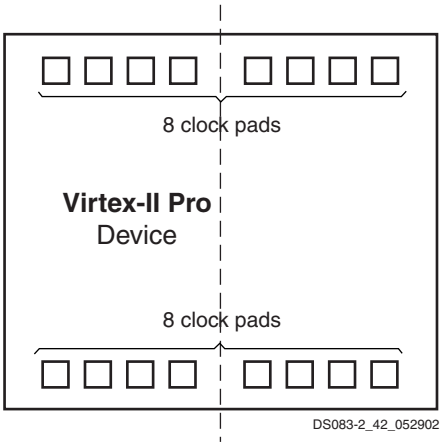


*Figure 55:* **Virtex-II Pro Clock Pads**

Each global clock multiplexer buffer can be driven either by the clock pad to distribute a clock directly to the device, or by the Digital Clock Manager (DCM), discussed in Digital Clock Manager (DCM), page 51. Each global clock multiplexer buffer can also be driven by local interconnects. The DCM has clock output(s) that can be connected to global clock multiplexer buffer inputs, as shown in Figure 56.

Global clock buffers are used to distribute the clock to some or all synchronous logic elements (such as registers in CLBs and IOBs, and SelectRAM+ blocks.

Eight global clocks can be used in each quadrant of the Virtex-II Pro device. Designers should consider the clock distribution detail of the device prior to pin-locking and floorplanning. (See the *Virtex-II Pro Platform FPGA User Guide*.)

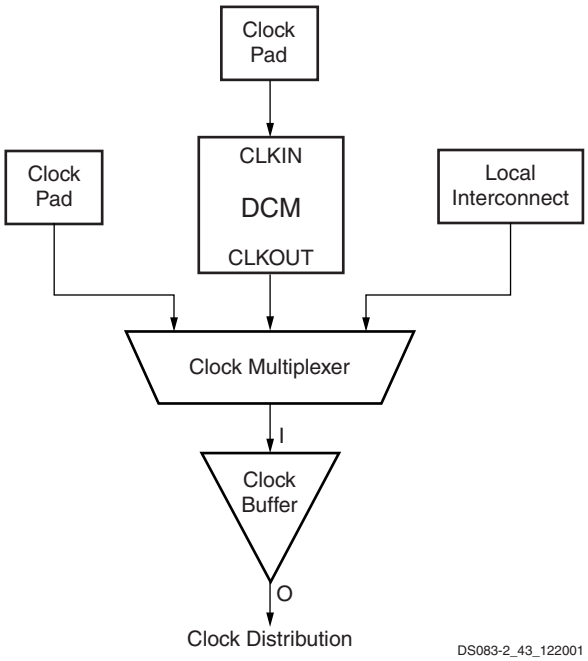


*Figure 56:* **Virtex-II Pro Clock Multiplexer Buffer Configuration**

Figure 57 shows clock distribution in Virtex-II Pro devices.

In each quadrant, up to eight clocks are organized in clock rows. A clock row supports up to 16 CLB rows (eight up and eight down). To reduce power consumption, any unused clock branches remain static.

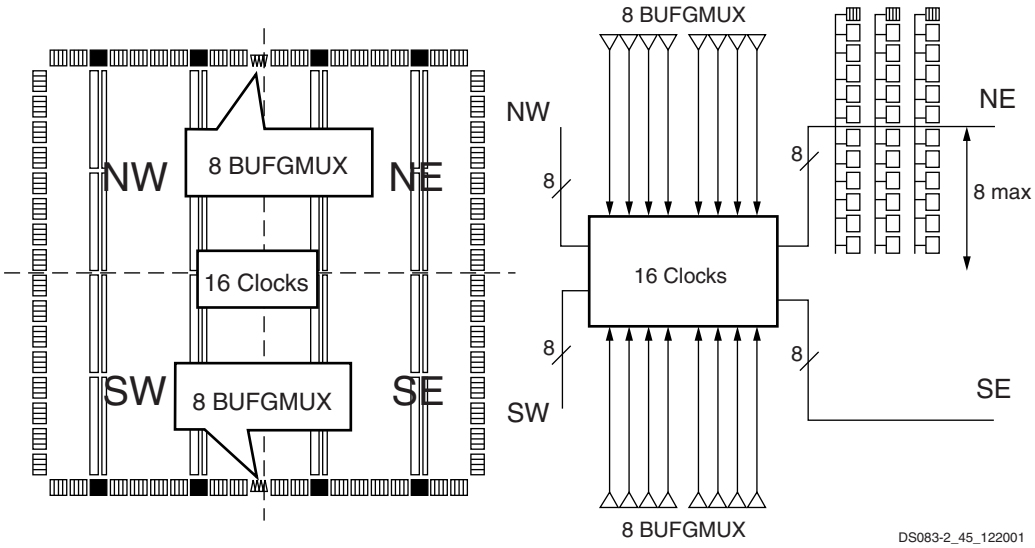


*Figure 57:* **Virtex-II Pro Clock Distribution**

Global clocks are driven by dedicated clock buffers (BUFG), which can also be used to gate the clock (BUFGCE) or to multiplex between two independent clock inputs (BUFGMUX).

The most common configuration option of this element is as a buffer. A BUFG function in this (global buffer) mode, is shown in Figure 58.

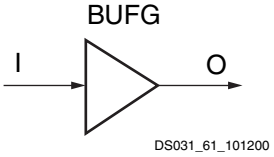


*Figure 58:* **Virtex-II Pro BUFG Function**

The Virtex-II Pro global clock buffer BUFG can also be configured as a clock enable/disable circuit (Figure 59), as well as a two-input clock multiplexer (Figure 60). A functional description of these two options is provided below. Each of them can be used in either of two modes, selected by configuration: rising clock edge or falling clock edge.

This section describes the rising clock edge option. For the opposite option, falling clock edge, just change all "rising" references to "falling" and all "High" references to "Low", except for the description of the CE and S levels. The rising clock edge option uses the BUFGCE and BUFGMUX primitives. The falling clock edge option uses the BUFGCE_1 and BUFGMUX_1 primitives.

### *BUFGCE*

If the CE input is active (High) prior to the incoming rising clock edge, this Low-to-High-to-Low clock pulse passes through the clock buffer. Any level change of CE during the incoming clock High time has no effect.

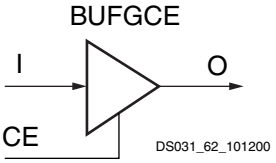


*Figure 59:* **Virtex-II Pro BUFGCE Function**

If the CE input is inactive (Low) prior to the incoming rising clock edge, the following clock pulse does not pass through the clock buffer, and the output stays Low. Any level change of CE during the incoming clock High time has no effect. CE must not change during a short setup window just prior to the rising clock edge on the BUFGCE input I. Violating this setup time requirement can result in an undefined runt pulse output.

### *BUFGMUX*

BUFGMUX can switch between two unrelated, even asynchronous clocks. Basically, a Low on S selects the $I_0$ input, a High on S selects the $I_1$ input. Switching from one clock to the other is done in such a way that the output High and Low time is never shorter than the shortest High or Low time of either input clock. As long as the presently selected clock is High, any level change of S has no effect.

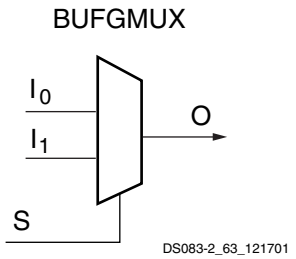


*Figure 60:* **Virtex-II Pro BUFGMUX Function**

If the presently selected clock is Low while S changes, or if it goes Low after S has changed, the output is kept Low until the other ("to-be-selected") clock has made a transition from High to Low. At that instant, the new clock starts driving the output.

The two clock inputs can be asynchronous with regard to each other, and the S input can change at any time, except for a short setup time prior to the rising edge of the presently selected clock (I0 or I1). Violating this setup time requirement can result in an undefined runt pulse output.

All Virtex-II Pro devices have 16 global clock multiplexer buffers.

Figure 61 shows a switchover from I0 to I1.

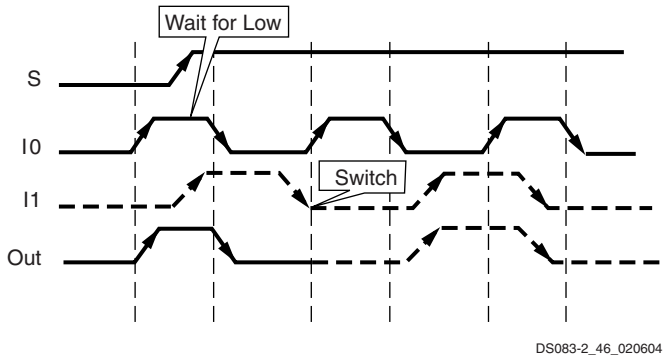


*Figure 61:* **Clock Multiplexer Waveform Diagram**

- The current clock is CLK0.
- S is activated High.
- If CLK0 is currently High, the multiplexer waits for CLK0 to go Low.
- Once CLK0 is Low, the multiplexer output stays Low until CLK1 transitions High to Low.
- When CLK1 transitions from High to Low, the output switches to CLK1.
- No glitches or short pulses can appear on the output.

## Local Clocking

In addition to global clocks, there are local clock resources in the Virtex-II Pro devices. There are more than 72 local clocks in the Virtex-II Pro family. These resources can be used for many different applications, including but not limited to memory interfaces. For example, even using only the left and right I/O banks, Virtex-II Pro FPGAs can support up to 50 local clocks for DDR SDRAM. These interfaces can operate beyond 200 MHz on Virtex-II Pro devices.

## Digital Clock Manager (DCM)

The Virtex-II Pro DCM offers a wide range of powerful clock management features.

- **Clock De-skew**: The DCM generates new system clocks (either internally or externally to the FPGA), which are phase-aligned to the input clock, thus eliminating clock distribution delays.
- **Frequency Synthesis**: The DCM generates a wide range of output clock frequencies, performing very flexible clock multiplication and division.
- **Phase Shifting**: The DCM provides both coarse phase shifting and fine-grained phase shifting with dynamic phase shift control.

The DCM utilizes fully digital delay lines allowing robust high-precision control of clock phase and frequency. It also utilizes fully digital feedback systems, operating dynamically to compensate for temperature and voltage variations during operation.

Up to four of the nine DCM clock outputs can drive inputs to global clock buffers or global clock multiplexer buffers simultaneously (see Figure 62). All DCM clock outputs can simultaneously drive general routing resources, including routes to output buffers.

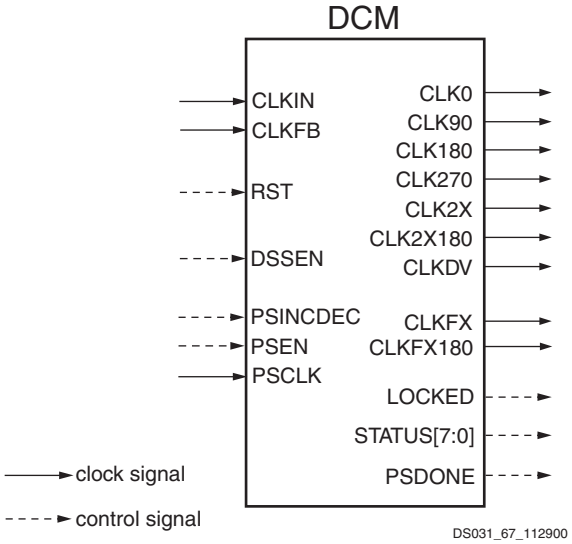


*Figure 62:* **Digital Clock Manager**

The DCM can be configured to delay the completion of the Virtex-II Pro configuration process until after the DCM has achieved lock. This guarantees that the chip does not begin operating until after the system clocks generated by the DCM have stabilized.

The DCM has the following general control signals:

- RST input pin: resets the entire DCM
- LOCKED output pin: asserted High when all enabled DCM circuits have locked.
- STATUS output pins (active High): shown in Table 27.

*Table 27:* **DCM Status Pins**

| Status Pin | Function |
|---|---|
| 0 | Phase Shift Overflow |
| 1 | CLKIN Stopped |
| 2 | CLKFX Stopped |
| 3 | N/A |
| 4 | N/A |
| 5 | N/A |
| 6 | N/A |
| 7 | N/A |

### *Clock De-skew*

The DCM de-skews the output clocks relative to the input clock by automatically adjusting a digital delay line. Additional delay is introduced so that clock edges arrive at internal registers and block RAMs simultaneously with the clock edges arriving at the input clock pad. Alternatively, external clocks, which are also de-skewed relative to the input clock, can be generated for board-level routing. All DCM output clocks are phase-aligned to CLK0 and, therefore, are also phase-aligned to the input clock.

To achieve clock de-skew, connect the CLKFB input to CLK0. Note that CLKFB must always be connected, unless only the CLKFX or CLKFX180 outputs are used and de-skew is not required.

### *Frequency Synthesis*

The DCM provides flexible methods for generating new clock frequencies. Each method has a different operating frequency range and different AC characteristics. The CLK2X and CLK2X180 outputs double the clock frequency. The CLKDV output creates divided output clocks with division options of 1.5, 2, 2.5, 3, 3.5, 4, 4.5, 5, 5.5, 6, 6.5, 7, 7.5, 8, 9, 10, 11, 12, 13, 14, 15, and 16.

The CLKFX and CLKFX180 outputs can be used to produce clocks at the following frequency:

$$\mathrm{FREQ}_{\mathrm{CLKFX}} = (M/D) \bullet \mathrm{FREQ}_{\mathrm{CLKIN}}$$

where $M$ and $D$ are two integers. Specifications for $M$ and $D$ are provided under **DCM Timing Parameters** in Virtex-II Pro and Virtex-II Pro X Platform FPGAs: DC and Switching Characteristics. By default, $M = 4$ and $D = 1$, which results in a clock output frequency four times faster than the clock input frequency (CLKIN).

CLK2X180 is phase shifted 180 degrees relative to CLK2X. CLKFX180 is phase shifted 180 degrees relative to CLKFX. All frequency synthesis outputs automatically have 50/50 duty cycles, with the exception of the CLKDV output when performing a non-integer divide in high-frequency mode. See Table 28 for more details.

Note that CLK2X and CLK2X180 are not available in high-frequency mode.

*Table 28:* **CLKDV Duty Cycle for Non-integer Divides**

| CLKDV_DIVIDE | Duty Cycle |
|---|---|
| 1.5 | 1/3 |
| 2.5 | 2/5 |
| 3.5 | 3/7 |
| 4.5 | 4/9 |
| 5.5 | 5/11 |
| 6.5 | 6/13 |
| 7.5 | 7/15 |

### *Phase Shifting*

The DCM provides additional control over clock skew through either coarse or fine-grained phase shifting. The CLK0, CLK90, CLK180, and CLK270 outputs are each phase shifted by ¼ of the input clock period relative to each other, providing coarse phase control. Note that CLK90 and CLK270 are not available in high-frequency mode.

Fine-phase adjustment affects all nine DCM output clocks. When activated, the phase shift between the rising edges of CLKIN and CLKFB is a specified fraction of the input clock period.

In variable mode, the PHASE_SHIFT value can also be dynamically incremented or decremented as determined by PSINCDEC synchronously to PSCLK, when the PSEN input is active. Figure 63 illustrates the effects of fine-phase shifting. For more information on DCM features, see the *Virtex-II Pro Platform FPGA User Guide*.

Table 29 lists fine-phase shifting control pins, when used in variable mode.

*Table 29:* **Fine Phase Shifting Control Pins**

| Control Pin | Direction | Function |
|---|---|---|
| PSINCDEC | In | Increment or decrement |
| PSEN | In | Enable ± phase shift |
| PSCLK | In | Clock for phase shift |
| PSDONE | Out | Active when completed |

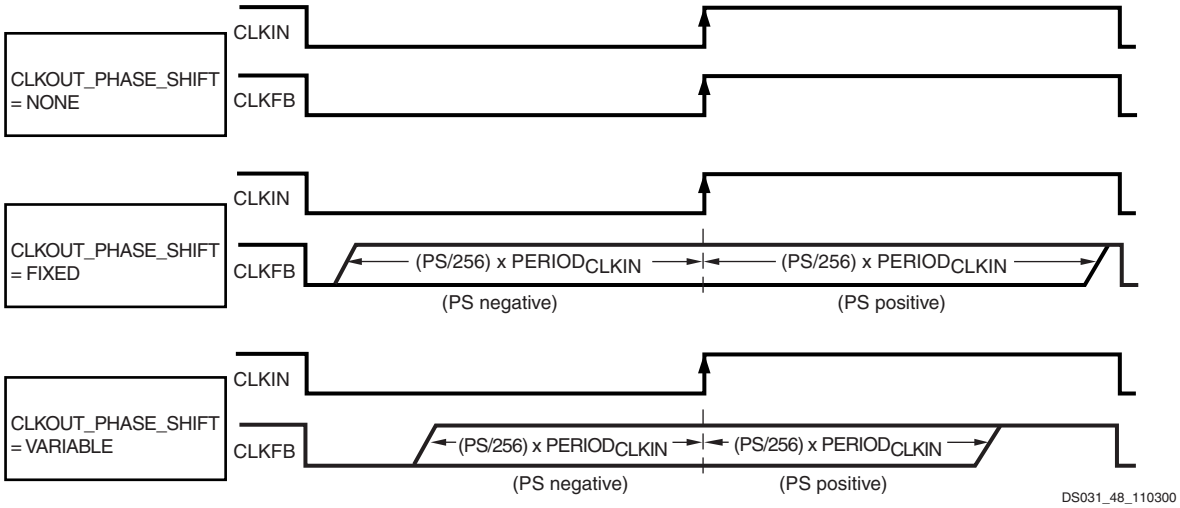


*Figure 63:* **Fine-Phase Shifting Effects**

Two separate components of the phase shift range must be understood:

- PHASE_SHIFT attribute range
- FINE_SHIFT_RANGE DCM timing parameter range

The PHASE_SHIFT attribute is the numerator in the following equation:

$$\text{Phase Shift (ns)} = (\text{PHASE_SHIFT}/256) * \text{PERIOD}_{\text{CLKIN}}$$

The full range of this attribute is always -255 to +255, but its practical range varies with CLKIN frequency, as constrained by the FINE_SHIFT_RANGE component, which represents the total delay achievable by the phase shift delay line. Total delay is a function of the number of delay taps used in the circuit. Across process, voltage, and temperature, this absolute range is guaranteed to be as specified under **DCM Timing Parameters** in Virtex-II Pro and Virtex-II Pro X Platform FPGAs: DC and Switching Characteristics.

Absolute range (fixed mode) = ± FINE_SHIFT_RANGE

Absolute range (variable mode) = ± FINE_SHIFT_RANGE/2

The reason for the difference between fixed and variable modes is as follows. For variable mode to allow symmetric, dynamic sweeps from -255/256 to +255/256, the DCM sets the "zero phase skew" point as the middle of the delay line, thus dividing the total delay line range in half. In fixed mode, since the PHASE_SHIFT value never changes after configuration, the entire delay line is available for insertion into either the CLKIN or CLKFB path (to create either positive or negative skew).

Taking both of these components into consideration, the following are some usage examples:

- If $\text{PERIOD}_{\text{CLKIN}}$ = 2 * FINE_SHIFT_RANGE, then PHASE_SHIFT in fixed mode is limited to ± 128, and in variable mode it is limited to ± 64.
- If $\text{PERIOD}_{\text{CLKIN}}$ = FINE_SHIFT_RANGE, then PHASE_SHIFT in fixed mode is limited to ± 255, and in variable mode it is limited to ± 128.
- If $\text{PERIOD}_{\text{CLKIN}} \leq 0.5$ * FINE_SHIFT_RANGE, then PHASE_SHIFT is limited to ± 255 in either mode.

### *Operating Modes*

The frequency ranges of DCM input and output clocks depend on the operating mode specified, either low-frequency mode or high-frequency mode, according to Table 30. For actual values, see Virtex-II Pro and Virtex-II Pro X Platform FPGAs: DC and Switching Characteristics. The CLK2X, CLK2X180, CLK90, and CLK270 outputs are not available in high-frequency mode.

High or low-frequency mode is selected by an attribute.

*Table 30:* **DCM Frequency Ranges**

| Output Clock | Low-Frequency Mode | | High-Frequency Mode | |
|---|---|---|---|---|
| | CLKIN Input | CLK Output | CLKIN Input | CLK Output |
| CLK0, CLK180 | CLKIN_FREQ_DLL_LF | CLKOUT_FREQ_1X_LF | CLKIN_FREQ_DLL_HF | CLKOUT_FREQ_1X_HF |
| CLK90, CLK270 | CLKIN_FREQ_DLL_LF | CLKOUT_FREQ_1X_LF | NA | NA |
| CLK2X, CLK2X180 | CLKIN_FREQ_DLL_LF | CLKOUT_FREQ_2X_LF | NA | NA |
| CLKDV | CLKIN_FREQ_DLL_LF | CLKOUT_FREQ_DV_LF | CLKIN_FREQ_DLL_HF | CLKOUT_FREQ_DV_HF |
| CLKFX, CLKFX180 | CLKIN_FREQ_FX_LF | CLKOUT_FREQ_FX_LF | CLKIN_FREQ_FX_HF | CLKOUT_FREQ_FX_HF |

# Routing

## DCM and MGT Locations/Organization

Virtex-II Pro DCMs and serial transceivers (MGTs) are placed on the top and bottom of each block RAM and multiplier column in some combination, as shown in Table 31. The number of DCMs and RocketIO transceivers total twice the number of block RAM columns in the device. Refer to Figure 52, page 47 for an illustration of this in the XC2VP4 device.

*Table 31:* **DCM and MGT Organization**

| Device | Block RAM Columns | DCMs | MGTs |
|---|---|---|---|
| XC2VP2 | 4 | 4 | 4 |
| XC2VP4 | 4 | 4 | 4 |
| XC2VP7 | 6 | 4 | 8 |
| XC2VP20 | 8 | 8 | 8 |
| XC2VPX20 | 8 | 8 | 8 |
| XC2VP30 | 8 | 8 | 8 |
| XC2VP40 | 10 | 8 | 12 |
| XC2VP50 | 12 | 8 | 16 |
| XC2VP70 | 14 | 8 | 20 |
| XC2VPX70 | 14 | 8 | 20 |
| XC2VP100 | 16 | 12 | 20 |

Place-and-route software takes advantage of this regular array to deliver optimum system performance and fast compile times. The segmented routing resources are essential to guarantee IP cores portability and to efficiently handle an incremental design flow that is based on modular implementations. Total design time is reduced due to fewer and shorter design iterations.

## Hierarchical Routing Resources

Most Virtex-II Pro signals are routed using the global routing resources, which are located in horizontal and vertical routing channels between each switch matrix.

As shown in Figure 64, page 54, Virtex-II Pro has fully buffered programmable interconnections, with a number of resources counted between any two adjacent switch matrix rows or columns. Fanout has minimal impact on the performance of each net.

- The long lines are bidirectional wires that distribute signals across the device. Vertical and horizontal long lines span the full height and width of the device.
- The hex lines route signals to every third or sixth block away in all four directions. Organized in a staggered pattern, hex lines can only be driven from one end. Hex-line signals can be accessed either at the endpoints or at the midpoint (three blocks from the source).

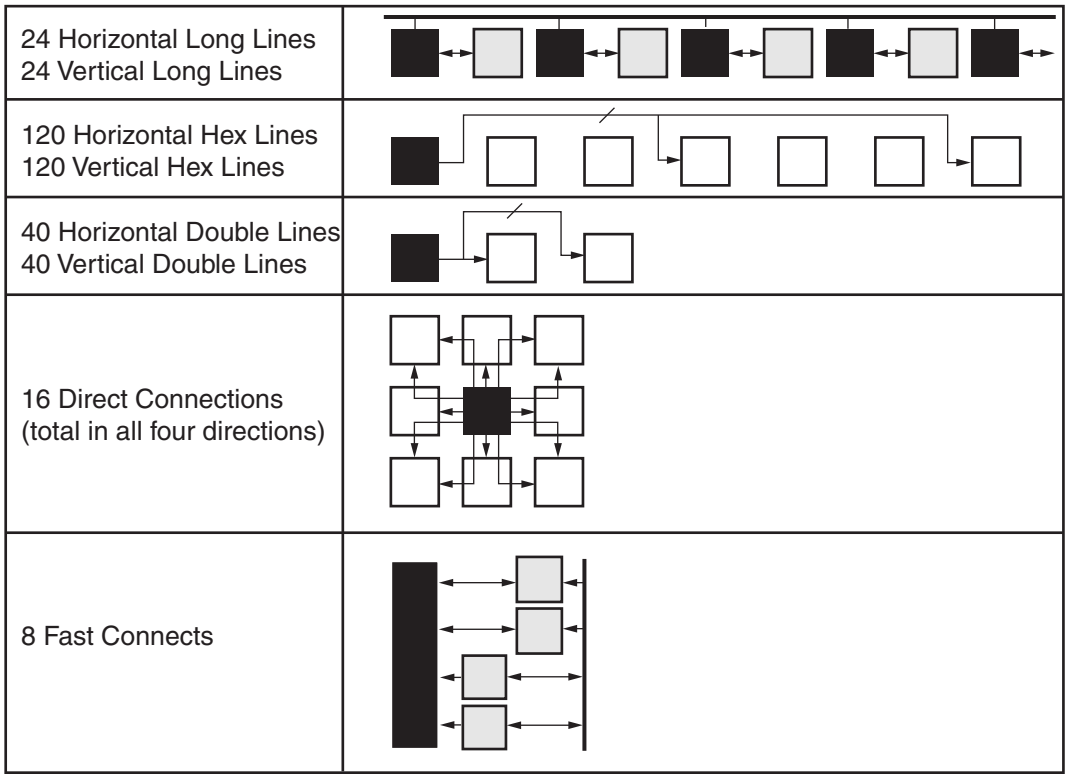


*Figure 64:* **Hierarchical Routing Resources**

- The double lines route signals to every first or second block away in all four directions. Organized in a staggered pattern, double lines can be driven only at their endpoints. Double-line signals can be accessed either at the endpoints or at the midpoint (one block from the source).
- The direct connect lines route signals to neighboring blocks: vertically, horizontally, and diagonally.
- The fast connect lines are the internal CLB local interconnections from LUT outputs to LUT inputs.

## Dedicated Routing

In addition to the global and local routing resources, dedicated signals are available.

- There are eight global clock nets per quadrant. (See Global Clock Multiplexer Buffers, page 48.)
- Horizontal routing resources are provided for on-chip 3-state buses. Four partitionable bus lines are provided per CLB row, permitting multiple buses within a row. (See 3-State Buffers, page 43.)
- Two dedicated carry-chain resources per slice column (two per CLB column) propagate carry-chain MUXCY output signals vertically to the adjacent slice. (See CLB/Slice Configurations, page 44.)
- One dedicated SOP chain per slice row (two per CLB row) propagate ORCY output logic signals horizontally to the adjacent slice. (See Sum of Products, page 42.)
- One dedicated shift-chain per CLB connects the output of LUTs in shift-register mode to the input of the next LUT in shift-register mode (vertically) inside the CLB. (See Shift Registers, page 39.)

## Configuration

Virtex-II Pro devices are configured by loading application specific configuration data into the internal configuration memory. Configuration is carried out using a subset of the device pins, some of which are dedicated, while others can be re-used as general purpose inputs and outputs once configuration is complete.

Depending on the system design, several configuration modes are supported, selectable via mode pins. The mode pins M2, M1, and M0 are dedicated pins. The M2, M1, and M0 mode pins should be set at a constant DC voltage level, either through pull-up or pull-down resistors, or tied directly to ground or $V_{CCAUX}$. The mode pins should not be toggled during and after configuration.

An additional pin, HSWAP_EN is used in conjunction with the mode pins to select whether user I/O pins have pull-ups during configuration. By default, HSWAP_EN is tied High (internal pull-up) which shuts off the pull-ups on the user I/O pins during configuration. When HSWAP_EN is tied Low, user I/Os have pull-ups during configuration. Other dedicated pins are CCLK (the configuration clock pin), DONE, PROG_B, and the Boundary-Scan pins: TDI, TDO, TMS, and TCK. (The TDO pin is open-drain and does not have an internal pull-up resistor.) Depending on the configuration mode chosen, CCLK can be an output generated by the FPGA, or an input accepting an externally generated clock. The configuration pins and Boundary-Scan pins are independent of the $V_{CCO}$. The auxiliary power supply ($V_{CCAUX}$) of 2.5V is used for these pins. All configuration pins are LVCMOS25 12mA. See Virtex-II Pro and Virtex-II Pro X Platform FPGAs: DC and Switching Characteristics.

A "persist" option is available which can be used to force the configuration pins to retain their configuration function even after device configuration is complete. If the persist option is not selected then the configuration pins with the exception of CCLK, PROG_B, and DONE can be used as user I/O in normal operation. The persist option does not apply to the Boundary-Scan related pins. The persist feature is valuable in applications which employ partial reconfiguration or reconfiguration on the fly.

## Configuration Modes

Virtex-II Pro supports the following five configuration modes:

- Slave-Serial Mode
- Master-Serial Mode
- Slave SelectMAP Mode
- Master SelectMAP Mode
- Boundary-Scan (JTAG, IEEE 1532) Mode

Refer to Table 32, page 57.

A detailed description of configuration modes is provided in the *Virtex-II Pro Platform FPGA User Guide.*

### *Slave-Serial Mode*

In slave-serial mode, the FPGA receives configuration data in bit-serial form from a serial PROM or other serial source of configuration data. The CCLK pin on the FPGA is an input in this mode. The serial bitstream must be setup at the DIN input pin a short time before each rising edge of the externally generated CCLK.

Multiple FPGAs can be daisy-chained for configuration from a single source. After a particular FPGA has been configured, the data for the next device is routed internally to the DOUT pin. The data on the DOUT pin changes on the falling edge of CCLK.

Slave-serial mode is selected by applying [111] to the mode pins (M2, M1, M0). A weak pull-up on the mode pins makes slave serial the default mode if the pins are left unconnected.

### *Master-Serial Mode*

In master-serial mode, the CCLK pin is an output pin. It is the Virtex-II Pro FPGA device that drives the configuration clock on the CCLK pin to a Xilinx Serial PROM which in turn feeds bit-serial data to the DIN input. The FPGA accepts this data on each rising CCLK edge. After the FPGA has been loaded, the data for the next device in a daisy-chain is presented on the DOUT pin after the falling CCLK edge.

The interface is identical to slave serial except that an internal oscillator is used to generate the configuration clock (CCLK). A wide range of frequencies can be selected for CCLK which always starts at a slow default frequency. Configuration bits then switch CCLK to a higher frequency for the remainder of the configuration.

### *Slave SelectMAP Mode*

The SelectMAP mode is the fastest configuration option. Byte-wide data is written into the Virtex-II Pro FPGA device with a BUSY flag controlling the flow of data. An external data source provides a byte stream, CCLK, an active Low Chip Select (CS_B) signal and a Write signal (RDWR_B). If BUSY is asserted (High) by the FPGA, the data must be held until BUSY goes Low. Data can also be read using the SelectMAP mode. If RDWR_B is asserted, configuration data is read out of the FPGA as part of a readback operation.

After configuration, the pins of the SelectMAP port can be used as additional user I/O. Alternatively, the port can be retained to permit high-speed 8-bit readback using the persist option.

Multiple Virtex-II Pro FPGAs can be configured using the SelectMAP mode, and be made to start-up simultaneously. To configure multiple devices in this way, wire the individual CCLK, Data, RDWR_B, and BUSY pins of all the devices in parallel. The individual devices are loaded separately by deasserting the CS_B pin of each device in turn and writing the appropriate data.

### *Master SelectMAP Mode*

This mode is a master version of the SelectMAP mode. The device is configured byte-wide on a CCLK supplied by the Virtex-II Pro FPGA device. Timing is similar to the Slave SerialMAP mode except that CCLK is supplied by the Virtex-II Pro FPGA.

### *Boundary-Scan (JTAG, IEEE 1532) Mode*

In Boundary-Scan mode, dedicated pins are used for configuring the Virtex-II Pro device. The configuration is done entirely through the IEEE 1149.1 Test Access Port (TAP). Virtex-II Pro device configuration using Boundary-Scan is compatible with with IEEE 1149.1-1993 standard and the new IEEE 1532 standard for In-System Configurable (ISC) devices. The IEEE 1532 standard is backward compliant with the IEEE 1149.1-1993 TAP and state machine. The IEEE Standard 1532 for In-System Configurable (ISC) devices is intended to be programmed, reprogrammed, or tested on the board via a physical and logical protocol. Configuration through the Boundary-Scan port is always available, independent of the mode selection. Selecting the Boundary-Scan mode simply turns off the other modes.

*Table 32:* **Virtex-II Pro Configuration Mode Pin Settings**

| Configuration Mode(1) | M2 | M1 | M0 | CCLK Direction | Data Width | Serial $D_{OUT}$(2) |
|---|---|---|---|---|---|---|
| Master Serial | 0 | 0 | 0 | Out | 1 | Yes |
| Slave Serial | 1 | 1 | 1 | In | 1 | Yes |
| Master SelectMAP | 0 | 1 | 1 | Out | 8 | No |
| Slave SelectMAP | 1 | 1 | 0 | In | 8 | No |
| Boundary-Scan | 1 | 0 | 1 | N/A | 1 | No |

**Notes:**
1. The HSWAP_EN pin controls the pull-ups. Setting M2, M1, and M0 selects the configuration mode, while the HSWAP_EN pin controls whether or not the pull-ups are used.
2. Daisy chaining is possible only in modes where Serial $D_{OUT}$ is used. For example, in SelectMAP modes, the first device does NOT support daisy chaining of downstream devices.

Table 33 lists the default total number of bits required to configure each device.

*Table 33:* **Virtex-II Pro Default Bitstream Lengths**

| Device | Number of Configuration Bits |
|---|---|
| XC2VP2 | 1,305,376 |
| XC2VP4 | 3,006,496 |
| XC2VP7 | 4,485,408 |
| XC2VP20 | 8,214,560 |
| XC2VPX20 | 8,214,560 |
| XC2VP30 | 11,589,920 |
| XC2VP40 | 15,868,192 |
| XC2VP50 | 19,021,344 |
| XC2VP70 | 26,098,976 |
| XC2VPX70 | 26,098,976 |
| XC2VP100 | 34,292,768 |

## Configuration Sequence

The configuration of Virtex-II Pro devices is a three-phase process. First, the configuration memory is cleared. Next, configuration data is loaded into the memory, and finally, the logic is activated by a start-up process.

Configuration is automatically initiated on power-up unless it is delayed by the user. The INIT_B pin can be held Low using an open-drain driver. An open-drain is required since INIT_B is a bidirectional open-drain pin that is held Low by a Virtex-II Pro FPGA device while the configuration memory is being cleared. Extending the time that the pin is Low causes the configuration sequencer to wait. Thus, configuration is delayed by preventing entry into the phase where data is loaded.

The configuration process can also be initiated by asserting the PROG_B pin. The end of the memory-clearing phase is signaled by the INIT_B pin going High, and the completion of the entire process is signaled by the DONE pin going High. The Global Set/Reset (GSR) signal is pulsed after the last frame of configuration data is written but before the start-up sequence. The GSR signal resets all flip-flops on the device.

The default start-up sequence is that one CCLK cycle after DONE goes High, the global 3-state signal (GTS) is released. This permits device outputs to turn on as necessary. One CCLK cycle later, the Global Write Enable (GWE) signal is released. This permits the internal storage elements to begin changing state in response to the logic and the user clock.

The relative timing of these events can be changed via configuration options in software. In addition, the GTS and GWE events can be made dependent on the DONE pins of multiple devices all going High, forcing the devices to start

synchronously. The sequence can also be paused at any stage, until lock has been achieved on any or all DCMs, as well as DCI.

### Readback

In this mode, configuration data from the Virtex-II Pro FPGA device can be read back. Readback is supported only in the SelectMAP (master and slave) and Boundary-Scan mode.

Along with the configuration data, it is possible to read back the contents of all registers, distributed SelectRAM+, and block RAM resources. This capability is used for real-time debugging. For more detailed configuration information, see the *Virtex-II Pro Platform FPGA User Guide.*

### Bitstream Encryption

Virtex-II Pro devices have an on-chip decryptor using one or two sets of three keys for triple-key Data Encryption Standard (DES) operation. Xilinx software tools offer an optional encryption of the configuration data (bitstream) with a triple-key DES determined by the designer.

The keys are stored in the FPGA by JTAG instruction and retained by a battery connected to the $V_{BATT}$ pin, when the device is not powered. Virtex-II Pro devices can be configured with the corresponding encrypted bitstream, using any of the configuration modes described previously.

A detailed description of how to use bitstream encryption is provided in the ***Virtex-II Pro Platform FPGA User Guide***. Your local FAE can also provide specific information on this feature.

### Partial Reconfiguration

Partial reconfiguration of Virtex-II Pro devices can be accomplished in either Slave SelectMAP mode or Boundary-Scan mode. Instead of resetting the chip and doing a full configuration, new data is loaded into a specified area of the chip, while the rest of the chip remains in operation. Data is loaded on a column basis, with the smallest load unit being a configuration “frame” of the bitstream (device size dependent).

Partial reconfiguration is useful for applications that require different designs to be loaded into the same area of a chip, or that require the ability to change portions of a design without having to reset or reconfigure the entire chip.

For more information on Partial Reconfiguration in Virtex-II Pro devices, please refer to Xilinx Application Note **XAPP290**, *Two Flows for Partial Reconfiguration*.

## Revision History

This section records the change history for this module of the data sheet.

| Date | Version | Revision |
|---|---|---|
| 01/31/02 | 1.0 | Initial Xilinx release. |
| 06/13/02 | 2.0 | New Virtex-II Pro family members. New timing parameters per speedsfile **v1.62**. |
| 09/03/02 | 2.1 | • Revised Reset and Power sections.<br>• Updated Table 8, which lists compatible input standards. [Table deleted in v2.6.]<br>• Added Figure 28, Figure 29, and Figure 30, which provide examples illustrating the use of I/O standards. |
| 09/27/02 | 2.2 | • In section RocketIO Overview, corrected max number of MGTs from 16 to 24.<br>• In section Input/Output Blocks (IOBs), added references to XAPP653 regarding implementation of 3.3V I/O standards. |
| 11/20/02 | 2.3 | • Table 8: Added rows for LVTTL, LVCMOS33, and PCI-X.<br>• Table 8: Added LVTTL and LVCMOS33 to compatible 3.3V cells. [Table deleted in v2.6.]<br>• Table 33: Correct bitstream lengths. |
| 12/03/02 | 2.4 | • Added mention of LVTTL and PCI with respect to SelectIO-Ultra configurations. See section Input/Output Individual Options and Figure 22. |
| 01/20/03 | 2.5 | • Added qualification to features vs. Virtex-II (open-drain output pin TDO does not have internal pull-up resistor)<br>• Table 7: Added HSTL18 (I, II, III, & IV) and HSTL18_DCI (I,II, III & IV) to 1.8V VCCO row. [Table deleted in v2.6.]<br>• Table 8: Numerous revisions. [Table deleted in v2.6.] |

| Date | Version | Revision |
|---|---|---|
| 03/24/03 | 2.5.1 | • Table 10: Corrected I/O standard names SSTL18_I and SSTL18_II to SSTL18_I_DCI and SSTL18_II_DCI respectively.<br>• Figure 61, text below: Corrected wording of criteria for clock switching. |
| 05/27/03 | 2.6 | • Removed Compatible Output Standards and Compatible Input Standards tables.<br>• Added new Table 12, Summary of Voltage Supply Requirements for All Input and Output Standards. This table replaces deleted I/O standards tables.<br>• Corrected sentence in section Input/Output Individual Options, page 27, to read “The optional weak-keeper circuit is connected to each *user I/O pad*.”<br>• Added section Rules for Combining I/O Standards in the Same Bank, page 29. |
| 06/02/03 | 2.7 | • Added four Differential Termination I/O standards to Table 9 and Table 12.<br>• Added section On-Chip Differential Termination and Figure 31, page 34. |
| 08/25/03 | 2.7.1 | • Added footnote referring to XAPP659 to 3.3V I/O callouts in Table 8 and Table 12. |
| 09/10/03 | 2.8 | • Section Configuration, page 56: Added text indicating that the mode pins M0-M2 must be held to a constant DC level during and after configuration. |
| 10/14/03 | 2.9 | • Deleted section Functional Description: RocketIO Multi-Gigabit Transceiver (MGT), page 10. Added section Local Clocking, page 51.<br>• Sections Slave-Serial Mode and Master-Serial Mode, page 56: Changed "rising" to "falling" edge with respect to DOUT.<br>• Table 8, page 24 and Table 10, page 25: Corrected Input $V_{REF}$ for HSTL_III-IV_18 from 1.08V to 1.1V. |
| 12/10/03 | 3.0 | • XC2VP2 through XC2VP70 speed grades -5, -6, and -7, and XC2VP100 speed grades -5 and -6, are released to **Production status**. |
| 02/19/04 | 3.1 | • Section BUFGMUX, page 50: Corrected the definition of the "presently selected clock" to be I0 or I1. Corrected signal names in Figure 61 and associated text from CLK0 and CLK1 to I0 and I1. |
| 03/09/04 | 3.1.1 | • Recompiled for backward compatibility with Acrobat 4 and above. No content changes. |
| 04/22/04 | 3.2 | • Section Clock De-skew, page 52: Removed reference to CLK2X as an option for DCM clock feedback. |
| 06/30/04 | 4.0 | Merged in DS110-2 (Module 2 of Virtex-II Pro X data sheet). Separate RocketIO and RocketIO X sections created. |
| 11/17/04 | 4.1 | • Figure 11, page 12: Corrected figure by removing coupling capacitors from input.<br>• Section Rules for Combining I/O Standards in the Same Bank, page 29: Corrected I/O standard in the first example from LVDS_25_DCI to LVDS_25. |
| 03/01/05 | 4.2 | • Reassigned heading hierarchies for better agreement with content.<br>• Table 7: Corrected VCCAUXTX and VCCAUXRX to AVCCAUXTX and AVCCAUXRX respectively.<br>• Table 9: Corrected $V_{OD}$ (output voltage) range for LVDSEXT_25.<br>• Table 25: Corrected SelectRAM+ memory available for XC2VPX70 device.<br>• Table 33: Updated configuration default bitstream lengths. |
| 06/20/05 | 4.3 | *No changes in Module 2 for this revision.* |
| 09/15/05 | 4.4 | • Table 1: Deleted SONET OC-192 protocol.<br>• Table 3: Deleted RocketIO X primitives for SONET OC-192, 10 Gbit Ethernet, and Xilinx 10G (Aurora) protocols.<br>• Changed all instances of 10.3125 Gb/s to 6.25 Gb/s.<br>• Table 7: Changed RocketIO X VCCAUXRX from 1.5V globally to 1.5V for 8B/10B encoding, 1.8V for all other encoding protocols. |

| Date | Version | Revision |
|---|---|---|
| 10/10/05 | 4.5 | • Changed XC2VPX70 variable baud rate specification to fixed-rate operation at 4.25 Gb/s. |
| 03/05/07 | 4.6 | *No changes in Module 2 for this revision.* |
| 11/05/07 | 4.7 | • Updated copyright notice and legal disclaimer.<br>• Debug Interface, page 19, and Boundary-Scan (JTAG, IEEE 1532) Mode, page 57: Updated IEEE 1149.1 compliance statement. |
| 06/21/11 | 5.0 | Added *Product Not Recommended for New Designs* banner. |

## Notice of Disclaimer

THE XILINX HARDWARE FPGA AND CPLD DEVICES REFERRED TO HEREIN (“PRODUCTS”) ARE SUBJECT TO THE TERMS AND CONDITIONS OF THE XILINX LIMITED WARRANTY WHICH CAN BE VIEWED AT http://www.xilinx.com/warranty.htm. THIS LIMITED WARRANTY DOES NOT EXTEND TO ANY USE OF PRODUCTS IN AN APPLICATION OR ENVIRONMENT THAT IS NOT WITHIN THE SPECIFICATIONS STATED IN THE XILINX DATA SHEET. ALL SPECIFICATIONS ARE SUBJECT TO CHANGE WITHOUT NOTICE. PRODUCTS ARE NOT DESIGNED OR INTENDED TO BE FAIL-SAFE OR FOR USE IN ANY APPLICATION REQUIRING FAIL-SAFE PERFORMANCE, SUCH AS LIFE-SUPPORT OR SAFETY DEVICES OR SYSTEMS, OR ANY OTHER APPLICATION THAT INVOKES THE POTENTIAL RISKS OF DEATH, PERSONAL INJURY, OR PROPERTY OR ENVIRONMENTAL DAMAGE (“CRITICAL APPLICATIONS”). USE OF PRODUCTS IN CRITICAL APPLICATIONS IS AT THE SOLE RISK OF CUSTOMER, SUBJECT TO APPLICABLE LAWS AND REGULATIONS.

## Virtex-II Pro Data Sheet

The Virtex-II Pro Data Sheet contains the following modules:

- Virtex-II Pro and Virtex-II Pro X Platform FPGAs: Introduction and Overview (Module 1)
- Virtex-II Pro and Virtex-II Pro X Platform FPGAs: Functional Description (Module 2)
- Virtex-II Pro and Virtex-II Pro X Platform FPGAs: DC and Switching Characteristics (Module 3)
- Virtex-II Pro and Virtex-II Pro X Platform FPGAs: Pinout Information (Module 4)

# Virtex-II Pro and Virtex-II Pro X Platform FPGAs: DC and Switching Characteristics

DS083 (v5.0) June 21, 2011 **Product Specification**

## Virtex-II Pro[1] Electrical Characteristics

Virtex™-II Pro devices are provided in -7, -6, and -5 speed grades, with -7 having the highest performance.

Virtex-II Pro DC and AC characteristics are specified for both commercial and industrial grades. Except the operating temperature range or unless otherwise noted, all the DC and AC electrical parameters are the same for a particular speed grade (that is, the timing characteristics of a -6 speed grade industrial device are the same as for a -6 speed grade commercial device). However, only selected speed grades and/or devices might be available in the industrial range.

All supply voltage and junction temperature specifications are representative of worst-case conditions. The parameters included are common to popular designs and typical applications. Contact Xilinx for design considerations requiring more detailed information.

All specifications are subject to change without notice.

### Virtex-II Pro DC Characteristics

*Table 1:* **Absolute Maximum Ratings**

| Symbol | Description[1] | | Virtex-II Pro X | Virtex-II Pro | Units |
|---|---|---|---|---|---|
| $V_{CCINT}$ | Internal supply voltage relative to GND | | –0.5 to 1.6 | | V |
| $V_{CCAUX}$ | Auxiliary supply voltage relative to GND | | –0.5 to 3.0 | | V |
| $V_{CCO}$ | Output drivers supply voltage relative to GND | | –0.5 to 3.75 | | V |
| $V_{BATT}$ | Key memory battery backup supply | | –0.5 to 4.05 | | V |
| $V_{REF}$ | Input reference voltage | | –0.3 to 3.75 | | V |
| $V_{IN}$ | 3.3V I/O input voltage relative to GND (user and dedicated I/Os) | | –0.3 to 4.05[3] | | V |
| | 2.5V or below I/O input voltage relative to GND (user and dedicated I/Os) | | –0.5 to $V_{CCO}$ + 0.5 | | V |
| $V_{TS}$ | Voltage applied to 3-state 3.3V output (user and dedicated I/Os) | | –0.3 to 4.05[3] | | V |
| | Voltage applied to 3-state 2.5V or below output (user and dedicated I/Os) | | –0.5 to $V_{CCO}$ + 0.5 | | V |
| AVCCAUXRX | Receive auxilliary supply voltage relative to GNDA (analog ground) | | –0.5 to 2.0 | –0.5 to 3.0 | V |
| AVCCAUXTX | Transmit auxilliary supply voltage relative to GNDA (analog ground) | | –0.5 to 3.0 | –0.5 to 3.0 | V |
| $V_{TRX}$ | Terminal receive supply voltage relative to GND | | –0.5 to 3.0 | –0.5 to 3.0 | V |
| $V_{TTX}$ | Terminal transmit supply voltage relative to GND | | –0.5 to 1.6 | –0.5 to 3.0 | V |
| $T_{STG}$ | Storage temperature (ambient) | | –65 to +150 | | °C |
| $T_{SOL}$ | Maximum soldering temperature[2] | All regular FG/FF flip-chip packages | +220 | | °C |
| | | Pb-free FGG256 wire-bond package | N/A | +260 | °C |
| | | Pb-free FGG456 and FGG676 wire-bond packages | N/A | +250 | °C |
| $T_J$ | Maximum junction temperature[2] | | +125 | | °C |

**Notes:**

1. Stresses beyond those listed under Absolute Maximum Ratings might cause permanent damage to the device. These are stress ratings only, and functional operation of the device at these or any other conditions beyond those listed under Operating Conditions is not implied. Exposure to Absolute Maximum Ratings conditions for extended periods of time might affect device reliability.
2. For soldering guidelines and thermal considerations, see the **Device Packaging and Thermal Characteristics Guide** information on the Xilinx website.
3. 3.3V I/O Absolute Maximum limit applied to DC and AC signals. Refer to **XAPP659** for more details.

1. Unless otherwise noted, "Virtex-II Pro" refers to members of the Virtex-II Pro and/or Virtex-II Pro X families.

© 2000–2011 Xilinx, Inc. All rights reserved. XILINX, the Xilinx logo, the Brand Window, and other designated brands included herein are trademarks of Xilinx, Inc. PowerPC is a trademark of IBM Corp. and is used under license. All other trademarks are the property of their respective owners.

*Table 2:* **Recommended Operating Conditions**

| Symbol | Description | Grade | Virtex-II Pro X | | Virtex-II Pro | | Units |
|---|---|---|---|---|---|---|---|
| | | | Min | Max | Min | Max | |
| $V_{CCINT}$ | Internal supply voltage relative to GND, $T_J$ = 0 °C to +85°C | Comm. | 1.425 | 1.575 | 1.425 | 1.575 | V |
| | Internal supply voltage relative to GND, $T_J$ = –40°C to +100°C | Indus. | 1.425 | 1.575 | 1.425 | 1.575 | V |
| $V_{CCAUX}$(1) | Auxiliary supply voltage relative to GND, $T_J$ = 0 °C to +85°C | Comm. | 2.375 | 2.625 | 2.375 | 2.625 | V |
| | Auxiliary supply voltage relative to GND, $T_J$ = –40°C to +100°C | Indus. | 2.375 | 2.625 | 2.375 | 2.625 | V |
| $V_{CCO}$(2,3) | Supply voltage relative to GND, $T_J$ = 0 °C to +85°C | Comm. | 1.2 | 3.45(5) | 1.2 | 3.45(5) | V |
| | Supply voltage relative to GND, $T_J$ = –40°C to +100°C | Indus. | 1.2 | 3.45(5) | 1.2 | 3.45(5) | V |
| $V_{IN}$ | 3.3V supply voltage relative to GND, $T_J$ = 0 °C to +85°C | Comm. | GND – 0.2 | 3.45(5) | GND – 0.2 | 3.45(5) | V |
| | 3.3V supply voltage relative to GND, $T_J$ = –40°C to +100°C | Indus. | GND – 0.2 | 3.45(5) | GND – 0.2 | 3.45(5) | V |
| | 2.5V and below supply voltage relative to GND, $T_J$ = 0 °C to +85°C | Comm. | GND – 0.2 | $V_{CCO}$ + 0.2 | GND – 0.2 | $V_{CCO}$ + 0.2 | V |
| | 2.5V and below supply voltage relative to GND, $T_J$ = –40°C to +100°C | Indus. | GND – 0.2 | $V_{CCO}$ + 0.2 | GND – 0.2 | $V_{CCO}$ + 0.2 | V |
| $V_{BATT}$(4) | Battery voltage relative to GND, $T_J$ = 0 °C to +85°C | Comm. | 1.0 | 3.6 | 1.0 | 3.6 | V |
| | Battery voltage relative to GND, $T_J$ = –40°C to +100°C | Indus. | 1.0 | 3.6 | 1.0 | 3.6 | V |
| AVCCAUXRX(6) | Auxilliary receive supply voltage relative to GNDA | Comm. | 1.425(7) | 1.575(7) | 2.375 | 2.625 | V |
| | | Indus. | 1.425(7) | 1.575(7) | 2.375 | 2.625 | V |
| AVCCAUXTX(6) | Auxilliary transmit supply voltage relative to GNDA | Comm. | 2.375 | 2.625 | 2.375 | 2.625 | V |
| | | Indus. | 2.375 | 2.625 | 2.375 | 2.625 | V |
| $V_{TRX}$ | Terminal receive supply voltage relative to GND | Comm. | 0 | 2.625 | 1.6 | 2.625 | V |
| | | Indus. | 0 | 2.625 | 1.6 | 2.625 | V |
| $V_{TTX}$ | Terminal transmit supply voltage relative to GND | Comm. | 1.425 | 1.575 | 1.6 | 2.625 | V |
| | | Indus. | 1.425 | 1.575 | 1.6 | 2.625 | V |

**Notes:**
1. Recommended maximum voltage droop for $V_{CCAUX}$ is 10 mV/ms.
2. Configuration data is retained even if $V_{CCO}$ drops to 0V.
3. For 3.3V I/O operation, refer to **XAPP659**, available on the Xilinx website at **www.xilinx.com**.
4. If battery is not used, connect $V_{BATT}$ to GND or $V_{CCAUX}$.
5. For PCI and PCI-X, refer to **XAPP653**, available on the Xilinx website at **www.xilinx.com**.
6. **IMPORTANT!** The RocketIO transceivers have certain power guidelines that must be met, even if unused in the design. Please refer to the section entitled "Powering the RocketIO Transceivers" in the ***RocketIO Transceiver User Guide*** or ***RocketIO X Transceiver User Guide*** for more details.
7. For non-8B/10B-encoded data, the specification for AVCCAUXRX is 1.8V ±5% (1.71 – 1.89V).

*Table 3:* **DC Characteristics Over Recommended Operating Conditions**

| Symbol | Description | Virtex-II Pro X | | | Virtex-II Pro | | | Units |
|---|---|---|---|---|---|---|---|---|
| | | Min | Typ | Max | Min | Typ | Max | |
| $V_{DRINT}$ | Data retention $V_{CCINT}$ voltage (below which configuration data might be lost) | 1.25 | | | 1.25 | | | V |
| $V_{DRI}$ | Data retention $V_{CCAUX}$ voltage (below which configuration data might be lost) | 2.0 | | | 2.0 | | | V |
| $I_{REF}$ | $V_{REF}$ current per pin | | | 10 | | | 10 | µA |
| $I_L$ | Input or output leakage current per pin (sample-tested) | | | 10 | | | 10 | µA |
| $C_{IN}$ | Input capacitance (sample-tested) | | | 10 | | | 10 | pF |
| $I_{RPU}$ | Pad pull-up (when selected) @ $V_{in}$ = 0V, $V_{CCO}$ = 2.5V (sample tested) | | | 150 | | | 150 | µA |
| $I_{RPD}$ | Pad pull-down (when selected) @ $V_{in}$ = 2.5V (sample-tested) | | | 150 | | | 150 | µA |
| $I_{BATT}$(1) | Battery supply current | Note (2) | | | Note (2) | | | nA |
| $I_{CCAUXTX}$ | Operating AVCCAUXTX supply current | | 115 | | | 60 | 105 | mA |
| $I_{CCAUXRX}$ | Operating AVCCAUXRX supply current | | 85 | | | 35 | 75 | mA |
| $I_{TTX}$ | Operating $I_{TTX}$ supply current when transmitter is AC-coupled | | 55 | | | 30 | | mA |
| | Operating $I_{TTX}$ supply current when transmitter is DC-coupled | N/A | N/A | N/A | | 15 | | mA |
| $I_{TRX}$ | Operating $I_{TRX}$ supply current when receiver is AC-coupled | | 15 | | | 0 | | mA |
| | Operating $I_{TRX}$ supply current when receiver is DC-coupled | N/A | N/A | N/A | | 15 | | |
| $P_{CPU}$ | Power dissipation of PowerPC™ 405 processor block | | 0.9 | | | 0.9 | | mW/ MHz |
| $P_{RXTX}$(3) | Power dissipation of MGT @ 1.25 Gb/s per channel | N/A | N/A | N/A | | 230 | | mW |
| | Power dissipation of MGT @ 2.5 Gb/s per channel | | 290 | | | 310 | | mW |
| | Power dissipation of MGT @ 3.125 Gb/s per channel | | 310 | | | 350 | | mW |
| | Power dissipation of MGT @ 4.25 Gb/s per channel | | 450 | | N/A | N/A | N/A | mW |
| | Power dissipation of MGT @ 6.25 Gb/s per channel | | 525 | | N/A | N/A | N/A | mW |

**Notes:**
1. Characterized, not tested.
2. Battery supply current ($I_{BATT}$):

| | Device Unpowered | Device Powered | Units |
|---|---|---|---|
| 25°C: | < 50 | < 10 | nA |
| 85°C: | N/A | < 10 | nA |

3. Total dissipation of fully operational PMA and PCS combined. This power is the average power supply dissipation per MGT. The averaging was done by simultaneously turning on all eight transceivers and dividing the total power supply dissipation by eight.

*Table 4:* **Quiescent Supply Current**

| Symbol | Description | Device | Typ(1) | Max | Units |
|---|---|---|---|---|---|
| $I_{CCINTQ}$ | Quiescent $V_{CCINT}$ supply current | XC2VP2 | 20 | 300 | mA |
| | | XC2VP4 | 30 | 400 | mA |
| | | XC2VP7 | 35 | 500 | mA |
| | | XC2VP20 | 40 | 600 | mA |
| | | XC2VPX20 | 40 | 600 | mA |
| | | XC2VP30 | 50 | 800 | mA |
| | | XC2VP40 | 60 | 1050 | mA |
| | | XC2VP50 | 70 | 1250 | mA |
| | | XC2VP70 | 85 | 1700 | mA |
| | | XC2VPX70 | 85 | 1700 | mA |
| | | XC2VP100 | 100 | 2200 | mA |
| $I_{CCOQ}$ | Quiescent $V_{CCO}$ supply current | XC2VP2 | 1.0 | 8.0 | mA |
| | | XC2VP4 | 1.0 | 8.0 | mA |
| | | XC2VP7 | 1.0 | 8.0 | mA |
| | | XC2VP20 | 1.25 | 10 | mA |
| | | XC2VPX20 | 1.25 | 10 | mA |
| | | XC2VP30 | 1.25 | 10 | mA |
| | | XC2VP40 | 1.25 | 10 | mA |
| | | XC2VP50 | 1.5 | 12 | mA |
| | | XC2VP70 | 1.5 | 12 | mA |
| | | XC2VPX70 | 1.5 | 12 | mA |
| | | XC2VP100 | 1.75 | 15 | mA |
| $I_{CCAUXQ}$ | Quiescent $V_{CCAUX}$ supply current | XC2VP2 | 5 | 50 | mA |
| | | XC2VP4 | 5 | 50 | mA |
| | | XC2VP7 | 5 | 50 | mA |
| | | XC2VP20 | 10 | 75 | mA |
| | | XC2VPX20 | 10 | 75 | mA |
| | | XC2VP30 | 10 | 75 | mA |
| | | XC2VP40 | 10 | 75 | mA |
| | | XC2VP50 | 20 | 100 | mA |
| | | XC2VP70 | 20 | 100 | mA |
| | | XC2VPX70 | 20 | 100 | mA |
| | | XC2VP100 | 20 | 125 | mA |

**Notes:**
1. Typical values are specified at nominal voltage, 25° C.
2. Quiescent current parameter values are specified for Commercial Grade. For Industrial Grade values, multiply Commercial Grade values by 1.5.
3. With no output current loads, no active input pull-up resistors, all I/O pins are 3-state and floating.
4. If DCI or differential signaling is used, more accurate quiescent current estimates can be obtained by using the Power Estimator or XPOWER™.

## Power-On Power Supply Requirements

Xilinx FPGAs require a certain amount of supply current during power-on to insure proper device initialization. The actual current consumed depends on the power-on ramp rate of the power supply.

The $V_{CCINT}$ power supply must ramp on, monotonically, no faster than 200 µs and no slower than 50 ms. Ramp-on is defined as: 0 $V_{DC}$ to minimum supply voltages (see Table 2).

$V_{CCAUX}$ and $V_{CCO}$ can power on at any ramp rate. Power supplies can be turned on in any sequence.

Table 5 shows the minimum current required by Virtex-II Pro devices for proper power-on and configuration.

If the current minimums shown in Table 5 are met, the device powers on properly after all three supplies have passed through their power-on reset threshold voltages.

Once initialized and configured, use the power calculator to estimate current drain on these supplies.

For more information on $V_{CCAUX}$, $V_{CCO}$, and configuration mode, refer to Chapter 3 in the *Virtex-II Pro Platform FPGA User Guide*.

*Table 5:* **Power-On Current for Virtex-II Pro Devices**

| Symbol | Device | | | | | | | | | | | Units |
|---|---|---|---|---|---|---|---|---|---|---|---|---|
| | XC2VP2 | XC2VP4 | XC2VP7 | XC2VP20 | XC2VPX20 | XC2VP30 | XC2VP40 | XC2VP50 | XC2VP70 | XC2VPX70 | XC2VP100 | |
| $I_{CCINTMIN}$ | 500 | 500 | 500 | 600 | 600 | 800 | 1050 | 1250 | 1700 | 1700 | 2200 | mA |
| $I_{CCAUXMIN}$ | 250 | 250 | 250 | 250 | 250 | 250 | 250 | 250 | 250 | 250 | 250 | mA |
| $I_{CCOMIN}$ | 100 | 100 | 100 | 100 | 100 | 100 | 100 | 100 | 100 | 100 | 100 | mA |

**Notes:**
1. Power-on current parameter values are specified for Commercial Grade. For Industrial Grade values, multiply Commercial Grade values by 1.5.
2. $I_{CCOMIN}$ values listed here apply to the entire device (all banks).

## General Power Supply Requirements

Proper decoupling of all FPGA power supplies is essential. Consult Xilinx Application Note **XAPP623** for detailed information on power distribution system design.

$V_{CCAUX}$ powers critical resources in the FPGA. Therefore, this supply voltage is especially susceptible to power supply noise. $V_{CCAUX}$ can share a power plane with $V_{CCO}$, but only if $V_{CCO}$ does not have excessive noise. Staying within simultaneously switching output (SSO) limits is essential for keeping power supply noise to a minimum. Refer to **XAPP689**, "Managing Ground Bounce in Large FPGAs," to determine the number of simultaneously switching outputs allowed per bank at the package level.

Changes in $V_{CCAUX}$ voltage beyond 200 mV peak-to-peak should take place at a rate no faster than 10 mV per millisecond.

Recommended practices that can help reduce jitter and period distortion are described in Xilinx Answer Record 13756.

## SelectIO-Ultra DC Input and Output Levels

Values for $V_{IL}$ and $V_{IH}$ are recommended input voltages. Values for $I_{OL}$ and $I_{OH}$ are guaranteed over the recommended operating conditions at the $V_{OL}$ and $V_{OH}$ test points. Only selected standards are tested. These are chosen to ensure that all standards meet their specifications. The selected standards are tested at minimum $V_{CCO}$ with the respective $V_{OL}$ and $V_{OH}$ voltage levels shown. Other standards are sample tested.

*Table 6:* **DC Input and Output Levels**

| IOSTANDARD Attribute | $V_{IL}$ | | $V_{IH}$ | | $V_{OL}$ | $V_{OH}$ | $I_{OL}$ | $I_{OH}$ |
|---|---|---|---|---|---|---|---|---|
| | V, min | V, max | V, min | V, max | V, max | V, min | mA | mA |
| LVTTL | –0.2 | 0.8 | 2.0 | 3.45 | 0.4 | 2.4 | 24 | –24 |
| LVCMOS33 | –0.2 | 0.8 | 2.0 | 3.45 | 0.4 | $V_{CCO}$ – 0.4 | 24 | –24 |
| LVCMOS25 | –0.2 | 0.7 | 1.7 | $V_{CCO}$ + 0.4 | 0.4 | $V_{CCO}$ – 0.4 | 24 | –24 |
| LVCMOS18 | –0.2 | 30% $V_{CCO}$ | 70% $V_{CCO}$ | $V_{CCO}$ + 0.4 | 0.4 | $V_{CCO}$ – 0.45 | 16 | –16 |
| LVCMOS15 | –0.2 | 30% $V_{CCO}$ | 70% $V_{CCO}$ | $V_{CCO}$ + 0.4 | 0.4 | $V_{CCO}$ – 0.45 | 16 | –16 |
| PCI33_3 | –0.2 | 30% $V_{CCO}$ | 50% $V_{CCO}$ | 3.6 | 10% $V_{CCO}$ | 90% $V_{CCO}$ | | |
| PCI66_3 | –0.2 | 30% $V_{CCO}$ | 50% $V_{CCO}$ | 3.6 | 10% $V_{CCO}$ | 90% $V_{CCO}$ | | |
| PCIX | –0.2 | Note (1) | Note (1) | Note (1) | Note (1) | Note (1) | Note (1) | Note (1) |
| GTLP | –0.2 | $V_{REF}$ – 0.1 | $V_{REF}$ + 0.1 | $V_{CCO}$ + 0.4 | 0.6 | n/a | 36 | n/a |
| GTL | –0.2 | $V_{REF}$ – 0.05 | $V_{REF}$ + 0.05 | $V_{CCO}$ + 0.4 | 0.4 | n/a | 40 | n/a |
| HSTL_I | –0.2 | $V_{REF}$ – 0.1 | $V_{REF}$ + 0.1 | $V_{CCO}$ + 0.4 | 0.4(2) | $V_{CCO}$ – 0.4 | 8(2) | –8(2) |
| HSTL_II | –0.2 | $V_{REF}$ – 0.1 | $V_{REF}$ + 0.1 | $V_{CCO}$ + 0.4 | 0.4(2) | $V_{CCO}$ – 0.4 | 16(2) | –16(2) |
| HSTL_III | –0.2 | $V_{REF}$ – 0.1 | $V_{REF}$ + 0.1 | $V_{CCO}$ + 0.4 | 0.4(2) | $V_{CCO}$ – 0.4 | 24(2) | –8(2) |
| HSTL_IV | –0.2 | $V_{REF}$ – 0.1 | $V_{REF}$ + 0.1 | $V_{CCO}$ + 0.4 | 0.4(2) | $V_{CCO}$ – 0.4 | 48(2) | –8(2) |
| SSTL2_I | –0.2 | $V_{REF}$ – 0.15 | $V_{REF}$ + 0.15 | $V_{CCO}$ + 0.3 | $V_{TT}$ – 0.61 | $V_{TT}$ + 0.61 | 8.1 | –8.1 |
| SSTL2_II | –0.2 | $V_{REF}$ – 0.15 | $V_{REF}$ + 0.15 | $V_{CCO}$ + 0.3 | $V_{TT}$ – 0.81 | $V_{TT}$ + 0.81 | 16.2 | –16.2 |
| SSTL18_I | –0.2 | $V_{REF}$ – 0.125 | $V_{REF}$ + 0.125 | $V_{CCO}$ + 0.3 | $V_{TT}$ – 0.61 | $V_{TT}$ + 0.61 | 6.7 | –6.7 |
| SSTL18_II | –0.2 | $V_{REF}$ – 0.125 | $V_{REF}$ + 0.125 | $V_{CCO}$ + 0.3 | $V_{TT}$ – 0.61 | $V_{TT}$ + 0.61 | 13.4 | –13.4 |

**Notes:**
1. Tested according to relevant specifications.
2. This applies to 1.5V and 1.8V HSTL.

## LDT DC Specifications (LDT_25)

*Table 7:* **LDT DC Specifications**

| DC Parameter | Symbol | Conditions | Min | Typ | Max | Units |
|---|---|---|---|---|---|---|
| Supply Voltage | $V_{CCO}$ | | 2.38 | 2.5 | 2.63 | V |
| Differential Output Voltage | $V_{OD}$ | $R_T$ = 100 ohm across Q and $\overline{Q}$ signals | 495 | 600 | 715 | mV |
| Change in $V_{OD}$ Magnitude | $\Delta V_{OD}$ | | –15 | | 15 | mV |
| Output Common Mode Voltage | $V_{OCM}$ | $R_T$ = 100 ohm across Q and $\overline{Q}$ signals | 495 | 600 | 715 | mV |
| Change in $V_{OS}$ Magnitude | $\Delta V_{OCM}$ | | –15 | | 15 | mV |
| Input Differential Voltage | $V_{ID}$ | | 200 | 600 | 1000 | mV |
| Change in $V_{ID}$ Magnitude | $\Delta V_{ID}$ | | –15 | | 15 | mV |
| Input Common Mode Voltage | $V_{ICM}$ | | 440 | 600 | 780 | mV |
| Change in $V_{ICM}$ Magnitude | $\Delta V_{ICM}$ | | –15 | | 15 | mV |

## LVDS DC Specifications (LVDS_25)

*Table 8:* **LVDS DC Specifications**

| DC Parameter | Symbol | Conditions | Min | Typ | Max | Units |
|---|---|---|---|---|---|---|
| Supply Voltage | $V_{CCO}$ | | 2.38 | 2.5 | 2.63 | V |
| Output High Voltage for Q and $\overline{Q}$ | $V_{OH}$ | $R_T$ = 100 Ω across Q and $\overline{Q}$ signals | | | 1.602 | V |
| Output Low Voltage for Q and $\overline{Q}$ | $V_{OL}$ | $R_T$ = 100 Ω across Q and $\overline{Q}$ signals | 0.898 | | | V |
| Differential Output Voltage (Q – $\overline{Q}$), Q = High ($\overline{Q}$ – Q), $\overline{Q}$ = High | $V_{ODIFF}$ | $R_T$ = 100 Ω across Q and $\overline{Q}$ signals | 247 | 350 | 454 | mV |
| Output Common-Mode Voltage | $V_{OCM}$ | $R_T$ = 100 Ω across Q and $\overline{Q}$ signals | 1.125 | 1.250 | 1.375 | V |
| Differential Input Voltage (Q – $\overline{Q}$), Q = High ($\overline{Q}$ – Q), $\overline{Q}$ = High | $V_{IDIFF}$ | Common-mode input voltage = 1.25V | 100 | 350 | 600 | mV |
| Input Common-Mode Voltage | $V_{ICM}$ | Differential input voltage = ±350 mV | 0.3 | 1.2 | 2.2 | V |

## Extended LVDS DC Specifications (LVDSEXT_25)

*Table 9:* **Extended LVDS DC Specifications**

| DC Parameter | Symbol | Conditions | Min | Typ | Max | Units |
|---|---|---|---|---|---|---|
| Supply Voltage | $V_{CCO}$ | | 2.38 | 2.5 | 2.63 | V |
| Output High Voltage for Q and $\overline{Q}$ | $V_{OH}$ | $R_T$ = 100 Ω across Q and $\overline{Q}$ signals | | | 1.785 | V |
| Output Low Voltage for Q and $\overline{Q}$ | $V_{OL}$ | $R_T$ = 100 Ω across Q and $\overline{Q}$ signals | 0.715 | | | V |
| Differential Output Voltage (Q – $\overline{Q}$), Q = High ($\overline{Q}$ – Q), $\overline{Q}$ = High | $V_{ODIFF}$ | $R_T$ = 100 Ω across Q and $\overline{Q}$ signals | 440 | | 820 | mV |
| Output Common-Mode Voltage | $V_{OCM}$ | $R_T$ = 100 Ω across Q and $\overline{Q}$ signals | 1.125 | 1.250 | 1.375 | V |
| Differential Input Voltage (Q – $\overline{Q}$), Q = High ($\overline{Q}$ – Q), $\overline{Q}$ = High | $V_{IDIFF}$ | Common-mode input voltage = 1.25V | 100 | | 1000 | mV |
| Input Common-Mode Voltage | $V_{ICM}$ | Differential input voltage = ±350 mV | 0.3 | 1.2 | 2.2 | V |

## LVPECL DC Specifications (LVPECL_25)

These values are valid when driving a 100 Ω differential load only, i.e., a 100 Ω resistor between the two receiver pins. The $V_{OH}$ levels are 200 mV below standard LVPECL levels and are compatible with devices tolerant of lower common-mode ranges. Table 10 summarizes the DC output specifications of LVPECL. For more information on using LVPECL, see the *Virtex-II Pro Platform FPGA User Guide*.

*Table 10:* **LVPECL DC Specifications**

| DC Parameter | $V_{CCO}$ = 2.375V | | $V_{CCO}$ = 2.5V | | $V_{CCO}$ = 2.625V | | Units |
|---|---|---|---|---|---|---|---|
| | Min | Max | Min | Max | Min | Max | |
| $V_{OH}$ | 1.35 | 1.495 | 1.475 | 1.62 | 1.6 | 1.745 | V |
| $V_{OL}$ | 0.565 | 0.755 | 0.69 | 0.88 | 0.815 | 1.005 | V |
| $V_{IH}$ | 0.8 | 2.0 | 0.8 | 2.0 | 0.8 | 2.0 | V |
| $V_{IL}$ | 0.5 | 1.7 | 0.5 | 1.7 | 0.5 | 1.7 | V |
| Differential Input Voltage | 0.100 | 1.5 | 0.100 | 1.5 | 0.100 | 1.5 | V |

## RocketIO DC Input and Output Levels

*Table 11:* **RocketIO X Input/Output Voltage Specifications**

| Parameter | Symbol | Conditions | Min | Typ | Max | Units |
|---|---|---|---|---|---|---|
| Peak-to-Peak Differential Input Voltage(1) | $DV_{IN}$ | | 250 | | 2000 | mV |
| Single-Ended Output Voltage Swing(2,3) | $DV_{OUT}$ | | 0 | 400 | 900 | mV |
| Peak-to-Peak Differential Output Voltage(2,3) | $DV_{PPOUT}$ | | 0 | 800 | 1800 | mV |

**Notes:**
1. See Table 24, page 15, for minimum eye sensitivity.
2. Output swing levels are selectable using TXDOWNLEVEL attribute. Refer to the ***RocketIO X Transceiver User Guide*** for details.
3. Output preemphasis levels are selectable using the TXEMPHLEVEL attribute. Refer to the ***RocketIO X Transceiver User Guide*** for details.

*Table 12:* **RocketIO Input/Output Voltage Specifications**

| Parameter | Symbol | Conditions | Min | Typ | Max | Units |
|---|---|---|---|---|---|---|
| Peak-to-Peak Differential Input Voltage | $DV_{IN}$ | | 175 | | 2000 | mV |
| Differential Input Impedance | $DIMP_{IN}$ | TERMINATION_IMP = 50 | 90 | | 125 | Ω |
| | | TERMINATION_IMP = 75 | 135 | | 187.5 | Ω |
| Single-Ended Output Voltage Swing(1,2) | $DV_{OUT}$ | | 400 | | 800 | mV |
| Peak-to-Peak Differential Output Voltage(1,2) | $DV_{PPOUT}$ | | 800 | 800 | 1600 | mV |

**Notes:**
1. Output swing levels are selectable using TX_DIFF_CTRL attribute. Refer to the ***RocketIO Transceiver User Guide*** for details.
2. Output preemphasis levels are selectable at 10% (default), 20%, 25%, and 33% using the TX_PREEMPHASIS attribute. Refer to the ***RocketIO Transceiver User Guide*** for details.

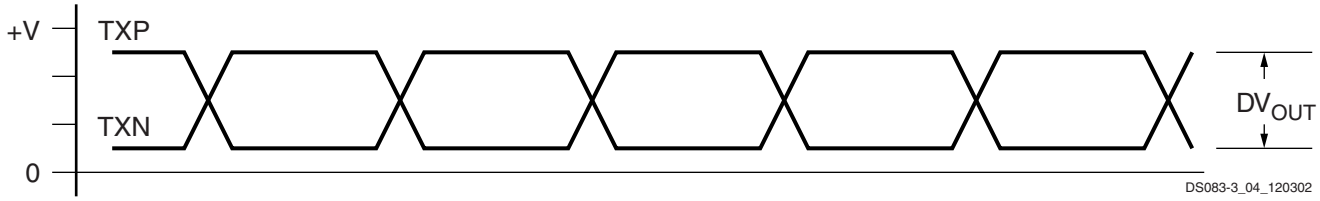


*Figure 1:* **Single-Ended Output Voltage Swing**

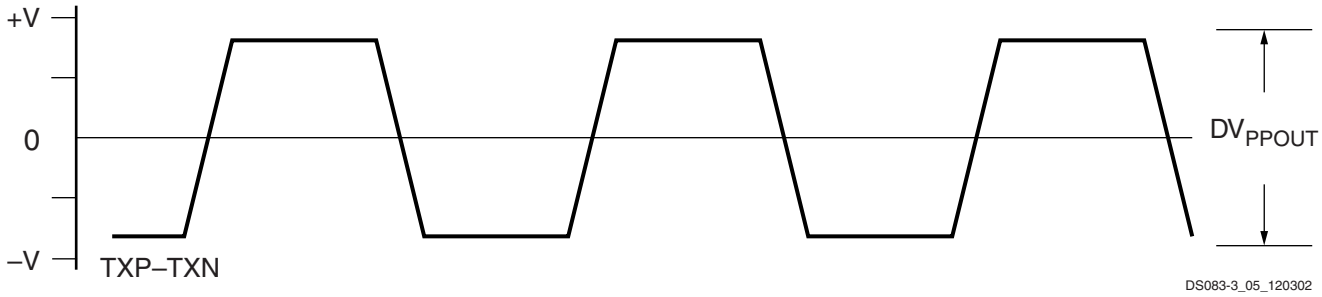


*Figure 2:* **Peak-to-Peak Differential Output Voltage**

## Virtex-II Pro Performance Characteristics

This section provides the performance characteristics of some common functions and designs implemented in Virtex-II Pro devices. The numbers reported here are fully characterized worst-case values. Note that these values are subject to the same guidelines as Virtex-II Pro Switching Characteristics (speed files).

Table 13 provides pin-to-pin values (in nanoseconds) including IOB delays; that is, delay through the device from input pin to output pin. In the case of multiple inputs and outputs, the worst delay is reported.

*Table 13:* **Pin-to-Pin Performance**

| Description | Device Used & Speed Grade | Pin-to-Pin Performance (with I/O Delays) | Units |
|---|---|---|---|
| **Basic Functions:** | | | |
| 16-bit Address Decoder | XC2VP20FF1152-6 | 7.20 | ns |
| 32-bit Address Decoder | XC2VP20FF1152-6 | 8.08 | ns |
| 64-bit Address Decoder | XC2VP20FF1152-6 | 8.15 | ns |
| 4:1 MUX | XC2VP20FF1152-6 | 3.85 | ns |
| 8:1 MUX | XC2VP20FF1152-6 | 7.24 | ns |
| 16:1 MUX | XC2VP20FF1152-6 | 7.30 | ns |
| 32:1 MUX | XC2VP20FF1152-6 | 7.64 | ns |
| Combinatorial (pad to LUT to pad) | XC2VP20FF1152-6 | 3.26 | ns |
| **Memory:** | | | |
| **Block RAM** | | | |
| Pad to setup | XC2VP20FF1152-6 | 1.72 | ns |
| Clock to Pad | XC2VP20FF1152-6 | 6.63 | ns |
| **Distributed RAM** | | | |
| Pad to setup | XC2VP20FF1152-6 | 1.78 | ns |
| Clock to Pad | XC2VP20FF1152-6 | 4.12 | ns |

Table 14 shows internal (register-to-register) performance. Values are reported in MHz.

*Table 14:* **Register-to-Register Performance**

| Description | Device Used & Speed Grade | Register-to-Register Performance | Units |
|---|---|---|---|
| **Basic Functions:** | | | |
| 16-bit Address Decoder | XC2VP20FF1152-6 | 547 | MHz |
| 32-bit Address Decoder | XC2VP20FF1152-6 | 392 | MHz |
| 64-bit Address Decoder | XC2VP20FF1152-6 | 310 | MHz |
| 4:1 MUX | XC2VP20FF1152-6 | 710 | MHz |
| 8:1 MUX | XC2VP20FF1152-6 | 609 | MHz |
| 16:1 MUX | XC2VP20FF1152-6 | 472 | MHz |
| 32:1 MUX | XC2VP20FF1152-6 | 400 | MHz |
| Register to LUT to Register | XC2VP20FF1152-6 | 1046 | MHz |
| 8-bit Adder | XC2VP20FF1152-6 | 337 | MHz |
| 16-bit Adder | XC2VP20FF1152-6 | 334 | MHz |
| 32-bit Adder | XC2VP20FF1152-6 | 252 | MHz |
| 64-bit Adder | XC2VP20FF1152-6 | 202 | MHz |
| 128-bit Adder | XC2VP20FF1152-6 | 131 | MHz |
| 24-bit Counter | XC2VP20FF1152-6 | 309 | MHz |
| 64-bit Counter | XC2VP20FF1152-6 | 207 | MHz |
| 64-bit Accumulator | XC2VP20FF1152-6 | 150 | MHz |
| Multiplier 18x18 (with Block RAM inputs) | XC2VP20FF1152-6 | 135 | MHz |
| Multiplier 18x18 (with Register inputs) | XC2VP20FF1152-6 | 147 | MHz |
| **Memory:** | | | |
| **Block RAM** | | | |
| Single-Port 4096 x 4 bits | XC2VP20FF1152-6 | 355 | MHz |
| **Distributed RAM** | | | |
| Single-Port 16 x 8-bit | XC2VP20FF1152-6 | 555 | MHz |
| Single-Port 32 x 8-bit | XC2VP20FF1152-6 | 557 | MHz |
| Single-Port 64 x 8-bit | XC2VP20FF1152-6 | 408 | MHz |
| Single-Port 128 x 8-bit | XC2VP20FF1152-6 | 336 | MHz |
| Dual-Port 16 x 8-bit | XC2VP20FF1152-6 | 549 | MHz |
| Dual-Port 32 x 8-bit | XC2VP20FF1152-6 | 460 | MHz |
| Dual-Port 64 x 8-bit | XC2VP20FF1152-6 | 407 | MHz |

## Virtex-II Pro Switching Characteristics

Switching characteristics are specified on a per-speed-grade basis and can be designated as Advance, Preliminary, or Production. Note that Virtex-II Pro Performance Characteristics are subject to these guidelines, as well. Each designation is defined as follows:

**Advance**: These speed files are based on simulations only and are typically available soon after device design specifications are frozen. Although speed grades with this designation are considered relatively stable and conservative, some under-reporting might still occur.

**Preliminary**: These speed files are based on complete ES (engineering sample) silicon characterization. Devices and speed grades with this designation are intended to give a better indication of the expected performance of production silicon. The probability of under-reporting delays is greatly reduced as compared to Advance data.

**Production**: These speed files are released once enough production silicon of a particular device family member has been characterized to provide full correlation between speed files and devices over numerous production lots. There is no under-reporting of delays, and customers receive formal notification of any subsequent changes. Typically, the slowest speed grades transition to Production before faster speed grades.

Since individual family members are produced at different times, the migration from one category to another depends completely on the status of the fabrication process for each device. Table 15 correlates the current status of each Virtex-II Pro device with a corresponding speed file designation.

All specifications are always representative of worst-case supply voltage and junction temperature conditions.

*Table 15:* **Virtex-II Pro Device Speed Grade Designations**

| Device | Speed Grade Designations | | |
|---|---|---|---|
| | Advance | Preliminary | Production |
| XC2VP2 | | | -7, -6, -5 |
| XC2VP4 | | | -7, -6, -5 |
| XC2VP7 | | | -7, -6, -5 |
| XC2VP20 | | | -7, -6, -5 |
| XC2VPX20 | | -6, -5 | |
| XC2VP30 | | | -7, -6, -5 |
| XC2VP40 | | | -7, -6, -5 |
| XC2VP50 | | | -7, -6, -5 |
| XC2VP70 | | | -7, -6, -5 |
| XC2VPX70 | | -6, -5 | |
| XC2VP100 | | | -6, -5 |

### Testing of Switching Characteristics

All devices are 100% functionally tested. Internal timing parameters are derived from measuring internal test patterns. Listed below are representative values. For more specific, more precise, and worst-case guaranteed data, use the values reported by the static timing analyzer (TRCE in the Xilinx Development System) and back-annotate to the simulation net list. Unless otherwise noted, values apply to all Virtex-II Pro devices.

### PowerPC Switching Characteristics

*Table 16:* **Processor Clocks Absolute AC Characteristics**

| | Speed Grade | | | | | | |
|---|---|---|---|---|---|---|---|
| | -7 | | -6 | | -5 | | |
| Description | Min | Max | Min | Max | Min | Max | Units |
| CPMC405CLOCK frequency | 0 | 400(1) | 0 | 350(1) | 0 | 300 | MHz |
| JTAGC405TCK frequency(2) | 0 | 200 | 0 | 175 | 0 | 150 | MHz |
| PLBCLK(3) | 0 | 400 | 0 | 350 | 0 | 300 | MHz |
| BRAMDSOCMCLK(3) | 0 | 400 | 0 | 350 | 0 | 300 | MHz |
| BRAMISOCMCLK(3) | 0 | 400 | 0 | 350 | 0 | 300 | MHz |

**Notes:**

1. **IMPORTANT!** When CPMC405CLOCK runs at speeds greater than 350 MHz in -7 Commercial grade dual-processor devices, or greater than 300 MHz in -6 Industrial grade dual-processor devices, users must implement the technology presented in **XAPP755**, "PowerPC 405 Clock Macro for -7(C) and -6(I) Speed Grade Dual-Processor Devices." Refer to Table 1, Module 1 to identify dual-processor devices.
2. The theoretical maximum frequency of this clock is one-half the CPMC405CLOCK. However, the achievable maximum is dependent on the system, and will be much less.
3. The theoretical maximum frequency of these clocks is equal to the CPMC405CLOCK. However, the achievable maximum is dependent on the system. Please see ***PowerPC 405 Processor Block Reference Guide*** and **XAPP640** for more information.

*Table 17:* **Processor Block Switching Characteristics**

| | | Speed Grade | | | |
|---|---|---|---|---|---|
| **Description** | **Symbol** | **-7** | **-6** | **-5** | **Units** |
| **Setup and Hold Relative to Clock (CPMC405CLOCK)** | | | | | |
| Device Control Register Bus control inputs | $T_{PCCK_}DCR/T_{PCKC_}DCR$ | 0.38/–0.18 | 0.44/–0.20 | 0.48/–0.23 | ns, min |
| Device Control Register Bus data inputs | $T_{PDCK_}DCR/T_{PCKD_}DCR$ | 0.65/–0.01 | 0.75/–0.01 | 0.82/–0.02 | ns, min |
| Clock and Power Management control inputs | $T_{PCCK_}CPM/T_{PCKC_}CPM$ | 0.16/ 0.03 | 0.19/ 0.03 | 0.20/ 0.03 | ns, min |
| Reset control inputs | $T_{PCCK_}RST/T_{PCKC_}RST$ | 0.16/ 0.03 | 0.19/ 0.03 | 0.20/ 0.03 | ns, min |
| Debug control inputs | $T_{PCCK_}DBG/T_{PCKC_}DBG$ | 0.27/ 0.30 | 0.31/ 0.35 | 0.34/ 0.38 | ns, min |
| Trace control inputs | $T_{PCCK_}TRC/T_{PCKC_}TRC$ | 1.37/–0.41 | 1.57/–0.48 | 1.73/–0.52 | ns, min |
| External Interrupt Controller control inputs | $T_{PCCK_}EIC/T_{PCKC_}EIC$ | 0.57/–0.22 | 0.66/–0.25 | 0.72/–0.27 | ns, min |
| **Clock to Out** | | | | | |
| Device Control Register Bus control outputs | $T_{PCKCO_}DCR$ | 1.32 | 1.52 | 1.67 | ns, max |
| Device Control Register Bus address outputs | $T_{PCKAO_}DCR$ | 1.72 | 1.98 | 2.17 | ns, max |
| Device Control Register Bus data outputs | $T_{PCKDO_}DCR$ | 1.76 | 2.02 | 2.22 | ns, max |
| Clock and Power Management control outputs | $T_{PCKCO_}CPM$ | 1.26 | 1.45 | 1.59 | ns, max |
| Reset control outputs | $T_{PCKCO_}RST$ | 1.32 | 1.51 | 1.66 | ns, max |
| Debug control outputs | $T_{PCKCO_}DBG$ | 1.94 | 2.22 | 2.44 | ns, max |
| Trace control outputs | $T_{PCKCO_}TRC$ | 1.35 | 1.56 | 1.71 | ns, max |
| **Clock** | | | | | |
| CPMC405CLOCK minimum pulse width, high | $T_{CPWH}$ | 1.25 | 1.42 | 1.66 | ns, min |
| CPMC405CLOCK minimum pulse width, low | $T_{CPWL}$ | 1.25 | 1.42 | 1.66 | ns, min |

*Table 18:* **Processor Block PLB Switching Characteristics**

| | | Speed Grade | | | |
|---|---|---|---|---|---|
| **Description** | **Symbol** | **-7** | **-6** | **-5** | **Units** |
| **Setup and Hold Relative to Clock (PLBCLK)** | | | | | |
| Processor Local Bus(ICU/DCU) control inputs | $T_{PCCK_}PLB/T_{PCKC_}PLB$ | 0.98/ 0.18 | 1.12/ 0.21 | 1.23/ 0.23 | ns, min |
| Processor Local Bus (ICU/DCU) data inputs | $T_{PDCK_}PLB/T_{PCKD_}PLB$ | 0.62/ 0.16 | 0.71/ 0.18 | 0.78/ 0.20 | ns, min |
| **Clock to Out** | | | | | |
| Processor Local Bus(ICU/DCU) control outputs | $T_{PCKCO_}PLB$ | 1.34 | 1.54 | 1.69 | ns, max |
| Processor Local Bus(ICU/DCU) address bus outputs | $T_{PCKAO_}PLB$ | 1.16 | 1.34 | 1.47 | ns, max |
| Processor Local Bus(ICU/DCU) data bus outputs | $T_{PCKDO_}PLB$ | 1.44 | 1.65 | 1.81 | ns, max |

*Table 19:* **Processor Block JTAG Switching Characteristics**

| | | Speed Grade | | | |
|---|---|---|---|---|---|
| **Description** | **Symbol** | **-7** | **-6** | **-5** | **Units** |
| **Setup and Hold Relative to Clock (JTAGC405TCK)** | | | | | |
| JTAG control inputs | $T_{PCCK_}$JTAG/ $T_{PCKC_}$JTAG | 0.80/ 0.70 | 0.80/ 0.70 | 0.88/ 0.77 | ns, min |
| JTAG reset input | $T_{PCCK_}$JTAGRST/ $T_{PCKC_}$JTAGRST | 0.80/ 0.70 | 0.80/ 0.70 | 0.88/ 0.77 | ns, min |
| **Clock to Out** | | | | | |
| JTAG control outputs | $T_{PCKCO_}$JTAG | 1.34 | 1.54 | 1.69 | ns, max |

*Table 20:* **PowerPC 405 Data-Side On-Chip Memory Switching Characteristics**

| | | Speed Grade | | | |
|---|---|---|---|---|---|
| **Description** | **Symbol** | **-7** | **-6** | **-5** | **Units** |
| **Setup and Hold Relative to Clock (BRAMDSOCMCLK)** | | | | | |
| Data-Side On-Chip Memory data bus inputs | $T_{PDCK_}$DSOCM/ $T_{PCKD_}$DSOCM | 0.73/ 0.83 | 0.84/ 0.95 | 0.92/ 1.05 | ns, min |
| **Clock to Out** | | | | | |
| Data-Side On-Chip Memory control outputs | $T_{PCKCO_}$DSOCM | 1.58 | 1.82 | 1.99 | ns, max |
| Data-Side On-Chip Memory address bus outputs | $T_{PCKAO_}$DSOCM | 1.46 | 1.68 | 1.84 | ns, max |
| Data-Side On-Chip Memory data bus outputs | $T_{PCKDO_}$DSOCM | 0.90 | 1.03 | 1.13 | ns, max |

*Table 21:* **PowerPC 405 Instruction-Side On-Chip Memory Switching Characteristics**

| | | Speed Grade | | | |
|---|---|---|---|---|---|
| **Description** | **Symbol** | **-7** | **-6** | **-5** | **Units** |
| **Setup and Hold Relative to Clock (BRAMISOCMCLK)** | | | | | |
| Instruction-Side On-Chip Memory data bus inputs | $T_{PDCK_}$ISOCM/ $T_{PCKD_}$ISOCM | 0.81/ 0.68 | 0.93/ 0.78 | 1.02/ 0.86 | ns, min |
| **Clock to Out** | | | | | |
| Instruction-Side On-Chip Memory control outputs | $T_{PCKCO_}$ISOCM | 1.33 | 1.53 | 1.68 | ns, max |
| Instruction-Side On-Chip Memory address bus outputs | $T_{PCKAO_}$ISOCM | 1.52 | 1.75 | 1.92 | ns, max |
| Instruction-Side On-Chip Memory data bus outputs | $T_{PCKDO_}$ISOCM | 1.35 | 1.55 | 1.70 | ns, max |

## RocketIO Switching Characteristics

*Table 22:* **RocketIO X Reference Clock Switching Characteristics**

| | | | All Speed Grades | | | |
|---|---|---|---|---|---|---|
| **Description** | **Symbol** | **Conditions** | **Min** | **Typ** | **Max** | **Units** |
| Reference Clock frequency range(1) | $F_{GCLK}$ | | 62.5 | | 425 | MHz |
| Reference Clock frequency tolerance | $F_{GTOL}$ | | | | ±350 | ppm |
| Reference Clock rise time | $T_{RCLK}$ | 20% – 80% | | 75 | | ps |
| Reference Clock fall time | $T_{FCLK}$ | 20% – 80% | | 75 | | ps |
| Reference Clock duty cycle | $T_{DCREF}$ | | 45 | 50 | 55 | % |
| Reference Clock total jitter, peak-peak | $T_{GJTT}$ | 3.125 Gb/s – 6.25 Gb/s | | | 30 | ps |
| | | 2.488 Gb/s – 3.125 Gb/s | | | 40 | ps |
| Clock recovery frequency acquisition time, from Power-up to High state of PMARXLOCK | $T_{LOCK}$ | | | 100 | | µs |
| Clock recovery phase acquisition time, from Data to High state of PMARXLOCK | $T_{PHASE}$ | | | 40 | 60 | µs |

**Notes:**
1. BREFCLK should be used for all serial bit rates up to the maximum shown.

*Table 23:* **RocketIO Reference Clock Switching Characteristics**

| | | | All Speed Grades | | | |
|---|---|---|---|---|---|---|
| **Description** | **Symbol** | **Conditions** | **Min** | **Typ** | **Max** | **Units** |
| Reference Clock frequency range(1) | $F_{GCLK}$ | Full rate operation | 50 | | 156.25 | MHz |
| | | Half rate operation(2) (2X oversampling) | 60 | | 100 | MHz |
| Reference Clock frequency tolerance | $F_{GTOL}$ | | | | ±100 | ppm |
| Reference Clock rise time | $T_{RCLK}$ | 20% – 80% | | 600 | 1000 | ps |
| Reference Clock fall time | $T_{FCLK}$ | 20% – 80% | | 600 | 1000 | ps |
| Reference Clock duty cycle | $T_{DCREF}$ | | 45 | 50 | 55 | % |
| Reference Clock total jitter, peak-peak(3) | $T_{GJTT}$ | 2.501 Gb/s – 3.125 Gb/s | | | 40 | ps |
| | | 1.061 Gb/s – 2.5 Gb/s | | | 50 | ps |
| | | < 1.06 Gb/s | | | 120 | ps |
| Clock recovery frequency acquisition time | $T_{LOCK}$ | | | | 10 | µs |
| Clock recovery phase acquisition time | $T_{PHASE}$ | | | 960 | | bits(4) |

**Notes:**
1. BREFCLK/BREFCLK2 can be used for all serial bit rates up to the maximum shown. REFCLK/REFCLK2 can be used for serial bit rates up to 2.5 Gb/s (REFCLK = 125 MHz). All other parameters apply equally to REFCLK, REFCLK2, BREFCLK, and BREFCLK2 except as noted.
2. For serial rates under 1 Gb/s, the 3X (or greater) oversampling techniques described in **XAPP572** are required to meet the transmit jitter and receive jitter tolerance specifications defined in this data sheet.
3. Measured at the package pin. For reference clock frequencies equal to or above 125 MHz, BREFCLK/BREFCLK2 must be used.
4. 8B/10B-type bitstream.

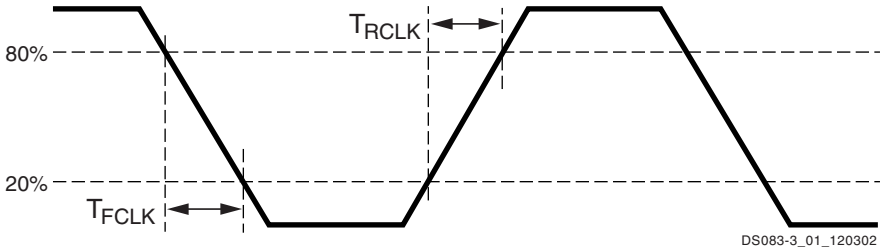


*Figure 3:* **Reference Clock Timing Parameters**

*Table 24:* **RocketIO X Receiver Switching Characteristics**(1)

| Description | Symbol | Conditions | Min | Typ | Max | Units |
|---|---|---|---|---|---|---|
| Receive total jitter tolerance using default equalization and PRBS-15 pattern | $T_{JTOL}$ | 2.488 Gb/s | | 0.80 | 0.65 | UI(2) |
| | | 3.125 Gb/s | | 0.80 | 0.65 | UI |
| | | 4.25 Gb/s | | 0.80 | 0.65 | UI |
| | | 6.25 Gb/s | | 0.80 | 0.65 | UI |
| Receive random jitter tolerance | $T_{RJTOL}$ | 2.488 Gb/s | | 0.30 | | UI |
| | | 3.125 Gb/s | | 0.30 | | UI |
| | | 4.25 Gb/s | | 0.30 | | UI |
| | | 6.25 Gb/s | | 0.30 | | UI |
| Receive sinusoidal jitter tolerance measured at 70 MHz | $T_{SJTOL}$ | 2.488 Gb/s | | 0.30 | 0.15 | UI |
| | | 3.125 Gb/s | | 0.30 | 0.15 | UI |
| | | 4.25 Gb/s | | 0.30 | 0.15 | UI |
| | | 6.25 Gb/s | | 0.30 | 0.15 | UI |
| Receive deterministic jitter tolerance | $T_{DJTOL}$ | 2.488 Gb/s | | 0.55 | 0.45 | UI |
| | | 3.125 Gb/s | | 0.55 | 0.45 | UI |
| | | 4.25 Gb/s | | 0.55 | 0.45 | UI |
| | | 6.25 Gb/s | | 0.50 | 0.45 | UI |
| Receive latency(3) | $T_{RXLAT}$ | | | 25 | 34(4) | RXUSRCLK cycles |
| RXUSRCLK duty cycle | $T_{RXDC}$ | | 45 | 50 | 55 | % |
| RXUSRCLK2 duty cycle | $T_{RX2DC}$ | | 45 | 50 | 55 | % |
| Differential receive input sensitivity | $V_{EYE}$ | | | 120 | 250 | mV |

**Notes:**
1. The XC2VPX70 operates at a fixed 4.25 Gb/s baud rate.
2. UI = Unit Interval
3. Receive latency delay RXP/RXN to RXDATA. Refer to ***RocketIO X Transceiver User Guide*** for more information on calculating latency.
4. This maximum may occur when certain conditions are present and clock correction and channel bonding are enabled. If these functions are both disabled, the maximum will be near the typical values.

*Table 25:* **RocketIO Receiver Switching Characteristics**

| Description | Symbol | Conditions | Min | Typ | Max | Units |
|---|---|---|---|---|---|---|
| Receive total jitter tolerance | $T_{JTOL}$ | 2.126 Gb/s – 3.125 Gb/s | | | 0.65 | UI(1) |
| | | 1.0626 Gb/s – 2.125 Gb/s | | | 0.65 | UI |
| | | 1.0 Gb/s – 1.0625 Gb/s | | | 0.68 | UI |
| | | 600 Mb/s – 999 Mb/s | | | 0.68(2) | UI |
| Receive deterministic jitter tolerance | $T_{DJTOL}$ | 2.126 Gb/s – 3.125 Gb/s | | | 0.41 | UI |
| | | 1.0626 Gb/s – 2.125 Gb/s | | | 0.43 | UI |
| | | 1.0 Gb/s – 1.0625 Gb/s | | | 0.47 | UI |
| | | 600 Mb/s – 999 Mb/s | | | 0.47(2) | |
| Receive latency(3) | $T_{RXLAT}$ | | | 25 | 42(4) | RXUSRCLK cycles |
| RXUSRCLK duty cycle | $T_{RXDC}$ | | 45 | 50 | 55 | % |
| RXUSRCLK2 duty cycle | $T_{RX2DC}$ | | 45 | 50 | 55 | % |

**Notes:**
1. UI = Unit Interval
2. The oversampling techniques described in **XAPP572** are required to meet these specifications for serial rates less than 1 Gb/s.
3. Receive latency delay RXP/RXN to RXDATA. Refer to ***RocketIO Transceiver User Guide*** for more information on calculating latency.
4. This maximum may occur when certain conditions are present and clock correction and channel bonding are enabled. If these functions are both disabled, the maximum will be near the typical values.

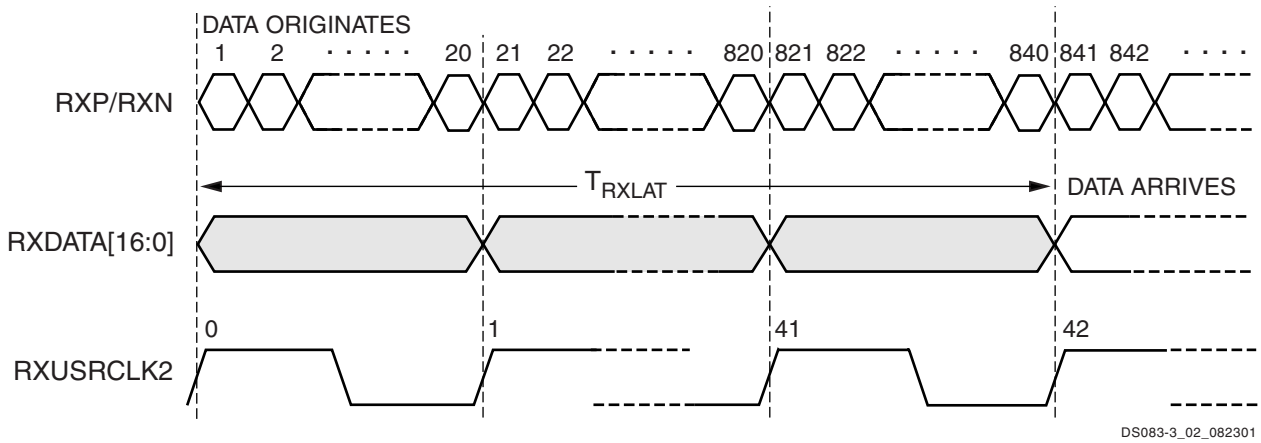


*Figure 4:* **RocketIO Receive Latency (Maximum)**

*Table 26:* **RocketIO X Transmitter Switching Characteristics**(1)

| Description | Symbol | Conditions | BREFCLK Frequency | Min | Typ | Max | Units |
|---|---|---|---|---|---|---|---|
| Serial data rate | $F_{GTX}$ | | | 2.488 | | 6.25 | Gb/s |
| Serial data output total jitter (p-p)(3) | $T_{TJ}$ | 2.488 Gb/s | | | 0.15 | 0.20 | UI(2) |
| | | 3.125 Gb/s | | | 0.14 | 0.19 | UI |
| | | 4.25 Gb/s | | | 0.39 | 0.48 | UI |
| | | 6.25 Gb/s | | | 0.42 | 0.54 | UI |
| Serial data output deterministic jitter (p-p)(3) | $T_{DJ}$ | 2.488 Gb/s | 155.52 MHz | | 0.03 | 0.17 | UI |
| | | 3.125 Gb/s | 156.25 MHz | | 0.03 | 0.17 | UI |
| | | 4.25 Gb/s | 212.5 MHz | | 0.14 | 0.26 | UI |
| | | 6.25 Gb/s | 312.5 MHz | | 0.17 | 0.35 | UI |
| Serial data output random jitter (p-p)(3,4) | $T_{RJ}$ | 2.488 Gb/s | 155.52 MHz | | 0.12 | 0.18 | UI |
| | | 3.125 Gb/s | 156.25 MHz | | 0.12 | 0.20 | UI |
| | | 4.25 Gb/s | 212.5 MHz | | 0.25 | 0.39 | UI |
| | | 6.25 Gb/s | 312.5 MHz | | 0.25 | 0.39 | UI |
| TX rise time | $T_{RTX}$ | 20% – 80% @ 2.500 Gb/s | | | 60 | | ps |
| TX fall time | $T_{FTX}$ | | | | 60 | | ps |
| Transmit latency(5) | $T_{TXLAT}$ | | | | 14 | 19 | TXUSR CLK cycles |
| TXUSRCLK duty cycle | $T_{TXDC}$ | | | 45 | 50 | 55 | % |
| TXUSRCLK2 duty cycle | $T_{TX2DC}$ | | | 45 | 50 | 55 | % |

**Notes:**
1. The XC2VPX70 operates at a fixed 4.25 Gb/s baud rate.
2. UI = Unit Interval
3. Total Jitter $T_{TJ} = T_{DJ} + T_{RJ}$
4. $T_{RJ}$ specifications are *wideband* and include low-frequency jitter components (also referred to as *wander*).$T_{RJ}$ specified is peak-to-peak, estimated at BER=$10^{-12}$ using the Bathtub Method.
5. Transmit latency delay TXDATA to TXP/TXN. Refer to ***RocketIO X Transceiver User Guide*** for more information on calculating latency.

*Table 27:* **RocketIO Transmitter Switching Characteristics**

| Description | Symbol | Conditions | Min | Typ | Max | Units |
|---|---|---|---|---|---|---|
| Serial data rate, full-speed clock | $F_{GTX}$ | Flipchip packages | 1.0 | | 3.125(1) | Gb/s |
| | | Wirebond packages | 1.0 | | 2.5(1) | Gb/s |
| Serial data rate, half-speed clock(3) (2X oversampling) | | Flipchip packages | 0.600 | | 1.0 | Gb/s |
| | | Wirebond packages | 0.600 | | 1.0 | Gb/s |
| Serial data output deterministic jitter | $T_{DJ}$ | 2.126 Gb/s – 3.125 Gb/s | | | 0.17 | UI(2) |
| | | 1.0626 Gb/s – 2.125 Gb/s | | | 0.08 | UI |
| | | 1.0 Gb/s – 1.0625 Gb/s | | | 0.05 | UI |
| | | 600 Mb/s – 999 Mb/s | | | 0.08(4) | UI |
| Serial data output random jitter | $T_{RJ}$ | 2.126 Gb/s – 3.125 Gb/s | | | 0.18 | UI |
| | | 1.0626 Gb/s – 2.125 Gb/s | | | 0.19 | UI |
| | | 1.0 Gb/s – 1.0625 Gb/s | | | 0.18 | UI |
| | | 600 Mb/s – 999 Mb/s | | | 0.18(4) | UI |
| TX rise time | $T_{RTX}$ | 20% – 80% | | 120 | | ps |
| TX fall time | $T_{FTX}$ | | | 120 | | ps |
| Transmit latency(5) | $T_{TXLAT}$ | Including CRC | | 14 | 17 | TXUSRCLK cycles |
| | | Excluding CRC | | 8 | 11 | |
| TXUSRCLK duty cycle | $T_{TXDC}$ | | 45 | 50 | 55 | % |
| TXUSRCLK2 duty cycle | $T_{TX2DC}$ | | 45 | 50 | 55 | % |

**Notes:**
1. Serial data rate in the -5 speed grade is limited to 2.0 Gb/s in both wirebond and flipchip packages.
2. UI = Unit Interval
3. For serial rates under 1 Gb/s, the 3X (or greater) oversampling techniques described in **XAPP572** are required to meet the transmit jitter and receive jitter tolerance specifications defined in this data sheet.
4. The oversampling techniques described in **XAPP572** are required to meet these specifications for serial rates less than 1 Gb/s.
5. Transmit latency delay TXDATA to TXP/TXN. Refer to ***RocketIO Transceiver User Guide*** for more information on calculating latency.

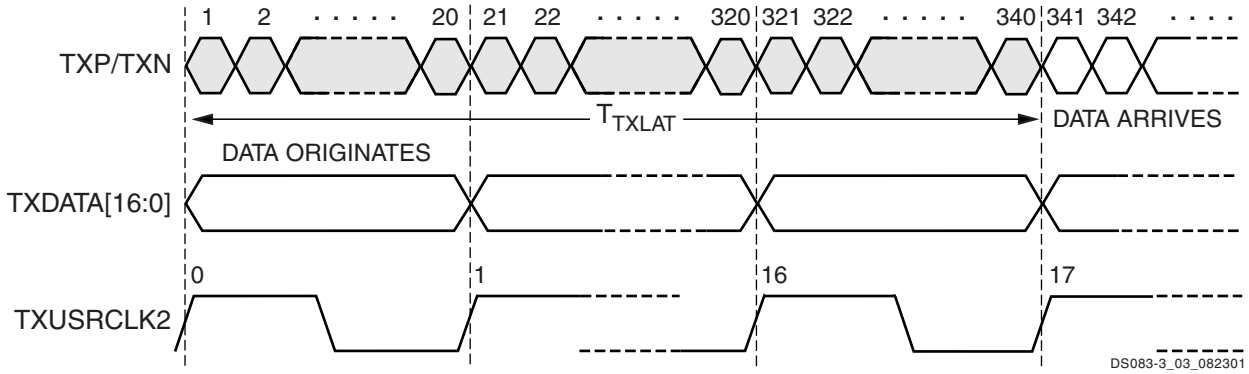


*Figure 5:* **RocketIO Transmit Latency (Maximum, Including CRC)**

*Table 28:* **RocketIO X Fabric Interface Characteristics**

| Description | Symbol | All Speed Grades | | | Units |
|---|---|---|---|---|---|
| | | Min | Typ | Max | |
| TX/RXUSRCLK frequency | $F_{TXRXUCLK}$ | 125.00 | | 212.50 | MHz |
| TX/RXUSRCLK2 frequency | $F_{TXRXUCLK2}$ | 62.50 | | 250.00 | MHz |

*Table 29:* **RocketIO X RXUSRCLK Switching Characteristics**

| Description | Symbol | Speed Grade | | | Units |
|---|---|---|---|---|---|
| | | -7 | -6 | -5 | |
| **Setup and Hold Relative to Clock (RXUSRCLK)** | | | | | |
| CHBONDI control inputs | $T_{GCCK_}$CHBI/$T_{GCKC_}$CHBI | | | | ns, min |
| **Clock to Out** | | | | | |
| CHBONDO control outputs | $T_{GCKCO_}$CHBO | | | | ns, max |
| **Clock** | | | | | |
| RXUSRCLK minimum pulse width, High | $T_{GPWH_}$RX | | | | ns, min |
| RXUSRCLK minimum pulse width, Low | $T_{GPWL_}$RX | | | | ns, min |

*Table 30:* **RocketIO RXUSRCLK Switching Characteristics**

| Description | Symbol | Speed Grade | | | Units |
|---|---|---|---|---|---|
| | | -7 | -6 | -5 | |
| **Setup and Hold Relative to Clock (RXUSRCLK)** | | | | | |
| CHBONDI control inputs | $T_{GCCK_}$CHBI/$T_{GCKC_}$CHBI | 0.00/ 0.12 | 0.00/ 0.12 | 0.00/ 0.14 | ns, min |
| **Clock to Out** | | | | | |
| CHBONDO control outputs | $T_{GCKCO_}$CHBO | 0.50 | 0.50 | 0.55 | ns, max |
| **Clock** | | | | | |
| RXUSRCLK minimum pulse width, High | $T_{GPWH_}$RX | 2.83 | 2.83 | 4.50 | ns, min |
| RXUSRCLK minimum pulse width, Low | $T_{GPWL_}$RX | 2.83 | 2.83 | 4.50 | ns, min |

*Table 31:* **RocketIO X RXUSRCLK2 Switching Characteristics**

| Description | Symbol | Speed Grade | | | Units |
|---|---|---|---|---|---|
| | | -7 | -6 | -5 | |
| **Setup and Hold Relative to Clock (RXUSRCLK2)** | | | | | |
| RXRESET control input | $T_{GCCK_}$RRST/$T_{GCKC_}$RRST | | | | ns, min |
| RXPOLARITY control input | $T_{GCCK_}$RPOL/$T_{GCKC_}$RPOL | | | | ns, min |
| ENCHANSYNC control input | $T_{GCCK_}$ECSY/$T_{GCKC_}$ECSY | | | | ns, min |
| RXBLOCKSYNC64B66EUSE control input | $T_{GCCK_}$BLKSNC/$T_{GCKC_}$BLKSNC | | | | ns, min |
| RXCOMMADETUSE control input | $T_{GCCK_}$CMDT/$T_{GCCK_}$CMDT | | | | ns, min |
| RXIGNOREBTF control input | $T_{GCCK_}$IBTF/$T_{GCCK_}$IBTF | | | | ns, min |
| RXDATAWIDTH control input | $T_{GCCK_}$RDATW/$T_{GCCK_}$RDATW | | | | ns, min |

*Table 31:* **RocketIO X RXUSRCLK2 Switching Characteristics *(Continued)***

| | | Speed Grade | | | |
|---|---|---|---|---|---|
| **Description** | **Symbol** | **-7** | **-6** | **-5** | **Units** |
| RXDEC64B66BUSE RXDEC8B10BUSE control input | $T_{GCCK_}RDEC/T_{GCCK_}RDEC$ | | | | ns, min |
| RXDESCRAM64B66BUSE control input | $T_{GCCK_}RDES/T_{GCCK_}RDES$ | | | | ns, min |
| RXINTDATAWIDTH control input | $T_{GCCK_}RIDATW/T_{GCCK_}RIDATW$ | | | | ns, min |
| RXSLIDE control input | $T_{GCCK_}RXSLIDE/T_{GCCK_}RXSLIDE$ | | | | ns, min |
| **Clock to Out** | | | | | |
| PMARXLOCK status output | $T_{GCKST_}PLCK$ | | | | ns, max |
| RXNOTINTABLE status outputs | $T_{GCKST_}RNIT$ | | | | ns, max |
| RXDISPERR status outputs | $T_{GCKST_}RDERR$ | | | | ns, max |
| RXCHARISCOMMA status outputs | $T_{GCKST_}RCMCH$ | | | | ns, max |
| RXREALIGN status output | $T_{GCKST_}ALIGN$ | | | | ns, max |
| RXCOMMADET status output | $T_{GCKST_}CMDT$ | | | | ns, max |
| RXLOSSOFSYNC status outputs | $T_{GCKST_}RLOS$ | | | | ns, max |
| RXCLKCORCNT status outputs | $T_{GCKST_}RCCCNT$ | | | | ns, max |
| RXBUFSTATUS status outputs | $T_{GCKST_}RBSTA$ | | | | ns, max |
| CHBONDDONE status output | $T_{GCKST_}CHBD$ | | | | ns, max |
| RXCHARISK status outputs | $T_{GCKST_}RKCH$ | | | | ns, max |
| RXRUNDISP status outputs | $T_{GCKST_}RRDIS$ | | | | ns, max |
| RXDATA data outputs | $T_{GCKDO_}RDAT$ | | | | ns, max |
| **Clock** | | | | | |
| RXUSRCLK2 minimum pulse width, High | $T_{RX2PWH}$ | | | | ns, min |
| RXUSRCLK2 minimum pulse width, Low | $T_{RX2PWL}$ | | | | ns, min |

*Table 32:* **RocketIO RXUSRCLK2 Switching Characteristics**

| | | Speed Grade | | | |
|---|---|---|---|---|---|
| **Description** | **Symbol** | **-7** | **-6** | **-5** | **Units** |
| **Setup and Hold Relative to Clock (RXUSRCLK2)** | | | | | |
| RXRESET control input | $T_{GCCK_}RRST/T_{GCKC_}RRST$ | 0.02/ 0.00 | 0.02/ 0.00 | 0.02/ 0.00 | ns, min |
| RXPOLARITY control input | $T_{GCCK_}RPOL/T_{GCKC_}RPOL$ | 0.02/ 0.00 | 0.02/ 0.00 | 0.02/ 0.00 | ns, min |
| ENCHANSYNC control input | $T_{GCCK_}ECSY/T_{GCKC_}ECSY$ | 0.02/ 0.00 | 0.02/ 0.00 | 0.02/ 0.00 | ns, min |
| **Clock to Out** | | | | | |
| RXNOTINTABLE status outputs | $T_{GCKST_}RNIT$ | 0.50 | 0.50 | 0.55 | ns, max |
| RXDISPERR status outputs | $T_{GCKST_}RDERR$ | 0.50 | 0.50 | 0.55 | ns, max |
| RXCHARISCOMMA status outputs | $T_{GCKST_}RCMCH$ | 0.50 | 0.50 | 0.55 | ns, max |
| RXREALIGN status output | $T_{GCKST_}ALIGN$ | 0.41 | 0.41 | 0.46 | ns, max |
| RXCOMMADET status output | $T_{GCKST_}CMDT$ | 0.41 | 0.41 | 0.46 | ns, max |
| RXLOSSOFSYNC status outputs | $T_{GCKST_}RLOS$ | 0.50 | 0.50 | 0.55 | ns, max |
| RXCLKCORCNT status outputs | $T_{GCKST_}RCCCNT$ | 0.41 | 0.41 | 0.46 | ns, max |

*Table 32:* **RocketIO RXUSRCLK2 Switching Characteristics *(Continued)***

| | | Speed Grade | | | |
|---|---|---|---|---|---|
| **Description** | **Symbol** | **-7** | **-6** | **-5** | **Units** |
| RXBUFSTATUS status outputs | $T_{GCKST_}$RBSTA | 0.45 | 0.45 | 0.50 | ns, max |
| RXCHECKINGCRC status output | $T_{GCKST_}$RCCRC | 0.36 | 0.40 | 0.44 | ns, max |
| RXCRCERR status output | $T_{GCKST_}$RCRCE | 0.36 | 0.40 | 0.44 | ns, max |
| CHBONDDONE status output | $T_{GCKST_}$CHBD | 0.50 | 0.50 | 0.55 | ns, max |
| RXCHARISK status outputs | $T_{GCKST_}$RKCH | 0.50 | 0.50 | 0.55 | ns, max |
| RXRUNDISP status outputs | $T_{GCKST_}$RRDIS | 0.50 | 0.50 | 0.55 | ns, max |
| RXDATA data outputs | $T_{GCKDO_}$RDAT | 0.50 | 0.50 | 0.55 | ns, max |
| **Clock** | | | | | |
| RXUSRCLK2 minimum pulse width, High | $T_{GPWH_}$RX2 | 1.42 | 1.42 | 2.25 | ns, min |
| RXUSRCLK2 minimum pulse width, Low | $T_{GPWL_}$RX2 | 1.42 | 1.42 | 2.25 | ns, min |

*Table 33:* **RocketIO X TXUSRCLK2 Switching Characteristics**

| | | Speed Grade | | | |
|---|---|---|---|---|---|
| **Description** | **Symbol** | **-7** | **-6** | **-5** | **Units** |
| **Setup and Hold Relative to Clock (TXUSRCLK2)** | | | | | |
| TXBYPASS8B10B control inputs | $T_{GCCK_}$TBYP/$T_{GCKC_}$TBYP | | | | ns, min |
| TXPOLARITY control input | $T_{GCCK_}$TPOL/$T_{GCKC_}$TPOL | | | | ns, min |
| TXINHIBIT control inputs | $T_{GCCK_}$TINH/$T_{GCKC_}$TINH | | | | ns, min |
| LOOPBACK control inputs | $T_{GCCK_}$LBK/$T_{GCKC_}$LBK | | | | ns, min |
| TXRESET control input | $T_{GCCK_}$TRST/$T_{GCKC_}$TRST | | | | ns, min |
| TXCHARISK control inputs | $T_{GCCK_}$TKCH/$T_{GCKC_}$TKCH | | | | ns, min |
| TXCHARDISPMODE control inputs | $T_{GCCK_}$TCDM/$T_{GCKC_}$TCDM | | | | ns, min |
| TXCHARDISPVAL control inputs | $T_{GCCK_}$TCDV/$T_{GCKC_}$TCDV | | | | ns, min |
| TXDATAWIDTH control inputs | $T_{GCCK_}$TDATW/$T_{GCCK_}$TDATW | | | | ns, min |
| TXENC64B66BUSE TXENC8B10BUSE control inputs | $T_{GCCK_}$TENC/$T_{GCCK_}$TENC | | | | ns, min |
| TXINTDATAWIDTH control inputs | $T_{GCCK_}$TIDATW/$T_{GCCK_}$TIDATW | | | | ns, min |
| TXGEARBOX64B66BUSE control inputs | $T_{GCCK_}$TXGEAR/$T_{GCCK_}$TXGEAR | | | | ns, min |
| TXSCRAM64B66BUSE control inputs | $T_{GCCK_}$TXSCBL/$T_{GCCK_}$TXSCBL | | | | ns, min |
| REFCLKSEL REFCLKBSEL control inputs | $T_{GCCK_}$RFCKSL/$T_{GCCK_}$RFCKSL | | | | ns, min |
| TXDATA data inputs | $T_{GDCK_}$TDAT/$T_{GCKD_}$TDAT | | | | ns, min |
| **Clock to Out** | | | | | |
| TXBUFERR status output | $T_{GCKST_}$TBERR | | | | ns, max |
| TXKERR status outputs | $T_{GCKST_}$TKERR | | | | ns, max |
| TXRUNDISP status outputs | $T_{GCKST_}$TRDIS | | | | ns, max |
| **Clock** | | | | | |
| TXUSRCLK2 minimum pulse width, High | $T_{GPWH_}$TX2 | | | | ns, min |
| TXUSRCLK2 minimum pulse width, Low | $T_{GPWL_}$TX2 | | | | ns, min |

*Table 34:* **RocketIO TXUSRCLK2 Switching Characteristics**

| | | Speed Grade | | | |
|---|---|---|---|---|---|
| **Description** | **Symbol** | **-7** | **-6** | **-5** | **Units** |
| **Setup and Hold Relative to Clock (TXUSRCLK2)** | | | | | |
| CONFIGENABLE control input | $T_{GCCK_}$CFGEN/$T_{GCKC_}$CFGEN | 0.35/ 0.10 | 0.35/ 0.10 | 0.39/ 0.11 | ns, min |
| TXBYPASS8B10B control inputs | $T_{GCCK_}$TBYP/$T_{GCKC_}$TBYP | 0.02/ 0.00 | 0.02/ 0.00 | 0.02/ 0.00 | ns, min |
| TXFORCECRCERR control input | $T_{GCCK_}$TCRCE/$T_{GCKC_}$TCRCE | 0.39/ 0.12 | 0.44/ 0.14 | 0.49/ 0.15 | ns, min |
| TXPOLARITY control input | $T_{GCCK_}$TPOL/$T_{GCKC_}$TPOL | 0.02/ 0.00 | 0.02/ 0.00 | 0.02/ 0.00 | ns, min |
| TXINHIBIT control inputs | $T_{GCCK_}$TINH/$T_{GCKC_}$TINH | 0.02/ 0.00 | 0.02/ 0.00 | 0.02/ 0.00 | ns, min |
| LOOPBACK control inputs | $T_{GCCK_}$LBK/$T_{GCKC_}$LBK | 0.02/ 0.00 | 0.02/ 0.00 | 0.02/ 0.00 | ns, min |
| TXRESET control input | $T_{GCCK_}$TRST/$T_{GCKC_}$TRST | 0.02/ 0.10 | 0.02/ 0.10 | 0.02/ 0.11 | ns, min |
| TXCHARISK control inputs | $T_{GCCK_}$TKCH/$T_{GCKC_}$TKCH | 0.02/ 0.00 | 0.02/ 0.00 | 0.02/ 0.00 | ns, min |
| TXCHARDISPMODE control inputs | $T_{GCCK_}$TCDM/$T_{GCKC_}$TCDM | 0.02/ 0.00 | 0.02/ 0.00 | 0.02/ 0.00 | ns, min |
| TXCHARDISPVAL control inputs | $T_{GCCK_}$TCDV/$T_{GCKC_}$TCDV | 0.02/ 0.00 | 0.02/ 0.00 | 0.02/ 0.00 | ns, min |
| CONFIGIN data input | $T_{GDCK_}$CFGIN/$T_{GCKD_}$CFGIN | 0.35/ 0.10 | 0.35/ 0.10 | 0.39/ 0.11 | ns, min |
| TXDATA data inputs | $T_{GDCK_}$TDAT/$T_{GCKD_}$TDAT | 0.02/ 0.00 | 0.02/ 0.00 | 0.02/ 0.00 | ns, min |
| **Clock to Out** | | | | | |
| TXBUFERR status output | $T_{GCKST_}$TBERR | 0.54 | 0.54 | 0.60 | ns, max |
| TXKERR status outputs | $T_{GCKST_}$TKERR | 0.41 | 0.41 | 0.46 | ns, max |
| TXRUNDISP status outputs | $T_{GCKST_}$TRDIS | 0.41 | 0.41 | 0.46 | ns, max |
| CONFIGOUT data output | $T_{GCKDO_}$CFGOUT | 0.25 | 0.25 | 0.28 | ns, max |
| **Clock** | | | | | |
| TXUSRCLK2 minimum pulse width, High | $T_{GPWH_}$TX2 | 1.42 | 1.42 | 2.25 | ns, min |
| TXUSRCLK2 minimum pulse width, Low | $T_{GPWL_}$TX2 | 1.42 | 1.42 | 2.25 | ns, min |

## IOB Input Switching Characteristics

Input delays associated with the pad are specified for LVCMOS 2.5V levels. For other standards, adjust the delays with the values shown in IOB Input Switching Characteristics Standard Adjustments.

*Table 35:* **IOB Input Switching Characteristics**

| | | | Speed Grade | | | |
|---|---|---|---|---|---|---|
| **Description** | **Symbol** | **Device** | **-7** | **-6** | **-5** | **Units** |
| **Propagation Delays** | | | | | | |
| Pad to I output, no delay | $T_{IOPI}$ | All | 0.84 | 0.87 | 0.91 | ns, max |
| Pad to I output, with delay | $T_{IOPID}$ | XC2VP2 | 1.84 | 1.94 | 2.06 | ns, max |
| | | XC2VP4 | 1.84 | 1.94 | 2.06 | ns, max |
| | | XC2VP7 | 1.84 | 1.94 | 2.06 | ns, max |
| | | XC2VP20 | 2.14 | 2.23 | 2.37 | ns, max |
| | | XC2VPX20 | 2.14 | 2.23 | 2.37 | ns, max |
| | | XC2VP30 | 2.14 | 2.26 | 2.46 | ns, max |
| | | XC2VP40 | 2.54 | 2.67 | 2.81 | ns, max |
| | | XC2VP50 | 2.54 | 2.68 | 2.87 | ns, max |
| | | XC2VP70 | 2.54 | 2.72 | 2.91 | ns, max |
| | | XC2VPX70 | 2.54 | 2.72 | 2.91 | ns, max |
| | | XC2VP100 | N/A | 4.71 | 4.80 | ns, max |
| **Propagation Delays** | | | | | | |
| Pad to output IQ via transparent latch, no delay | $T_{IOPLI}$ | All | 0.86 | 0.89 | 0.93 | ns, max |
| Pad to output IQ via transparent latch, with delay | $T_{IOPLID}$ | XC2VP2 | 2.30 | 2.62 | 2.97 | ns, max |
| | | XC2VP4 | 2.57 | 2.89 | 3.23 | ns, max |
| | | XC2VP7 | 2.50 | 2.84 | 3.17 | ns, max |
| | | XC2VP20 | 2.65 | 3.04 | 3.42 | ns, max |
| | | XC2VPX20 | 2.65 | 3.04 | 3.42 | ns, max |
| | | XC2VP30 | 2.69 | 3.12 | 3.51 | ns, max |
| | | XC2VP40 | 3.30 | 3.63 | 4.03 | ns, max |
| | | XC2VP50 | 3.86 | 4.10 | 4.45 | ns, max |
| | | XC2VP70 | 4.00 | 4.25 | 4.57 | ns, max |
| | | XC2VPX70 | 4.00 | 4.25 | 4.57 | ns, max |
| | | XC2VP100 | N/A | 6.50 | 7.06 | ns, max |
| Clock CLK to output IQ | $T_{IOCKIQ}$ | All | 0.60 | 0.60 | 0.67 | ns, max |

*Table 35:* **IOB Input Switching Characteristics *(Continued)***

| | | | Speed Grade | | | |
|---|---|---|---|---|---|---|
| **Description** | **Symbol** | **Device** | **-7** | **-6** | **-5** | **Units** |
| **Setup and Hold Times With Respect to Clock at IOB Input Register** | | | | | | |
| Pad, no delay | $T_{IOPICK}/T_{IOICKP}$ | All | 0.84/–0.61 | 0.86/–0.63 | 0.90/–0.67 | ns, min |
| Pad, with delay | $T_{IOPICKD}/T_{IOICKPD}$ | XC2VP2 | 2.28/–1.89 | 2.60/–2.15 | 2.95/–2.43 | ns, max |
| | | XC2VP4 | 2.55/–2.10 | 2.87/–2.36 | 3.21/–2.65 | ns, max |
| | | XC2VP7 | 2.48/–2.05 | 2.82/–2.32 | 3.15/–2.60 | ns, max |
| | | XC2VP20 | 2.63/–2.05 | 3.02/–2.35 | 3.40/–2.66 | ns, max |
| | | XC2VPX20 | 2.63/–2.05 | 3.02/–2.35 | 3.40/–2.66 | ns, max |
| | | XC2VP30 | 2.67/–2.07 | 3.09/–2.42 | 3.49/–2.73 | ns, max |
| | | XC2VP40 | 3.28/–2.56 | 3.61/–2.83 | 4.01/–3.15 | ns, max |
| | | XC2VP50 | 3.84/–3.02 | 4.08/–3.21 | 4.42/–3.48 | ns, max |
| | | XC2VP70 | 3.98/–3.13 | 4.23/–3.33 | 4.55/–3.58 | ns, max |
| | | XC2VPX70 | 3.98/–3.13 | 4.23/–3.33 | 4.55/–3.58 | ns, max |
| | | XC2VP100 | N/A | 6.48/–5.13 | 7.04/–5.57 | ns, max |
| ICE input | $T_{IOICECK}/T_{IOCKICE}$ | All | 0.39/ 0.01 | 0.44/ 0.01 | 0.49/ 0.01 | ns, min |
| SR input (IFF, synchronous) | $T_{IOSRCKI}$ | All | 0.52 | 0.57 | 0.75 | ns, min |
| **Set/Reset Delays** | | | | | | |
| SR input to IQ (asynchronous) | $T_{IOSRIQ}$ | All | 1.13 | 1.27 | 1.42 | ns, max |
| GSR to output IQ | $T_{GSRQ}$ | All | 5.87 | 6.75 | 7.43 | ns, max |

**Notes:**
1. Input timing for LVCMOS25 is measured at 1.25V. For other I/O standards, see Table 39.

## IOB Input Switching Characteristics Standard Adjustments

Table 36 gives all standard-specific data input delay adjustments.

*Table 36:* **IOB Input Switching Characteristics Standard Adjustments**

| Description | IOSTANDARD Attribute | Timing Parameter | Speed Grade | | | Units |
|---|---|---|---|---|---|---|
| | | | -7 | -6 | -5 | |
| LVTTL (Low-Voltage Transistor-Transistor Logic) | LVTTL | $T_{ILVTTL}$ | 0.07 | 0.08 | 0.09 | ns |
| LVCMOS (Low-Voltage CMOS ), 3.3V | LVCMOS33 | $T_{ILVCMOS33}$ | 0.04 | 0.05 | 0.05 | ns |
| LVCMOS, 2.5V | LVCMOS25 | $T_{ILVCMOS25}$ | 0.00 | 0.00 | 0.00 | ns |
| LVCMOS, 1.8V | LVCMOS18 | $T_{ILVCMOS18}$ | 0.29 | 0.33 | 0.36 | ns |
| LVCMOS, 1.5V | LVCMOS15 | $T_{ILVCMOS15}$ | 0.36 | 0.41 | 0.45 | ns |
| LVDS (Low-Voltage Differential Signaling), 2.5V | LVDS_25 | $T_{ILVDS_25}$ | 0.31 | 0.36 | 0.40 | ns |
| LVDSEXT (LVDS Extended Mode), 2.5V | LVDSEXT_25 | $T_{ILVDSEXT_25}$ | 0.33 | 0.37 | 0.41 | ns |
| ULVDS (Ultra LVDS), 2.5V | ULVDS_25 | $T_{IULVDS_25}$ | 0.31 | 0.36 | 0.40 | ns |
| BLVDS (Bus LVDS), 2.5V | BLVDS_25 | $T_{IBLVDS_25}$ | 0.00 | 0.00 | 0.00 | ns |
| LDT (HyperTransport), 2.5V | LDT_25 | $T_{ILDT_25}$ | 0.31 | 0.36 | 0.40 | ns |
| LVPECL (Low-Voltage Positive Emitter-Coupled Logic), 2.5V | LVPECL_25 | $T_{ILVPECL_25}$ | 0.69 | 0.80 | 0.88 | ns |
| PCI (Peripheral Component Interface), 33 MHz, 3.3V | PCI33_3 | $T_{IPCI33_3}$ | 0.14 | 0.16 | 0.18 | ns |
| PCI, 66 MHz, 3.3V | PCI66_3 | $T_{IPCI66_3}$ | 0.15 | 0.17 | 0.19 | ns |
| PCI-X, 133 MHz, 3.3V | PCIX | $T_{IPCIX}$ | 0.12 | 0.13 | 0.15 | ns |
| GTL (Gunning Transceiver Logic) | GTL | $T_{IGTL}$ | 0.59 | 0.68 | 0.74 | ns |
| GTL Plus | GTLP | $T_{IGTLP}$ | 0.63 | 0.72 | 0.79 | ns |
| HSTL (High-Speed Transceiver Logic), Class I | HSTL_I | $T_{IHSTL_I}$ | 0.59 | 0.68 | 0.75 | ns |
| HSTL, Class II | HSTL_II | $T_{IHSTL_II}$ | 0.59 | 0.68 | 0.75 | ns |
| HSTL, Class III | HSTL_III | $T_{IHSTL_III}$ | 0.57 | 0.66 | 0.72 | ns |
| HSTL, Class IV | HSTL_IV | $T_{IHSTL_IV}$ | 0.58 | 0.67 | 0.74 | ns |
| HSTL, Class I, 1.8V | HSTL_I_18 | $T_{IHSTL_I_18}$ | 0.57 | 0.65 | 0.72 | ns |
| HSTL, Class II, 1.8V | HSTL_II_18 | $T_{IHSTL_II_18}$ | 0.55 | 0.63 | 0.69 | ns |
| HSTL, Class III, 1.8V | HSTL_III_18 | $T_{IHSTL_III_18}$ | 0.56 | 0.64 | 0.70 | ns |
| HSTL, Class IV, 1.8V | HSTL_IV_18 | $T_{IHSTL_IV_18}$ | 0.57 | 0.65 | 0.71 | ns |
| SSTL (Stub Series Terminated Logic), Class I, 1.8V | SSTL18_I | $T_{ISSTL18_I}$ | 0.62 | 0.72 | 0.79 | ns |
| SSTL, Class II, 1.8V | SSTL18_II | $T_{ISSTL18_II}$ | 0.64 | 0.73 | 0.81 | ns |
| SSTL, Class I, 2.5V | SSTL2_I | $T_{ISSTL2_I}$ | 0.62 | 0.72 | 0.79 | ns |
| SSTL, Class II, 2.5V | SSTL2_II | $T_{ISSTL2_II}$ | 0.64 | 0.73 | 0.81 | ns |
| LVDCI (Low-Voltage Digitally Controlled Impedance), 3.3V | LVDCI_33 | $T_{ILVDCI_33}$ | –0.05 | –0.05 | –0.06 | ns |
| LVDCI, 2.5V | LVDCI_25 | $T_{ILVDCI_25}$ | 0.00 | 0.00 | 0.00 | ns |
| LVDCI, 1.8V | LVDCI_18 | $T_{ILVDCI_18}$ | 0.07 | 0.09 | 0.09 | ns |
| LVDCI, 1.5V | LVDCI_15 | $T_{ILVDCI_15}$ | 0.13 | 0.15 | 0.17 | ns |
| LVDCI, 2.5V, Half-Impedance | LVDCI_DV2_25 | $T_{ILVDCI_DV2_25}$ | 0.00 | 0.00 | 0.00 | ns |
| LVDCI, 1.8V, Half-Impedance | LVDCI_DV2_18 | $T_{ILVDCI_DV2_18}$ | 0.07 | 0.09 | 0.09 | ns |
| LVDCI, 1.5V, Half-Impedance | LVDCI_DV2_15 | $T_{ILVDCI_DV2_15}$ | 0.13 | 0.15 | 0.17 | ns |
| HSLVDCI (High-Speed Low-Voltage DCI), 1.5V | HSLVDCI_15 | $T_{IHSLVDCI_15}$ | 0.59 | 0.68 | 0.75 | ns |

*Table 36:* **IOB Input Switching Characteristics Standard Adjustments** ***(Continued)***

| Description | IOSTANDARD Attribute | Timing Parameter | Speed Grade | | | Units |
|---|---|---|---|---|---|---|
| | | | -7 | -6 | -5 | |
| HSLVDCI, 1.8V | HSLVDCI_18 | $T_{IHSLVDCI_18}$ | 0.59 | 0.68 | 0.75 | ns |
| HSLVDCI, 2.5V | HSLVDCI_25 | $T_{IHSLVDCI_25}$ | 0.59 | 0.68 | 0.75 | ns |
| HSLVDCI, 3.3V | HSLVDCI_33 | $T_{IHSLVDCI_33}$ | 0.59 | 0.68 | 0.75 | ns |
| GTL (Gunning Transceiver Logic) with DCI | GTL_DCI | $T_{IGTL_DCI}$ | 0.49 | 0.57 | 0.62 | ns |
| GTL Plus with DCI | GTLP_DCI | $T_{IGTLP_DCI}$ | 0.27 | 0.31 | 0.35 | ns |
| HSTL (High-Speed Transceiver Logic), Class I, with DCI | HSTL_I_DCI | $T_{IHSTL_I_DCI}$ | 0.27 | 0.31 | 0.35 | ns |
| HSTL, Class II, with DCI | HSTL_II_DCI | $T_{IHSTL_II_DCI}$ | 0.27 | 0.31 | 0.35 | ns |
| HSTL, Class III, with DCI | HSTL_III_DCI | $T_{IHSTL_III_DCI}$ | 0.27 | 0.31 | 0.35 | ns |
| HSTL, Class IV, with DCI | HSTL_IV_DCI | $T_{IHSTL_IV_DCI}$ | 0.27 | 0.31 | 0.35 | ns |
| HSTL, Class I, 1.8V, with DCI | HSTL_I_DCI_18 | $T_{IHSTL_I_DCI_18}$ | 0.27 | 0.31 | 0.35 | ns |
| HSTL, Class II, 1.8V, with DCI | HSTL_II_DCI_18 | $T_{IHSTL_II_DCI_18}$ | 0.27 | 0.31 | 0.35 | ns |
| HSTL, Class III, 1.8V, with DCI | HSTL_III_DCI_18 | $T_{IHSTL_III_DCI_18}$ | 0.27 | 0.31 | 0.35 | ns |
| HSTL, Class IV, 1.8V, with DCI | HSTL_IV_DCI_18 | $T_{IHSTL_IV_DCI_18}$ | 0.27 | 0.31 | 0.35 | ns |
| SSTL (Stub Series Terminated Logic), Class I, 1.8V, with DCI | SSTL18_I_DCI | $T_{ISSTL18_I_DCI}$ | 0.62 | 0.72 | 0.79 | ns |
| SSTL, Class II, 1.8V, with DCI | SSTL18_II_DCI | $T_{ISSTL18_II_DCI}$ | 0.64 | 0.73 | 0.81 | ns |
| SSTL, Class I, 2.5V, with DCI | SSTL2_I_DCI | $T_{ISSTL2_I_DCI}$ | 0.17 | 0.20 | 0.22 | ns |
| SSTL, Class II, 2.5V, with DCI | SSTL2_II_DCI | $T_{ISSTL2_II_DCI}$ | 0.17 | 0.20 | 0.22 | ns |
| LVDS, 2.5V, with DCI | LVDS_25_DCI | $T_{ILVDS_25_DCI}$ | 0.31 | 0.36 | 0.40 | ns |
| LVDSEXT, 2.5V, with DCI | LVDSEXT_25_DCI | $T_{ILVDSEXT_25_DCI}$ | 0.33 | 0.37 | 0.41 | ns |
| LVDS, 2.5V, with Differential Termination (DT) | LVDS_25_DT | $T_{ILVDS_25_DT}$ | 0.31 | 0.36 | 0.40 | ns |
| LVDSEXT, 2.5V, with DT | LVDSEXT_25_DT | $T_{ILVDSEXT_25_DT}$ | 0.33 | 0.37 | 0.41 | ns |
| ULVDS, 2.5V, with DT | ULVDS_25_DT | $T_{IULVDS_25_DT}$ | 0.31 | 0.36 | 0.40 | ns |
| LDT, 2.5V, with DT | LDT_25_DT | $T_{ILDT_25_DT}$ | 0.31 | 0.36 | 0.40 | ns |

## IOB Output Switching Characteristics

Output delays terminating at a pad are specified for LVCMOS25 with 12 mA drive and fast slew rate. For other standards, adjust the delays with the values shown in IOB Output Switching Characteristics Standard Adjustments.

*Table 37:* **IOB Output Switching Characteristics**

| | | Speed Grade | | | |
|---|---|---|---|---|---|
| **Description** | **Symbol** | **-7** | **-6** | **-5** | **Units** |
| **Propagation Delays** | | | | | |
| O input to Pad | $T_{IOOP}$ | 1.58 | 1.68 | 1.85 | ns, max |
| O input to Pad via transparent latch | $T_{IOOLP}$ | 1.65 | 1.82 | 1.99 | ns, max |
| **3-State Delays** | | | | | |
| T input to Pad high-impedance(2) | $T_{IOTHZ}$ | 1.23 | 1.35 | 1.51 | ns, max |
| T input to valid data on Pad | $T_{IOTP}$ | 1.51 | 1.63 | 1.78 | ns, max |
| T input to Pad high-impedance via transparent latch(2) | $T_{IOTLPHZ}$ | 1.08 | 1.22 | 1.36 | ns, max |
| T input to valid data on Pad via transparent latch | $T_{IOTLPON}$ | 1.56 | 1.69 | 1.85 | ns, max |
| GTS to Pad high-impedance(2) | $T_{GTS}$ | 4.11 | 4.73 | 5.20 | ns, max |
| **Sequential Delays** | | | | | |
| Clock CLK to Pad | $T_{IOCKP}$ | 1.59 | 1.76 | 1.93 | ns, max |
| Clock CLK to Pad high-impedance (synchronous)(2) | $T_{IOCKHZ}$ | 1.39 | 1.55 | 1.73 | ns, max |
| Clock CLK to valid data on Pad (synchronous) | $T_{IOCKON}$ | 1.67 | 1.82 | 2.00 | ns, max |
| **Setup and Hold Times Before/After Clock CLK** | | | | | |
| O input | $T_{IOOCK}/T_{IOCKO}$ | 0.23/ 0.12 | 0.26/ 0.14 | 0.29/ 0.15 | ns, min |
| OCE input | $T_{IOOCECK}/T_{IOCKOCE}$ | 0.39/ 0.01 | 0.44/ 0.01 | 0.49/ 0.01 | ns, min |
| SR input (OFF) | $T_{IOSRCKO}/T_{IOCKOSR}$ | 0.52/ 0.00 | 0.57/ 0.00 | 0.75/ 0.00 | ns, min |
| 3–State Setup Times, T input | $T_{IOTCK}/T_{IOCKT}$ | 0.23/ 0.12 | 0.26/ 0.14 | 0.29/ 0.15 | ns, min |
| 3-State Setup Times, TCE input | $T_{IOTCECK}/T_{IOCKTCE}$ | 0.39/ 0.01 | 0.44/ 0.01 | 0.49/ 0.01 | ns, min |
| 3-State Setup Times, SR input (TFF) | $T_{IOSRCKT}/T_{IOCKTSR}$ | 0.52/ 0.00 | 0.57/ 0.00 | 0.75/ 0.00 | ns, min |
| **Set/Reset Delays** | | | | | |
| Minimum Pulse Width, SR inputs (asynchronous) | $T_{RPW}$ | 0.37 | 0.40 | 0.45 | ns, min |
| SR input to Pad (asynchronous) | $T_{IOSRP}$ | 2.33 | 2.56 | 2.83 | ns, max |
| SR input to Pad high-impedance (asynchronous)(2) | $T_{IOSRHZ}$ | 1.97 | 2.16 | 2.41 | ns, max |
| SR input to valid data on Pad (asynchronous) | $T_{IOSRON}$ | 2.24 | 2.44 | 2.69 | ns, max |
| GSR to Pad | $T_{IOGSRQ}$ | 5.87 | 6.75 | 7.43 | ns, max |

**Notes:**
1. A Zero “0” Hold Time listing indicates no hold time or a negative hold time. Negative values can not be guaranteed “best-case”, but if a “0” is listed, there is no positive hold time.
2. The 3-state turn-off delays should not be adjusted.

## IOB Output Switching Characteristics Standard Adjustments

Table 38 gives all standard-specific adjustments for output delays terminating at pads, based on standard capacitive load, $C_{REF}$. Output delays terminating at a pad are specified for LVCMOS25 with 12 mA drive and fast slew rate. For other standards, adjust the delays by the values shown.

*Table 38:* **IOB Output Switching Characteristics Standard Adjustments**

| Description | IOSTANDARD Attribute | Timing Parameter | Speed Grade | | | Units |
|---|---|---|---|---|---|---|
| | | | -7 | -6 | -5 | |
| LVTTL (Low-Voltage Transistor-Transistor Logic), Slow, 2 mA | LVTTL_S2 | $T_{OLVTTL_S2}$ | 5.42 | 6.24 | 6.86 | ns |
| LVTTL, Slow, 4 mA | LVTTL_S4 | $T_{OLVTTL_S4}$ | 3.09 | 3.55 | 3.91 | ns |
| LVTTL, Slow, 6 mA | LVTTL_S6 | $T_{OLVTTL_S6}$ | 2.26 | 2.60 | 2.86 | ns |
| LVTTL, Slow, 8 mA | LVTTL_S8 | $T_{OLVTTL_S8}$ | 1.47 | 1.69 | 1.86 | ns |
| LVTTL, Slow, 12 mA | LVTTL_S12 | $T_{OLVTTL_S12}$ | 1.02 | 1.18 | 1.29 | ns |
| LVTTL, Slow, 16 mA | LVTTL_S16 | $T_{OLVTTL_S16}$ | 0.46 | 0.53 | 0.58 | ns |
| LVTTL, Slow, 24 mA | LVTTL_S24 | $T_{OLVTTL_S24}$ | 0.37 | 0.42 | 0.47 | ns |
| LVTTL, Fast, 2 mA | LVTTL_F2 | $T_{OLVTTL_F2}$ | 4.42 | 5.09 | 5.59 | ns |
| LVTTL, Fast, 4 mA | LVTTL_F4 | $T_{OLVTTL_F4}$ | 1.95 | 2.24 | 2.46 | ns |
| LVTTL, Fast, 6 mA | LVTTL_F6 | $T_{OLVTTL_F6}$ | 1.10 | 1.26 | 1.39 | ns |
| LVTTL, Fast, 8 mA | LVTTL_F8 | $T_{OLVTTL_F8}$ | 0.40 | 0.46 | 0.51 | ns |
| LVTTL, Fast, 12 mA | LVTTL_F12 | $T_{OLVTTL_F12}$ | 0.24 | 0.27 | 0.30 | ns |
| LVTTL, Fast, 16 mA | LVTTL_F16 | $T_{OLVTTL_F16}$ | 0.05 | 0.06 | 0.07 | ns |
| LVTTL, Fast, 24 mA | LVTTL_F24 | $T_{OLVTTL_F24}$ | –0.01 | –0.01 | –0.01 | ns |
| LVCMOS (Low-Voltage CMOS), 3.3V, Slow, 2 mA | LVCMOS33_S2 | $T_{OLVCMOS33_S2}$ | 5.42 | 6.23 | 6.86 | ns |
| LVCMOS, 3.3V, Slow, 4 mA | LVCMOS33_S4 | $T_{OLVCMOS33_S4}$ | 3.14 | 3.61 | 3.97 | ns |
| LVCMOS, 3.3V, Slow, 6 mA | LVCMOS33_S6 | $T_{OLVCMOS33_S6}$ | 2.26 | 2.60 | 2.86 | ns |
| LVCMOS, 3.3V, Slow, 8 mA | LVCMOS33_S8 | $T_{OLVCMOS33_S8}$ | 1.47 | 1.69 | 1.86 | ns |
| LVCMOS, 3.3V, Slow, 12 mA | LVCMOS33_S12 | $T_{OLVCMOS33_S12}$ | 1.03 | 1.18 | 1.30 | ns |
| LVCMOS, 3.3V, Slow, 16 mA | LVCMOS33_S16 | $T_{OLVCMOS33_S16}$ | 0.45 | 0.52 | 0.57 | ns |
| LVCMOS, 3.3V, Slow, 24 mA | LVCMOS33_S24 | $T_{OLVCMOS33_S24}$ | 0.39 | 0.44 | 0.49 | ns |
| LVCMOS, 3.3V, Fast, 2 mA | LVCMOS33_F2 | $T_{OLVCMOS33_F2}$ | 4.46 | 5.13 | 5.64 | ns |
| LVCMOS, 3.3V, Fast, 4 mA | LVCMOS33_F4 | $T_{OLVCMOS33_F4}$ | 1.96 | 2.25 | 2.48 | ns |
| LVCMOS, 3.3V, Fast, 6 mA | LVCMOS33_F6 | $T_{OLVCMOS33_F6}$ | 1.11 | 1.28 | 1.40 | ns |
| LVCMOS, 3.3V, Fast, 8 mA | LVCMOS33_F8 | $T_{OLVCMOS33_F8}$ | 0.41 | 0.47 | 0.52 | ns |
| LVCMOS, 3.3V, Fast, 12 mA | LVCMOS33_F12 | $T_{OLVCMOS33_F12}$ | 0.23 | 0.26 | 0.28 | ns |
| LVCMOS, 3.3V, Fast, 16 mA | LVCMOS33_F16 | $T_{OLVCMOS33_F16}$ | 0.02 | 0.02 | 0.03 | ns |
| LVCMOS, 3.3V, Fast, 24 mA | LVCMOS33_F24 | $T_{OLVCMOS33_F24}$ | –0.07 | –0.08 | –0.09 | ns |
| LVCMOS, 2.5V, Slow, 2 mA | LVCMOS25_S2 | $T_{OLVCMOS25_S2}$ | 4.12 | 4.74 | 5.21 | ns |
| LVCMOS, 2.5V, Slow, 4 mA | LVCMOS25_S4 | $T_{OLVCMOS25_S4}$ | 2.43 | 2.80 | 3.07 | ns |
| LVCMOS, 2.5V, Slow, 6 mA | LVCMOS25_S6 | $T_{OLVCMOS25_S6}$ | 1.76 | 2.02 | 2.22 | ns |
| LVCMOS, 2.5V, Slow, 8 mA | LVCMOS25_S8 | $T_{OLVCMOS25_S8}$ | 1.04 | 1.19 | 1.31 | ns |
| LVCMOS, 2.5V, Slow, 12 mA | LVCMOS25_S12 | $T_{OLVCMOS25_S12}$ | 0.76 | 0.87 | 0.96 | ns |
| LVCMOS, 2.5V, Slow, 16 mA | LVCMOS25_S16 | $T_{OLVCMOS25_S16}$ | 0.41 | 0.47 | 0.52 | ns |
| LVCMOS, 2.5V, Slow, 24 mA | LVCMOS25_S24 | $T_{OLVCMOS25_S24}$ | 0.23 | 0.26 | 0.28 | ns |
| LVCMOS, 2.5V, Fast, 2 mA | LVCMOS25_F2 | $T_{OLVCMOS25_F2}$ | 3.29 | 3.78 | 4.16 | ns |
| LVCMOS, 2.5V, Fast, 4 mA | LVCMOS25_F4 | $T_{OLVCMOS25_F4}$ | 1.31 | 1.50 | 1.65 | ns |

*Table 38:* **IOB Output Switching Characteristics Standard Adjustments *(Continued)***

| Description | IOSTANDARD Attribute | Timing Parameter | Speed Grade | | | Units |
|---|---|---|---|---|---|---|
| | | | -7 | -6 | -5 | |
| LVCMOS, 2.5V, Fast, 6 mA | LVCMOS25_F6 | $T_{OLVCMOS25_F6}$ | 0.62 | 0.71 | 0.78 | ns |
| LVCMOS, 2.5V, Fast, 8 mA | LVCMOS25_F8 | $T_{OLVCMOS25_F8}$ | 0.20 | 0.23 | 0.25 | ns |
| LVCMOS, 2.5V, Fast, 12 mA | LVCMOS25_F12 | $T_{OLVCMOS25_F12}$ | 0.00 | 0.00 | 0.00 | ns |
| LVCMOS, 2.5V, Fast, 16 mA | LVCMOS25_F16 | $T_{OLVCMOS25_F16}$ | –0.03 | –0.03 | –0.04 | ns |
| LVCMOS, 2.5V, Fast, 24 mA | LVCMOS25_F24 | $T_{OLVCMOS25_F24}$ | –0.15 | –0.15 | –0.15 | ns |
| LVCMOS, 1.8V, Slow, 2 mA | LVCMOS18_S2 | $T_{OLVCMOS18_S2}$ | 4.20 | 4.83 | 5.31 | ns |
| LVCMOS, 1.8V, Slow, 4 mA | LVCMOS18_S4 | $T_{OLVCMOS18_S4}$ | 2.76 | 3.18 | 3.49 | ns |
| LVCMOS, 1.8V, Slow, 6 mA | LVCMOS18_S6 | $T_{OLVCMOS18_S6}$ | 1.91 | 2.20 | 2.41 | ns |
| LVCMOS, 1.8V, Slow, 8 mA | LVCMOS18_S8 | $T_{OLVCMOS18_S8}$ | 1.92 | 2.20 | 2.42 | ns |
| LVCMOS, 1.8V, Slow, 12 mA | LVCMOS18_S12 | $T_{OLVCMOS18_S12}$ | 1.58 | 1.81 | 1.99 | ns |
| LVCMOS, 1.8V, Slow, 16 mA | LVCMOS18_S16 | $T_{OLVCMOS18_S16}$ | 0.76 | 0.87 | 0.96 | ns |
| LVCMOS, 1.8V, Fast, 2 mA | LVCMOS18_F2 | $T_{OLVCMOS18_F2}$ | 2.34 | 2.69 | 2.95 | ns |
| LVCMOS, 1.8V, Fast, 4 mA | LVCMOS18_F4 | $T_{OLVCMOS18_F4}$ | 0.71 | 0.81 | 0.89 | ns |
| LVCMOS, 1.8V, Fast, 6 mA | LVCMOS18_F6 | $T_{OLVCMOS18_F6}$ | 0.50 | 0.57 | 0.63 | ns |
| LVCMOS, 1.8V, Fast, 8 mA | LVCMOS18_F8 | $T_{OLVCMOS18_F8}$ | 0.48 | 0.55 | 0.61 | ns |
| LVCMOS, 1.8V, Fast, 12 mA | LVCMOS18_F12 | $T_{OLVCMOS18_F12}$ | 0.30 | 0.34 | 0.38 | ns |
| LVCMOS, 1.8V, Fast, 16 mA | LVCMOS18_F16 | $T_{OLVCMOS18_F16}$ | 0.11 | 0.12 | 0.13 | ns |
| LVCMOS, 1.5V, Slow, 2 mA | LVCMOS15_S2 | $T_{OLVCMOS15_S2}$ | 6.19 | 7.12 | 7.83 | ns |
| LVCMOS, 1.5V, Slow, 4 mA | LVCMOS15_S4 | $T_{OLVCMOS15_S4}$ | 4.28 | 4.93 | 5.42 | ns |
| LVCMOS, 1.5V, Slow, 6 mA | LVCMOS15_S6 | $T_{OLVCMOS15_S6}$ | 2.81 | 3.24 | 3.56 | ns |
| LVCMOS, 1.5V, Slow, 8 mA | LVCMOS15_S8 | $T_{OLVCMOS15_S8}$ | 2.55 | 2.93 | 3.23 | ns |
| LVCMOS, 1.5V, Slow, 12 mA | LVCMOS15_S12 | $T_{OLVCMOS15_S12}$ | 1.31 | 1.51 | 1.66 | ns |
| LVCMOS, 1.5V, Slow, 16 mA | LVCMOS15_S16 | $T_{OLVCMOS15_S16}$ | 1.28 | 1.47 | 1.62 | ns |
| LVCMOS, 1.5V, Fast, 2 mA | LVCMOS15_F2 | $T_{OLVCMOS15_F2}$ | 2.26 | 2.60 | 2.86 | ns |
| LVCMOS, 1.5V, Fast, 4 mA | LVCMOS15_F4 | $T_{OLVCMOS15_F4}$ | 1.66 | 1.90 | 2.09 | ns |
| LVCMOS, 1.5V, Fast, 6 mA | LVCMOS15_F6 | $T_{OLVCMOS15_F6}$ | 0.65 | 0.75 | 0.82 | ns |
| LVCMOS, 1.5V, Fast, 8 mA | LVCMOS15_F8 | $T_{OLVCMOS15_F8}$ | 0.94 | 1.08 | 1.19 | ns |
| LVCMOS, 1.5V, Fast, 12 mA | LVCMOS15_F12 | $T_{OLVCMOS15_F12}$ | 0.25 | 0.29 | 0.32 | ns |
| LVCMOS, 1.5V, Fast, 16 mA | LVCMOS15_F16 | $T_{OLVCMOS15_F16}$ | 0.28 | 0.32 | 0.35 | ns |
| LVDS (Low-Voltage Differential Signaling), 2.5V | LVDS_25 | $T_{OLVDS_25}$ | 0.01 | 0.01 | 0.01 | ns |
| LVDSEXT (LVDS Extended Mode), 2.5V | LVDSEXT_25 | $T_{OLVDSEXT_25}$ | 0.13 | 0.15 | 0.16 | ns |
| ULVDS (Ultra LVDS), 2.5V | ULVDS_25 | $T_{OULVDS_25}$ | 0.13 | 0.14 | 0.16 | ns |
| BLVDS (Bus LVDS), 2.5V | BLVDS_25 | $T_{OBLVDS_25}$ | 0.00 | 0.00 | 0.00 | ns |
| LDT (HyperTransport), 2.5V | LDT_25 | $T_{OLDT_25}$ | 0.13 | 0.14 | 0.16 | ns |
| LVPECL (Low-Voltage Positive Emitter-Coupled Logic), 2.5V | LVPECL_25 | $T_{OLVPECL_25}$ | 0.17 | 0.19 | 0.21 | ns |
| PCI (Peripheral Component Interface), 33 MHz, 3.3V | PCI33_3 | $T_{OPCI33_3}$ | 0.83 | 0.93 | 1.01 | ns |
| PCI, 66 MHz, 3.3V | PCI66_3 | $T_{OPCI66_3}$ | 0.89 | 0.97 | 1.05 | ns |
| PCI-X, 133 MHz, 3.3V | PCIX | $T_{OPCIX}$ | 0.92 | 1.02 | 1.10 | ns |
| GTL (Gunning Transceiver Logic) | GTL | $T_{OGTL}$ | 0.08 | 0.10 | 0.11 | ns |
| GTL Plus | GTLP | $T_{OGTLP}$ | 0.04 | 0.05 | 0.06 | ns |
| HSTL (High-Speed Transceiver Logic), Class I | HSTL_I | $T_{OHSTL_I}$ | 0.56 | 0.64 | 0.70 | ns |

*Table 38:* **IOB Output Switching Characteristics Standard Adjustments *(Continued)***

| Description | IOSTANDARD Attribute | Timing Parameter | Speed Grade | | | Units |
|---|---|---|---|---|---|---|
| | | | -7 | -6 | -5 | |
| HSTL, Class II | HSTL_II | $T_{OHSTL_II}$ | 0.30 | 0.35 | 0.38 | ns |
| HSTL, Class III | HSTL_III | $T_{OHSTL_IIII}$ | 0.31 | 0.35 | 0.39 | ns |
| HSTL, Class IV | HSTL_IV | $T_{OHSTL_IV}$ | 0.15 | 0.17 | 0.19 | ns |
| HSTL, Class I, 1.8V | HSTL_I_18 | $T_{OHSTL_I_18}$ | 0.56 | 0.64 | 0.70 | ns |
| HSTL, Class II, 1.8V | HSTL_II_18 | $T_{OHSTL_II_18}$ | 0.30 | 0.35 | 0.38 | ns |
| HSTL, Class III, 1.8V | HSTL_III_18 | $T_{OHSTL_IIII_18}$ | 0.36 | 0.41 | 0.45 | ns |
| HSTL, Class IV, 1.8V | HSTL_IV_18 | $T_{OHSTL_IV_18}$ | 0.19 | 0.22 | 0.24 | ns |
| SSTL (Stub Series Terminated Logic), Class I, 1.8V | SSTL18_I | $T_{OSSTL18_I}$ | 0.80 | 0.92 | 1.01 | ns |
| SSTL, Class II, 1.8V | SSTL18_II | $T_{OSSTL18_II}$ | 0.45 | 0.51 | 0.56 | ns |
| SSTL, Class I, 2.5V | SSTL2_I | $T_{OSSTL2_I}$ | 0.63 | 0.72 | 0.79 | ns |
| SSTL, Class II, 2.5V | SSTL2_II | $T_{OSSTL2_II}$ | 0.22 | 0.25 | 0.27 | ns |
| LVDCI (Low-Voltage Digitally Controlled Impedance), 3.3V | LVDCI_33 | $T_{OLVDCI_33}$ | 0.72 | 0.83 | 0.91 | ns |
| LVDCI, 2.5V | LVDCI_25 | $T_{OLVDCI_25}$ | 0.56 | 0.64 | 0.71 | ns |
| LVDCI, 1.8V | LVDCI_18 | $T_{OLVDCI_18}$ | 0.65 | 0.75 | 0.82 | ns |
| LVDCI, 1.5V | LVDCI_15 | $T_{OLVDCI_15}$ | 1.00 | 1.15 | 1.26 | ns |
| LVDCI, 2.5V, Half-Impedance | LVDCI_DV2_25 | $T_{OLVDCI_DV2_25}$ | 0.06 | 0.07 | 0.08 | ns |
| LVDCI, 1.8V, Half-Impedance | LVDCI_DV2_18 | $T_{OLVDCI_DV2_18}$ | 0.30 | 0.34 | 0.38 | ns |
| LVDCI, 1.5V, Half-Impedance | LVDCI_DV2_15 | $T_{OLVDCI_DV2_15}$ | 0.60 | 0.69 | 0.76 | ns |
| HSLVDCI (High-Speed Low-Voltage DCI), 1.5V | HSLVDCI_15 | $T_{OHSLVDCI_15}$ | 1.00 | 1.15 | 1.26 | ns |
| HSLVDCI, 1.8V | HSLVDCI_18 | $T_{OHSLVDCI_18}$ | 0.65 | 0.75 | 0.82 | ns |
| HSLVDCI, 2.5V | HSLVDCI_25 | $T_{OHSLVDCI_25}$ | 0.56 | 0.64 | 0.71 | ns |
| HSLVDCI, 3.3V | HSLVDCI_33 | $T_{OHSLVDCI_33}$ | 0.72 | 0.83 | 0.91 | ns |
| GTL (Gunning Transceiver Logic) with DCI | GTL_DCI | $T_{OGTL_DCI}$ | 1.21 | 1.39 | 1.53 | ns |
| GTL Plus with DCI | GTLP_DCI | $T_{OGTLP_DCI}$ | 0.05 | 0.06 | 0.07 | ns |
| HSTL (High-Speed Transceiver Logic), Class I, with DCI | HSTL_I_DCI | $T_{OHSTL_I_DCI}$ | 0.55 | 0.63 | 0.69 | ns |
| HSTL, Class II, with DCI | HSTL_II_DCI | $T_{OHSTL_II_DCI}$ | 0.47 | 0.54 | 0.60 | ns |
| HSTL, Class III, with DCI | HSTL_III_DCI | $T_{OHSTL_III_DCI}$ | 0.31 | 0.36 | 0.40 | ns |
| HSTL, Class IV, with DCI | HSTL_IV_DCI | $T_{OHSTL_IV_DCI}$ | 1.81 | 2.08 | 2.29 | ns |
| HSTL, Class I, 1.8V, with DCI | HSTL_I_DCI_18 | $T_{OHSTL_I_DCI_18}$ | 0.55 | 0.63 | 0.70 | ns |
| HSTL, Class II, 1.8V, with DCI | HSTL_II_DCI_18 | $T_{OHSTL_II_DCI_18}$ | 0.24 | 0.28 | 0.31 | ns |
| HSTL, Class III, 1.8V, with DCI | HSTL_III_DCI_18 | $T_{OHSTL_III_DCI_18}$ | 0.35 | 0.40 | 0.44 | ns |
| HSTL, Class IV, 1.8V, with DCI | HSTL_IV_DCI_18 | $T_{OHSTL_IV_DCI_18}$ | 1.48 | 1.70 | 1.87 | ns |
| SSTL (Stub Series Terminated Logic), Class I, 1.8V, with DCI | SSTL18_I_DCI | $T_{OSSTL18_I_DCI}$ | 0.54 | 0.62 | 0.68 | ns |
| SSTL, Class II, 1.8V, with DCI | SSTL18_II_DCI | $T_{OSSTL18_II_DCI}$ | 0.24 | 0.28 | 0.31 | ns |
| SSTL, Class I, 2.5V, with DCI | SSTL2_I_DCI | $T_{OSSTL2_I_DCI}$ | 0.48 | 0.56 | 0.61 | ns |
| SSTL, Class II, 2.5V, with DCI | SSTL2_II_DCI | $T_{OSSTL2_II_DCI}$ | 0.48 | 0.56 | 0.61 | ns |

## I/O Standard Adjustment Measurement Methodology

### *Input Delay Measurements*

Table 39 shows the test setup parameters used for measuring Input standard adjustments (see Table 36, page 25).

*Table 39:* **Input Delay Measurement Methodology**

| Description | IOSTANDARD Attribute | $V_L$ (1,2) | $V_H$ (1,2) | $V_{MEAS}$ (1,4,5) | $V_{REF}$ (1,3,5) |
|---|---|---|---|---|---|
| LVTTL (Low-Voltage Transistor-Transistor Logic) | LVTTL | 0 | 3.3 | 1.65 | – |
| LVCMOS (Low-Voltage CMOS), 3.3V | LVCMOS33 | 0 | 3.3 | 1.65 | – |
| LVCMOS, 2.5V | LVCMOS25 | 0 | 2.5 | 1.25 | – |
| LVCMOS, 1.8V | LVCMOS18 | 0 | 1.8 | 0.9 | – |
| LVCMOS, 1.5V | LVCMOS15 | 0 | 1.5 | 0.75 | – |
| PCI (Peripheral Component Interface), 33 MHz, 3.3V | PCI33_3 | Per PCI Specification | | | – |
| PCI, 66 MHz, 3.3V | PCI66_3 | Per PCI Specification | | | – |
| PCI-X, 133 MHz, 3.3V | PCIX | Per PCI-X Specification | | | – |
| GTL (Gunning Transceiver Logic) | GTL | $V_{REF}$ – 0.2 | $V_{REF}$ + 0.2 | $V_{REF}$ | 0.80 |
| GTL Plus | GTLP | $V_{REF}$ – 0.2 | $V_{REF}$ + 0.2 | $V_{REF}$ | 1.0 |
| HSTL (High-Speed Transceiver Logic), Class I & II | HSTL_I, HSTL_II | $V_{REF}$ – 0.5 | $V_{REF}$ + 0.5 | $V_{REF}$ | 0.75 |
| HSTL, Class III & IV | HSTL_III, HSTL_IV | $V_{REF}$ – 0.5 | $V_{REF}$ + 0.5 | $V_{REF}$ | 0.90 |
| HSTL, Class I & II, 1.8V | HSTL_I_18, HSTL_II_18 | $V_{REF}$ – 0.5 | $V_{REF}$ + 0.5 | $V_{REF}$ | 0.90 |
| HSTL, Class III & IV, 1.8V | HSTL_III_18, HSTL_IV_18 | $V_{REF}$ – 0.5 | $V_{REF}$ + 0.5 | $V_{REF}$ | 1.08 |
| SSTL (Stub Terminated Tnscvr Logic), Class I & II, 2.5V | SSTL2_I, SSTL2_II | $V_{REF}$ – 0.75 | $V_{REF}$ + 0.75 | $V_{REF}$ | 1.25 |
| SSTL, Class I & II, 1.8V | SSTL18_I, SSTL18_II | $V_{REF}$ – 0.5 | $V_{REF}$ + 0.5 | $V_{REF}$ | 0.9 |
| LVDS (Low-Voltage Differential Signaling), 2.5V | LVDS_25 | 1.2 – 0.125 | 1.2 + 0.125 | 1.2 | |
| LVDSEXT (LVDS Extended Mode), 2.5V | LVDSEXT_25 | 1.2 – 0.125 | 1.2 + 0.125 | 1.2 | |
| ULVDS (Ultra LVDS), 2.5V | ULVDS_25 | 0.6 – 0.125 | 0.6 + 0.125 | 0.6 | |
| LDT (HyperTransport), 2.5V | LDT_25 | 0.6 – 0.125 | 0.6 + 0.125 | 0.6 | |
| LVPECL (Low-Voltage Positive Emitter-Coupled Logic), 2.5V | LVPECL_25 | 1.15 – 0.3 | 1.15 + 0.3 | 1.15 | |

**Notes:**

1. Input delay measurement methodology parameters for LVDCI and HSLVDCI are the same as for LVCMOS standards of the same voltage. Parameters for all other DCI standards are the same as for the corresponding non-DCI standards.
2. Input waveform switches between $V_L$ and $V_H$.
3. Measurements are made at typical, minimum, and maximum $V_{REF}$ values. Reported delays reflect worst case of these measurements. $V_{REF}$ values listed are typical. See ***Virtex-II Pro Platform FPGA User Guide*** for min/max specifications.
4. Input voltage level from which measurement starts.
5. Note that this is an input voltage reference that bears no relation to the $V_{REF}$ / $V_{MEAS}$ parameters found in IBIS models and/or noted in Figure 6.

### *Output Delay Measurements*

Output delays are measured using a Tektronix P6245 TDS500/600 probe (< 1 pF) across approximately 4" of FR4 microstrip trace. Standard termination was used for all testing. (See ***Virtex-II Pro Platform FPGA User Guide*** for details.) The propagation delay of the 4" trace is characterized separately and subtracted from the final measurement, and is therefore not included in the generalized test setup shown in Figure 6.

Measurements and test conditions are reflected in the IBIS models except where the IBIS format precludes it. (IBIS models can be found on the web at **http://support.xilinx.com/support/sw_ibis.htm**.) Parameters $V_{REF}$, $R_{REF}$, $C_{REF}$, and $V_{MEAS}$ fully describe the test conditions for each I/O standard. The most accurate prediction of propagation delay in any given application can be obtained through IBIS simulation, using the following method:

1. Simulate the output driver of choice into the generalized test setup, using values from Table 40.
2. Record the time to $V_{MEAS}$.
3. Simulate the output driver of choice into the actual PCB trace and load, using the appropriate IBIS model or capacitance value to represent the load.
4. Record the time to $V_{MEAS}$.
5. Compare the results of steps 2 and 4. The increase or decrease in delay should be added to or subtracted from the I/O Output Standard Adjustment value (Table 38) to yield the actual worst-case propagation delay (clock-to-input) of the PCB trace.

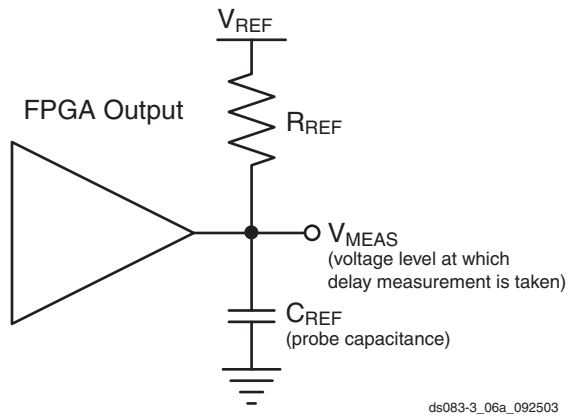


*Figure 6:* **Generalized Test Setup**

*Table 40:* **Output Delay Measurement Methodology**

| Description | IOSTANDARD Attribute | $R_{REF}$ (Ω) | $C_{REF}$(1) (pF) | $V_{MEAS}$ (V) | $V_{REF}$ (V) |
|---|---|---|---|---|---|
| LVTTL (Low-Voltage Transistor-Transistor Logic) | LVTTL (all) | 1M | 0 | 1.65 | 0 |
| LVCMOS (Low-Voltage CMOS ), 3.3V | LVCMOS33 | 1M | 0 | 1.65 | 0 |
| LVCMOS, 2.5V | LVCMOS25 | 1M | 0 | 1.25 | 0 |
| LVCMOS, 1.8V | LVCMOS18 | 1M | 0 | 0.9 | 0 |
| LVCMOS, 1.5V | LVCMOS15 | 1M | 0 | 0.75 | 0 |
| PCI (Peripheral Component Interface), 33 MHz, 3.3V | PCI33_3 (rising edge) | 25 | 10(2) | 0.94 | 0 |
| | PCI33_3 (falling edge) | 25 | 10(2) | 2.03 | 3.3 |
| PCI, 66 MHz, 3.3V | PCI66_3 (rising edge) | 25 | 10(2) | 0.94 | 0 |
| | PCI66_3 (falling edge) | 25 | 10(2) | 2.03 | 3.3 |
| PCI-X, 133 MHz, 3.3V | PCIX (rising edge) | 25 | 10(3) | 0.94 | 0 |
| | PCIX (falling edge | 25 | 10(3) | 2.03 | 3.3 |
| GTL (Gunning Transceiver Logic) | GTL | 25 | 0 | 0.8 | 1.2 |
| GTL Plus | GTLP | 25 | 0 | 1.0 | 1.5 |
| HSTL (High-Speed Transceiver Logic), Class I | HSTL_I | 50 | 0 | $V_{REF}$ | 0.75 |
| HSTL, Class II | HSTL_II | 25 | 0 | $V_{REF}$ | 0.75 |
| HSTL, Class III | HSTL_III | 50 | 0 | 0.9 | 1.5 |
| HSTL, Class IV | HSTL_IV | 25 | 0 | 0.9 | 1.5 |
| HSTL, Class I, 1.8V | HSTL_I_18 | 50 | 0 | $V_{REF}$ | 0.9 |
| HSTL, Class II, 1.8V | HSTL_II_18 | 25 | 0 | $V_{REF}$ | 0.9 |
| HSTL, Class III, 1.8V | HSTL_III_18 | 50 | 0 | 1.1 | 1.8 |
| HSTL, Class IV, 1.8V | HSTL_IV_18 | 25 | 0 | 1.1 | 1.8 |

*Table 40:* **Output Delay Measurement Methodology**

| Description | IOSTANDARD Attribute | $R_{REF}$ (Ω) | $C_{REF}$ (1) (pF) | $V_{MEAS}$ (V) | $V_{REF}$ (V) |
|---|---|---|---|---|---|
| SSTL (Stub Series Terminated Logic), Class I, 1.8V | SSTL18_I | 50 | 0 | $V_{REF}$ | 0.9 |
| SSTL, Class II, 1.8V | SSTL18_II | 25 | 0 | $V_{REF}$ | 0.9 |
| SSTL, Class I, 2.5V | SSTL2_I | 50 | 0 | $V_{REF}$ | 1.25 |
| SSTL, Class II, 2.5V | SSTL2_II | 25 | 0 | $V_{REF}$ | 1.25 |
| LVDS (Low-Voltage Differential Signaling), 2.5V | LVDS_25 | 50 | 0 | $V_{REF}$ | 1.2 |
| LVDSEXT (LVDS Extended Mode), 2.5V | LVDSEXT_25 | 50 | 0 | $V_{REF}$ | 1.2 |
| BLVDS (Bus LVDS), 2.5V | BLVDS_25 | 1M | 0 | 1.2 | 0 |
| LDT (HyperTransport), 2.5V | LDT_25 | 50 | 0 | $V_{REF}$ | 0.6 |
| LVPECL (Low-Voltage Positive Emitter-Coupled Logic), 2.5V | LVPECL_25 | 1M | 0 | 1.23 | 0 |
| LVDCI/HSLVDCI (Low-Voltage Digitally Controlled Impedance), 3.3V | LVDCI_33 | 1M | 0 | 1.65 | 0 |
| LVDCI/HSLVDCI, 2.5V | LVDCI_25 | 1M | 0 | 1.25 | 0 |
| LVDCI/HSLVDCI, 1.8V | LVDCI_18 | 1M | 0 | 0.9 | 0 |
| LVDCI/HSLVDCI, 1.5V | LVDCI_15 | 1M | 0 | 0.75 | 0 |
| HSTL (High-Speed Transceiver Logic), Class I & II, with DCI | HSTL_I_DCI, HSTL_II_DCI | 50 | 0 | $V_{REF}$ | 0.75 |
| HSTL, Class III & IV, with DCI | HSTL_III_DCI, HSTL_IV_DCI | 50 | 0 | 0.9 | 1.5 |
| HSTL, Class I & II, 1.8V, with DCI | HSTL_I_DCI_18, HSTL_II_DCI_18 | 50 | 0 | $V_{REF}$ | 0.9 |
| HSTL, Class III & IV, 1.8V, with DCI | HSTL_III_DCI_18, HSTL_IV_DCI_18 | 50 | 0 | 1.1 | 1.8 |
| SSTL (Stub Series Termi.Logic), Class I & II, 1.8V, with DCI | SSTL18_I_DCI, SSTL18_II_DCI | 50 | 0 | $V_{REF}$ | 0.9 |
| SSTL, Class I & II, 2.5V, with DCI | SSTL2_I_DCI, SSTL2_II_DCI | 50 | 0 | $V_{REF}$ | 1.25 |
| GTL (Gunning Transceiver Logic) with DCI | GTL_DCI | 50 | 0 | 0.8 | 1.2 |
| GTL Plus with DCI | GTLP_DCI | 50 | 0 | 1.0 | 1.5 |

**Notes:**
1. $C_{REF}$ is the capacitance of the probe, nominally 0 pF.
2. Measured as per PCI specification.
3. Measured as per PCI-X specification.

## Clock Distribution Switching Characteristics

*Table 41:* **Clock Distribution Switching Characteristics**

| Description | Symbol | Speed Grade | | | Units |
|---|---|---|---|---|---|
| | | -7 | -6 | -5 | |
| Global Clock Buffer I input to O output | $T_{GIO}$ | 0.05 | 0.057 | 0.064 | ns, max |
| Global Clock Buffer S input Setup/Hold to I1 an I2 inputs | $T_{GSI}/T_{GIS}$ | 0.49/–0.10 | 0.54/–0.12 | 0.60/–0.13 | ns, max |

## CLB Switching Characteristics

Delays originating at F/G inputs vary slightly according to the input used (see Figure 34 in Module 2). The values listed below are worst-case. Precise values are provided by the timing analyzer.

*Table 42:* **CLB Switching Characteristics**

| Description | Symbol | Speed Grade | | | Units |
|---|---|---|---|---|---|
| | | -7 | -6 | -5 | |
| **Combinatorial Delays** | | | | | |
| 4-input function: F/G inputs to X/Y outputs | $T_{ILO}$ | 0.28 | 0.32 | 0.36 | ns, max |
| 5-input function: F/G inputs to F5 output | $T_{IF5}$ | 0.59 | 0.65 | 0.73 | ns, max |
| 5-input function: F/G inputs to X output | $T_{IF5X}$ | 0.63 | 0.70 | 0.79 | ns, max |
| FXINA or FXINB inputs to Y output via MUXFX | $T_{IFXY}$ | 0.29 | 0.32 | 0.36 | ns, max |
| FXINA input to FX output via MUXFX | $T_{INAFX}$ | 0.29 | 0.32 | 0.36 | ns, max |
| FXINB input to FX output via MUXFX | $T_{INBFX}$ | 0.29 | 0.32 | 0.36 | ns, max |
| SOPIN input to SOPOUT output via ORCY | $T_{SOPSOP}$ | 0.11 | 0.13 | 0.14 | ns, max |
| Incremental delay routing through transparent latch to XQ/YQ outputs | $T_{IFNCTL}$ | 0.23 | 0.24 | 0.27 | ns, max |
| **Sequential Delays** | | | | | |
| FF Clock CLK to XQ/YQ outputs | $T_{CKO}$ | 0.37 | 0.38 | 0.42 | ns, max |
| Latch Clock CLK to XQ/YQ outputs | $T_{CKLO}$ | 0.54 | 0.57 | 0.64 | ns, max |
| **Setup and Hold Times Before/After Clock CLK** | | | | | |
| BX/BY inputs | $T_{DICK}/T_{CKDI}$ | 0.21/–0.04 | 0.24/–0.05 | 0.27/–0.06 | ns, min |
| DY inputs | $T_{DYCK}/T_{CKDY}$ | 0.00/ 0.12 | 0.00/ 0.14 | 0.00/ 0.15 | ns, min |
| DX inputs | $T_{DXCK}/T_{CKDX}$ | 0.00/ 0.12 | 0.00/ 0.14 | 0.00/ 0.15 | ns, min |
| CE input | $T_{CECK}/T_{CKCE}$ | 0.27/ 0.01 | 0.34/ 0.01 | 0.47/ 0.01 | ns, min |
| SR/BY inputs (synchronous) | $T_{RCK}/T_{CKR}$ | 0.55/–0.01 | 0.60/–0.01 | 0.78/–0.01 | ns, min |
| **Clock CLK** | | | | | |
| Minimum Pulse Width, High | $T_{CH}$ | 0.37 | 0.40 | 0.45 | ns, min |
| Minimum Pulse Width, Low | $T_{CL}$ | 0.37 | 0.40 | 0.45 | ns, min |
| **Set/Reset** | | | | | |
| Minimum Pulse Width, SR/BY inputs (asynchronous) | $T_{RPW}$ | 0.37 | 0.40 | 0.45 | ns, min |
| Delay from SR/BY inputs to XQ/YQ outputs (asynchronous) | $T_{RQ}$ | 1.09 | 1.25 | 1.40 | ns, max |
| Toggle Frequency (for export control) | $F_{TOG}$ | 1350 | 1200 | 1050 | MHz |

**Notes:**
1. A Zero “0” Hold Time listing indicates no hold time or a negative hold time. Negative values can not be guaranteed “best-case”, but if a “0” is listed, there is no positive hold time.

## CLB Distributed RAM Switching Characteristics

*Table 43:* **CLB Distributed RAM Switching Characteristics**

| | | Speed Grade | | | |
|---|---|---|---|---|---|
| **Description** | **Symbol** | **-7** | **-6** | **-5** | **Units** |
| **Sequential Delays** | | | | | |
| Clock CLK to X/Y outputs (WE active) in 16 x 1 mode | $T_{SHCKO16}$ | 1.25 | 1.38 | 1.54 | ns, max |
| Clock CLK to X/Y outputs (WE active) in 32 x 1 mode | $T_{SHCKO32}$ | 1.57 | 1.75 | 1.95 | ns, max |
| Clock CLK to F5 output | $T_{SHCKOF5}$ | 1.52 | 1.68 | 1.88 | ns, max |
| **Setup and Hold Times Before/After Clock CLK** | | | | | |
| BX/BY data inputs (DIN) | $T_{DS}/T_{DH}$ | 0.38/–0.07 | 0.41/–0.07 | 0.46/–0.08 | ns, min |
| F/G address inputs | $T_{AS}/T_{AH}$ | 0.42/ 0.00 | 0.47/ 0.00 | 0.52/ 0.00 | ns, min |
| SR input | $T_{WES}/T_{WEH}$ | 0.22/ 0.04 | 0.24/ 0.05 | 0.26/ 0.05 | ns, min |
| **Clock CLK** | | | | | |
| Minimum Pulse Width, High | $T_{WPH}$ | 0.63 | 0.72 | 0.79 | ns, min |
| Minimum Pulse Width, Low | $T_{WPL}$ | 0.63 | 0.72 | 0.79 | ns, min |
| Minimum clock period to meet address write cycle time | $T_{WC}$ | 1.25 | 1.44 | 1.58 | ns, min |

**Notes:**
1. A Zero “0” Hold Time listing indicates no hold time or a negative hold time. Negative values cannot be guaranteed “best-case”, but if a “0” is listed, there is no positive hold time.

## CLB Shift Register Switching Characteristics

*Table 44:* **CLB Shift Register Switching Characteristics**

| | | Speed Grade | | | |
|---|---|---|---|---|---|
| **Description** | **Symbol** | **-7** | **-6** | **-5** | **Units** |
| **Sequential Delays** | | | | | |
| Clock CLK to X/Y outputs | $T_{REG}$ | 2.78 | 3.12 | 3.49 | ns, max |
| Clock CLK to X/Y outputs | $T_{REG32}$ | 3.10 | 3.49 | 3.90 | ns, max |
| Clock CLK to XB output via MC15 LUT output | $T_{REGXB}$ | 2.84 | 3.18 | 3.55 | ns, max |
| Clock CLK to YB output via MC15 LUT output | $T_{REGYB}$ | 2.55 | 2.88 | 3.21 | ns, max |
| Clock CLK to Shiftout | $T_{CKSH}$ | 2.50 | 2.83 | 3.15 | ns, max |
| Clock CLK to F5 output | $T_{REGF5}$ | 3.05 | 3.42 | 3.83 | ns, max |
| **Setup and Hold Times Before/After Clock CLK** | | | | | |
| BX/BY data inputs (DIN) | $T_{SRLDS}/T_{SRLDH}$ | 0.70/–0.16 | 0.77/–0.18 | 0.98/–0.21 | ns, min |
| SR input | $T_{WSS}/T_{WSH}$ | 0.27/ 0.01 | 0.34/ 0.01 | 0.47/ 0.01 | ns, min |
| **Clock CLK** | | | | | |
| Minimum Pulse Width, High | $T_{SRPH}$ | 0.63 | 0.72 | 0.79 | ns, min |
| Minimum Pulse Width, Low | $T_{SRPL}$ | 0.63 | 0.72 | 0.79 | ns, min |

**Notes:**
1. A Zero “0” Hold Time listing indicates no hold time or a negative hold time. Negative values cannot be guaranteed “best-case”, but if a “0” is listed, there is no positive hold time.

## Multiplier Switching Characteristics

*Table 45:* **Multiplier Switching Characteristics**

| | | Speed Grade | | | |
|---|---|---|---|---|---|
| **Description** | **Symbol** | **-7** | **-6** | **-5** | **Units** |
| **Propagation Delay to Output Pin** | | | | | |
| Input to Pin35 | $T_{MULT_P35}$ | 4.08 | 4.64 | 5.19 | ns, max |
| Input to Pin34 | $T_{MULT_P34}$ | 3.99 | 4.55 | 5.09 | ns, max |
| Input to Pin33 | $T_{MULT_P33}$ | 3.90 | 4.45 | 4.99 | ns, max |
| Input to Pin32 | $T_{MULT_P32}$ | 3.80 | 4.36 | 4.88 | ns, max |
| Input to Pin31 | $T_{MULT_P31}$ | 3.71 | 4.27 | 4.78 | ns, max |
| Input to Pin30 | $T_{MULT_P30}$ | 3.62 | 4.17 | 4.67 | ns, max |
| Input to Pin29 | $T_{MULT_P29}$ | 3.53 | 4.08 | 4.57 | ns, max |
| Input to Pin28 | $T_{MULT_P28}$ | 3.43 | 3.99 | 4.46 | ns, max |
| Input to Pin27 | $T_{MULT_P27}$ | 3.34 | 3.89 | 4.36 | ns, max |
| Input to Pin26 | $T_{MULT_P26}$ | 3.25 | 3.80 | 4.26 | ns, max |
| Input to Pin25 | $T_{MULT_P25}$ | 3.16 | 3.71 | 4.15 | ns, max |
| Input to Pin24 | $T_{MULT_P24}$ | 3.06 | 3.61 | 4.05 | ns, max |
| Input to Pin23 | $T_{MULT_P23}$ | 2.97 | 3.52 | 3.94 | ns, max |
| Input to Pin22 | $T_{MULT_P22}$ | 2.88 | 3.43 | 3.84 | ns, max |
| Input to Pin21 | $T_{MULT_P21}$ | 2.79 | 3.34 | 3.73 | ns, max |
| Input to Pin20 | $T_{MULT_P20}$ | 2.70 | 3.24 | 3.63 | ns, max |
| Input to Pin19 | $T_{MULT_P19}$ | 2.60 | 3.15 | 3.53 | ns, max |
| Input to Pin18 | $T_{MULT_P18}$ | 2.51 | 3.06 | 3.42 | ns, max |
| Input to Pin17 | $T_{MULT_P17}$ | 2.42 | 2.96 | 3.32 | ns, max |
| Input to Pin16 | $T_{MULT_P16}$ | 2.34 | 2.86 | 3.21 | ns, max |
| Input to Pin15 | $T_{MULT_P15}$ | 2.27 | 2.76 | 3.09 | ns, max |
| Input to Pin14 | $T_{MULT_P14}$ | 2.19 | 2.67 | 2.98 | ns, max |
| Input to Pin13 | $T_{MULT_P13}$ | 2.12 | 2.57 | 2.87 | ns, max |
| Input to Pin12 | $T_{MULT_P12}$ | 2.04 | 2.47 | 2.76 | ns, max |
| Input to Pin11 | $T_{MULT_P11}$ | 1.96 | 2.37 | 2.65 | ns, max |
| Input to Pin10 | $T_{MULT_P10}$ | 1.89 | 2.27 | 2.54 | ns, max |
| Input to Pin9 | $T_{MULT_P9}$ | 1.81 | 2.17 | 2.43 | ns, max |
| Input to Pin8 | $T_{MULT_P8}$ | 1.74 | 2.07 | 2.32 | ns, max |
| Input to Pin7 | $T_{MULT_P7}$ | 1.66 | 1.97 | 2.21 | ns, max |
| Input to Pin6 | $T_{MULT_P6}$ | 1.59 | 1.87 | 2.09 | ns, max |
| Input to Pin5 | $T_{MULT_P5}$ | 1.51 | 1.77 | 1.98 | ns, max |
| Input to Pin4 | $T_{MULT_P4}$ | 1.44 | 1.67 | 1.87 | ns, max |
| Input to Pin3 | $T_{MULT_P3}$ | 1.36 | 1.57 | 1.76 | ns, max |
| Input to Pin2 | $T_{MULT_P2}$ | 1.28 | 1.47 | 1.65 | ns, max |
| Input to Pin1 | $T_{MULT_P1}$ | 1.21 | 1.37 | 1.54 | ns, max |
| Input to Pin0 | $T_{MULT_P0}$ | 1.13 | 1.27 | 1.43 | ns, max |

*Table 46:* **Pipelined Multiplier Switching Characteristics**

| Description | Symbol | Speed Grade | | | Units |
|---|---|---|---|---|---|
| | | -7 | -6 | -5 | |
| **Setup and Hold Times Before/After Clock** | | | | | |
| Data Inputs | $T_{MULIDCK}/T_{MULCKID}$ | 1.86/ 0.00 | 2.06/ 0.00 | 2.31/ 0.00 | ns, max |
| Clock Enable | $T_{MULIDCK_CE}/T_{MULCKID_CE}$ | 0.23/ 0.00 | 0.25/ 0.00 | 0.28/ 0.00 | ns, max |
| Reset | $T_{MULIDCK_RST}/T_{MULCKID_RST}$ | 0.21/–0.09 | 0.24/–0.09 | 0.26/–0.10 | ns, max |
| **Clock to Output Pin** | | | | | |
| Clock to Pin35 | $T_{MULTCK_P35}$ | 2.45 | 2.92 | 3.27 | ns, max |
| Clock to Pin34 | $T_{MULTCK_P34}$ | 2.36 | 2.82 | 3.16 | ns, max |
| Clock to Pin33 | $T_{MULTCK_P33}$ | 2.28 | 2.72 | 3.05 | ns, max |
| Clock to Pin32 | $T_{MULTCK_P32}$ | 2.20 | 2.62 | 2.93 | ns, max |
| Clock to Pin31 | $T_{MULTCK_P31}$ | 2.12 | 2.52 | 2.82 | ns, max |
| Clock to Pin30 | $T_{MULTCK_P30}$ | 2.03 | 2.42 | 2.71 | ns, max |
| Clock to Pin29 | $T_{MULTCK_P29}$ | 1.95 | 2.32 | 2.60 | ns, max |
| Clock to Pin28 | $T_{MULTCK_P28}$ | 1.87 | 2.22 | 2.48 | ns, max |
| Clock to Pin27 | $T_{MULTCK_P27}$ | 1.79 | 2.12 | 2.37 | ns, max |
| Clock to Pin26 | $T_{MULTCK_P26}$ | 1.70 | 2.02 | 2.26 | ns, max |
| Clock to Pin25 | $T_{MULTCK_P25}$ | 1.62 | 1.92 | 2.15 | ns, max |
| Clock to Pin24 | $T_{MULTCK_P24}$ | 1.54 | 1.82 | 2.03 | ns, max |
| Clock to Pin23 | $T_{MULTCK_P23}$ | 1.46 | 1.71 | 1.92 | ns, max |
| Clock to Pin22 | $T_{MULTCK_P22}$ | 1.37 | 1.61 | 1.81 | ns, max |
| Clock to Pin21 | $T_{MULTCK_P21}$ | 1.29 | 1.51 | 1.69 | ns, max |
| Clock to Pin20 | $T_{MULTCK_P20}$ | 1.21 | 1.41 | 1.58 | ns, max |
| Clock to Pin19 | $T_{MULTCK_P19}$ | 1.13 | 1.31 | 1.47 | ns, max |
| Clock to Pin18 | $T_{MULTCK_P18}$ | 1.04 | 1.21 | 1.36 | ns, max |
| Clock to Pin17 | $T_{MULTCK_P17}$ | 0.96 | 1.11 | 1.24 | ns, max |
| Clock to Pin16 | $T_{MULTCK_P16}$ | 0.88 | 1.01 | 1.13 | ns, max |
| Clock to Pin15 | $T_{MULTCK_P15}$ | 0.80 | 0.91 | 1.02 | ns, max |
| Clock to Pin14 | $T_{MULTCK_P14}$ | 0.71 | 0.81 | 0.91 | ns, max |
| Clock to Pin13 | $T_{MULTCK_P13}$ | 0.63 | 0.71 | 0.79 | ns, max |
| Clock to Pin12 | $T_{MULTCK_P12}$ | 0.63 | 0.71 | 0.79 | ns, max |
| Clock to Pin11 | $T_{MULTCK_P11}$ | 0.63 | 0.71 | 0.79 | ns, max |
| Clock to Pin10 | $T_{MULTCK_P10}$ | 0.63 | 0.71 | 0.79 | ns, max |
| Clock to Pin9 | $T_{MULTCK_P9}$ | 0.63 | 0.71 | 0.79 | ns, max |
| Clock to Pin8 | $T_{MULTCK_P8}$ | 0.63 | 0.71 | 0.79 | ns, max |
| Clock to Pin7 | $T_{MULTCK_P7}$ | 0.63 | 0.71 | 0.79 | ns, max |
| Clock to Pin6 | $T_{MULTCK_P6}$ | 0.63 | 0.71 | 0.79 | ns, max |
| Clock to Pin5 | $T_{MULTCK_P5}$ | 0.63 | 0.71 | 0.79 | ns, max |
| Clock to Pin4 | $T_{MULTCK_P4}$ | 0.63 | 0.71 | 0.79 | ns, max |
| Clock to Pin3 | $T_{MULTCK_P3}$ | 0.63 | 0.71 | 0.79 | ns, max |
| Clock to Pin2 | $T_{MULTCK_P2}$ | 0.63 | 0.71 | 0.79 | ns, max |
| Clock to Pin1 | $T_{MULTCK_P1}$ | 0.63 | 0.71 | 0.79 | ns, max |
| Clock to Pin0 | $T_{MULTCK_P0}$ | 0.63 | 0.71 | 0.79 | ns, max |

## Block SelectRAM+ Switching Characteristics

*Table 47:* **Block SelectRAM+ Switching Characteristics**

| | | Speed Grade | | | |
|---|---|---|---|---|---|
| **Description** | **Symbol** | **-7** | **-6** | **-5** | **Units** |
| **Sequential Delays** | | | | | |
| Clock CLK to DOUT output | $T_{BCKO}$ | 1.41 | 1.50 | 1.68 | ns, max |
| **Setup and Hold Times Before Clock CLK** | | | | | |
| ADDR inputs | $T_{BACK}/T_{BCKA}$ | 0.27/ 0.22 | 0.31/ 0.25 | 0.35/ 0.28 | ns, min |
| DIN inputs | $T_{BDCK}/T_{BCKD}$ | 0.20/ 0.22 | 0.23/ 0.25 | 0.26/ 0.28 | ns, min |
| EN input | $T_{BECK}/T_{BCKE}$ | 0.28/ 0.00 | 0.32/ 0.00 | 0.35/ 0.00 | ns, min |
| RST input | $T_{BRCK}/T_{BCKR}$ | 0.28/ 0.00 | 0.32/ 0.00 | 0.35/ 0.00 | ns, min |
| WEN input | $T_{BWCK}/T_{BCKW}$ | 0.33/ 0.00 | 0.35/ 0.00 | 0.39/ 0.00 | ns, min |
| **Clock CLK** | | | | | |
| CLKA to CLKB setup time for different ports | $T_{BCCS}$ | 1.0 | 1.0 | 1.0 | ns, min |
| Minimum Pulse Width, High | $T_{BPWH}$ | 1.17 | 1.30 | 1.50 | ns, min |
| Minimum Pulse Width, Low | $T_{BPWL}$ | 1.17 | 1.30 | 1.50 | ns, min |

**Notes:**
1. A Zero “0” Hold Time listing indicates no hold time or a negative hold time. Negative values can not be guaranteed “best-case”, but if a “0” is listed, there is no positive hold time.

## TBUF Switching Characteristics

*Table 48:* **TBUF Switching Characteristics**

| | | Speed Grade | | | |
|---|---|---|---|---|---|
| **Description** | **Symbol** | **-7** | **-6** | **-5** | **Units** |
| **Combinatorial Delays** | | | | | |
| IN input to OUT output | $T_{IO}$ | 0.88 | 1.01 | 1.12 | ns, max |
| TRI input to OUT output high-impedance | $T_{OFF}$ | 0.48 | 0.55 | 0.61 | ns, max |
| TRI input to valid data on OUT output | $T_{ON}$ | 0.48 | 0.55 | 0.61 | ns, max |

## Configuration Timing

### *Configuration Memory Clearing Parameters*

Power-up timing of configuration signals is shown in Figure 7; corresponding timing characteristics are listed in Table 49.

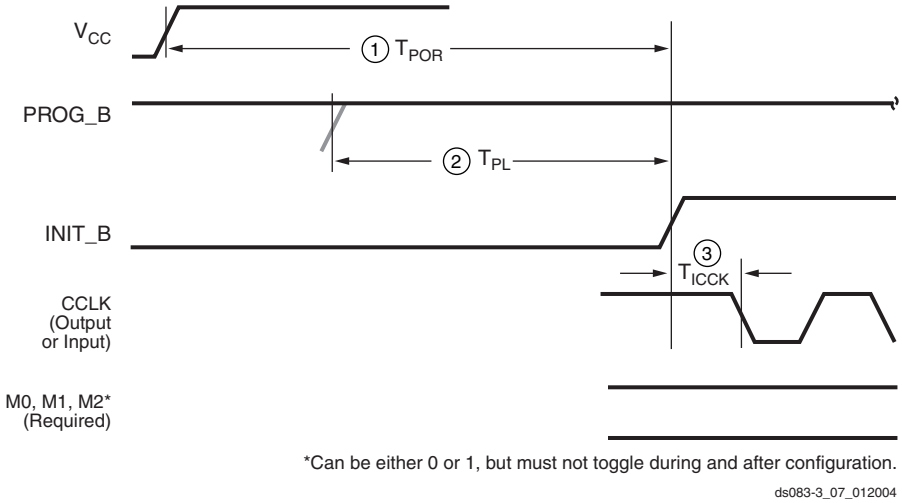


*Figure 7:* **Configuration Power-Up Timing**

*Table 49:* **Power-Up Timing Characteristics**

| Description | Figure References | Symbol | Value | Units |
|---|---|---|---|---|
| Power-on reset | 1 | $T_{POR}$ | $T_{PL}$ + 2 | ms, max |
| Program latency | 2 | $T_{PL}$ | 4 | µs per frame, max |
| CCLK (output) delay | 3 | $T_{ICCK}$ | 0.25 | µs, min |
| | | | 4.00 | µs, max |
| Program pulse width | | $T_{PROGRAM}$ | 300 | ns, min |

**Notes:**
1. The M2, M1, and M0 mode pins should be set at a constant DC voltage level, either through pull-up or pull-down resistors, or tied directly to ground or $V_{CCAUX}$. The mode pins should not be toggled during and after configuration.

### *Master/Slave Serial Mode Parameters*

Clock timing for Slave Serial configuration programming is shown in Figure 8, with Master Serial clock timing shown in Figure 9. Programming parameters for both Slave and Master modes are given in Table 50.

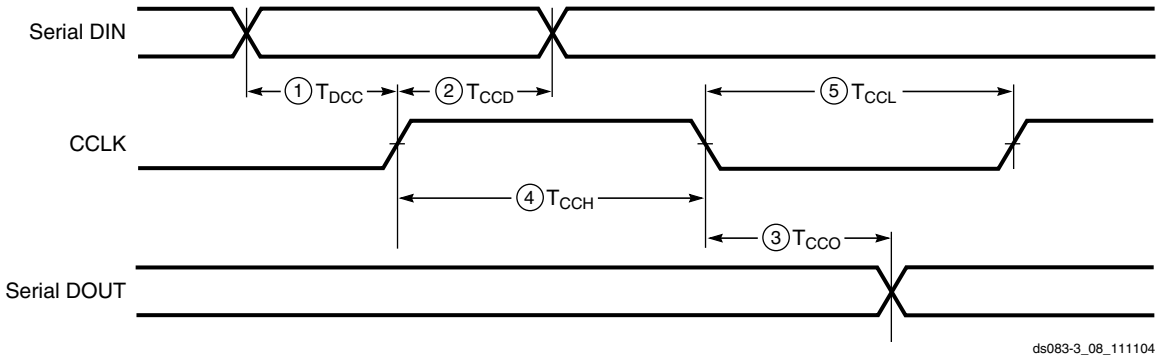


*Figure 8:* **Slave Serial Mode Timing Sequence**

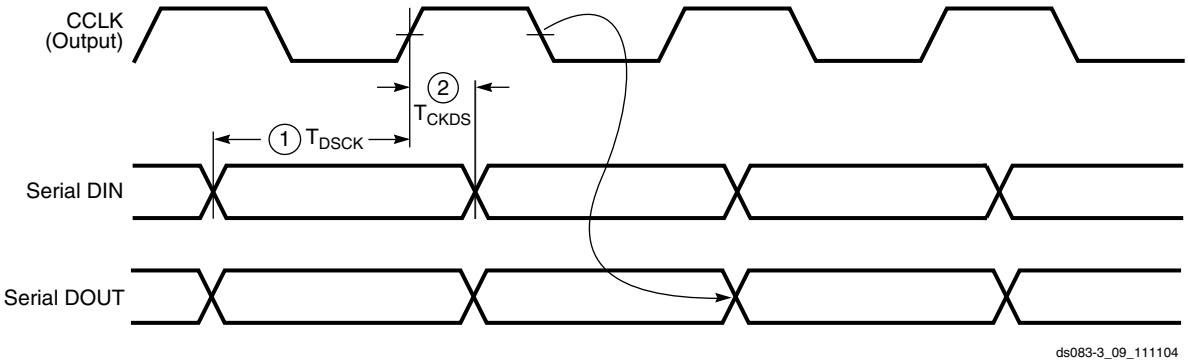


*Figure 9:* **Master Serial Mode Timing Sequence**

*Table 50:* **Master/Slave Serial Mode Timing Characteristics**

| | Description | Figure References | Symbol | Value | Units |
|---|---|---|---|---|---|
| CCLK | DIN setup/hold, slave mode (Figure 8) | 1/2 | $T_{DCC}/T_{CCD}$ | 5.0/0.0 | ns, min |
| | DIN setup/hold, master mode (Figure 9) | 1/2 | $T_{DSCK}/T_{CKDS}$ | 5.0/0.0 | ns, min |
| | DOUT | 3 | $T_{CCO}$ | 12.0 | ns, max |
| | High time | 4 | $T_{CCH}$ | 5.0 | ns, min |
| | Low time | 5 | $T_{CCL}$ | 5.0 | ns, min |
| | Maximum start-up frequency | | $F_{CC_STARTUP}$ | 50 | MHz, max |
| | Maximum frequency | | $F_{CC_SERIAL}$ | 66 (1) | MHz, max |
| | Frequency tolerance, master mode with respect to nominal | | | +45%<br>–30% | |

**Notes:**
1. If no provision is made in the design to adjust the frequency of CCLK, $F_{CC_SERIAL}$ should not exceed $F_{CC_STARTUP}$.

### *Master/Slave SelectMAP Parameters*

Figure 10 is a generic timing diagram for data loading using SelectMAP. For other data loading diagrams, refer to the ***Virtex-II Pro Platform FPGA User Guide***.

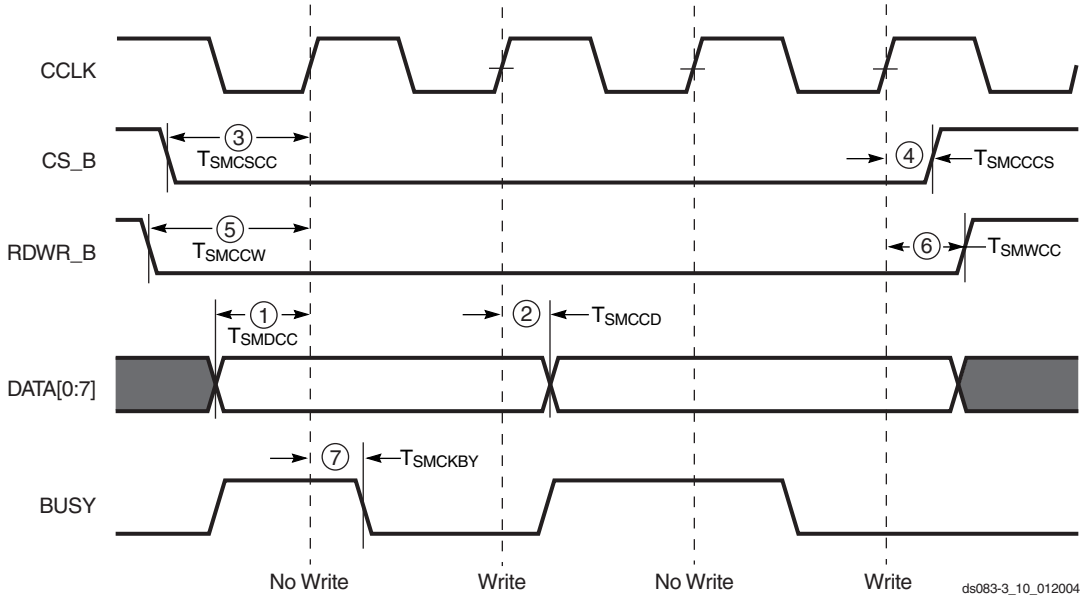


*Figure 10:* **SelectMAP Mode Data Loading Sequence (Generic)**

*Table 51:* **SelectMAP Mode Write Timing Characteristics**

| | Description | Device | Figure References | Symbol | Value | Units |
|---|---|---|---|---|---|---|
| CCLK | DATA[0:7] setup/hold | XC2VP2 | 1/2 | $T_{SMDCC}/T_{SMCCD}$ | 5.0/0.0 | ns, min |
| | | XC2VP4 | | | 5.0/0.0 | ns, min |
| | | XC2VP7 | | | 5.0/0.0 | ns, min |
| | | XC2VP20 | | | 5.0/0.0 | ns, min |
| | | XC2VPX20 | | | 5.0/0.0 | ns, min |
| | | XC2VP30 | | | 5.0/0.0 | ns, min |
| | | XC2VP40 | | | 5.0/0.0 | ns, min |
| | | XC2VP50 | | | 5.0/0.0 | ns, min |
| | | XC2VP70 | | | 6.0/0.0 | ns, min |
| | | XC2VPX70 | | | 6.0/0.0 | ns, min |
| | | XC2VP100 | | | 7.5/0.0 | ns, min |
| | CS_B setup/hold | | 3/4 | $T_{SMCSCC}/T_{SMCCCS}$ | 7.0/0.0 | ns, min |
| | RDWR_B setup/hold | | 5/6 | $T_{SMCCW}/T_{SMWCC}$ | 7.0/0.0 | ns, min |
| | BUSY propagation delay | | 7 | $T_{SMCKBY}$ | 12.0 | ns, max |
| | Maximum start-up frequency | | | $F_{CC_STARTUP}$ | 50 | MHz, max |
| | Maximum frequency | | | $F_{CC_SELECTMAP}$ | 50 | MHz, max |
| | Maximum frequency with no handshake | | | $F_{CCNH}$ | 50 | MHz, max |

## JTAG Test Access Port Switching Characteristics

Characterization data for some of the most commonly requested timing parameters shown in Figure 11 is listed in Table 52.

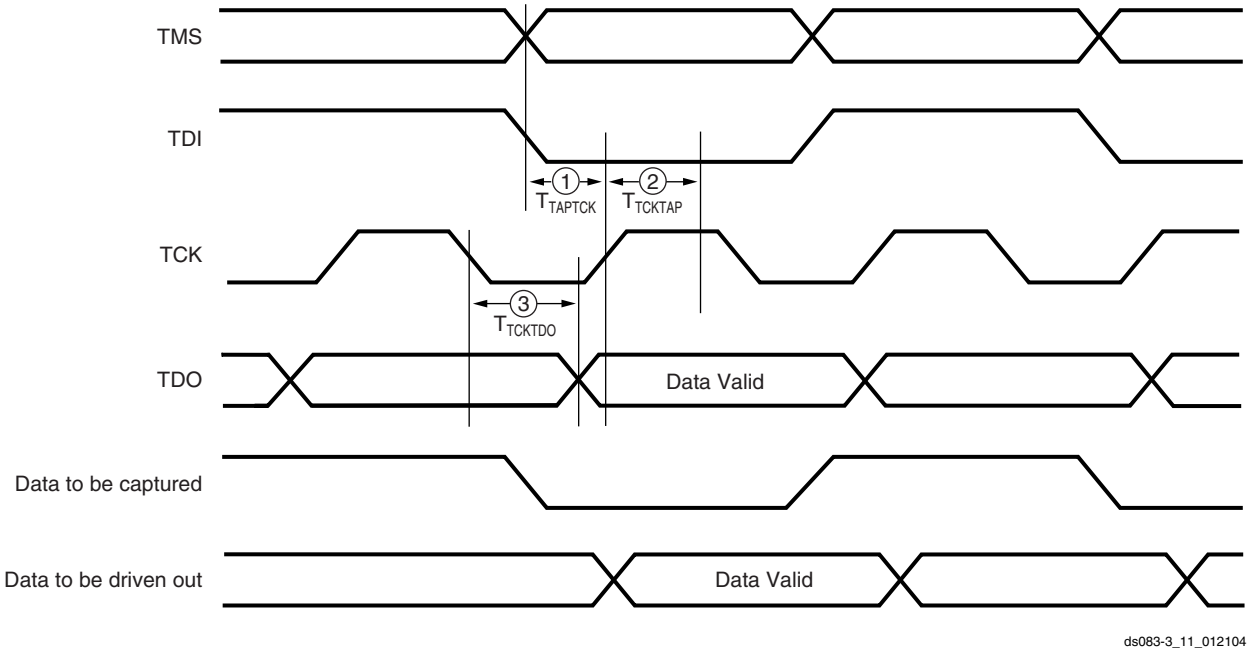


*Figure 11:* **Virtex-II Pro Boundary Scan Port Timing Waveforms**

*Table 52:* **Boundary-Scan Port Timing Specifications**

| | Description | Figure References | Symbol | Value | Units |
|---|---|---|---|---|---|
| TCK | TMS and TDI setup time | 1 | $T_{TAPTCK}$ | 5.5 | ns, min |
| | TMS and TDI hold times | 2 | $T_{TCKTAP}$ | 2.0 | ns, min |
| | Falling edge to TDO output valid | 3 | $T_{TCKTDO}$ | 11.0 | ns, max |
| | Maximum frequency | | $F_{TCK}$ | 33.0 | MHz, max |

## Virtex-II Pro Pin-to-Pin Output Parameter Guidelines

All devices are 100% functionally tested. Listed below are representative values for typical pin locations and normal clock loading. Values are expressed in nanoseconds unless otherwise noted.

### Global Clock Input to Output Delay for LVCMOS25, 12 mA, Fast Slew Rate, *With* DCM

*Table 53:* **Global Clock Input to Output Delay for LVCMOS25, 12 mA, Fast Slew Rate, *With* DCM**

| | | | Speed Grade | | | |
|---|---|---|---|---|---|---|
| **Description** | **Symbol** | **Device** | **-7** | **-6** | **-5** | **Units** |
| LVCMOS25 Global Clock Input to Output Delay using Output Flip-flop, 12 mA, Fast Slew Rate, *with* DCM.<br>For data *output* with different standards, adjust the delays with the values shown in IOB Output Switching Characteristics Standard Adjustments, page 28. | | | | | | |
| Global Clock and OFF with DCM | $T_{ICKOFDCM}$ | XC2VP2 | 1.55 | 1.59 | 1.62 | ns |
| | | XC2VP4 | 1.58 | 1.61 | 1.65 | ns |
| | | XC2VP7 | 1.63 | 1.68 | 1.72 | ns |
| | | XC2VP20 | 1.68 | 1.74 | 1.79 | ns |
| | | XC2VPX20 | 1.68 | 1.74 | 1.79 | ns |
| | | XC2VP30 | 1.68 | 1.75 | 1.80 | ns |
| | | XC2VP40 | 1.71 | 1.86 | 1.92 | ns |
| | | XC2VP50 | 1.80 | 2.00 | 2.07 | ns |
| | | XC2VP70 | 1.87 | 2.07 | 2.24 | ns |
| | | XC2VPX70 | 1.87 | 2.07 | 2.24 | ns |
| | | XC2VP100 | N/A | 2.38 | 2.45 | ns |

**Notes:**
1. Listed above are representative values where one global clock input drives one vertical clock line in each accessible column, and where all accessible IOB and CLB flip-flops are clocked by the global clock net.
2. Output timing is measured at 50% $V_{CC}$ threshold with test setup shown in Figure 6. For other I/O standards, see Table 40.
3. DCM output jitter is already included in the timing calculation.

## Global Clock Input to Output Delay for LVCMOS25, 12 mA, Fast Slew Rate, *Without* DCM

*Table 54:* **Global Clock Input to Output Delay for LVCMOS25, 12 mA, Fast Slew Rate, *Without* DCM**

| | | | Speed Grade | | | |
|---|---|---|---|---|---|---|
| **Description** | **Symbol** | **Device** | **-7** | **-6** | **-5** | **Units** |
| LVCMOS25 Global Clock Input to Output Delay using Output Flip-flop, 12 mA, Fast Slew Rate, *without* DCM.<br>For data *output* with different standards, adjust the delays with the values shown in IOB Output Switching Characteristics Standard Adjustments, page 28. | | | | | | |
| Global Clock and OFF without DCM | $T_{ICKOF}$ | XC2VP2 | 3.19 | 3.52 | 3.82 | ns |
| | | XC2VP4 | 3.39 | 3.91 | 4.27 | ns |
| | | XC2VP7 | 3.59 | 4.00 | 4.36 | ns |
| | | XC2VP20 | 3.62 | 4.08 | 4.46 | ns |
| | | XC2VPX20 | 3.62 | 4.08 | 4.46 | ns |
| | | XC2VP30 | 3.73 | 4.12 | 4.50 | ns |
| | | XC2VP40 | 3.89 | 4.28 | 4.67 | ns |
| | | XC2VP50 | 4.00 | 4.43 | 4.84 | ns |
| | | XC2VP70 | 4.38 | 4.87 | 5.33 | ns |
| | | XC2VPX70 | 4.38 | 4.87 | 5.33 | ns |
| | | XC2VP100 | N/A | 5.32 | 5.82 | ns |

**Notes:**
1. Listed above are representative values where one global clock input drives one vertical clock line in each accessible column, and where all accessible IOB and CLB flip-flops are clocked by the global clock net.
2. Output timing is measured at 50% $V_{CC}$ threshold with test setup shown in Figure 6. For other I/O standards, see Table 40.
3. DCM output jitter is already included in the timing calculation.

## Virtex-II Pro Pin-to-Pin Input Parameter Guidelines

All devices are 100% functionally tested. Listed below are representative values for typical pin locations and normal clock loading. Values are expressed in nanoseconds unless otherwise noted

### Global Clock Set-Up and Hold for LVCMOS25 Standard, *With* DCM

*Table 55:* **Global Clock Set-Up and Hold for LVCMOS25 Standard, *With* DCM**

| | | | Speed Grade | | | |
|---|---|---|---|---|---|---|
| **Description** | **Symbol** | **Device** | **-7** | **-6** | **-5** | **Units** |
| Input Setup and Hold Time Relative to Global Clock Input Signal for LVCMOS25 Standard.(1)<br>For data input with different standards, adjust the setup time delay by the values shown in IOB Input Switching Characteristics Standard Adjustments, page 25. | | | | | | |
| No Delay<br>Global Clock and IFF(2) with DCM | $T_{PSDCM}/T_{PHDCM}$ | XC2VP2 | 1.54/–0.58 | 1.54/–0.57 | 1.54/–0.56 | ns |
| | | XC2VP4 | 1.59/–0.59 | 1.59/–0.58 | 1.59/–0.57 | ns |
| | | XC2VP7 | 1.66/–0.61 | 1.66/–0.59 | 1.66/–0.57 | ns |
| | | XC2VP20 | 1.68/–0.53 | 1.68/–0.53 | 1.68/–0.50 | ns |
| | | XC2VPX20 | 1.68/–0.53 | 1.68/–0.53 | 1.68/–0.50 | ns |
| | | XC2VP30 | 1.81/–0.74 | 1.81/–0.74 | 1.81/–0.71 | ns |
| | | XC2VP40 | 1.85/–0.65 | 1.85/–0.64 | 1.85/–0.60 | ns |
| | | XC2VP50 | 1.85/–0.57 | 1.85/–0.54 | 1.85/–0.50 | ns |
| | | XC2VP70 | 1.86/–0.45 | 1.86/–0.39 | 1.86/–0.30 | ns |
| | | XC2VPX70 | 1.86/–0.45 | 1.86/–0.39 | 1.86/–0.30 | ns |
| | | XC2VP100 | N/A | 1.86/–0.35 | 1.87/–0.28 | ns |

**Notes:**
1. Setup time is measured relative to the Global Clock input signal with the fastest route and the lightest load. Hold time is measured relative to the Global Clock input signal with the slowest route and heaviest load.
2. These measurements include:
   - CLK0 and CLK180 DCM jitter
   - Worst-case duty-cycle distortion using CLK0 and CLK180, $T_{DCD_CLK180}$.
3. IFF = Input Flip-Flop or Latch

## Global Clock Set-Up and Hold for LVCMOS25 Standard, *Without* DCM

*Table 56:* **Global Clock Set-Up and Hold for LVCMOS25 Standard, *Without* DCM**

| | | | Speed Grade | | | |
|---|---|---|---|---|---|---|
| **Description** | **Symbol** | **Device** | **-7** | **-6** | **-5** | **Units** |
| Input Setup and Hold Time Relative to Global Clock Input Signal for LVCMOS25 Standard.<br>For data input with different standards, adjust the setup time delay by the values shown in IOB Input Switching Characteristics Standard Adjustments, page 25. | | | | | | |
| Full Delay<br>Global Clock and IFF without DCM | $T_{PSFD}/T_{PHFD}$ | XC2VP2 | 1.80/–0.44 | 1.85/–0.41 | 1.96/–0.43 | ns |
| | | XC2VP4 | 1.82/–0.53 | 1.83/–0.31 | 1.90/–0.29 | ns |
| | | XC2VP7 | 1.80/–0.34 | 1.81/–0.24 | 1.88/–0.19 | ns |
| | | XC2VP20 | 1.76/–0.24 | 1.83/–0.17 | 1.92/–0.15 | ns |
| | | XC2VPX20 | 1.76/–0.24 | 1.83/–0.17 | 1.92/–0.15 | ns |
| | | XC2VP30 | 1.75/–0.22 | 1.92/–0.26 | 1.99/–0.23 | ns |
| | | XC2VP40 | 2.25/–0.54 | 2.40/–0.56 | 2.49/–0.54 | ns |
| | | XC2VP50 | 2.93/–1.02 | 2.98/–0.93 | 3.00/–0.83 | ns |
| | | XC2VP70 | 2.79/–0.72 | 2.79/–0.55 | 2.78/–0.41 | ns |
| | | XC2VPX70 | 2.79/–0.72 | 2.79/–0.55 | 2.78/–0.41 | ns |
| | | XC2VP100 | N/A | 5.58/–2.35 | 5.60/–2.35 | ns |

**Notes:**
1. IFF = Input Flip-Flop or Latch
2. Setup time is measured relative to the Global Clock input signal with the fastest route and the lightest load. Hold time is measured relative to the Global Clock input signal with the slowest route and heaviest load.
3. A Zero “0” Hold Time listing indicates no hold time or a negative hold time. Negative values can not be guaranteed “best-case”, but if a “0” is listed, there is no positive hold time.

## DCM Timing Parameters

All devices are 100% functionally tested. Because of the difficulty in directly measuring many internal timing parameters, those parameters are derived from benchmark timing patterns. The following guidelines reflect worst-case values across the recommended operating conditions. All output jitter and phase specifications are determined through statistical measurement at the package pins.

### Operating Frequency Ranges

*Table 57:* **Operating Frequency Ranges**

| | | | Speed Grade | | | |
|---|---|---|---|---|---|---|
| **Description** | **Symbol** | **Constraints** | **-7** | **-6** | **-5** | **Units** |
| **Output Clocks (Low Frequency Mode)** | | | | | | |
| CLK0, CLK90, CLK180, CLK270 | CLKOUT_FREQ_1X_LF_MIN | | 24.00 | 24.00 | 24.00 | MHz |
| | CLKOUT_FREQ_1X_LF_MAX | | 270.00 | 210.00 | 180.00 | MHz |
| CLK2X, CLK2X180(5,6) | CLKOUT_FREQ_2X_LF_MIN | | 48.00 | 48.00 | 48.00 | MHz |
| | CLKOUT_FREQ_2X_LF_MAX | | 450.00 | 420.00 | 360.00 | MHz |
| CLKDV | CLKOUT_FREQ_DV_LF_MIN | | 1.50 | 1.50 | 1.50 | MHz |
| | CLKOUT_FREQ_DV_LF_MAX | | 140.00 | 140.00 | 120.00 | MHz |
| CLKFX, CLKFX180 | CLKOUT_FREQ_FX_LF_MIN | | 24.00 | 24.00 | 24.00 | MHz |
| | CLKOUT_FREQ_FX_LF_MAX | | 240.00 | 240.00 | 210.00 | MHz |
| **Input Clocks (Low Frequency Mode)** | | | | | | |
| CLKIN (using DLL outputs)(1,3,4) | CLKIN_FREQ_DLL_LF_MIN | | 24.00 | 24.00 | 24.00 | MHz |
| | CLKIN_FREQ_DLL_LF_MAX | | 270.00 | 210.00 | 180.00 | MHz |
| CLKIN (using CLKFX outputs)(2,3,4) | CLKIN_FREQ_FX_LF_MIN | | 1.00 | 1.00 | 1.00 | MHz |
| | CLKIN_FREQ_FX_LF_MAX | | 240.00 | 240.00 | 210.00 | MHz |
| PSCLK | PSCLK_FREQ_LF_MIN | | 0.01 | 0.01 | 0.01 | MHz |
| | PSCLK_FREQ_LF_MAX | | 450.00 | 420.00 | 360.00 | MHz |
| **Output Clocks (High Frequency Mode)** | | | | | | |
| CLK0, CLK180(6) | CLKOUT_FREQ_1X_HF_MIN | | 48.00 | 48.00 | 48.00 | MHz |
| | CLKOUT_FREQ_1X_HF_MAX | | 450.00 | 420.00 | 360.00 | MHz |
| CLKDV | CLKOUT_FREQ_DV_HF_MIN | | 3.00 | 3.00 | 3.00 | MHz |
| | CLKOUT_FREQ_DV_HF_MAX | | 280.00 | 280.00 | 240.00 | MHz |
| CLKFX, CLKFX180 | CLKOUT_FREQ_FX_HF_MIN | | 210.00 | 210.00 | 210.00 | MHz |
| | CLKOUT_FREQ_FX_HF_MAX | | 320.00 | 320.00 | 270.00 | MHz |
| **Input Clocks (High Frequency Mode)** | | | | | | |
| CLKIN (using DLL outputs)(1,3,4,6) | CLKIN_FREQ_DLL_HF_MIN | | 48.00 | 48.00 | 48.00 | MHz |
| | CLKIN_FREQ_DLL_HF_MAX | | 450.00 | 420.00 | 360.00 | MHz |
| CLKIN (using CLKFX outputs)(2,3,4) | CLKIN_FREQ_FX_HF_MIN | | 50.00 | 50.00 | 50.00 | MHz |
| | CLKIN_FREQ_FX_HF_MAX | | 320.00 | 320.00 | 270.00 | MHz |
| PSCLK | PSCLK_FREQ_HF_MIN | | 0.01 | 0.01 | 0.01 | MHz |
| | PSCLK_FREQ_HF_MAX | | 450.00 | 420.00 | 360.00 | MHz |

**Notes:**
1. "DLL outputs" is used here to describe the outputs: CLK0, CLK90, CLK180, CLK270, CLK2X, CLK2X180, and CLKDV.
2. If both DLL and CLKFX outputs are used, follow the more restrictive specification.
3. If the CLKIN_DIVIDE_BY_2 attribute of the DCM is used, then double these values.
4. If the CLKIN_DIVIDE_BY_2 attribute of the DCM is used and CLKIN frequency > 400 MHz, CLKIN duty cycle must be within ±5% (45/55 to 55/45).
5. CLK2X and CLK2X180 may not be used as the input to the CLKFB pin. See the ***Virtex-II Pro Platform FPGA User Guide*** for more information.
6. For the XC2VP100 -6 device only, clock macros for corner DCMS (X0Y0, X5Y0, X0Y1, X5Y1) are required to operate at maximum clock frequency. See **XAPP685** for implementation examples.

## Input Clock Tolerances

*Table 58:* **Input Clock Tolerances**

| Description | Symbol | Constraints $F_{CLKIN}$ | Speed Grade –7 Min | Speed Grade –7 Max | Speed Grade –6 Min | Speed Grade –6 Max | Speed Grade –5 Min | Speed Grade –5 Max | Units |
|---|---|---|---|---|---|---|---|---|---|
| **Input Clock Low/High Pulse Width** | | | | | | | | | |
| PSCLK | PSCLK_PULSE | < 1MHz | 25.00 | | 25.00 | | 25.00 | | ns |
| PSCLK and CLKIN(3) | PSCLK_PULSE and CLKIN_PULSE | 1 – 10 MHz | 25.00 | | 25.00 | | 25.00 | | ns |
| | | 10 – 25 MHz | 10.00 | | 10.00 | | 10.00 | | ns |
| | | 25 – 50 MHz | 5.00 | | 5.00 | | 5.00 | | ns |
| | | 50 – 100 MHz | 3.00 | | 3.00 | | 3.00 | | ns |
| | | 100 – 150 MHz | 2.40 | | 2.40 | | 2.40 | | ns |
| | | 150 – 200 MHz | 2.00 | | 2.00 | | 2.00 | | ns |
| | | 200 – 250 MHz | 1.80 | | 1.80 | | 1.80 | | ns |
| | | 250 – 300 MHz | 1.50 | | 1.50 | | 1.50 | | ns |
| | | 300 – 350 MHz | 1.30 | | 1.30 | | 1.30 | | ns |
| | | 350 – 400 MHz | 1.15 | | 1.15 | | 1.15 | | ns |
| | | > 400 MHz | 1.05 | | 1.05 | | 1.05 | | ns |
| **Input Clock Cycle-Cycle Jitter (Low Frequency Mode)** | | | | | | | | | |
| CLKIN (using DLL outputs)(1) | CLKIN_CYC_JITT_DLL_LF | | | ±300 | | ±300 | | ±300 | ps |
| CLKIN (using CLKFX outputs)(2) | CLKIN_CYC_JITT_FX_LF | | | ±300 | | ±300 | | ±300 | ps |
| **Input Clock Cycle-Cycle Jitter (High Frequency Mode)** | | | | | | | | | |
| CLKIN (using DLL outputs)(1) | CLKIN_CYC_JITT_DLL_HF | | | ±150 | | ±150 | | ±150 | ps |
| CLKIN (using CLKFX outputs)(2) | CLKIN_CYC_JITT_FX_HF | | | ±150 | | ±150 | | ±150 | ps |
| **Input Clock Period Jitter (Low Frequency Mode)** | | | | | | | | | |
| CLKIN (using DLL outputs)(1) | CLKIN_PER_JITT_DLL_LF | | | ±1 | | ±1 | | ±1 | ns |
| CLKIN (using CLKFX outputs)(2) | CLKIN_PER_JITT_FX_LF | | | ±1 | | ±1 | | ±1 | ns |
| **Input Clock Period Jitter (High Frequency Mode)** | | | | | | | | | |
| CLKIN (using DLL outputs)(1) | CLKIN_PER_JITT_DLL_HF | | | ±1 | | ±1 | | ±1 | ns |
| CLKIN (using CLKFX outputs)(2) | CLKIN_PER_JITT_FX_HF | | | ±1 | | ±1 | | ±1 | ns |
| **Feedback Clock Path Delay Variation** | | | | | | | | | |
| CLKFB off-chip feedback | CLKFB_DELAY_VAR_EXT | | | ±1 | | ±1 | | ±1 | ns |

**Notes:**
1. "DLL outputs" is used here to describe the outputs: CLK0, CLK90, CLK180, CLK270, CLK2X, CLK2X180, and CLKDV.
2. If both DLL and CLKFX outputs are used, follow the more restrictive specification.
3. If DCM phase shift feature is used and CLKIN frequency > 200 Mhz, CLKIN duty cycle must be within ±5% (45/55 to 55/45).

## Output Clock Jitter

*Table 59:* **Output Clock Jitter**

| Description | Symbol | Constraints | Speed Grade | | | Units |
|---|---|---|---|---|---|---|
| | | | –7 | –6 | –5 | |
| **Clock Synthesis Period Jitter** | | | | | | |
| CLK0 | CLKOUT_PER_JITT_0 | | ±100 | ±100 | ±100 | ps |
| CLK90 | CLKOUT_PER_JITT_90 | | ±150 | ±150 | ±150 | ps |
| CLK180 | CLKOUT_PER_JITT_180 | | ±150 | ±150 | ±150 | ps |
| CLK270 | CLKOUT_PER_JITT_270 | | ±150 | ±150 | ±150 | ps |
| CLK2X, CLK2X180 | CLKOUT_PER_JITT_2X | | ±200 | ±200 | ±200 | ps |
| CLKDV (integer division) | CLKOUT_PER_JITT_DV1 | | ±150 | ±150 | ±150 | ps |
| CLKDV (non-integer division) | CLKOUT_PER_JITT_DV2 | | ±300 | ±300 | ±300 | ps |
| CLKFX, CLKFX180 | CLKOUT_PER_JITT_FX | | Note (1) | Note (1) | Note (1) | ps |

**Notes:**
1. Use the **Jitter Calculator** on the Xilinx website (http://www.xilinx.com/applications/web_ds_v2/jitter_calc.htm) for CLKFX and CLKFX180 output jitter.

## Output Clock Phase Alignment

*Table 60:* **Output Clock Phase Alignment**

| Description | Symbol | Constraints | Speed Grade | | | Units |
|---|---|---|---|---|---|---|
| | | | –7 | –6 | –5 | |
| **Phase Offset Between CLKIN and CLKFB** | | | | | | |
| CLKIN/CLKFB | CLKIN_CLKFB_PHASE | | ±50 | ±50 | ±50 | ps |
| **Phase Offset Between Any DCM Outputs** | | | | | | |
| All CLK* outputs | CLKOUT_PHASE | | ±140 | ±140 | ±140 | ps |
| **Duty Cycle Precision** | | | | | | |
| DLL outputs(1) | CLKOUT_DUTY_CYCLE_DLL(2) | | ±150 | ±150 | ±150 | ps |
| CLKFX outputs | CLKOUT_DUTY_CYCLE_FX | | ±100 | ±100 | ±100 | ps |

**Notes:**
1. "DLL outputs" is used here to describe the outputs: CLK0, CLK90, CLK180, CLK270, CLK2X, CLK2X180, and CLKDV.
2. CLKOUT_DUTY_CYCLE_DLL applies to the 1X clock outputs (CLK0, CLK90, CLK180, and CLK270) only if DUTY_CYCLE_CORRECTION = TRUE.
3. Specification also applies to PSCLK.

## Miscellaneous Timing Parameters

*Table 61:* **Miscellaneous Timing Parameters**

| | | | Speed Grade | | | |
|---|---|---|---|---|---|---|
| **Description** | **Symbol** | **Constraints $F_{CLKIN}$** | **-7** | **-6** | **-5** | **Units** |
| **Time Required to Achieve LOCK** | | | | | | |
| Using DLL outputs(1) | LOCK_DLL: | | | | | |
| | LOCK_DLL_60 | > 60MHz | 20.00 | 20.00 | 20.00 | us |
| | LOCK_DLL_50_60 | 50 - 60 MHz | 25.00 | 25.00 | 25.00 | us |
| | LOCK_DLL_40_50 | 40 - 50 MHz | 50.00 | 50.00 | 50.00 | us |
| | LOCK_DLL_30_40 | 30 - 40 MHz | 90.00 | 90.00 | 90.00 | us |
| | LOCK_DLL_24_30 | 24 - 30 MHz | 120.00 | 120.00 | 120.00 | us |
| Using CLKFX outputs | LOCK_FX_MIN | | 10.00 | 10.00 | 10.00 | ms |
| | LOCK_FX_MAX | | 10.00 | 10.00 | 10.00 | ms |
| Additional lock time with fine phase shifting | LOCK_DLL_FINE_SHIFT | | 50.00 | 50.00 | 50.00 | us |
| **Fine Phase Shifting** | | | | | | |
| Absolute shifting range | FINE_SHIFT_RANGE | | 10.00 | 10.00 | 10.00 | ns |
| **Delay Lines** | | | | | | |
| Tap delay resolution | DCM_TAP_MIN | | 30.00 | 30.00 | 30.00 | ps |
| | DCM_TAP_MAX | | 50.00 | 50.00 | 50.00 | ps |

**Notes:**
1. "DLL outputs" is used here to describe the outputs: CLK0, CLK90, CLK180, CLK270, CLK2X, CLK2X180, and CLKDV.

## Frequency Synthesis

*Table 62:* **Frequency Synthesis**

| Attribute | Min | Max |
|---|---|---|
| CLKFX_MULTIPLY | 2 | 32 |
| CLKFX_DIVIDE | 1 | 32 |

## Parameter Cross-Reference

*Table 63:* **Parameter Cross-Reference**

| Libraries Guide | Data Sheet |
|---|---|
| DLL_CLKOUT_{MIN\|MAX}_LF | CLKOUT_FREQ_{1X\|2X\|DV}_LF |
| DFS_CLKOUT_{MIN\|MAX}_LF | CLKOUT_FREQ_FX_LF |
| DLL_CLKIN_{MIN\|MAX}_LF | CLKIN_FREQ_DLL_LF |
| DFS_CLKIN_{MIN\|MAX}_LF | CLKIN_FREQ_FX_LF |
| DLL_CLKOUT_{MIN\|MAX}_HF | CLKOUT_FREQ_{1X\|DV}_HF |
| DFS_CLKOUT_{MIN\|MAX}_HF | CLKOUT_FREQ_FX_HF |
| DLL_CLKIN_{MIN\|MAX}_HF | CLKIN_FREQ_DLL_HF |
| DFS_CLKIN_{MIN\|MAX}_HF | CLKIN_FREQ_FX_HF |

## Source-Synchronous Switching Characteristics

The parameters in this section provide the necessary values for calculating timing budgets for Virtex-II Pro source-synchronous transmitter and receiver data-valid windows.

*Table 64:* **Duty Cycle Distortion and Clock-Tree Skew**

| Description | Symbol | Device | Speed Grade | | | Units |
|---|---|---|---|---|---|---|
| | | | –7 | –6 | –5 | |
| Duty Cycle Distortion(1) | $T_{DCD_LOCAL}$ | All | 0.10 | 0.10 | 0.20 | ns |
| | $T_{DCD_CLK180}$ | | 0.10 | 0.11 | 0.13 | ns |
| Clock Tree Skew(2) | $T_{CKSKEW}$ | XC2VP2 | 0.13 | 0.13 | 0.13 | ns |
| | | XC2VP4 | 0.13 | 0.13 | 0.13 | ns |
| | | XC2VP7 | 0.13 | 0.13 | 0.13 | ns |
| | | XC2VP20 | 0.20 | 0.21 | 0.22 | ns |
| | | XC2VPX20 | 0.20 | 0.21 | 0.22 | ns |
| | | XC2VP30 | 0.20 | 0.22 | 0.24 | ns |
| | | XC2VP40 | 0.33 | 0.34 | 0.35 | ns |
| | | XC2VP50 | 0.40 | 0.41 | 0.42 | ns |
| | | XC2VP70 | 0.54 | 0.59 | 0.64 | ns |
| | | XC2VPX70 | 0.54 | 0.59 | 0.64 | ns |
| | | XC2VP100 | N/A | 0.79 | 0.87 | ns |

**Notes:**

1. These parameters represent the worst-case duty cycle distortion observable at the pins of the device using LVDS output buffers. For cases where other I/O standards are used, IBIS can be used to calculate any additional duty cycle distortion that might be caused by asymmetrical rise/fall times.

   $T_{DCD_LOCAL}$ applies to cases where the dedicated path from the DCM to the BUFG is bypassed and where local (IOB) inversion is used to provide the negative-edge clock to the DDR element in the I/O. Users must follow the implementation guidelines contained in **XAPP685** for these specifications to apply.

   $T_{DCD_CLK180}$ applies to cases where the CLK180 output of the DCM is used to provide the negative-edge clock to the DDR element in the I/O.
2. This value represents the worst-case clock-tree skew observable between sequential I/O elements. Significantly less clock-tree skew exists for I/O registers that are close to each other and fed by the same or adjacent clock-tree branches. Use the Xilinx FPGA_Editor and Timing Analyzer tools to evaluate clock skew specific to your application.

*Table 65:* **Package Skew**

| Description | Symbol | Device/Package | Value | Units |
|---|---|---|---|---|
| Package Skew(1) | $T_{PKGSKEW}$ | XC2VP2FF672 | 104 | ps |
| | | XC2VP4FF672 | 102 | ps |
| | | XC2VP7FF672 | 92 | ps |
| | | XC2VP7FF896 | 101 | ps |
| | | XC2VP20FF896 | 93 | ps |
| | | XC2VPX20FF896 | 93 | ps |
| | | XC2VP20FF1152 | 106 | ps |
| | | XC2VP30FF896 | 86 | ps |
| | | XC2VP30FF1152 | 112 | ps |
| | | XC2VP40FF1152 | 92 | ps |
| | | XC2VP40FF1148 | 100 | ps |
| | | XC2VP50FF1152 | 88 | ps |
| | | XC2VP50FF1148 | 101 | ps |
| | | XC2VP50FF1517 | 97 | ps |
| | | XC2VP70FF1517 | 95 | ps |
| | | XC2VP70FF1704 | 101 | ps |
| | | XC2VPX70FF1704 | 101 | ps |
| | | XC2VP100FF1704 | 86 | ps |
| | | XC2VP100FF1696 | 100 | ps |

**Notes:**
1. These values represent the worst-case skew between any two balls of the package: shortest flight time to longest flight time from Pad to Ball (7.1ps per mm).
2. Package trace length information is available for these device/package combinations. This information can be used to deskew the package.

*Table 66:* **Sample Window**

| Description | Symbol | Device | Speed Grade | | | Units |
|---|---|---|---|---|---|---|
| | | | –7 | –6 | –5 | |
| Sampling Error at Receiver Pins(1) | $T_{SAMP}$ | All | 0.50 | 0.50 | 0.50 | ns |

**Notes:**
1. This parameter indicates the total sampling error of Virtex-II Pro DDR input registers across voltage, temperature, and process. The characterization methodology uses the DCM to capture the DDR input registers' edges of operation.
2. These measurements include:
   - CLK0 and CLK180 DCM jitter
   - Worst-case duty-cycle distortion, $T_{DCD_CLK180}$
   - DCM accuracy (phase offset)
   - DCM phase shift resolution

   These measurements do not include package or clock tree skew.

*Table 67:* **Example Pin-to-Pin Setup/Hold: Source-Synchronous Configuration**

| Description | Symbol | Device | Speed Grade | | | Units |
|---|---|---|---|---|---|---|
| | | | –7 | –6 | –5 | |
| Example Data Input Set-Up and Hold Times Relative to a Forwarded Clock Input Pin,(1) Using DCM and Global Clock Buffer.<br>Values represent an 18-bit bus located in Banks 2, 3, 6, or 7 and grouped to one Horizontal Global Clock Line. TRACE must be used to determine the actual values for any given design.<br>For situations where clock and data inputs conform to different standards, adjust the setup and hold values accordingly using the values shown in IOB Input Switching Characteristics Standard Adjustments, page 25. | | | | | | |
| No Delay<br>Global Clock and IFF(2) with DCM | $T_{PSDCM_0}/T_{PHDCM_0}$ | XC2VP2 | 0.23/0.39 | 0.21/0.42 | 0.21/0.42 | ns |
| | | XC2VP4 | 0.26/0.37 | 0.24/0.40 | 0.24/0.41 | ns |
| | | XC2VP7 | 0.18/ 0.36 | 0.18/ 0.40 | 0.18/ 0.41 | ns |
| | | XC2VP20 | 0.14/ 0.41 | 0.13/ 0.42 | 0.12/ 0.44 | ns |
| | | XC2VPX20 | 0.14/ 0.41 | 0.13/ 0.42 | 0.12/ 0.44 | ns |
| | | XC2VP30 | 0.29/ 0.25 | 0.31/ 0.24 | 0.31/ 0.24 | ns |
| | | XC2VP40 | 0.25/ 0.30 | 0.26/ 0.29 | 0.27/ 0.29 | ns |
| | | XC2VP50 | 0.18/ 0.36 | 0.18/ 0.38 | 0.17/ 0.39 | ns |
| | | XC2VP70 | 0.18/ 0.37 | 0.18/ 0.38 | 0.18/ 0.38 | ns |
| | | XC2VPX70 | 0.18/ 0.37 | 0.18/ 0.38 | 0.18/ 0.38 | ns |
| | | XC2VP100 | N/A | 0.18/ 0.33 | 0.19/ 0.37 | ns |

**Notes:**
1. The timing values were measured using the fine-phase adjustment feature of the DCM. These measurements include:
   - CLK0 and CLK180 DCM jitter
   - Worst-case duty-cycle distortion using CLK0 and CLK180, $T_{DCD_CLK180}$

   Package skew is not included in these measurements.
2. IFF = Input Flip-Flop

## Source Synchronous Timing Budgets

This section describes how to use the parameters provided in the Source-Synchronous Switching Characteristics section to develop system-specific timing budgets. The following analysis provides information necessary for determining Virtex-II Pro contributions to an overall system timing analysis; no assumptions are made about the effects of Inter-Symbol Interference or PCB skew.

### *Virtex-II Pro Transmitter Data-Valid Window ($T_X$)*

$T_X$ is the minimum aggregate valid data period for a source-synchronous data bus at the pins of the device and is calculated as follows:

$T_X$ = Data Period - [Jitter(1) + Duty Cycle Distortion(2) + TCKSKEW(3) + TPKGSKEW(4)]

**Notes:**
1. Jitter values and accumulation methodology to be provided in a future release of this document. The absolute period jitter values found in the DCM Timing Parameters section of the particular DCM output clock used to clock the IOB FF can be used for a best case analysis.
2. This value depends on the clocking methodology used. See Note1 for Table 64.
3. This value represents the worst-case clock-tree skew observable between sequential I/O elements. Significantly less clock-tree skew exists for I/O registers that are close to each other and fed by the same or adjacent clock-tree branches. Use the Xilinx FPGA_Editor and Timing Analyzer tools to evaluate clock skew specific to your application.
4. These values represent the worst-case skew between any two balls of the package: shortest flight time to longest flight time from Pad to Ball.

### *Virtex-II Pro Receiver Data-Valid Window ($R_X$)*

$R_X$ is the required minimum aggregate valid data period for a source-synchronous data bus at the pins of the device and is calculated as follows:

$$R_X = [TSAMP^{(1)} + TCKSKEW^{(2)} + TPKGSKEW^{(3)}]$$

**Notes:**

1. This parameter indicates the total sampling error of Virtex-II Pro DDR input registers across voltage, temperature, and process. The characterization methodology uses the DCM to capture the DDR input registers' edges of operation. These measurements include:
   - CLK0 and CLK180 DCM jitter in a quiet system
   - Worst-case duty-cycle distortion
   - DCM accuracy (phase offset)
   - DCM phase shift resolution.

   These measurements do not include package or clock tree skew.
2. This value represents the worst-case clock-tree skew observable between sequential I/O elements. Significantly less clock-tree skew exists for I/O registers that are close to each other and fed by the same or adjacent clock-tree branches. Use the Xilinx FPGA_Editor and Timing Analyzer tools to evaluate clock skew specific to your application.
3. These values represent the worst-case skew between any two balls of the package: shortest flight time to longest flight time from Pad to Ball.

## Revision History

This section records the change history for this module of the data sheet.

| Date | Version | Revision |
|---|---|---|
| 01/31/02 | 1.0 | Initial Xilinx release. |
| 06/17/02 | 2.0 | • Added new Virtex-II Pro family members.<br>• Added timing parameters from speedsfile **v1.62**.<br>• Added Table 46, Pipelined Multiplier Switching Characteristics.<br>• Added 3.3V-vs-2.5V table entries for some parameters. |
| 09/03/02 | 2.1 | • Added Source-Synchronous Switching Characteristics section.<br>• Added absolute max ratings for 3.3V-vs-2.5V parameters in Table 1.<br>• Added recommended operating conditions for $V_{IN}$ and RocketIO footnote to Table 2.<br>• Updated SSTL2 values in Table 6. Added SSTL18 values: Table 6, Table 39, Table 32. [Table 32 removed in v2.8.]<br>• Added Table 10, which contains LVPECL DC specifications. |
| 09/27/02 | 2.2 | Added section General Power Supply Requirements. |
| 11/20/02 | 2.3 | Updated parametric information in:<br>• Table 1: Increase Absolute Max Rating for $V_{CCO}$, $V_{REF}$, $V_{IN}$, and $V_{TS}$ from 3.6V to 3.75V. Delete cautionary footnotes related to voltage overshoot/undershoot.<br>• Table 2: Delete $V_{CCO}$ specifications for 2.5V and below operation. Delete footnote referencing special information for 3.3V operation. Add footnote for PCI/PCI-X.<br>• Table 3: Add $I_{BATT}$. Delete $I_L$ specifications for 2.5V and below operation.<br>• Table 4: Add Typical Quiescent Supply Currents for XC2VP4 and XC2VP7 only<br>• Table 6: Correct $I_{OL}$ and $I_{OH}$ for SSTL2 I. Add rows for LVTTL, LVCMOS33, and PCI-X. Correct max $V_{IH}$ from $V_{CCO}$ to 3.6V.<br>• Table 7: Correct Min/Max $V_{OD}$, $V_{OCM}$, and $V_{ICM}$<br>• Table 10: Reformat LVPECL DC Specifications to match Virtex-II data sheet format<br>• Table 12: Correct parameter name from Differential Output Voltage to Single-Ended Output Voltage Swing.<br>• Table 16: Add CPMC405CLOCK max frequencies<br>• Table 27: Add footnote regarding serial data rate limitation in -5 part.<br>• Table 39: Add rows for LVTTL, LVCMOS33, and PCI-X.<br>• Table 32: Add LVTTL, LVCMOS33, and PCI-X. Correct all capacitive load values (except PCI/PCI-X) to 0 pF. [Table 32 removed in v2.8.]<br>• Table 51: Correct CCLK max frequencies |
| 11/25/02 | 2.4 | Table 1: Correct lower limit of voltage range of $V_{IN}$ and $V_{TS}$ from –0.3V to –0.5V for 3.3V. |

| Date | Version | Revision |
|---|---|---|
| 12/03/02 | 2.5 | Updated parametric information in:<br>• Table 1: Correct lower limit of voltage range of $V_{IN}$ and $V_{TS}$ from –0.5V to –0.3V for 3.3V.<br>• Table 2: Add footnote (2) regarding $V_{CCAUX}$ voltage droop. Renumbered other notes.<br>• Table 12: Add waveform diagrams (Figure 1 and Figure 2) illustrating $DV_{OUT}$ (single-ended) and $DV_{PPOUT}$ (differential).<br>• Table 23: Indicate REFCLK upper frequency limitation; relate REFCLK parameters to REFCLK2, BREFCLK, and BREFCLK2; correct $T_{RCLK}$ and $T_{FCLK}$ values and unit of measurement.<br>• Table 60: Add qualifying footnote to CLKOUT_DUTY_CYCLE_DLL. |
| 01/20/03 | 2.6 | Updated parametric information in:<br>• Table 12: Correct $DV_{IN}$ Min (200 mV to 175 mV) and $DV_{IN}$ Max (1000 mV to 2000 mV).<br>• Table 23: Correct $T_{RCLK}$ /$T_{FCLK}$ Typ (400 ps to 600 ps) and Max (600 ps to 1000 ps). Add footnote (2) to qualify Max $T_{GJTT}$ parameter.<br>• Table 59: Correct hyperlink in footnote (1) to point directly to Answer Record 13645.<br>• Move clock parameters from Table 18, Table 19, Table 20, and Table 21 to Table 16. |
| 03/24/03 | 2.7 | • Added/updated timing parameters from speedsfile **v1.76**.<br>• Table 2: Delete first table footnote and renumber all others.<br>• Table 3: Add "sample-tested" to $I_L$. Remove "Device" column, unnecessary.<br>• Table 8: Update $V_{OCM}$ (Typ) to 1.250V.<br>• Table 10: Update LVPECL_25 DC parameters.<br>• Table 23: Update $F_{GCLK}$ frequency ranges. Break out $T_{GJTT}$ by operating speed.<br>• Table 27: Update $F_{GTX}$ frequency ranges. Correct $T_{DJ}$ to 0.17 UI, $T_{RJ}$ to o.18 UI.<br>• Table 39: Update $V_{REF}$ (Typ) for HSTL Class I/II from 1.08V to 0.90V.<br>• Table 43, Table 44: Correct parameter name "CE input (WS)" to "SR input".<br>• Table 64: Break out $T_{DCD_CLK0}$ by device type. |
| 05/27/03 | 2.8 | • Updated time and frequency parameters as per speedsfile **v1.78**.<br>• Table 3: Added values for $I_{REF}$, $I_L$, $I_{RPU}$, $I_{RPD}$<br>• Corrected $I_{CCINTQ}$ (Table 4) and $I_{CCINTMIN}$ (Table 5) for XC2VP20 to 600 mA.<br>• Table 4: Updated/Added Typ and Max quiescent current values for XC2VP7 and XC2VP20. Added footnote specifying parameters are for Commercial Grade parts.<br>• Table 5: Added footnote specifying parameters are for Commercial Grade parts.<br>• Table 6: Corrected $V_{IH}$ (Max) for LVTTL and LVCMOS33 standards from 3.6V to 3.45V. Changed $V_{IL}$ (Min) for all standards to –0.2V. Corrected $V_{IL}$ (Max) for LVCMOS15 and LVCMOS18 from 20% $V_{CCO}$ to 30% $V_{CCO}$.<br>• Table 10: Corrected LVPECL_25 Min and Max values for $V_{IH}$ and $V_{IL}$. Added explanatory text above table.<br>• Table 13 and Table 14 (pin-pin and reg-reg performance): Changed device specified from XC2VP7FF672-6 to XC2VP20FF1152-6.<br>• Table 15: Updated to show devices XC2VP7 and XC2VP20 as Preliminary for the -6 speed grade and Production for the -5 speed grade.<br>• Removed former Table 32, Standard Capacitive Loads.<br>• Table 52: Updated $T_{TAPTCK}$ from 4.0 ns to 5.5 ns.<br>• Table 59: Modified footnote referenced at CLKFX/CLKFX180 to point to the online Jitter Calculator.<br>• Added Figure 6 and accompanying procedure for measuring standard adjustments. |
| 05/27/03 (cont'd) | 2.8 (cont'd) | • Table 1: Footnote (2) rewritten to specify "one or more banks."<br>• Table 57: Some DCM parameters were erroneously missing from v2.8 (single-module version) due to a document compilation error. The concatenated full data sheet version was not affected. These parameters have been restored. |

| Date | Version | Revision |
|---|---|---|
| 08/25/03 | 2.9 | • Updated time and frequency parameters as per speedsfile **v1.81**.<br>• Table 1: Footnote (2) rewritten to specify "one or more banks."<br>• Table 2: Added footnote referring to XAPP659 for 3.3V I/O operation.<br>• Table 53 and Table 54: Revised test setup footnote to refer to Figure 6. Previously specified a capacitive load parameter.<br>• Table 57: Due to a document compilation error in v2.8, some DCM parameters were erroneously omitted from the full data sheet file (all four modules concatenated), though not from the stand-alone Module 3 file. The omitted parameters have been restored.<br>• Table 64 and Table 66: Corrected parameters to expression in picoseconds, as labeled. Previously expressed in nanoseconds, but labeled picoseconds.<br>• Figure 6: Added note to figure regarding termination resistors.<br>• Table 5: Added $I_{CCINTMIN}$ for XC2VP30 device. |
| 09/10/03 | 2.10 | • Figure 7: Changed representation of mode pins M0, M1, and M2 indicating that they must be held to a constant DC level during and after configuration.<br>• Table 49: Added footnote indicating that mode pins M0, M1, and M2 must be held to a constant DC level during and after configuration. |
| 10/14/03 | 2.11 | • Table 1: Deleted Footnote (2), which had derated the absolute maximum $T_J$ when one or more banks operated at 3.3V. Changed $T_J$ description from "Operating junction temperature" to "Maximum junction temperature". Added new Footnote (2) linking to website for package thermal data.<br>• Table 4 and Table 5: Filled in power-on and quiescent current parameters for all devices through XC2VP70. Added Industrial Grade multiplier specification to Footnote (1) in both tables.<br>• In section General Power Supply Requirements, replaced reference to Answer Record 11713 with reference to **XAPP689** regarding handling of simultaneously switching outputs (SSO).<br>• In section I/O Standard Adjustment Measurement Methodology:<br>- Table 39 renamed Input Delay Measurement Methodology. Added footnotes.<br>- Added new Table 40, Output Delay Measurement Methodology.<br>- Replaced Figure 6, Generalized Test Setup, with new drawing.<br>- Revised and extended text describing output delay measurement procedure.<br>• Table 58: For Input Clock Low/High Pulse Width, PSCLK and CLKIN, changed existing Footnote (2) to new Footnote (3). |
| 11/10/03 | 2.12 | • Table 1: Changed 3.3V absolute max $V_{IN}$ and $V_{TS}$ from 3.75V to 4.05V. Added footnote referring to **XAPP659**.<br>• Table 4: Removed MIN column from table. |
| 12/05/03 | 3.0 | • XC2VP2 through XC2VP70 speed grades -5, -6, and -7, and XC2VP100 speed grades -5 and -6, updated and released to **Production status** as per speedsfile **v1.83**. Featured changes:<br>- Speedsfile parameter values for -7 speed grade added for devices XC2VP2-XC2VP70.<br>- Table 13 and Table 14: Pin-to-pin and register-to_register performance parameter values added.<br>- Table 64: New parameter $T_{DCD_LOCAL}$ (and footnote) replaces $T_{DCD_CLK0}$.<br>- All remaining source-synchronous parameter values added (Table 64 & following). |

| Date | Version | Revision |
|---|---|---|
| 12/05/03 (cont'd) | 3.0 (cont'd) | • Non-speedsfile parameter values added or updated:<br>• Table 3: $I_{BATT}$.<br>• Table 4: For XC2VP100, $I_{CCINTQ}$, $I_{CCOQ}$, and $I_{CCAUXQ}$.<br>• Table 5: For XC2VP100, $I_{CCINTMIN}$.<br>• Table 17: $T_{CPWL}$ and $T_{CPWH}$.<br>• Table 25: Added explanatory footnote to $T_{RXLAT}$ (MGT receiver latency) max value.<br>• Table 57: Added Footnote (3) regarding use of CLKIN_DIVIDE_BY_2 attribute. |
| 02/19/04 | 3.1 | • Updated time and frequency parameters as per speedsfile **v1.85**.<br>• Table 2, Recommended Operating Conditions: Revised Footnotes (4) and (6).<br>• Table 4, Quiescent Supply Current: Added Footnote (1) and updated Typical parameters.<br>• Table 10, LVPECL DC Specifications: Added parameter values for Maximum Differential Input Voltage (LVPECL).<br>• Table 14, Register-to-Register Performance: Removed reference to a number of designs for which test data is no longer provided.<br>• Table 16, Processor Clocks Absolute AC Characteristics: Added Footnote (1) referring to XAPP755.<br>• Added Table 41, Clock Distribution Switching Characteristics.<br>• Revised section Configuration Timing, page 39 through page 41, and JTAG Test Access Port Switching Characteristics, page 42, with improved timing diagrams, parameter tables, and organization.<br>• Table 50, Master/Slave Serial Mode Timing Characteristics, and Table 51, SelectMAP Mode Write Timing Characteristics: Added parameter $F_{CC_STARTUP}$.<br>• Table 51, SelectMAP Mode Write Timing Characteristics: Broke out $T_{SMDCC}$/$T_{SMCCD}$, DATA[0:7] setup/hold time, by device, and added new parameter specifications for XC2VP70 and XC2VP100 devices.<br>• Table 57, Operating Frequency Ranges: Added callouts for existing Footnote (3) to the four CLKIN parameters. Added new Footnote (4) to the four CLKIN parameters. Added new Footnote (5) to CLK2X, CLK2X180. Added new Footnote (6) to CLK2X, CLK2X180; CLK0, CLK180; and CLKIN (using DLL outputs). |
| 03/09/04 | 3.1.1 | • Recompiled for backward compatibility with Acrobat 4 and above. No content changes. |
| 04/22/04 | 3.2 | • Table 2, Recommended Operating Conditions: Corrected VTTX/VTRX lower voltage limit from 1.8V to 1.6V.<br>• Table 5, Power-On Current for Virtex-II Pro Devices: Added Footnote (2) stating that listed $I_{CCOMIN}$ values apply to the entire device (all banks).<br>• Table 40, Output Delay Measurement Methodology: Corrected $V_{MEAS}$ for LVTTL from 1.4V to 1.65V.<br>• Table 57, Operating Frequency Ranges: Corrected CLKOUT_FREQ_1X_LF_MAX and CLKIN_FREQ_DLL_LF_MAX for -7 devices from 210 MHz to 270 MHz.<br>• Table 65, Package Skew: Removed XC2VP40FF1517. |
| 06/30/04 | 4.0 | Merged in DS110-3 (Module 3 of Virtex-II Pro X data sheet). This merge added numerous previously unpublished RocketIO X MGT parameters. Specifications in this revision are from speedsfile **v1.86**. |

| Date | Version | Revision |
|---|---|---|
| 11/17/04 | 4.1 | • Figure 8, Figure 9: Corrected $T_{CCO}$ / DOUT to refer to the falling edge of CCLK.<br>• Table 23: Added Footnote (4) to $T_{PHASE}$ indicating an 8B/10B-type bitstream. Corrected $T_{LOCK}$ from Typ to Max specification. Additional description of "2X oversampling" added to half-rate operation condition for $F_{GCLK}$, and added Footnote (2) requiring use of oversampling techniques in XAPP572 for serial bit rates under 1 Gb/s.<br>• Table 25: Converted bit rate conditions for jitter parameters into four ranges. Added Footnote (2) requiring use of oversampling techniques in XAPP572 for serial bit rates under 1 Gb/s.<br>• Table 27: Additional description of "2X oversampling" added to half-speed clock description for $F_{GGTX}$. Converted bit rate conditions for jitter parameters into four ranges. Added Footnotes (3) and (4) requiring use of oversampling techniques in XAPP572 for serial bit rates under 1 Gb/s.<br>• Table 40: Changed capacitance $C_{REF}$ for all PCI/PCI-X standards from 0 pF to 10 pF.<br>• Table 49: Added Min/Max specifications for $T_{ICCK}$.<br>• Section Power-On Power Supply Requirements, page 5: Added word "monotonically" to description of $V_{CCINT}$ ramp-on requirements. Removed requirement that $V_{CCAUX}$ must be powered on before or with $V_{CCO}$. |
| 03/01/05 | 4.2 | • Updated values in Virtex-II Pro Performance Characteristics and Virtex-II Pro Switching Characteristics tables, based on values extracted from **speedsfile version 1.90**.<br>• Table 1 and Table 2: Corrected VCCAUXTX and VCCAUXRX to AVCCAUXTX and AVCCAUXRX respectively.<br>• Table 3: Further clarified $P_{RXTX}$ (MGT power dissipation) by explaining measurement method in Footnote (3).<br>• Table 5: Added power-on current specifications for XC2VPX70 device.<br>• Table 22: Changed $F_{GTOL}$ from ±100 ppm to ±350 ppm.<br>• Table 22 and Table 23: Changed $T_{GJTT}$ bit rate qualifiers from fixed bit rates to bit rate ranges.<br>• Table 36, Table 38, Table 39, and Table 40: Restructured these I/O-related tables to include descriptions, as well as the actual IOSTANDARD attributes (used in the Xilinx ICE™ software) for all I/O standards.<br>• Table 36: Rearranged I/O standards in a more logical order.<br>• Table 37: Added parameter $T_{RPW}$ (Minimum Pulse Width, SR Input).<br>• Table 38: Changed "Csl" to "$C_{REF}$" to agree with Figure 6 and Table 40. Rearranged I/O standards in a more logical order.<br>• Table 39: Added footnote defining equivalents for DCI standards.<br>• Table 40: Added Footnotes (2) and (3) to PCI/PCI-X capacitive load ($C_{REF}$) values.<br>• Table 47: Added parameter $T_{BCCS}$, CLKA to CLKB Setup Time.<br>• Table 50: Added Footnote (1) indicating that $F_{CC_SERIAL}$ should not exceed $F_{CC_STARTUP}$ if CCLK frequency is not adjustable.<br>• Table 52: $T_{TCKTDO}$ corrected from a "Min" to a "Max" specification. |
| 06/20/05 | 4.3 | • Table 12: Added specifications for Differential Input Impedance. |

| Date | Version | Revision |
|---|---|---|
| 09/15/05 | 4.4 | • Table 2: Added Footnote (7) to AVCCAUXRX for RocketIO X (1.8V for all non-8B/10B-encoded data).<br>• Table 3:<br>- Power dissipation for 10.3125 Gb/s deleted.<br>- Max $I_{CCAUXTX}$ and $I_{CCAUXRX}$ specifications added for Virtex-II Pro.<br>• Table 11: Added specification for minimum p-p differential input voltage.<br>• Table 22:<br>- $F_{GCLK}$: Changed high end of range to 425 MHz.<br>- $T_{GJTT}$: Changed measurement units to picoseconds and added maximum specifications for two bit rate ranges.<br>- $T_{LOCK}$: Changed measurement units to microseconds and adderd typical specification.<br>- $T_{PHASE}$: Changed measurement units to microseconds and adderd typical and maximum specifications.<br>• Table 24:<br>- All parameters: Deleted specifications for 10.3125 Gb/s.<br>- $T_{RJTOL}$: Added typical specifications.<br>- $T_{JTOL}$, $T_{SJTOL}$, and $T_{DDJTOL}$: Added typical and maximum specifications.<br>• Table 26: Restructured table. Total Jitter parameter added. All jitter parameters respecified.<br>• Table 28: Restructured table and added new specifications. |
| 10/10/05 | 4.5 | • Changed XC2VPX70 variable baud rate specification to fixed-rate operation at 4.25 Gb/s.<br>• Table 15: Removed -7 designations for XC2VPX20 and XC2VPX70 devices. |
| 03/05/07 | 4.6 | *No changes in Module 3 for this revision.* |
| 11/05/07 | 4.7 | Updated copyright notice and legal disclaimer. |
| 06/21/11 | 5.0 | Added *Product Not Recommended for New Designs* banner. Changed $I_{TRX}$ typical value in Table 3. |

## Notice of Disclaimer

THE XILINX HARDWARE FPGA AND CPLD DEVICES REFERRED TO HEREIN (“PRODUCTS”) ARE SUBJECT TO THE TERMS AND CONDITIONS OF THE XILINX LIMITED WARRANTY WHICH CAN BE VIEWED AT http://www.xilinx.com/warranty.htm. THIS LIMITED WARRANTY DOES NOT EXTEND TO ANY USE OF PRODUCTS IN AN APPLICATION OR ENVIRONMENT THAT IS NOT WITHIN THE SPECIFICATIONS STATED IN THE XILINX DATA SHEET. ALL SPECIFICATIONS ARE SUBJECT TO CHANGE WITHOUT NOTICE. PRODUCTS ARE NOT DESIGNED OR INTENDED TO BE FAIL-SAFE OR FOR USE IN ANY APPLICATION REQUIRING FAIL-SAFE PERFORMANCE, SUCH AS LIFE-SUPPORT OR SAFETY DEVICES OR SYSTEMS, OR ANY OTHER APPLICATION THAT INVOKES THE POTENTIAL RISKS OF DEATH, PERSONAL INJURY, OR PROPERTY OR ENVIRONMENTAL DAMAGE (“CRITICAL APPLICATIONS”). USE OF PRODUCTS IN CRITICAL APPLICATIONS IS AT THE SOLE RISK OF CUSTOMER, SUBJECT TO APPLICABLE LAWS AND REGULATIONS.

## Virtex-II Pro Data Sheet

The Virtex-II Pro Data Sheet contains the following modules:

- Virtex-II Pro and Virtex-II Pro X Platform FPGAs: Introduction and Overview (Module 1)
- Virtex-II Pro and Virtex-II Pro X Platform FPGAs: Functional Description (Module 2)
- Virtex-II Pro and Virtex-II Pro X Platform FPGAs: DC and Switching Characteristics (Module 3)
- Virtex-II Pro and Virtex-II Pro X Platform FPGAs: Pinout Information (Module 4)

# Virtex-II Pro and Virtex-II Pro X Platform FPGAs: Pinout Information

DS083 (v5.0) June 21, 2011 **Product Specification**

This document provides Virtex™-II Pro Device/Package Combinations, Maximum I/Os, and Virtex-II Pro Pin Definitions, followed by pinout tables, for these packages:

- FG256/FGG256 Fine-Pitch BGA Package
- FG456/FGG456 Fine-Pitch BGA Package
- FG676/FGG676 Fine-Pitch BGA Package
- FF672 Flip-Chip Fine-Pitch BGA Package
- FF896 Flip-Chip Fine-Pitch BGA Package
- FF1152 Flip-Chip Fine-Pitch BGA Package
- FF1148 Flip-Chip Fine-Pitch BGA Package
- FF1517 Flip-Chip Fine-Pitch BGA Package
- FF1704 Flip-Chip Fine-Pitch BGA Package
- FF1696 Flip-Chip Fine-Pitch BGA Package

For device pinout diagrams and layout guidelines, refer to the **Virtex-II Pro Platform FPGA User Guide**. ASCII package pinout files are also available for download from the Xilinx website (**www.xilinx.com**).

## Virtex-II Pro Device/Package Combinations and Maximum I/Os[1]

Wire-bond and flip-chip packages are available. Table 1 and Table 2 show the maximum number of user I/Os possible in wire-bond and flip-chip packages, respectively.

- FG denotes wire-bond fine-pitch BGA (1.00 mm pitch).
- FGG denotes Pb-free wire-bond fine-pitch BGA (1.00 mm pitch).
- FF denotes flip-chip fine-pitch BGA (1.00 mm pitch)

*Table 1:* **Wire-Bond Packages Information**

| Package[1] | FG256/ FGG256 | FG456/ FGG456 | FG676/ FGG676 |
|---|---|---|---|
| Pitch (mm) | 1.00 | 1.00 | 1.00 |
| Size (mm) | 17 x 17 | 23 x 23 | 26 x 26 |
| Maximum I/Os | 140 | 248 | 412 |

**Notes:**
1. Wire-bond packages include FGG*nnn* Pb-free versions. See Virtex-II Pro Ordering Examples (Module 1).

*Table 2:* **Flip-Chip Packages Information**

| Package | FF672 | FF896 | FF1152 | FF1148 | FF1517 | FF1704 | FF1696 |
|---|---|---|---|---|---|---|---|
| Pitch (mm) | 1.00 | 1.00 | 1.00 | 1.00 | 1.00 | 1.00 | 1.00 |
| Size (mm) | 27 x 27 | 31 x 31 | 35 x 35 | 35 x 35 | 40 x 40 | 42.5 x 42.5 | 42.5 x 42.5 |
| Maximum I/Os | 396 | 556 | 644 | 812 | 964 | 1040 | 1200 |

Table 3 shows the number of available I/Os, the number of RocketIO™ (or RocketIO X) multi-gigabit transceiver (MGT) pins, and the number of differential I/O pairs for each Virtex-II Pro device/package combination. The number of I/Os per package includes all user I/Os *except* the fifteen control pins (CCLK, DONE, M0, M1, M2, PROG_B, PWRDWN_B, TCK, TDI, TDO, TMS, HSWAP_EN, DXN, DXP, and RSVD), the nine (per transceiver) RocketIO MGT pins (TXP, TXN, RXP, RXN, AVCCAUXTX, AVCCAUXRX, VTTX, VTRX, and GNDA), and for Virtex-II Pro X devices only, the two BREFCLKN/ BREFCLKP differential clock input pairs (four pins). The Virtex-II Pro X devices are highlighted in bold type.

1. Unless otherwise noted, "Virtex-II Pro" refers to members of the Virtex-II Pro and/or Virtex-II Pro X families.

© 2000–2011 Xilinx, Inc. All rights reserved. XILINX, the Xilinx logo, the Brand Window, and other designated brands included herein are trademarks of Xilinx, Inc. PowerPC is a trademark of IBM Corp. and is used under license. All other trademarks are the property of their respective owners.

*Table 3:* **Virtex-II Pro Available I/Os and RocketIO MGT Pins per Device/Package Combination**

| Virtex-II Pro Device | User I/Os & RocketIO MGT Pins | Virtex-II Pro Package(1) | | | | | | | | | |
|---|---|---|---|---|---|---|---|---|---|---|---|
| | | FG256/ FGG256 | FG456/ FGG456 | FG676/ FGG456 | FF672 | FF896 | FF1152 | FF1148 | FF1517 | FF1704 | FF1696 |
| XC2VP2 | Available User I/Os | 140 | 156 | - | 204 | - | - | - | - | - | - |
| | RocketIO MGT Pins | 36 | 36 | - | 36 | - | - | - | - | - | - |
| | Differential I/O Pairs | 68 | 76 | - | 100 | - | - | - | - | - | - |
| XC2VP4 | Available User I/Os | 140 | 248 | - | 348 | - | - | - | - | - | - |
| | RocketIO MGT Pins | 36 | 36 | - | 36 | - | - | - | - | - | - |
| | Differential I/O Pairs | 68 | 122 | - | 172 | - | - | - | - | - | - |
| XC2VP7 | Available User I/Os | - | 248 | - | 396 | 396 | - | - | - | - | - |
| | RocketIO MGT Pins | - | 72 | - | 72 | 72 | - | - | - | - | - |
| | Differential I/O Pairs | - | 122 | - | 196 | 196 | - | - | - | - | - |
| XC2VP20 | Available User I/Os | - | - | 404 | - | 556 | 564 | - | - | - | - |
| | RocketIO MGT Pins | - | - | 72 | - | 72 | 72 | - | - | - | - |
| | Differential I/O Pairs | - | - | 196 | - | 272 | 276 | - | - | - | - |
| **XC2VPX20** | **Available User I/Os** | **-** | **-** | **-** | **-** | **552** | **-** | **-** | **-** | **-** | **-** |
| | **RocketIO X MGT Pins** | **-** | **-** | **-** | **-** | **72** | **-** | **-** | **-** | **-** | **-** |
| | **Differential I/O Pairs** | **-** | **-** | **-** | **-** | **270** | **-** | **-** | **-** | **-** | **-** |
| XC2VP30 | Available User I/Os | - | - | 416 | - | 556 | 644 | - | - | - | - |
| | RocketIO MGT Pins | - | - | 72 | - | 72 | 72 | - | - | - | - |
| | Differential I/O Pairs | - | - | 202 | - | 272 | 316 | - | - | - | - |
| XC2VP40 | Available User I/Os | - | - | 416 | - | - | 692 | 804 | - | - | - |
| | RocketIO MGT Pins | - | - | 72 | - | - | 108 | 0 | - | - | - |
| | Differential I/O Pairs | - | - | 202 | - | - | 340 | 396 | - | - | - |
| XC2VP50 | Available User I/Os | - | - | | - | - | 692 | 812 | 852 | - | - |
| | RocketIO MGT Pins | - | - | | - | - | 144 | 0 | 144 | - | - |
| | Differential I/O Pairs | - | - | | - | - | 340 | 400 | 420 | - | - |

*Table 3:* **Virtex-II Pro Available I/Os and RocketIO MGT Pins per Device/Package Combination *(Continued)***

| Virtex-II Pro Device | User I/Os & RocketIO MGT Pins | Virtex-II Pro Package[1] | | | | | | | | | |
|---|---|---|---|---|---|---|---|---|---|---|---|
| | | FG256/ FGG256 | FG456/ FGG456 | FG676/ FGG456 | FF672 | FF896 | FF1152 | FF1148 | FF1517 | FF1704 | FF1696 |
| XC2VP70 | Available User I/Os | - | - | | - | - | - | - | 964 | 996 | - |
| | RocketIO MGT Pins | - | - | | - | - | - | - | 144 | 180 | - |
| | Differential I/O Pairs | - | - | | - | - | - | - | 476 | 492 | - |
| **XC2VPX70** | **Available User I/Os** | **-** | **-** | | **-** | **-** | **-** | **-** | **-** | **992** | **-** |
| | **RocketIO X MGT Pins** | **-** | **-** | | **-** | **-** | **-** | **-** | **-** | **180** | **-** |
| | **Differential I/O Pairs** | **-** | **-** | | **-** | **-** | **-** | **-** | **-** | **490** | **-** |
| XC2VP100 | Available User I/Os | - | - | | - | - | - | - | - | 1040 | 1164 |
| | RocketIO MGT Pins | - | - | | - | - | - | - | - | 180 | 0 |
| | Differential I/O Pairs | - | - | | - | - | - | - | - | 512 | 572 |

**Notes:**
1. Wire-bond packages include FGG*nnn* Pb-free versions. See Virtex-II Pro Ordering Examples (Module 1)

## Virtex-II Pro Pin Definitions

This section describes the pinouts for Virtex-II Pro devices in the following packages:

- FG256/FGG256, FG456/FGG456, and FG676/FGG676: wire-bond fine-pitch BGA of 1.00 mm pitch
- FF672, FF896, FF1148, FF1152, FF1517, FF1696, and FF1704: flip-chip fine-pitch BGA of 1.00 mm pitch

All of the devices supported in a particular package are pin-out-compatible and are listed in the same table (one table per package). Pins that are not available for smaller devices are listed in right-hand columns.

Each device is split into eight I/O banks to allow for flexibility in the choice of I/O standards. Global pins, including JTAG, configuration, and power/ground pins, are listed at the end of each table. Table 4 provides definitions for all pin types.

All Virtex-II Pro pinout tables are available on the distribution CD-ROM, or on the web (at http://www.xilinx.com).

### Pin Definitions

Table 4 provides a description of each pin type listed in Virtex-II Pro pinout tables.

*Table 4:* **Virtex-II Pro Pin Definitions**

| Pin Name | Direction | Description |
|---|---|---|
| **User I/O Pins:** | | |
| IO_LXXY_# | Input/Output/ Bidirectional | All user I/O pins are capable of differential signalling and can implement LVDS, ULVDS, BLVDS, LVPECL, or LDT pairs. Each user I/O is labeled "**IO_LXXY_#**", where:<br>**IO** indicates a user I/O pin.<br>**LXXY** indicates a differential pair, with **XX** a unique pair in the bank and **Y = P/N** for the positive and negative sides of the differential pair.<br>**#** indicates the bank number (0 through 7) |
| **Dual-Function Pins:** | | |
| IO_LXXY_#/ZZZ | The *dual-function pins* are labelled "**IO_LXXY_#/ZZZ**", where "**ZZZ**" can be one of the following pins:<br>Per Bank - **VRP, VRN,** or **VREF**<br>Globally - **GCLKX(S/P), BUSY/DOUT, INIT_B, D0/DIN – D7, RDWR_B,** or **CS_B**<br>These dual functions are defined in the following section: | |
| **"ZZZ" (Dual Function) Definitions:** | | |
| D0/DIN, D1, D2, D3, D4, D5, D6, D7 | Input/Output | • *In SelectMAP mode,* D0 through D7 are configuration data pins. These pins become user I/Os after configuration, unless the SelectMAP port is retained.<br>• *In bit-serial modes,* DIN (D0) is the single-data input. This pin becomes a user I/O after configuration. |
| CS_B | Input | In SelectMAP mode, this is the active-low Chip Select signal. The pin becomes a user I/O after configuration, unless the SelectMAP port is retained. |
| RDWR_B | Input | In SelectMAP mode, this is the active-low Write Enable signal. The pin becomes a user I/O after configuration, unless the SelectMAP port is retained. |
| BUSY/DOUT | Output | • *In SelectMAP mode,* BUSY controls the rate at which configuration data is loaded. The pin becomes a user I/O after configuration, unless the SelectMAP port is retained.<br>• *In bit-serial modes,* DOUT provides preamble and configuration data to downstream devices in a daisy-chain. The pin becomes a user I/O after configuration. |
| INIT_B | Bidirectional (open-drain) | When Low, this pin indicates that the configuration memory is being cleared. When held Low, the start of configuration is delayed. During configuration, a Low on this output indicates that a configuration data error has occurred. The pin becomes a user I/O after configuration. |

*Table 4:* **Virtex-II Pro Pin Definitions** ***(Continued)***

| Pin Name | Direction | Description |
|---|---|---|
| GCLKx (S/P) | Input/Output | These are clock input pins that connect to Global Clock Buffers. These pins become regular user I/Os when not needed for clocks.<br>These pins can be used to clock the RocketIO transceiver. See the **RocketIO Transceiver User Guide** for design guidelines and BREFCLK-specific pins, by device. |
| VRP | Input | This pin is for the DCI voltage reference resistor of P transistor (per bank). |
| VRN | Input | This pin is for the DCI voltage reference resistor of N transistor (per bank). |
| $V_{REF}$ | Input | These are input threshold voltage pins. They become user I/Os when an external threshold voltage is not needed (per bank). |
| **Dedicated Pins:**(1) | | |
| CCLK | Input/Output | Configuration clock. Output in Master mode or Input in Slave mode. |
| PROG_B | Input | Active Low asynchronous reset to configuration logic. This pin has a permanent weak pull-up resistor. |
| DONE | Input/Output | DONE is a bidirectional signal with an optional internal pull-up resistor. As an output, this pin indicates completion of the configuration process. As an input, a Low level on DONE can be configured to delay the start-up sequence. |
| M2, M1, M0 | Input | Configuration mode selection. Pin is biased by $V_{CCAUX}$ (must be 2.5V). These pins should not connect to 3.3V unless 100Ω series resistors are used. The mode pins are not to be toggled (changed) while in operation during and after configuration. |
| HSWAP_EN | Input | Enable I/O pull-ups during configuration. |
| TCK | Input | Boundary Scan Clock. This pin is 3.3V compatible. |
| TDI | Input | Boundary Scan Data Input. This pin is 3.3V compatible. |
| TDO | Output (open-drain) | Boundary Scan Data Output. Pin is open-drain and can be pulled up to 3.3V. It is recommended that the external pull-up be greater than 200Ω. There is no internal pull-up. |
| TMS | Input | Boundary Scan Mode Select. This pin is 3.3V compatible. |
| PWRDWN_B | Input *(unsupported)* | Active Low power-down pin (unsupported). *Driving this pin Low can adversely affect device operation and configuration.* PWRDWN_B is internally pulled High, which is its default state. It does not require an external pull-up. |
| **Other Pins:** | | |
| DXN, DXP | N/A | Temperature-sensing diode pins (Anode: DXP, Cathode: DXN). |
| $V_{BATT}$ | Input | Decryptor key memory backup supply. (Connect to $V_{CCAUX}$ or GND if battery not used.) |
| RSVD | N/A | Reserved pin - do not connect. |
| $V_{CCO}$ | Input | Power-supply pins for the output drivers (per bank). |
| $V_{CCAUX}$ | Input | Power-supply pins for auxiliary circuits. |
| $V_{CCINT}$ | Input | Power-supply pins for the internal core logic. |
| GND | Input | Ground. |
| AVCCAUXRX# | Input | Analog power supply for receive circuitry of the RocketIO MGT (2.5V). |
| AVCCAUXTX# | Input | Analog power supply for transmit circuitry of the RocketIO MGT (2.5V). |
| BREFCLKN, BREFCLKP(2) | Input | Differential clock input that clocks the RocketIO X MGTs populating the same side of the chip (top or bottom). Can also drive DCMs for RocketIO X MGT use. |

*Table 4:* **Virtex-II Pro Pin Definitions *(Continued)***

| Pin Name | Direction | Description |
|---|---|---|
| VTRXPAD# | Input | Receive termination supply for the RocketIO multi-gigabit transceiver (1.8V - 2.8V). |
| VTTXPAD# | Input | Transmit termination supply for the RocketIO multi-gigabit transceiver (1.8V - 2.8V). |
| GNDA# | Input | Ground for the analog circuitry of the RocketIO multi-gigabit transceiver. |
| RXPPAD# | Input | Positive differential receive port of the RocketIO multi-gigabit transceiver. |
| RXNPAD# | Input | Negative differential receive port of the RocketIO multi-gigabit transceiver. |
| TXPPAD# | Output | Positive differential transmit port of the RocketIO multi-gigabit transceiver. |
| TXNPAD# | Output | Negative differential transmit port of the RocketIO multi-gigabit transceiver. |

**Notes:**
1. All dedicated pins (JTAG and configuration) are powered by $V_{CCAUX}$ (independent of the bank $V_{CCO}$ voltage).
2. Virtex-II Pro X devices XC2VPX20 and XC2VPX70 only. Each BREFCLK(N/P) differential clock input pair takes the place of one regular Virtex-II Pro dual-function IO/GCLKx(S/P) pair on each side of the chip (top or bottom). For RocketIO BREFCLK, see section BREFCLK Pin Definitions (RocketIO Only) immediately following.

## BREFCLK Pin Definitions (RocketIO Only)

These dedicated clocks use the same clock inputs for all packages:

| | | | | | | | |
|---|---|---|---|---|---|---|---|
| Top | BREFCLK | P | GCLK4S | Bottom | BREFCLK | P | GCLK6P |
| | | N | GCLK5P | | | N | GCLK7S |
| | BREFCLK2 | P | GCLK2S | | BREFCLK2 | P | GCLK0P |
| | | N | GCLK3P | | | N | GCLK1S |

For detailed information about using BREFCLK/BREFCLK2, including routing considerations and pin numbers for all package types, refer to Chapter 2, "Digital Design Considerations," in the **RocketIO Transceiver User Guide**.

## FG256/FGG256 Fine-Pitch BGA Package

As shown in Table 5, XC2VP2 and XC2VP4 Virtex-II Pro devices are available in the FG256/FGG256 fine-pitch BGA package. The pins in each of these devices are identical. Following this table are the FG256/FGG256 Fine-Pitch BGA Package Specifications (1.00mm pitch).

*Table 5:* **FG256/FGG256 — XC2VP2 and XC2VP4**

| Bank | Pin Description | Pin Number |
|---|---|---|
| 0 | IO_L01N_0/VRP_0 | C2 |
| 0 | IO_L01P_0/VRN_0 | C3 |
| 0 | IO_L02N_0 | B3 |
| 0 | IO_L02P_0 | C4 |
| 0 | IO_L03N_0 | A2 |
| 0 | IO_L03P_0/VREF_0 | A3 |
| 0 | IO_L06N_0 | D5 |
| 0 | IO_L06P_0 | C5 |
| 0 | IO_L07P_0 | D6 |
| 0 | IO_L09N_0 | E6 |
| 0 | IO_L09P_0/VREF_0 | E7 |
| 0 | IO_L69N_0 | D7 |
| 0 | IO_L69P_0/VREF_0 | C7 |
| 0 | IO_L74N_0/GCLK7P | D8 |
| 0 | IO_L74P_0/GCLK6S | C8 |
| 0 | IO_L75N_0/GCLK5P | B8 |
| 0 | IO_L75P_0/GCLK4S | A8 |
| | | |
| 1 | IO_L75N_1/GCLK3P | A9 |
| 1 | IO_L75P_1/GCLK2S | B9 |
| 1 | IO_L74N_1/GCLK1P | C9 |
| 1 | IO_L74P_1/GCLK0S | D9 |
| 1 | IO_L69N_1/VREF_1 | C10 |
| 1 | IO_L69P_1 | D10 |
| 1 | IO_L09N_1/VREF_1 | E10 |
| 1 | IO_L09P_1 | E11 |
| 1 | IO_L07N_1 | D11 |
| 1 | IO_L06N_1 | C12 |
| 1 | IO_L06P_1 | D12 |
| 1 | IO_L03N_1/VREF_1 | A14 |
| 1 | IO_L03P_1 | A15 |

*Table 5:* **FG256/FGG256 — XC2VP2 and XC2VP4**

| Bank | Pin Description | Pin Number |
|---|---|---|
| 1 | IO_L02N_1 | C13 |
| 1 | IO_L02P_1 | B14 |
| 1 | IO_L01N_1/VRP_1 | C14 |
| 1 | IO_L01P_1/VRN_1 | C15 |
| | | |
| 2 | IO_L01N_2/VRP_2 | E14 |
| 2 | IO_L01P_2/VRN_2 | E15 |
| 2 | IO_L02N_2 | E13 |
| 2 | IO_L02P_2 | F12 |
| 2 | IO_L03N_2 | F13 |
| 2 | IO_L03P_2 | F14 |
| 2 | IO_L04N_2/VREF_2 | F15 |
| 2 | IO_L04P_2 | F16 |
| 2 | IO_L06N_2 | G13 |
| 2 | IO_L06P_2 | G14 |
| 2 | IO_L85N_2 | G15 |
| 2 | IO_L85P_2 | G16 |
| 2 | IO_L86N_2 | G12 |
| 2 | IO_L86P_2 | H13 |
| 2 | IO_L88N_2/VREF_2 | H14 |
| 2 | IO_L88P_2 | H15 |
| 2 | IO_L90N_2 | H16 |
| 2 | IO_L90P_2 | J16 |
| | | |
| 3 | IO_L90N_3 | J15 |
| 3 | IO_L90P_3 | J14 |
| 3 | IO_L89N_3 | J13 |
| 3 | IO_L89P_3 | K12 |
| 3 | IO_L87N_3/VREF_3 | K16 |
| 3 | IO_L87P_3 | K15 |
| 3 | IO_L85N_3 | K14 |
| 3 | IO_L85P_3 | K13 |
| 3 | IO_L06N_3 | L16 |
| 3 | IO_L06P_3 | L15 |
| 3 | IO_L05N_3 | L14 |

*Table 5:* **FG256/FGG256 — XC2VP2 and XC2VP4**

| Bank | Pin Description | Pin Number |
|---|---|---|
| 3 | IO_L05P_3 | L13 |
| 3 | IO_L03N_3/VREF_3 | L12 |
| 3 | IO_L03P_3 | M13 |
| 3 | IO_L02N_3 | M16 |
| 3 | IO_L02P_3 | N16 |
| 3 | IO_L01N_3/VRP_3 | M15 |
| 3 | IO_L01P_3/VRN_3 | M14 |
| | | |
| 4 | IO_L01N_4/BUSY/DOUT(1) | P15 |
| 4 | IO_L01P_4/INIT_B | P14 |
| 4 | IO_L02N_4/D0/DIN(1) | R14 |
| 4 | IO_L02P_4/D1 | P13 |
| 4 | IO_L03N_4/D2 | T15 |
| 4 | IO_L03P_4/D3 | T14 |
| 4 | IO_L06N_4/VRP_4 | N12 |
| 4 | IO_L06P_4/VRN_4 | P12 |
| 4 | IO_L07P_4/VREF_4 | N11 |
| 4 | IO_L09N_4 | M11 |
| 4 | IO_L09P_4/VREF_4 | M10 |
| 4 | IO_L69N_4 | N10 |
| 4 | IO_L69P_4/VREF_4 | P10 |
| 4 | IO_L74N_4/GCLK3S | N9 |
| 4 | IO_L74P_4/GCLK2P | P9 |
| 4 | IO_L75N_4/GCLK1S | R9 |
| 4 | IO_L75P_4/GCLK0P | T9 |
| | | |
| 5 | IO_L75N_5/GCLK7S | T8 |
| 5 | IO_L75P_5/GCLK6P | R8 |
| 5 | IO_L74N_5/GCLK5S | P8 |
| 5 | IO_L74P_5/GCLK4P | N8 |
| 5 | IO_L69N_5/VREF_5 | P7 |
| 5 | IO_L69P_5 | N7 |
| 5 | IO_L09N_5/VREF_5 | M7 |
| 5 | IO_L09P_5 | M6 |
| 5 | IO_L07N_5/VREF_5 | N6 |

*Table 5:* **FG256/FGG256 — XC2VP2 and XC2VP4**

| Bank | Pin Description | Pin Number |
|---|---|---|
| 5 | IO_L06N_5/VRP_5 | P5 |
| 5 | IO_L06P_5/VRN_5 | N5 |
| 5 | IO_L03N_5/D4 | T3 |
| 5 | IO_L03P_5/D5 | T2 |
| 5 | IO_L02N_5/D6 | P4 |
| 5 | IO_L02P_5/D7 | R3 |
| 5 | IO_L01N_5/RDWR_B | P3 |
| 5 | IO_L01P_5/CS_B | P2 |
| | | |
| 6 | IO_L01P_6/VRN_6 | M3 |
| 6 | IO_L01N_6/VRP_6 | M2 |
| 6 | IO_L02P_6 | N1 |
| 6 | IO_L02N_6 | M1 |
| 6 | IO_L03P_6 | M4 |
| 6 | IO_L03N_6/VREF_6 | L5 |
| 6 | IO_L05P_6 | L4 |
| 6 | IO_L05N_6 | L3 |
| 6 | IO_L06P_6 | L2 |
| 6 | IO_L06N_6 | L1 |
| 6 | IO_L85P_6 | K4 |
| 6 | IO_L85N_6 | K3 |
| 6 | IO_L87P_6 | K2 |
| 6 | IO_L87N_6/VREF_6 | K1 |
| 6 | IO_L89P_6 | K5 |
| 6 | IO_L89N_6 | J4 |
| 6 | IO_L90P_6 | J3 |
| 6 | IO_L90N_6 | J2 |
| | | |
| 7 | IO_L90P_7 | J1 |
| 7 | IO_L90N_7 | H1 |
| 7 | IO_L88P_7 | H2 |
| 7 | IO_L88N_7/VREF_7 | H3 |
| 7 | IO_L86P_7 | H4 |
| 7 | IO_L86N_7 | G5 |
| 7 | IO_L85P_7 | G1 |

*Table 5:* **FG256/FGG256 — XC2VP2 and XC2VP4**

| Bank | Pin Description | Pin Number |
|---|---|---|
| 7 | IO_L85N_7 | G2 |
| 7 | IO_L06P_7 | G3 |
| 7 | IO_L06N_7 | G4 |
| 7 | IO_L04P_7 | F1 |
| 7 | IO_L04N_7/VREF_7 | F2 |
| 7 | IO_L03P_7 | F3 |
| 7 | IO_L03N_7 | F4 |
| 7 | IO_L02P_7 | F5 |
| 7 | IO_L02N_7 | E4 |
| 7 | IO_L01P_7/VRN_7 | E2 |
| 7 | IO_L01N_7/VRP_7 | E3 |
| | | |
| 0 | VCCO_0 | F8 |
| 0 | VCCO_0 | F7 |
| 0 | VCCO_0 | E8 |
| 1 | VCCO_1 | F9 |
| 1 | VCCO_1 | F10 |
| 1 | VCCO_1 | E9 |
| 2 | VCCO_2 | H12 |
| 2 | VCCO_2 | H11 |
| 2 | VCCO_2 | G11 |
| 3 | VCCO_3 | K11 |
| 3 | VCCO_3 | J12 |
| 3 | VCCO_3 | J11 |
| 4 | VCCO_4 | M9 |
| 4 | VCCO_4 | L9 |
| 4 | VCCO_4 | L10 |
| 5 | VCCO_5 | M8 |
| 5 | VCCO_5 | L8 |
| 5 | VCCO_5 | L7 |
| 6 | VCCO_6 | K6 |
| 6 | VCCO_6 | J6 |
| 6 | VCCO_6 | J5 |
| 7 | VCCO_7 | H6 |
| 7 | VCCO_7 | H5 |

*Table 5:* **FG256/FGG256 — XC2VP2 and XC2VP4**

| Bank | Pin Description | Pin Number |
|---|---|---|
| 7 | VCCO_7 | G6 |
| | | |
| N/A | CCLK | N15 |
| N/A | PROG_B | D1 |
| N/A | DONE | P16 |
| N/A | M0 | N3 |
| N/A | M1 | N2 |
| N/A | M2 | P1 |
| N/A | TCK | D16 |
| N/A | TDI | E1 |
| N/A | TDO | E16 |
| N/A | TMS | C16 |
| N/A | PWRDWN_B | N14 |
| N/A | HSWAP_EN | C1 |
| N/A | RSVD | D14 |
| N/A | VBATT | D15 |
| N/A | DXP | D2 |
| N/A | DXN | D3 |
| N/A | AVCCAUXTX6 | B5 |
| N/A | VTTXPAD6 | B4 |
| N/A | TXNPAD6 | A4 |
| N/A | TXPPAD6 | A5 |
| N/A | GNDA6 | C6 |
| N/A | RXPPAD6 | A6 |
| N/A | RXNPAD6 | A7 |
| N/A | VTRXPAD6 | B6 |
| N/A | AVCCAUXRX6 | B7 |
| N/A | AVCCAUXTX7 | B11 |
| N/A | VTTXPAD7 | B10 |
| N/A | TXNPAD7 | A10 |
| N/A | TXPPAD7 | A11 |
| N/A | GNDA7 | C11 |
| N/A | RXPPAD7 | A12 |
| N/A | RXNPAD7 | A13 |
| N/A | VTRXPAD7 | B12 |

*Table 5:* **FG256/FGG256 — XC2VP2 and XC2VP4**

| Bank | Pin Description | Pin Number |
|---|---|---|
| N/A | AVCCAUXRX7 | B13 |
| N/A | AVCCAUXRX18 | R13 |
| N/A | VTRXPAD18 | R12 |
| N/A | RXNPAD18 | T13 |
| N/A | RXPPAD18 | T12 |
| N/A | GNDA18 | P11 |
| N/A | TXPPAD18 | T11 |
| N/A | TXNPAD18 | T10 |
| N/A | VTTXPAD18 | R10 |
| N/A | AVCCAUXTX18 | R11 |
| N/A | AVCCAUXRX19 | R7 |
| N/A | VTRXPAD19 | R6 |
| N/A | RXNPAD19 | T7 |
| N/A | RXPPAD19 | T6 |
| N/A | GNDA19 | P6 |
| N/A | TXPPAD19 | T5 |
| N/A | TXNPAD19 | T4 |
| N/A | VTTXPAD19 | R4 |
| N/A | AVCCAUXTX19 | R5 |
| | | |
| N/A | VCCINT | N4 |
| N/A | VCCINT | N13 |
| N/A | VCCINT | M5 |
| N/A | VCCINT | M12 |
| N/A | VCCINT | E5 |
| N/A | VCCINT | E12 |
| N/A | VCCINT | D4 |
| N/A | VCCINT | D13 |
| N/A | VCCAUX | R16 |
| N/A | VCCAUX | R1 |
| N/A | VCCAUX | B16 |
| N/A | VCCAUX | B1 |
| N/A | GND | T16 |
| N/A | GND | T1 |
| N/A | GND | R2 |

*Table 5:* **FG256/FGG256 — XC2VP2 and XC2VP4**

| Bank | Pin Description | Pin Number |
|---|---|---|
| N/A | GND | R15 |
| N/A | GND | L6 |
| N/A | GND | L11 |
| N/A | GND | K9 |
| N/A | GND | K8 |
| N/A | GND | K7 |
| N/A | GND | K10 |
| N/A | GND | J9 |
| N/A | GND | J8 |
| N/A | GND | J7 |
| N/A | GND | J10 |
| N/A | GND | H9 |
| N/A | GND | H8 |
| N/A | GND | H7 |
| N/A | GND | H10 |
| N/A | GND | G9 |
| N/A | GND | G8 |
| N/A | GND | G7 |
| N/A | GND | G10 |
| N/A | GND | F6 |
| N/A | GND | F11 |
| N/A | GND | B2 |
| N/A | GND | B15 |
| N/A | GND | A16 |
| N/A | GND | A1 |

**Notes:**
1. See Table 4 for an explanation of the signals available on this pin.

## FG256/FGG256 Fine-Pitch BGA Package Specifications (1.00mm pitch)

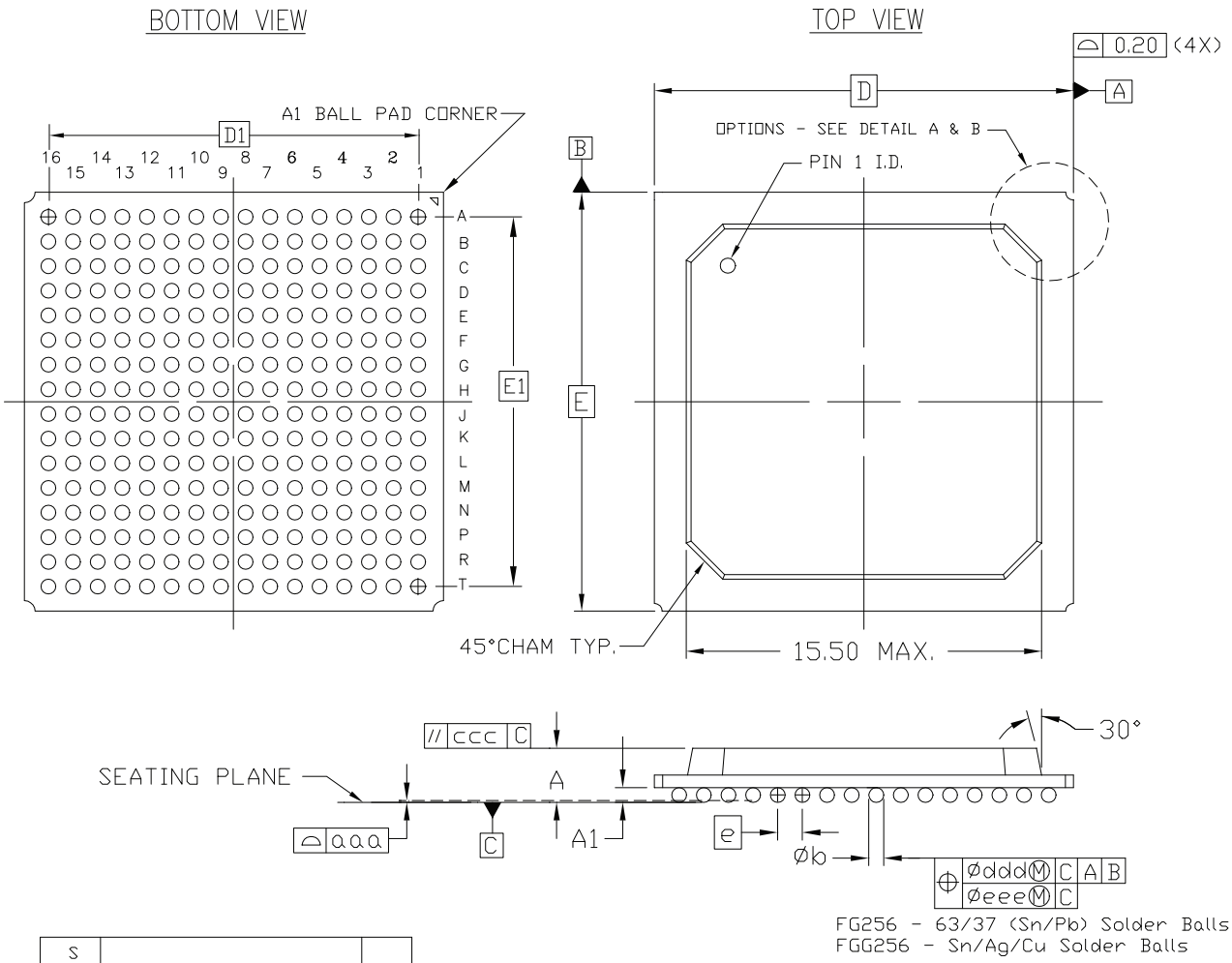


| SYMBOL | MILLIMETERS | | | NOTE |
|---|---|---|---|---|
| | MIN. | NOM. | MAX. | |
| A | — | — | 2.00 | 3 |
| $A_1$ | 0.35 | 0.50 | 0.60 | |
| D/E | 17.00 BSC | | | |
| $D_1/E_1$ | 15.00 REF | | | |
| e | 1.00 BSC | | | |
| Øb | 0.50 | 0.60 | 0.70 | |
| aaa | — | — | 0.20 | |
| ccc | — | — | 0.35 | |
| ddd | — | — | 0.30 | |
| eee | — | — | 0.10 | |
| M | 16 | | | 2 |

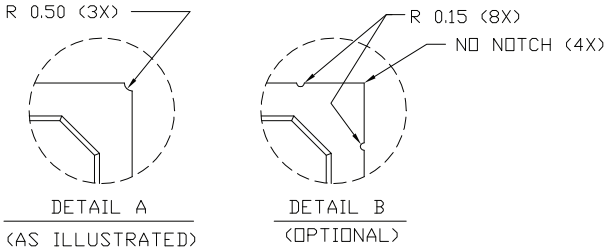


NOTES:

1. ALL DIMENSIONS AND TOLERANCES CONFORM TO ANSI Y14.5M-1994.
2. SYMBOL 'M' IS THE BALL MATRIX SIZE
3. NOMINAL DIMENSION IS TYPICALLY 1.60-1.73mm
4. CONFORMS TO JEDEC MS-034-AAF-1

*Figure 1:* **FG256/FGG256 Fine-Pitch BGA Package Specifications**

## FG456/FGG456 Fine-Pitch BGA Package

As shown in Table 6, XC2VP2, XC2VP4, and XC2VP7 Virtex-II Pro devices are available in the FG456/FGG456 fine-pitch BGA package. The pins in these devices are same, except for the differences shown in the "No Connects" column. Following this table are the FG456/FGG456 Fine-Pitch BGA Package Specifications (1.00mm pitch).

*Table 6:* **FG456/FGG456 — XC2VP2, XC2VP4, and XC2VP7**

| Bank | Pin Description | Pin Number | No Connects | | |
|---|---|---|---|---|---|
| | | | XC2VP2 | XC2VP4 | XC2VP7 |
| 0 | IO_L01N_0/VRP_0 | D5 | | | |
| 0 | IO_L01P_0/VRN_0 | D6 | | | |
| 0 | IO_L02N_0 | E6 | | | |
| 0 | IO_L02P_0 | E7 | | | |
| 0 | IO_L03N_0 | D7 | | | |
| 0 | IO_L03P_0/VREF_0 | C7 | | | |
| 0 | IO_L05_0/No_Pair | E8 | | | |
| 0 | IO_L06N_0 | D8 | | | |
| 0 | IO_L06P_0 | C8 | | | |
| 0 | IO_L07N_0 | F9 | | | |
| 0 | IO_L07P_0 | E9 | | | |
| 0 | IO_L09N_0 | D9 | | | |
| 0 | IO_L09P_0/VREF_0 | D10 | | | |
| 0 | IO_L67N_0 | F10 | | | |
| 0 | IO_L67P_0 | E10 | | | |
| 0 | IO_L69N_0 | C10 | | | |
| 0 | IO_L69P_0/VREF_0 | B11 | | | |
| 0 | IO_L74N_0/GCLK7P | F11 | | | |
| 0 | IO_L74P_0/GCLK6S | E11 | | | |
| 0 | IO_L75N_0/GCLK5P | D11 | | | |
| 0 | IO_L75P_0/GCLK4S | C11 | | | |
| | | | | | |
| 1 | IO_L75N_1/GCLK3P | C12 | | | |
| 1 | IO_L75P_1/GCLK2S | D12 | | | |
| 1 | IO_L74N_1/GCLK1P | E12 | | | |
| 1 | IO_L74P_1/GCLK0S | F12 | | | |
| 1 | IO_L69N_1/VREF_1 | B12 | | | |
| 1 | IO_L69P_1 | C13 | | | |
| 1 | IO_L67N_1 | E13 | | | |
| 1 | IO_L67P_1 | F13 | | | |
| 1 | IO_L09N_1/VREF_1 | D13 | | | |
| 1 | IO_L09P_1 | D14 | | | |
| 1 | IO_L07N_1 | E14 | | | |

*Table 6:* **FG456/FGG456 — XC2VP2, XC2VP4, and XC2VP7**

| Bank | Pin Description | Pin Number | No Connects | | |
|---|---|---|---|---|---|
| | | | XC2VP2 | XC2VP4 | XC2VP7 |
| 1 | IO_L07P_1 | F14 | | | |
| 1 | IO_L06N_1 | C15 | | | |
| 1 | IO_L06P_1 | D15 | | | |
| 1 | IO_L05_1/No_Pair | E15 | | | |
| 1 | IO_L03N_1/VREF_1 | C16 | | | |
| 1 | IO_L03P_1 | D16 | | | |
| 1 | IO_L02N_1 | E16 | | | |
| 1 | IO_L02P_1 | E17 | | | |
| 1 | IO_L01N_1/VRP_1 | D17 | | | |
| 1 | IO_L01P_1/VRN_1 | D18 | | | |
| | | | | | |
| 2 | IO_L01N_2/VRP_2 | C21 | | | |
| 2 | IO_L01P_2/VRN_2 | C22 | | | |
| 2 | IO_L02N_2 | D21 | | | |
| 2 | IO_L02P_2 | D22 | | | |
| 2 | IO_L03N_2 | E19 | | | |
| 2 | IO_L03P_2 | E20 | | | |
| 2 | IO_L04N_2/VREF_2 | E21 | | | |
| 2 | IO_L04P_2 | E22 | | | |
| 2 | IO_L06N_2 | F19 | | | |
| 2 | IO_L06P_2 | F20 | | | |
| 2 | IO_L43N_2 | F21 | NC | | |
| 2 | IO_L43P_2 | F22 | NC | | |
| 2 | IO_L46N_2/VREF_2 | F18 | NC | | |
| 2 | IO_L46P_2 | G18 | NC | | |
| 2 | IO_L48N_2 | G19 | NC | | |
| 2 | IO_L48P_2 | G20 | NC | | |
| 2 | IO_L49N_2 | G21 | NC | | |
| 2 | IO_L49P_2 | G22 | NC | | |
| 2 | IO_L50N_2 | H19 | NC | | |
| 2 | IO_L50P_2 | H20 | NC | | |
| 2 | IO_L52N_2/VREF_2 | H21 | NC | | |
| 2 | IO_L52P_2 | H22 | NC | | |
| 2 | IO_L54N_2 | H18 | NC | | |
| 2 | IO_L54P_2 | J17 | NC | | |
| 2 | IO_L55N_2 | J19 | NC | | |
| 2 | IO_L55P_2 | J20 | NC | | |

*Table 6:* **FG456/FGG456 — XC2VP2, XC2VP4, and XC2VP7**

| Bank | Pin Description | Pin Number | No Connects | | |
|---|---|---|---|---|---|
| | | | XC2VP2 | XC2VP4 | XC2VP7 |
| 2 | IO_L56N_2 | J21 | NC | | |
| 2 | IO_L56P_2 | J22 | NC | | |
| 2 | IO_L58N_2/VREF_2 | J18 | NC | | |
| 2 | IO_L58P_2 | K18 | NC | | |
| 2 | IO_L60N_2 | K19 | NC | | |
| 2 | IO_L60P_2 | K20 | NC | | |
| 2 | IO_L85N_2 | K21 | | | |
| 2 | IO_L85P_2 | K22 | | | |
| 2 | IO_L86N_2 | K17 | | | |
| 2 | IO_L86P_2 | L17 | | | |
| 2 | IO_L88N_2/VREF_2 | L18 | | | |
| 2 | IO_L88P_2 | L19 | | | |
| 2 | IO_L90N_2 | L20 | | | |
| 2 | IO_L90P_2 | L21 | | | |
| | | | | | |
| 3 | IO_L90N_3 | M21 | | | |
| 3 | IO_L90P_3 | M20 | | | |
| 3 | IO_L89N_3 | M19 | | | |
| 3 | IO_L89P_3 | M18 | | | |
| 3 | IO_L87N_3/VREF_3 | M17 | | | |
| 3 | IO_L87P_3 | N17 | | | |
| 3 | IO_L85N_3 | N22 | | | |
| 3 | IO_L85P_3 | N21 | | | |
| 3 | IO_L60N_3 | N20 | NC | | |
| 3 | IO_L60P_3 | N19 | NC | | |
| 3 | IO_L59N_3 | N18 | NC | | |
| 3 | IO_L59P_3 | P18 | NC | | |
| 3 | IO_L57N_3/VREF_3 | P22 | NC | | |
| 3 | IO_L57P_3 | P21 | NC | | |
| 3 | IO_L55N_3 | P20 | NC | | |
| 3 | IO_L55P_3 | P19 | NC | | |
| 3 | IO_L54N_3 | P17 | NC | | |
| 3 | IO_L54P_3 | R18 | NC | | |
| 3 | IO_L53N_3 | R22 | NC | | |
| 3 | IO_L53P_3 | R21 | NC | | |
| 3 | IO_L51N_3/VREF_3 | R20 | NC | | |
| 3 | IO_L51P_3 | R19 | NC | | |

*Table 6:* **FG456/FGG456 — XC2VP2, XC2VP4, and XC2VP7**

| Bank | Pin Description | Pin Number | No Connects | | |
|---|---|---|---|---|---|
| | | | XC2VP2 | XC2VP4 | XC2VP7 |
| 3 | IO_L49N_3 | T22 | NC | | |
| 3 | IO_L49P_3 | T21 | NC | | |
| 3 | IO_L48N_3 | T20 | NC | | |
| 3 | IO_L48P_3 | T19 | NC | | |
| 3 | IO_L47N_3 | T18 | NC | | |
| 3 | IO_L47P_3 | U18 | NC | | |
| 3 | IO_L45N_3/VREF_3 | U22 | NC | | |
| 3 | IO_L45P_3 | U21 | NC | | |
| 3 | IO_L43N_3 | U20 | NC | | |
| 3 | IO_L43P_3 | U19 | NC | | |
| 3 | IO_L06N_3 | V22 | | | |
| 3 | IO_L06P_3 | V21 | | | |
| 3 | IO_L05N_3 | V20 | | | |
| 3 | IO_L05P_3 | V19 | | | |
| 3 | IO_L03N_3/VREF_3 | W22 | | | |
| 3 | IO_L03P_3 | W21 | | | |
| 3 | IO_L02N_3 | Y22 | | | |
| 3 | IO_L02P_3 | Y21 | | | |
| 3 | IO_L01N_3/VRP_3 | AA22 | | | |
| 3 | IO_L01P_3/VRN_3 | AB21 | | | |
| | | | | | |
| 4 | IO_L01N_4/BUSY/DOUT(1) | W18 | | | |
| 4 | IO_L01P_4/INIT_B | W17 | | | |
| 4 | IO_L02N_4/D0/DIN(1) | V17 | | | |
| 4 | IO_L02P_4/D1 | V16 | | | |
| 4 | IO_L03N_4/D2 | W16 | | | |
| 4 | IO_L03P_4/D3 | Y16 | | | |
| 4 | IO_L05_4/No_Pair | V15 | | | |
| 4 | IO_L06N_4/VRP_4 | W15 | | | |
| 4 | IO_L06P_4/VRN_4 | Y15 | | | |
| 4 | IO_L07N_4 | U14 | | | |
| 4 | IO_L07P_4/VREF_4 | V14 | | | |
| 4 | IO_L09N_4 | W14 | | | |
| 4 | IO_L09P_4/VREF_4 | W13 | | | |
| 4 | IO_L67N_4 | U13 | | | |
| 4 | IO_L67P_4 | V13 | | | |
| 4 | IO_L69N_4 | Y13 | | | |

*Table 6:* **FG456/FGG456 — XC2VP2, XC2VP4, and XC2VP7**

| Bank | Pin Description | Pin Number | No Connects | | |
|---|---|---|---|---|---|
| | | | XC2VP2 | XC2VP4 | XC2VP7 |
| 4 | IO_L69P_4/VREF_4 | AA12 | | | |
| 4 | IO_L74N_4/GCLK3S | U12 | | | |
| 4 | IO_L74P_4/GCLK2P | V12 | | | |
| 4 | IO_L75N_4/GCLK1S | W12 | | | |
| 4 | IO_L75P_4/GCLK0P | Y12 | | | |
| | | | | | |
| 5 | IO_L75N_5/GCLK7S | Y11 | | | |
| 5 | IO_L75P_5/GCLK6P | W11 | | | |
| 5 | IO_L74N_5/GCLK5S | V11 | | | |
| 5 | IO_L74P_5/GCLK4P | U11 | | | |
| 5 | IO_L69N_5/VREF_5 | AA11 | | | |
| 5 | IO_L69P_5 | Y10 | | | |
| 5 | IO_L67N_5 | V10 | | | |
| 5 | IO_L67P_5 | U10 | | | |
| 5 | IO_L09N_5/VREF_5 | W10 | | | |
| 5 | IO_L09P_5 | W9 | | | |
| 5 | IO_L07N_5/VREF_5 | V9 | | | |
| 5 | IO_L07P_5 | U9 | | | |
| 5 | IO_L06N_5/VRP_5 | Y8 | | | |
| 5 | IO_L06P_5/VRN_5 | W8 | | | |
| 5 | IO_L05_5/No_Pair | V8 | | | |
| 5 | IO_L03N_5/D4 | Y7 | | | |
| 5 | IO_L03P_5/D5 | W7 | | | |
| 5 | IO_L02N_5/D6 | V7 | | | |
| 5 | IO_L02P_5/D7 | V6 | | | |
| 5 | IO_L01N_5/RDWR_B | W6 | | | |
| 5 | IO_L01P_5/CS_B | W5 | | | |
| | | | | | |
| 6 | IO_L01P_6/VRN_6 | AB2 | | | |
| 6 | IO_L01N_6/VRP_6 | AA1 | | | |
| 6 | IO_L02P_6 | Y2 | | | |
| 6 | IO_L02N_6 | Y1 | | | |
| 6 | IO_L03P_6 | W2 | | | |
| 6 | IO_L03N_6/VREF_6 | W1 | | | |
| 6 | IO_L05P_6 | V4 | | | |
| 6 | IO_L05N_6 | V3 | | | |
| 6 | IO_L06P_6 | V2 | | | |

*Table 6:* **FG456/FGG456 — XC2VP2, XC2VP4, and XC2VP7**

| Bank | Pin Description | Pin Number | No Connects | | |
|---|---|---|---|---|---|
| | | | XC2VP2 | XC2VP4 | XC2VP7 |
| 6 | IO_L06N_6 | V1 | | | |
| 6 | IO_L43P_6 | U4 | NC | | |
| 6 | IO_L43N_6 | U3 | NC | | |
| 6 | IO_L45P_6 | U2 | NC | | |
| 6 | IO_L45N_6/VREF_6 | U1 | NC | | |
| 6 | IO_L47P_6 | U5 | NC | | |
| 6 | IO_L47N_6 | T5 | NC | | |
| 6 | IO_L48P_6 | T4 | NC | | |
| 6 | IO_L48N_6 | T3 | NC | | |
| 6 | IO_L49P_6 | T2 | NC | | |
| 6 | IO_L49N_6 | T1 | NC | | |
| 6 | IO_L51P_6 | R4 | NC | | |
| 6 | IO_L51N_6/VREF_6 | R3 | NC | | |
| 6 | IO_L53P_6 | R2 | NC | | |
| 6 | IO_L53N_6 | R1 | NC | | |
| 6 | IO_L54P_6 | R5 | NC | | |
| 6 | IO_L54N_6 | P6 | NC | | |
| 6 | IO_L55P_6 | P4 | NC | | |
| 6 | IO_L55N_6 | P3 | NC | | |
| 6 | IO_L57P_6 | P2 | NC | | |
| 6 | IO_L57N_6/VREF_6 | P1 | NC | | |
| 6 | IO_L59P_6 | P5 | NC | | |
| 6 | IO_L59N_6 | N5 | NC | | |
| 6 | IO_L60P_6 | N4 | NC | | |
| 6 | IO_L60N_6 | N3 | NC | | |
| 6 | IO_L85P_6 | N2 | | | |
| 6 | IO_L85N_6 | N1 | | | |
| 6 | IO_L87P_6 | N6 | | | |
| 6 | IO_L87N_6/VREF_6 | M6 | | | |
| 6 | IO_L89P_6 | M5 | | | |
| 6 | IO_L89N_6 | M4 | | | |
| 6 | IO_L90P_6 | M3 | | | |
| 6 | IO_L90N_6 | M2 | | | |
| | | | | | |
| 7 | IO_L90P_7 | L2 | | | |
| 7 | IO_L90N_7 | L3 | | | |
| 7 | IO_L88P_7 | L4 | | | |

*Table 6:* **FG456/FGG456 — XC2VP2, XC2VP4, and XC2VP7**

| Bank | Pin Description | Pin Number | No Connects | | |
|---|---|---|---|---|---|
| | | | XC2VP2 | XC2VP4 | XC2VP7 |
| 7 | IO_L88N_7/VREF_7 | L5 | | | |
| 7 | IO_L86P_7 | L6 | | | |
| 7 | IO_L86N_7 | K6 | | | |
| 7 | IO_L85P_7 | K1 | | | |
| 7 | IO_L85N_7 | K2 | | | |
| 7 | IO_L60P_7 | K3 | NC | | |
| 7 | IO_L60N_7 | K4 | NC | | |
| 7 | IO_L58P_7 | K5 | NC | | |
| 7 | IO_L58N_7/VREF_7 | J5 | NC | | |
| 7 | IO_L56P_7 | J1 | NC | | |
| 7 | IO_L56N_7 | J2 | NC | | |
| 7 | IO_L55P_7 | J3 | NC | | |
| 7 | IO_L55N_7 | J4 | NC | | |
| 7 | IO_L54P_7 | J6 | NC | | |
| 7 | IO_L54N_7 | H5 | NC | | |
| 7 | IO_L52P_7 | H1 | NC | | |
| 7 | IO_L52N_7/VREF_7 | H2 | NC | | |
| 7 | IO_L50P_7 | H3 | NC | | |
| 7 | IO_L50N_7 | H4 | NC | | |
| 7 | IO_L49P_7 | G1 | NC | | |
| 7 | IO_L49N_7 | G2 | NC | | |
| 7 | IO_L48P_7 | G3 | NC | | |
| 7 | IO_L48N_7 | G4 | NC | | |
| 7 | IO_L46P_7 | G5 | NC | | |
| 7 | IO_L46N_7/VREF_7 | F5 | NC | | |
| 7 | IO_L43P_7 | F1 | NC | | |
| 7 | IO_L43N_7 | F2 | NC | | |
| 7 | IO_L06P_7 | F3 | | | |
| 7 | IO_L06N_7 | F4 | | | |
| 7 | IO_L04P_7 | E1 | | | |
| 7 | IO_L04N_7/VREF_7 | E2 | | | |
| 7 | IO_L03P_7 | E3 | | | |
| 7 | IO_L03N_7 | E4 | | | |
| 7 | IO_L02P_7 | D1 | | | |
| 7 | IO_L02N_7 | D2 | | | |
| 7 | IO_L01P_7/VRN_7 | C1 | | | |
| 7 | IO_L01N_7/VRP_7 | C2 | | | |

*Table 6:* **FG456/FGG456 — XC2VP2, XC2VP4, and XC2VP7**

| Bank | Pin Description | Pin Number | No Connects | | |
|---|---|---|---|---|---|
| | | | XC2VP2 | XC2VP4 | XC2VP7 |
| | | | | | |
| 0 | VCCO_0 | G9 | | | |
| 0 | VCCO_0 | G11 | | | |
| 0 | VCCO_0 | G10 | | | |
| 0 | VCCO_0 | F8 | | | |
| 0 | VCCO_0 | F7 | | | |
| 1 | VCCO_1 | G14 | | | |
| 1 | VCCO_1 | G13 | | | |
| 1 | VCCO_1 | G12 | | | |
| 1 | VCCO_1 | F16 | | | |
| 1 | VCCO_1 | F15 | | | |
| 2 | VCCO_2 | L16 | | | |
| 2 | VCCO_2 | K16 | | | |
| 2 | VCCO_2 | J16 | | | |
| 2 | VCCO_2 | H17 | | | |
| 2 | VCCO_2 | G17 | | | |
| 3 | VCCO_3 | T17 | | | |
| 3 | VCCO_3 | R17 | | | |
| 3 | VCCO_3 | P16 | | | |
| 3 | VCCO_3 | N16 | | | |
| 3 | VCCO_3 | M16 | | | |
| 4 | VCCO_4 | U16 | | | |
| 4 | VCCO_4 | U15 | | | |
| 4 | VCCO_4 | T14 | | | |
| 4 | VCCO_4 | T13 | | | |
| 4 | VCCO_4 | T12 | | | |
| 5 | VCCO_5 | U8 | | | |
| 5 | VCCO_5 | U7 | | | |
| 5 | VCCO_5 | T9 | | | |
| 5 | VCCO_5 | T11 | | | |
| 5 | VCCO_5 | T10 | | | |
| 6 | VCCO_6 | T6 | | | |
| 6 | VCCO_6 | R6 | | | |
| 6 | VCCO_6 | P7 | | | |
| 6 | VCCO_6 | N7 | | | |
| 6 | VCCO_6 | M7 | | | |
| 7 | VCCO_7 | L7 | | | |

*Table 6:* **FG456/FGG456 — XC2VP2, XC2VP4, and XC2VP7**

| Bank | Pin Description | Pin Number | No Connects | | |
|---|---|---|---|---|---|
| | | | XC2VP2 | XC2VP4 | XC2VP7 |
| 7 | VCCO_7 | K7 | | | |
| 7 | VCCO_7 | J7 | | | |
| 7 | VCCO_7 | H6 | | | |
| 7 | VCCO_7 | G6 | | | |
| | | | | | |
| N/A | CCLK | W20 | | | |
| N/A | PROG_B | B1 | | | |
| N/A | DONE | Y18 | | | |
| N/A | M0 | Y4 | | | |
| N/A | M1 | W3 | | | |
| N/A | M2 | Y5 | | | |
| N/A | TCK | B22 | | | |
| N/A | TDI | D3 | | | |
| N/A | TDO | D20 | | | |
| N/A | TMS | A21 | | | |
| N/A | PWRDWN_B | Y19 | | | |
| N/A | HSWAP_EN | A2 | | | |
| N/A | RSVD | C18 | | | |
| N/A | VBATT | C19 | | | |
| N/A | DXP | C4 | | | |
| N/A | DXN | C5 | | | |
| N/A | AVCCAUXTX4 | B4 | NC | NC | |
| N/A | VTTXPAD4 | B3 | NC | NC | |
| N/A | TXNPAD4 | A3 | NC | NC | |
| N/A | TXPPAD4 | A4 | NC | NC | |
| N/A | GNDA4 | C6 | NC | NC | |
| N/A | RXPPAD4 | A5 | NC | NC | |
| N/A | RXNPAD4 | A6 | NC | NC | |
| N/A | VTRXPAD4 | B5 | NC | NC | |
| N/A | AVCCAUXRX4 | B6 | NC | NC | |
| N/A | AVCCAUXTX6 | B8 | | | |
| N/A | VTTXPAD6 | B7 | | | |
| N/A | TXNPAD6 | A7 | | | |
| N/A | TXPPAD6 | A8 | | | |
| N/A | GNDA6 | C9 | | | |
| N/A | RXPPAD6 | A9 | | | |
| N/A | RXNPAD6 | A10 | | | |

*Table 6:* **FG456/FGG456 — XC2VP2, XC2VP4, and XC2VP7**

| Bank | Pin Description | Pin Number | No Connects | | |
|---|---|---|---|---|---|
| | | | XC2VP2 | XC2VP4 | XC2VP7 |
| N/A | VTRXPAD6 | B9 | | | |
| N/A | AVCCAUXRX6 | B10 | | | |
| N/A | AVCCAUXTX7 | B14 | | | |
| N/A | VTTXPAD7 | B13 | | | |
| N/A | TXNPAD7 | A13 | | | |
| N/A | TXPPAD7 | A14 | | | |
| N/A | GNDA7 | C14 | | | |
| N/A | RXPPAD7 | A15 | | | |
| N/A | RXNPAD7 | A16 | | | |
| N/A | VTRXPAD7 | B15 | | | |
| N/A | AVCCAUXRX7 | B16 | | | |
| N/A | AVCCAUXTX9 | B18 | NC | NC | |
| N/A | VTTXPAD9 | B17 | NC | NC | |
| N/A | TXNPAD9 | A17 | NC | NC | |
| N/A | TXPPAD9 | A18 | NC | NC | |
| N/A | GNDA9 | C17 | NC | NC | |
| N/A | RXPPAD9 | A19 | NC | NC | |
| N/A | RXNPAD9 | A20 | NC | NC | |
| N/A | VTRXPAD9 | B19 | NC | NC | |
| N/A | AVCCAUXRX9 | B20 | NC | NC | |
| N/A | AVCCAUXRX16 | AA20 | NC | NC | |
| N/A | VTRXPAD16 | AA19 | NC | NC | |
| N/A | RXNPAD16 | AB20 | NC | NC | |
| N/A | RXPPAD16 | AB19 | NC | NC | |
| N/A | GNDA16 | Y17 | NC | NC | |
| N/A | TXPPAD16 | AB18 | NC | NC | |
| N/A | TXNPAD16 | AB17 | NC | NC | |
| N/A | VTTXPAD16 | AA17 | NC | NC | |
| N/A | AVCCAUXTX16 | AA18 | NC | NC | |
| N/A | AVCCAUXRX18 | AA16 | | | |
| N/A | VTRXPAD18 | AA15 | | | |
| N/A | RXNPAD18 | AB16 | | | |
| N/A | RXPPAD18 | AB15 | | | |
| N/A | GNDA18 | Y14 | | | |
| N/A | TXPPAD18 | AB14 | | | |
| N/A | TXNPAD18 | AB13 | | | |
| N/A | VTTXPAD18 | AA13 | | | |

*Table 6:* **FG456/FGG456 — XC2VP2, XC2VP4, and XC2VP7**

| Bank | Pin Description | Pin Number | No Connects | | |
|---|---|---|---|---|---|
| | | | XC2VP2 | XC2VP4 | XC2VP7 |
| N/A | AVCCAUXTX18 | AA14 | | | |
| N/A | AVCCAUXRX19 | AA10 | | | |
| N/A | VTRXPAD19 | AA9 | | | |
| N/A | RXNPAD19 | AB10 | | | |
| N/A | RXPPAD19 | AB9 | | | |
| N/A | GNDA19 | Y9 | | | |
| N/A | TXPPAD19 | AB8 | | | |
| N/A | TXNPAD19 | AB7 | | | |
| N/A | VTTXPAD19 | AA7 | | | |
| N/A | AVCCAUXTX19 | AA8 | | | |
| N/A | AVCCAUXRX21 | AA6 | NC | NC | |
| N/A | VTRXPAD21 | AA5 | NC | NC | |
| N/A | RXNPAD21 | AB6 | NC | NC | |
| N/A | RXPPAD21 | AB5 | NC | NC | |
| N/A | GNDA21 | Y6 | NC | NC | |
| N/A | TXPPAD21 | AB4 | NC | NC | |
| N/A | TXNPAD21 | AB3 | NC | NC | |
| N/A | VTTXPAD21 | AA3 | NC | NC | |
| N/A | AVCCAUXTX21 | AA4 | NC | NC | |
| | | | | | |
| N/A | VCCINT | U6 | | | |
| N/A | VCCINT | U17 | | | |
| N/A | VCCINT | T8 | | | |
| N/A | VCCINT | T7 | | | |
| N/A | VCCINT | T16 | | | |
| N/A | VCCINT | T15 | | | |
| N/A | VCCINT | R7 | | | |
| N/A | VCCINT | R16 | | | |
| N/A | VCCINT | H7 | | | |
| N/A | VCCINT | H16 | | | |
| N/A | VCCINT | G8 | | | |
| N/A | VCCINT | G7 | | | |
| N/A | VCCINT | G16 | | | |
| N/A | VCCINT | G15 | | | |
| N/A | VCCINT | F6 | | | |
| N/A | VCCINT | F17 | | | |
| N/A | VCCAUX | M22 | | | |

*Table 6:* **FG456/FGG456 — XC2VP2, XC2VP4, and XC2VP7**

| Bank | Pin Description | Pin Number | No Connects | | |
|---|---|---|---|---|---|
| | | | XC2VP2 | XC2VP4 | XC2VP7 |
| N/A | VCCAUX | L1 | | | |
| N/A | VCCAUX | B21 | | | |
| N/A | VCCAUX | B2 | | | |
| N/A | VCCAUX | AB11 | | | |
| N/A | VCCAUX | AA21 | | | |
| N/A | VCCAUX | AA2 | | | |
| N/A | VCCAUX | A12 | | | |
| N/A | GND | Y3 | | | |
| N/A | GND | Y20 | | | |
| N/A | GND | W4 | | | |
| N/A | GND | W19 | | | |
| N/A | GND | V5 | | | |
| N/A | GND | V18 | | | |
| N/A | GND | P9 | | | |
| N/A | GND | P14 | | | |
| N/A | GND | P13 | | | |
| N/A | GND | P12 | | | |
| N/A | GND | P11 | | | |
| N/A | GND | P10 | | | |
| N/A | GND | N9 | | | |
| N/A | GND | N14 | | | |
| N/A | GND | N13 | | | |
| N/A | GND | N12 | | | |
| N/A | GND | N11 | | | |
| N/A | GND | N10 | | | |
| N/A | GND | M9 | | | |
| N/A | GND | M14 | | | |
| N/A | GND | M13 | | | |
| N/A | GND | M12 | | | |
| N/A | GND | M11 | | | |
| N/A | GND | M10 | | | |
| N/A | GND | M1 | | | |
| N/A | GND | L9 | | | |
| N/A | GND | L22 | | | |
| N/A | GND | L14 | | | |
| N/A | GND | L13 | | | |
| N/A | GND | L12 | | | |

*Table 6:* **FG456/FGG456 — XC2VP2, XC2VP4, and XC2VP7**

| Bank | Pin Description | Pin Number | No Connects | | |
|---|---|---|---|---|---|
| | | | XC2VP2 | XC2VP4 | XC2VP7 |
| N/A | GND | L11 | | | |
| N/A | GND | L10 | | | |
| N/A | GND | K9 | | | |
| N/A | GND | K14 | | | |
| N/A | GND | K13 | | | |
| N/A | GND | K12 | | | |
| N/A | GND | K11 | | | |
| N/A | GND | K10 | | | |
| N/A | GND | J9 | | | |
| N/A | GND | J14 | | | |
| N/A | GND | J13 | | | |
| N/A | GND | J12 | | | |
| N/A | GND | J11 | | | |
| N/A | GND | J10 | | | |
| N/A | GND | E5 | | | |
| N/A | GND | E18 | | | |
| N/A | GND | D4 | | | |
| N/A | GND | D19 | | | |
| N/A | GND | C3 | | | |
| N/A | GND | C20 | | | |
| N/A | GND | AB22 | | | |
| N/A | GND | AB12 | | | |
| N/A | GND | AB1 | | | |
| N/A | GND | A22 | | | |
| N/A | GND | A11 | | | |
| N/A | GND | A1 | | | |

**Notes:**
1. See Table 4 for an explanation of the signals available on this pin.

## FG456/FGG456 Fine-Pitch BGA Package Specifications (1.00mm pitch)

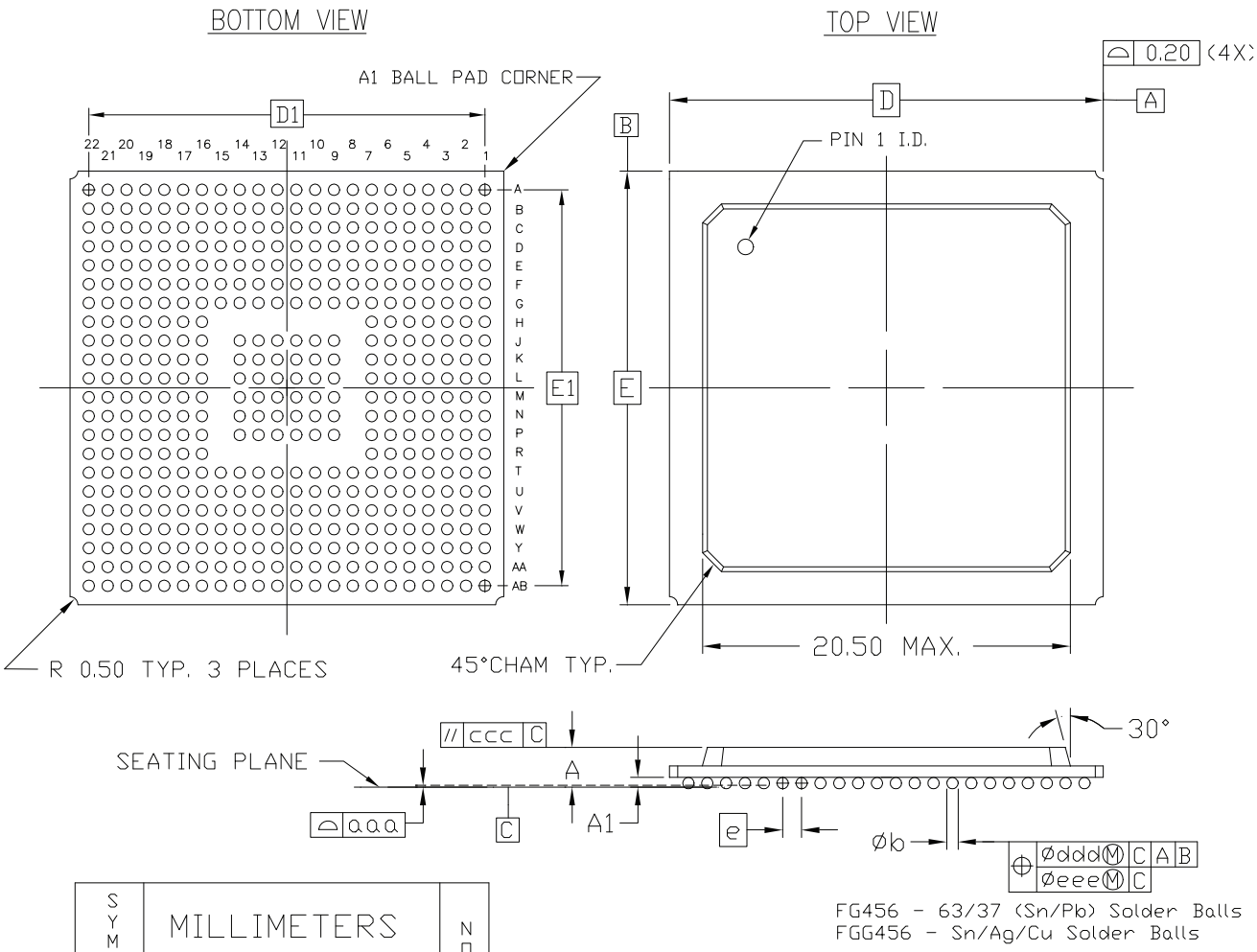


| SYMBOL | MILLIMETERS | | | NOTE |
|---|---|---|---|---|
| | MIN. | NOM. | MAX. | |
| A | — | — | 2.60 | 3 |
| $A_1$ | 0.35 | 0.50 | 0.60 | |
| D/E | 23.00 BSC | | | |
| $D_1/E_1$ | 21.00 REF | | | |
| e | 1.00 BSC | | | |
| Øb | 0.50 | 0.60 | 0.70 | |
| aaa | — | — | 0.20 | |
| ccc | — | — | 0.35 | |
| ddd | — | — | 0.30 | |
| eee | — | — | 0.10 | |
| M | 22 | | | 2 |

NOTES:

1. ALL DIMENSIONS AND TOLERANCES CONFORM TO ANSI Y14.5M-1994
2. SYMBOL 'M' IS THE BALL MATRIX SIZE.
3. NOMINAL 'A' DIMENSION IS TYPICALLY 2.20mm.
4. CONFORMS TO JEDEC MS-034-AAJ-1 (DEPOPULATED)

*Figure 2:* **FG456/FGG456 Fine-Pitch BGA Package Specifications**

## FG676/FGG676 Fine-Pitch BGA Package

As shown in Table 7, XC2VP20, XC2VP30, and XC2VP40 Virtex-II Pro devices are available in the FG676/FGG676 fine-pitch BGA package. The pins in these devices are the same, except for the differences shown in the "No Connects" column. Following this table are the FG676/FGG676 Fine-Pitch BGA Package Specifications (1.00mm pitch).

*Table 7:* **FG676/FGG676 — XC2VP20, XC2VP30, and XC2VP40**

| Bank | Pin Description | Pin Number | No Connects | | |
|---|---|---|---|---|---|
| | | | XC2VP20 | XC2VP30 | XC2VP40 |
| 0 | IO_L01N_0/VRP_0 | E5 | | | |
| 0 | IO_L01P_0/VRN_0 | D5 | | | |
| 0 | IO_L02N_0 | E6 | | | |
| 0 | IO_L02P_0 | D6 | | | |
| 0 | IO_L03N_0 | G7 | | | |
| 0 | IO_L03P_0/VREF_0 | F7 | | | |
| 0 | IO_L05_0/No_Pair | E7 | | | |
| 0 | IO_L06N_0 | D7 | | | |
| 0 | IO_L06P_0 | C7 | | | |
| 0 | IO_L07N_0 | H8 | | | |
| 0 | IO_L07P_0 | G8 | | | |
| 0 | IO_L09N_0 | F8 | | | |
| 0 | IO_L09P_0/VREF_0 | E8 | | | |
| 0 | IO_L37N_0 | B8 | | | |
| 0 | IO_L37P_0 | A8 | | | |
| 0 | IO_L39N_0 | H9 | | | |
| 0 | IO_L39P_0 | G9 | | | |
| 0 | IO_L43N_0 | F9 | | | |
| 0 | IO_L43P_0 | E9 | | | |
| 0 | IO_L45N_0 | D9 | | | |
| 0 | IO_L45P_0/VREF_0 | C9 | | | |
| 0 | IO_L46N_0 | H10 | | | |
| 0 | IO_L46P_0 | H11 | | | |
| 0 | IO_L48N_0 | E10 | | | |
| 0 | IO_L48P_0 | E11 | | | |
| 0 | IO_L49N_0 | D10 | | | |
| 0 | IO_L49P_0 | C10 | | | |
| 0 | IO_L50_0/No_Pair | G11 | | | |
| 0 | IO_L53_0/No_Pair | F11 | | | |
| 0 | IO_L54N_0 | J12 | | | |
| 0 | IO_L54P_0 | H12 | | | |

*Table 7:* **FG676/FGG676 — XC2VP20, XC2VP30, and XC2VP40**

| Bank | Pin Description | Pin Number | No Connects | | |
|---|---|---|---|---|---|
| | | | XC2VP20 | XC2VP30 | XC2VP40 |
| 0 | IO_L55N_0 | G12 | | | |
| 0 | IO_L55P_0 | F12 | | | |
| 0 | IO_L57N_0 | E12 | | | |
| 0 | IO_L57P_0/VREF_0 | F13 | | | |
| 0 | IO_L67N_0 | D12 | | | |
| 0 | IO_L67P_0 | C12 | | | |
| 0 | IO_L69N_0 | J13 | | | |
| 0 | IO_L69P_0/VREF_0 | H13 | | | |
| 0 | IO_L74N_0/GCLK7P | E13 | | | |
| 0 | IO_L74P_0/GCLK6S | D13 | | | |
| 0 | IO_L75N_0/GCLK5P | C13 | | | |
| 0 | IO_L75P_0/GCLK4S | B13 | | | |
| | | | | | |
| 1 | IO_L75N_1/GCLK3P | B14 | | | |
| 1 | IO_L75P_1/GCLK2S | C14 | | | |
| 1 | IO_L74N_1/GCLK1P | D14 | | | |
| 1 | IO_L74P_1/GCLK0S | E14 | | | |
| 1 | IO_L69N_1/VREF_1 | H14 | | | |
| 1 | IO_L69P_1 | J14 | | | |
| 1 | IO_L67N_1 | C15 | | | |
| 1 | IO_L67P_1 | D15 | | | |
| 1 | IO_L57N_1/VREF_1 | F14 | | | |
| 1 | IO_L57P_1 | E15 | | | |
| 1 | IO_L55N_1 | F15 | | | |
| 1 | IO_L55P_1 | G15 | | | |
| 1 | IO_L54N_1 | H15 | | | |
| 1 | IO_L54P_1 | J15 | | | |
| 1 | IO_L53_1/No_Pair | F16 | | | |
| 1 | IO_L50_1/No_Pair | G16 | | | |
| 1 | IO_L49N_1 | C17 | | | |
| 1 | IO_L49P_1 | D17 | | | |
| 1 | IO_L48N_1 | E16 | | | |
| 1 | IO_L48P_1 | E17 | | | |
| 1 | IO_L46N_1 | H16 | | | |
| 1 | IO_L46P_1 | H17 | | | |

*Table 7:* **FG676/FGG676 — XC2VP20, XC2VP30, and XC2VP40**

| Bank | Pin Description | Pin Number | No Connects | | |
|---|---|---|---|---|---|
| | | | XC2VP20 | XC2VP30 | XC2VP40 |
| 1 | IO_L45N_1/VREF_1 | C18 | | | |
| 1 | IO_L45P_1 | D18 | | | |
| 1 | IO_L43N_1 | E18 | | | |
| 1 | IO_L43P_1 | F18 | | | |
| 1 | IO_L39N_1 | G18 | | | |
| 1 | IO_L39P_1 | H18 | | | |
| 1 | IO_L37N_1 | A19 | | | |
| 1 | IO_L37P_1 | B19 | | | |
| 1 | IO_L09N_1/VREF_1 | E19 | | | |
| 1 | IO_L09P_1 | F19 | | | |
| 1 | IO_L07N_1 | G19 | | | |
| 1 | IO_L07P_1 | H19 | | | |
| 1 | IO_L06N_1 | C20 | | | |
| 1 | IO_L06P_1 | D20 | | | |
| 1 | IO_L05_1/No_Pair | E20 | | | |
| 1 | IO_L03N_1/VREF_1 | F20 | | | |
| 1 | IO_L03P_1 | G20 | | | |
| 1 | IO_L02N_1 | D21 | | | |
| 1 | IO_L02P_1 | E21 | | | |
| 1 | IO_L01N_1/VRP_1 | D22 | | | |
| 1 | IO_L01P_1/VRN_1 | E22 | | | |
| | | | | | |
| 2 | IO_L01N_2/VRP_2 | C25 | | | |
| 2 | IO_L01P_2/VRN_2 | C26 | | | |
| 2 | IO_L02N_2 | D25 | | | |
| 2 | IO_L02P_2 | D26 | | | |
| 2 | IO_L03N_2 | E23 | | | |
| 2 | IO_L03P_2 | F22 | | | |
| 2 | IO_L04N_2/VREF_2 | E25 | | | |
| 2 | IO_L04P_2 | E26 | | | |
| 2 | IO_L06N_2 | F21 | | | |
| 2 | IO_L06P_2 | G21 | | | |
| 2 | IO_L24N_2 | F23 | NC | | |
| 2 | IO_L24P_2 | F24 | NC | | |
| 2 | IO_L31N_2 | F25 | | | |

*Table 7:* **FG676/FGG676 — XC2VP20, XC2VP30, and XC2VP40**

| Bank | Pin Description | Pin Number | No Connects | | |
|---|---|---|---|---|---|
| | | | XC2VP20 | XC2VP30 | XC2VP40 |
| 2 | IO_L31P_2 | F26 | | | |
| 2 | IO_L32N_2 | G22 | | | |
| 2 | IO_L32P_2 | H22 | | | |
| 2 | IO_L34N_2/VREF_2 | G23 | | | |
| 2 | IO_L34P_2 | G24 | | | |
| 2 | IO_L36N_2 | G25 | | | |
| 2 | IO_L36P_2 | G26 | | | |
| 2 | IO_L37N_2 | H20 | | | |
| 2 | IO_L37P_2 | H21 | | | |
| 2 | IO_L38N_2 | H25 | | | |
| 2 | IO_L38P_2 | H26 | | | |
| 2 | IO_L40N_2/VREF_2 | J19 | | | |
| 2 | IO_L40P_2 | J20 | | | |
| 2 | IO_L42N_2 | J21 | | | |
| 2 | IO_L42P_2 | J22 | | | |
| 2 | IO_L43N_2 | J23 | | | |
| 2 | IO_L43P_2 | J24 | | | |
| 2 | IO_L44N_2 | J25 | | | |
| 2 | IO_L44P_2 | J26 | | | |
| 2 | IO_L46N_2/VREF_2 | K19 | | | |
| 2 | IO_L46P_2 | L19 | | | |
| 2 | IO_L48N_2 | K22 | | | |
| 2 | IO_L48P_2 | K23 | | | |
| 2 | IO_L49N_2 | K24 | | | |
| 2 | IO_L49P_2 | L24 | | | |
| 2 | IO_L50N_2 | K25 | | | |
| 2 | IO_L50P_2 | K26 | | | |
| 2 | IO_L52N_2/VREF_2 | L20 | | | |
| 2 | IO_L52P_2 | M20 | | | |
| 2 | IO_L54N_2 | L21 | | | |
| 2 | IO_L54P_2 | L22 | | | |
| 2 | IO_L55N_2 | L25 | | | |
| 2 | IO_L55P_2 | L26 | | | |
| 2 | IO_L56N_2 | M18 | | | |
| 2 | IO_L56P_2 | M19 | | | |

*Table 7:* **FG676/FGG676 — XC2VP20, XC2VP30, and XC2VP40**

| Bank | Pin Description | Pin Number | No Connects | | |
|---|---|---|---|---|---|
| | | | XC2VP20 | XC2VP30 | XC2VP40 |
| 2 | IO_L58N_2/VREF_2 | M21 | | | |
| 2 | IO_L58P_2 | N21 | | | |
| 2 | IO_L60N_2 | M22 | | | |
| 2 | IO_L60P_2 | M23 | | | |
| 2 | IO_L85N_2 | M25 | | | |
| 2 | IO_L85P_2 | M26 | | | |
| 2 | IO_L86N_2 | N18 | | | |
| 2 | IO_L86P_2 | N19 | | | |
| 2 | IO_L88N_2/VREF_2 | N22 | | | |
| 2 | IO_L88P_2 | N23 | | | |
| 2 | IO_L90N_2 | N24 | | | |
| 2 | IO_L90P_2 | N25 | | | |
| | | | | | |
| 3 | IO_L90N_3 | P25 | | | |
| 3 | IO_L90P_3 | P24 | | | |
| 3 | IO_L89N_3 | P23 | | | |
| 3 | IO_L89P_3 | P22 | | | |
| 3 | IO_L87N_3/VREF_3 | P19 | | | |
| 3 | IO_L87P_3 | P18 | | | |
| 3 | IO_L85N_3 | R26 | | | |
| 3 | IO_L85P_3 | R25 | | | |
| 3 | IO_L60N_3 | R23 | | | |
| 3 | IO_L60P_3 | R22 | | | |
| 3 | IO_L59N_3 | P21 | | | |
| 3 | IO_L59P_3 | R21 | | | |
| 3 | IO_L57N_3/VREF_3 | R19 | | | |
| 3 | IO_L57P_3 | R18 | | | |
| 3 | IO_L55N_3 | T26 | | | |
| 3 | IO_L55P_3 | T25 | | | |
| 3 | IO_L54N_3 | T22 | | | |
| 3 | IO_L54P_3 | T21 | | | |
| 3 | IO_L53N_3 | R20 | | | |
| 3 | IO_L53P_3 | T20 | | | |
| 3 | IO_L51N_3/VREF_3 | U26 | | | |
| 3 | IO_L51P_3 | U25 | | | |

*Table 7:* **FG676/FGG676 — XC2VP20, XC2VP30, and XC2VP40**

| Bank | Pin Description | Pin Number | No Connects | | |
|---|---|---|---|---|---|
| | | | XC2VP20 | XC2VP30 | XC2VP40 |
| 3 | IO_L49N_3 | T24 | | | |
| 3 | IO_L49P_3 | U24 | | | |
| 3 | IO_L48N_3 | U23 | | | |
| 3 | IO_L48P_3 | U22 | | | |
| 3 | IO_L47N_3 | T19 | | | |
| 3 | IO_L47P_3 | U19 | | | |
| 3 | IO_L45N_3/VREF_3 | V26 | | | |
| 3 | IO_L45P_3 | V25 | | | |
| 3 | IO_L43N_3 | V24 | | | |
| 3 | IO_L43P_3 | V23 | | | |
| 3 | IO_L42N_3 | V22 | | | |
| 3 | IO_L42P_3 | V21 | | | |
| 3 | IO_L41N_3 | V20 | | | |
| 3 | IO_L41P_3 | V19 | | | |
| 3 | IO_L39N_3/VREF_3 | W26 | | | |
| 3 | IO_L39P_3 | W25 | | | |
| 3 | IO_L37N_3 | W21 | | | |
| 3 | IO_L37P_3 | W20 | | | |
| 3 | IO_L36N_3 | Y26 | | | |
| 3 | IO_L36P_3 | Y25 | | | |
| 3 | IO_L35N_3 | Y24 | | | |
| 3 | IO_L35P_3 | Y23 | | | |
| 3 | IO_L33N_3/VREF_3 | W22 | | | |
| 3 | IO_L33P_3 | Y22 | | | |
| 3 | IO_L31N_3 | AA26 | | | |
| 3 | IO_L31P_3 | AA25 | | | |
| 3 | IO_L24N_3 | AA24 | NC | | |
| 3 | IO_L24P_3 | AA23 | NC | | |
| 3 | IO_L23N_3 | Y21 | NC | | |
| 3 | IO_L23P_3 | AA21 | NC | | |
| 3 | IO_L06N_3 | AB26 | | | |
| 3 | IO_L06P_3 | AB25 | | | |
| 3 | IO_L05N_3 | AA22 | | | |
| 3 | IO_L05P_3 | AB23 | | | |
| 3 | IO_L03N_3/VREF_3 | AC26 | | | |

*Table 7:* **FG676/FGG676 — XC2VP20, XC2VP30, and XC2VP40**

| Bank | Pin Description | Pin Number | No Connects | | |
|---|---|---|---|---|---|
| | | | XC2VP20 | XC2VP30 | XC2VP40 |
| 3 | IO_L03P_3 | AC25 | | | |
| 3 | IO_L02N_3 | AC24 | | | |
| 3 | IO_L02P_3 | AD25 | | | |
| 3 | IO_L01N_3/VRP_3 | AD26 | | | |
| 3 | IO_L01P_3/VRN_3 | AE26 | | | |
| | | | | | |
| 4 | IO_L01N_4/BUSY/DOUT(1) | AB22 | | | |
| 4 | IO_L01P_4/INIT_B | AC22 | | | |
| 4 | IO_L02N_4/D0/DIN(1) | AB21 | | | |
| 4 | IO_L02P_4/D1 | AC21 | | | |
| 4 | IO_L03N_4/D2 | Y20 | | | |
| 4 | IO_L03P_4/D3 | AA20 | | | |
| 4 | IO_L05_4/No_Pair | AB20 | | | |
| 4 | IO_L06N_4/VRP_4 | AC20 | | | |
| 4 | IO_L06P_4/VRN_4 | AD20 | | | |
| 4 | IO_L07N_4 | W19 | | | |
| 4 | IO_L07P_4/VREF_4 | Y19 | | | |
| 4 | IO_L09N_4 | AA19 | | | |
| 4 | IO_L09P_4/VREF_4 | AB19 | | | |
| 4 | IO_L37N_4 | AE19 | | | |
| 4 | IO_L37P_4 | AF19 | | | |
| 4 | IO_L39N_4 | W18 | | | |
| 4 | IO_L39P_4 | Y18 | | | |
| 4 | IO_L43N_4 | AA18 | | | |
| 4 | IO_L43P_4 | AB18 | | | |
| 4 | IO_L45N_4 | AC18 | | | |
| 4 | IO_L45P_4/VREF_4 | AD18 | | | |
| 4 | IO_L46N_4 | W17 | | | |
| 4 | IO_L46P_4 | W16 | | | |
| 4 | IO_L48N_4 | AB17 | | | |
| 4 | IO_L48P_4 | AB16 | | | |
| 4 | IO_L49N_4 | AC17 | | | |
| 4 | IO_L49P_4 | AD17 | | | |
| 4 | IO_L50_4/No_Pair | Y16 | | | |
| 4 | IO_L53_4/No_Pair | AA16 | | | |

*Table 7:* **FG676/FGG676 — XC2VP20, XC2VP30, and XC2VP40**

| Bank | Pin Description | Pin Number | No Connects | | |
|---|---|---|---|---|---|
| | | | XC2VP20 | XC2VP30 | XC2VP40 |
| 4 | IO_L54N_4 | V15 | | | |
| 4 | IO_L54P_4 | W15 | | | |
| 4 | IO_L55N_4 | Y15 | | | |
| 4 | IO_L55P_4 | AA15 | | | |
| 4 | IO_L57N_4 | AB15 | | | |
| 4 | IO_L57P_4/VREF_4 | AA14 | | | |
| 4 | IO_L67N_4 | AC15 | | | |
| 4 | IO_L67P_4 | AD15 | | | |
| 4 | IO_L69N_4 | V14 | | | |
| 4 | IO_L69P_4/VREF_4 | W14 | | | |
| 4 | IO_L74N_4/GCLK3S | AB14 | | | |
| 4 | IO_L74P_4/GCLK2P | AC14 | | | |
| 4 | IO_L75N_4/GCLK1S | AD14 | | | |
| 4 | IO_L75P_4/GCLK0P | AE14 | | | |
| | | | | | |
| 5 | IO_L75N_5/GCLK7S | AE13 | | | |
| 5 | IO_L75P_5/GCLK6P | AD13 | | | |
| 5 | IO_L74N_5/GCLK5S | AC13 | | | |
| 5 | IO_L74P_5/GCLK4P | AB13 | | | |
| 5 | IO_L69N_5/VREF_5 | W13 | | | |
| 5 | IO_L69P_5 | V13 | | | |
| 5 | IO_L67N_5 | AD12 | | | |
| 5 | IO_L67P_5 | AC12 | | | |
| 5 | IO_L57N_5/VREF_5 | AA13 | | | |
| 5 | IO_L57P_5 | AB12 | | | |
| 5 | IO_L55N_5 | AA12 | | | |
| 5 | IO_L55P_5 | Y12 | | | |
| 5 | IO_L54N_5 | W12 | | | |
| 5 | IO_L54P_5 | V12 | | | |
| 5 | IO_L53_5/No_Pair | AA11 | | | |
| 5 | IO_L50_5/No_Pair | Y11 | | | |
| 5 | IO_L49N_5 | AD10 | | | |
| 5 | IO_L49P_5 | AC10 | | | |
| 5 | IO_L48N_5 | AB11 | | | |
| 5 | IO_L48P_5 | AB10 | | | |

*Table 7:* **FG676/FGG676 — XC2VP20, XC2VP30, and XC2VP40**

| Bank | Pin Description | Pin Number | No Connects | | |
|---|---|---|---|---|---|
| | | | XC2VP20 | XC2VP30 | XC2VP40 |
| 5 | IO_L46N_5 | W11 | | | |
| 5 | IO_L46P_5 | W10 | | | |
| 5 | IO_L45N_5/VREF_5 | AD9 | | | |
| 5 | IO_L45P_5 | AC9 | | | |
| 5 | IO_L43N_5 | AB9 | | | |
| 5 | IO_L43P_5 | AA9 | | | |
| 5 | IO_L39N_5 | Y9 | | | |
| 5 | IO_L39P_5 | W9 | | | |
| 5 | IO_L37N_5 | AF8 | | | |
| 5 | IO_L37P_5 | AE8 | | | |
| 5 | IO_L09N_5/VREF_5 | AB8 | | | |
| 5 | IO_L09P_5 | AA8 | | | |
| 5 | IO_L07N_5/VREF_5 | Y8 | | | |
| 5 | IO_L07P_5 | W8 | | | |
| 5 | IO_L06N_5/VRP_5 | AD7 | | | |
| 5 | IO_L06P_5/VRN_5 | AC7 | | | |
| 5 | IO_L05_5/No_Pair | AB7 | | | |
| 5 | IO_L03N_5/D4 | AA7 | | | |
| 5 | IO_L03P_5/D5 | Y7 | | | |
| 5 | IO_L02N_5/D6 | AC6 | | | |
| 5 | IO_L02P_5/D7 | AB6 | | | |
| 5 | IO_L01N_5/RDWR_B | AC5 | | | |
| 5 | IO_L01P_5/CS_B | AB5 | | | |
| | | | | | |
| 6 | IO_L01P_6/VRN_6 | AE1 | | | |
| 6 | IO_L01N_6/VRP_6 | AD1 | | | |
| 6 | IO_L02P_6 | AD2 | | | |
| 6 | IO_L02N_6 | AC3 | | | |
| 6 | IO_L03P_6 | AC2 | | | |
| 6 | IO_L03N_6/VREF_6 | AC1 | | | |
| 6 | IO_L05P_6 | AB4 | | | |
| 6 | IO_L05N_6 | AA5 | | | |
| 6 | IO_L06P_6 | AB2 | | | |
| 6 | IO_L06N_6 | AB1 | | | |
| 6 | IO_L23P_6 | AA6 | NC | | |

*Table 7:* **FG676/FGG676 — XC2VP20, XC2VP30, and XC2VP40**

| Bank | Pin Description | Pin Number | No Connects | | |
|---|---|---|---|---|---|
| | | | XC2VP20 | XC2VP30 | XC2VP40 |
| 6 | IO_L23N_6 | Y6 | NC | | |
| 6 | IO_L24P_6 | AA4 | NC | | |
| 6 | IO_L24N_6 | AA3 | NC | | |
| 6 | IO_L31P_6 | AA2 | | | |
| 6 | IO_L31N_6 | AA1 | | | |
| 6 | IO_L33P_6 | Y5 | | | |
| 6 | IO_L33N_6/VREF_6 | W5 | | | |
| 6 | IO_L35P_6 | Y4 | | | |
| 6 | IO_L35N_6 | Y3 | | | |
| 6 | IO_L36P_6 | Y2 | | | |
| 6 | IO_L36N_6 | Y1 | | | |
| 6 | IO_L37P_6 | W7 | | | |
| 6 | IO_L37N_6 | W6 | | | |
| 6 | IO_L39P_6 | W2 | | | |
| 6 | IO_L39N_6/VREF_6 | W1 | | | |
| 6 | IO_L41P_6 | V8 | | | |
| 6 | IO_L41N_6 | V7 | | | |
| 6 | IO_L42P_6 | V6 | | | |
| 6 | IO_L42N_6 | V5 | | | |
| 6 | IO_L43P_6 | V4 | | | |
| 6 | IO_L43N_6 | V3 | | | |
| 6 | IO_L45P_6 | V2 | | | |
| 6 | IO_L45N_6/VREF_6 | V1 | | | |
| 6 | IO_L47P_6 | U8 | | | |
| 6 | IO_L47N_6 | T8 | | | |
| 6 | IO_L48P_6 | U5 | | | |
| 6 | IO_L48N_6 | U4 | | | |
| 6 | IO_L49P_6 | U3 | | | |
| 6 | IO_L49N_6 | T3 | | | |
| 6 | IO_L51P_6 | U2 | | | |
| 6 | IO_L51N_6/VREF_6 | U1 | | | |
| 6 | IO_L53P_6 | T7 | | | |
| 6 | IO_L53N_6 | R7 | | | |
| 6 | IO_L54P_6 | T6 | | | |
| 6 | IO_L54N_6 | T5 | | | |

*Table 7:* **FG676/FGG676 — XC2VP20, XC2VP30, and XC2VP40**

| Bank | Pin Description | Pin Number | No Connects | | |
|---|---|---|---|---|---|
| | | | XC2VP20 | XC2VP30 | XC2VP40 |
| 6 | IO_L55P_6 | T2 | | | |
| 6 | IO_L55N_6 | T1 | | | |
| 6 | IO_L57P_6 | R9 | | | |
| 6 | IO_L57N_6/VREF_6 | R8 | | | |
| 6 | IO_L59P_6 | R6 | | | |
| 6 | IO_L59N_6 | P6 | | | |
| 6 | IO_L60P_6 | R5 | | | |
| 6 | IO_L60N_6 | R4 | | | |
| 6 | IO_L85P_6 | R2 | | | |
| 6 | IO_L85N_6 | R1 | | | |
| 6 | IO_L87P_6 | P9 | | | |
| 6 | IO_L87N_6/VREF_6 | P8 | | | |
| 6 | IO_L89P_6 | P5 | | | |
| 6 | IO_L89N_6 | P4 | | | |
| 6 | IO_L90P_6 | P3 | | | |
| 6 | IO_L90N_6 | P2 | | | |
| | | | | | |
| 7 | IO_L90P_7 | N2 | | | |
| 7 | IO_L90N_7 | N3 | | | |
| 7 | IO_L88P_7 | N4 | | | |
| 7 | IO_L88N_7/VREF_7 | N5 | | | |
| 7 | IO_L86P_7 | N8 | | | |
| 7 | IO_L86N_7 | N9 | | | |
| 7 | IO_L85P_7 | M1 | | | |
| 7 | IO_L85N_7 | M2 | | | |
| 7 | IO_L60P_7 | M4 | | | |
| 7 | IO_L60N_7 | M5 | | | |
| 7 | IO_L58P_7 | N6 | | | |
| 7 | IO_L58N_7/VREF_7 | M6 | | | |
| 7 | IO_L56P_7 | M8 | | | |
| 7 | IO_L56N_7 | M9 | | | |
| 7 | IO_L55P_7 | L1 | | | |
| 7 | IO_L55N_7 | L2 | | | |
| 7 | IO_L54P_7 | L5 | | | |
| 7 | IO_L54N_7 | L6 | | | |

*Table 7:* **FG676/FGG676 — XC2VP20, XC2VP30, and XC2VP40**

| Bank | Pin Description | Pin Number | No Connects | | |
|---|---|---|---|---|---|
| | | | XC2VP20 | XC2VP30 | XC2VP40 |
| 7 | IO_L52P_7 | M7 | | | |
| 7 | IO_L52N_7/VREF_7 | L7 | | | |
| 7 | IO_L50P_7 | K1 | | | |
| 7 | IO_L50N_7 | K2 | | | |
| 7 | IO_L49P_7 | L3 | | | |
| 7 | IO_L49N_7 | K3 | | | |
| 7 | IO_L48P_7 | K4 | | | |
| 7 | IO_L48N_7 | K5 | | | |
| 7 | IO_L46P_7 | L8 | | | |
| 7 | IO_L46N_7/VREF_7 | K8 | | | |
| 7 | IO_L44P_7 | J1 | | | |
| 7 | IO_L44N_7 | J2 | | | |
| 7 | IO_L43P_7 | J3 | | | |
| 7 | IO_L43N_7 | J4 | | | |
| 7 | IO_L42P_7 | J5 | | | |
| 7 | IO_L42N_7 | J6 | | | |
| 7 | IO_L40P_7 | J7 | | | |
| 7 | IO_L40N_7/VREF_7 | J8 | | | |
| 7 | IO_L38P_7 | H1 | | | |
| 7 | IO_L38N_7 | H2 | | | |
| 7 | IO_L37P_7 | H6 | | | |
| 7 | IO_L37N_7 | H7 | | | |
| 7 | IO_L36P_7 | G1 | | | |
| 7 | IO_L36N_7 | G2 | | | |
| 7 | IO_L34P_7 | G3 | | | |
| 7 | IO_L34N_7/VREF_7 | G4 | | | |
| 7 | IO_L32P_7 | H5 | | | |
| 7 | IO_L32N_7 | G5 | | | |
| 7 | IO_L31P_7 | F1 | | | |
| 7 | IO_L31N_7 | F2 | | | |
| 7 | IO_L24P_7 | F3 | NC | | |
| 7 | IO_L24N_7 | F4 | NC | | |
| 7 | IO_L06P_7 | G6 | | | |
| 7 | IO_L06N_7 | F6 | | | |
| 7 | IO_L04P_7 | E1 | | | |

*Table 7:* **FG676/FGG676 — XC2VP20, XC2VP30, and XC2VP40**

| Bank | Pin Description | Pin Number | No Connects | | |
|---|---|---|---|---|---|
| | | | XC2VP20 | XC2VP30 | XC2VP40 |
| 7 | IO_L04N_7/VREF_7 | E2 | | | |
| 7 | IO_L03P_7 | F5 | | | |
| 7 | IO_L03N_7 | E4 | | | |
| 7 | IO_L02P_7 | D1 | | | |
| 7 | IO_L02N_7 | D2 | | | |
| 7 | IO_L01P_7/VRN_7 | C1 | | | |
| 7 | IO_L01N_7/VRP_7 | C2 | | | |
| | | | | | |
| 0 | VCCO_0 | C5 | | | |
| 0 | VCCO_0 | C8 | | | |
| 0 | VCCO_0 | D11 | | | |
| 0 | VCCO_0 | J10 | | | |
| 0 | VCCO_0 | J11 | | | |
| 0 | VCCO_0 | K12 | | | |
| 0 | VCCO_0 | K13 | | | |
| 1 | VCCO_1 | C19 | | | |
| 1 | VCCO_1 | C22 | | | |
| 1 | VCCO_1 | D16 | | | |
| 1 | VCCO_1 | J16 | | | |
| 1 | VCCO_1 | J17 | | | |
| 1 | VCCO_1 | K14 | | | |
| 1 | VCCO_1 | K15 | | | |
| 2 | VCCO_2 | E24 | | | |
| 2 | VCCO_2 | H24 | | | |
| 2 | VCCO_2 | K18 | | | |
| 2 | VCCO_2 | L18 | | | |
| 2 | VCCO_2 | L23 | | | |
| 2 | VCCO_2 | M17 | | | |
| 2 | VCCO_2 | N17 | | | |
| 3 | VCCO_3 | P17 | | | |
| 3 | VCCO_3 | R17 | | | |
| 3 | VCCO_3 | T18 | | | |
| 3 | VCCO_3 | T23 | | | |
| 3 | VCCO_3 | U18 | | | |
| 3 | VCCO_3 | W24 | | | |

*Table 7:* **FG676/FGG676 — XC2VP20, XC2VP30, and XC2VP40**

| Bank | Pin Description | Pin Number | No Connects | | |
|---|---|---|---|---|---|
| | | | XC2VP20 | XC2VP30 | XC2VP40 |
| 3 | VCCO_3 | AB24 | | | |
| 4 | VCCO_4 | U14 | | | |
| 4 | VCCO_4 | U15 | | | |
| 4 | VCCO_4 | V16 | | | |
| 4 | VCCO_4 | V17 | | | |
| 4 | VCCO_4 | AC16 | | | |
| 4 | VCCO_4 | AD19 | | | |
| 4 | VCCO_4 | AD22 | | | |
| 5 | VCCO_5 | U12 | | | |
| 5 | VCCO_5 | U13 | | | |
| 5 | VCCO_5 | V10 | | | |
| 5 | VCCO_5 | V11 | | | |
| 5 | VCCO_5 | AC11 | | | |
| 5 | VCCO_5 | AD5 | | | |
| 5 | VCCO_5 | AD8 | | | |
| 6 | VCCO_6 | P10 | | | |
| 6 | VCCO_6 | R10 | | | |
| 6 | VCCO_6 | T4 | | | |
| 6 | VCCO_6 | T9 | | | |
| 6 | VCCO_6 | U9 | | | |
| 6 | VCCO_6 | W3 | | | |
| 6 | VCCO_6 | AB3 | | | |
| 7 | VCCO_7 | E3 | | | |
| 7 | VCCO_7 | H3 | | | |
| 7 | VCCO_7 | K9 | | | |
| 7 | VCCO_7 | L4 | | | |
| 7 | VCCO_7 | L9 | | | |
| 7 | VCCO_7 | M10 | | | |
| 7 | VCCO_7 | N10 | | | |
| | | | | | |
| N/A | PROG_B | B1 | | | |
| N/A | HSWAP_EN | B3 | | | |
| N/A | DXP | A3 | | | |
| N/A | DXN | C4 | | | |
| N/A | AVCCAUXTX4 | B5 | | | |

*Table 7:* **FG676/FGG676 — XC2VP20, XC2VP30, and XC2VP40**

| Bank | Pin Description | Pin Number | No Connects | | |
|---|---|---|---|---|---|
| | | | XC2VP20 | XC2VP30 | XC2VP40 |
| N/A | VTTXPAD4 | B4 | | | |
| N/A | TXNPAD4 | A4 | | | |
| N/A | TXPPAD4 | A5 | | | |
| N/A | GNDA4 | C6 | | | |
| N/A | RXPPAD4 | A6 | | | |
| N/A | RXNPAD4 | A7 | | | |
| N/A | VTRXPAD4 | B6 | | | |
| N/A | AVCCAUXRX4 | B7 | | | |
| N/A | AVCCAUXTX6 | B10 | | | |
| N/A | VTTXPAD6 | B9 | | | |
| N/A | TXNPAD6 | A9 | | | |
| N/A | TXPPAD6 | A10 | | | |
| N/A | GNDA6 | C11 | | | |
| N/A | RXPPAD6 | A11 | | | |
| N/A | RXNPAD6 | A12 | | | |
| N/A | VTRXPAD6 | B11 | | | |
| N/A | AVCCAUXRX6 | B12 | | | |
| N/A | AVCCAUXTX7 | B16 | | | |
| N/A | VTTXPAD7 | B15 | | | |
| N/A | TXNPAD7 | A15 | | | |
| N/A | TXPPAD7 | A16 | | | |
| N/A | GNDA7 | C16 | | | |
| N/A | RXPPAD7 | A17 | | | |
| N/A | RXNPAD7 | A18 | | | |
| N/A | VTRXPAD7 | B17 | | | |
| N/A | AVCCAUXRX7 | B18 | | | |
| N/A | AVCCAUXTX9 | B21 | | | |
| N/A | VTTXPAD9 | B20 | | | |
| N/A | TXNPAD9 | A20 | | | |
| N/A | TXPPAD9 | A21 | | | |
| N/A | GNDA9 | C21 | | | |
| N/A | RXPPAD9 | A22 | | | |
| N/A | RXNPAD9 | A23 | | | |
| N/A | VTRXPAD9 | B22 | | | |
| N/A | AVCCAUXRX9 | B23 | | | |

*Table 7:* **FG676/FGG676 — XC2VP20, XC2VP30, and XC2VP40**

| Bank | Pin Description | Pin Number | No Connects | | |
|---|---|---|---|---|---|
| | | | XC2VP20 | XC2VP30 | XC2VP40 |
| N/A | RSVD | C23 | | | |
| N/A | VBATT | A24 | | | |
| N/A | TMS | B24 | | | |
| N/A | TCK | B26 | | | |
| N/A | TDO | D24 | | | |
| N/A | CCLK | AE24 | | | |
| N/A | PWRDWN_B | AF24 | | | |
| N/A | DONE | AD23 | | | |
| N/A | AVCCAUXRX16 | AE23 | | | |
| N/A | VTRXPAD16 | AE22 | | | |
| N/A | RXNPAD16 | AF23 | | | |
| N/A | RXPPAD16 | AF22 | | | |
| N/A | GNDA16 | AD21 | | | |
| N/A | TXPPAD16 | AF21 | | | |
| N/A | TXNPAD16 | AF20 | | | |
| N/A | VTTXPAD16 | AE20 | | | |
| N/A | AVCCAUXTX16 | AE21 | | | |
| N/A | AVCCAUXRX18 | AE18 | | | |
| N/A | VTRXPAD18 | AE17 | | | |
| N/A | RXNPAD18 | AF18 | | | |
| N/A | RXPPAD18 | AF17 | | | |
| N/A | GNDA18 | AD16 | | | |
| N/A | TXPPAD18 | AF16 | | | |
| N/A | TXNPAD18 | AF15 | | | |
| N/A | VTTXPAD18 | AE15 | | | |
| N/A | AVCCAUXTX18 | AE16 | | | |
| N/A | AVCCAUXRX19 | AE12 | | | |
| N/A | VTRXPAD19 | AE11 | | | |
| N/A | RXNPAD19 | AF12 | | | |
| N/A | RXPPAD19 | AF11 | | | |
| N/A | GNDA19 | AD11 | | | |
| N/A | TXPPAD19 | AF10 | | | |
| N/A | TXNPAD19 | AF9 | | | |
| N/A | VTTXPAD19 | AE9 | | | |
| N/A | AVCCAUXTX19 | AE10 | | | |

*Table 7:* **FG676/FGG676 — XC2VP20, XC2VP30, and XC2VP40**

| Bank | Pin Description | Pin Number | No Connects | | |
|---|---|---|---|---|---|
| | | | XC2VP20 | XC2VP30 | XC2VP40 |
| N/A | AVCCAUXRX21 | AE7 | | | |
| N/A | VTRXPAD21 | AE6 | | | |
| N/A | RXNPAD21 | AF7 | | | |
| N/A | RXPPAD21 | AF6 | | | |
| N/A | GNDA21 | AD6 | | | |
| N/A | TXPPAD21 | AF5 | | | |
| N/A | TXNPAD21 | AF4 | | | |
| N/A | VTTXPAD21 | AE4 | | | |
| N/A | AVCCAUXTX21 | AE5 | | | |
| N/A | M2 | AD4 | | | |
| N/A | M0 | AF3 | | | |
| N/A | M1 | AE3 | | | |
| N/A | TDI | D3 | | | |
| | | | | | |
| N/A | VCCINT | G10 | | | |
| N/A | VCCINT | G13 | | | |
| N/A | VCCINT | G14 | | | |
| N/A | VCCINT | G17 | | | |
| N/A | VCCINT | J9 | | | |
| N/A | VCCINT | J18 | | | |
| N/A | VCCINT | K7 | | | |
| N/A | VCCINT | K10 | | | |
| N/A | VCCINT | K11 | | | |
| N/A | VCCINT | K16 | | | |
| N/A | VCCINT | K17 | | | |
| N/A | VCCINT | K20 | | | |
| N/A | VCCINT | L10 | | | |
| N/A | VCCINT | L17 | | | |
| N/A | VCCINT | N7 | | | |
| N/A | VCCINT | N20 | | | |
| N/A | VCCINT | P7 | | | |
| N/A | VCCINT | P20 | | | |
| N/A | VCCINT | T10 | | | |
| N/A | VCCINT | T17 | | | |
| N/A | VCCINT | U7 | | | |

*Table 7:* **FG676/FGG676 — XC2VP20, XC2VP30, and XC2VP40**

| Bank | Pin Description | Pin Number | No Connects | | |
|---|---|---|---|---|---|
| | | | XC2VP20 | XC2VP30 | XC2VP40 |
| N/A | VCCINT | U10 | | | |
| N/A | VCCINT | U11 | | | |
| N/A | VCCINT | U16 | | | |
| N/A | VCCINT | U17 | | | |
| N/A | VCCINT | U20 | | | |
| N/A | VCCINT | V9 | | | |
| N/A | VCCINT | V18 | | | |
| N/A | VCCINT | Y10 | | | |
| N/A | VCCINT | Y13 | | | |
| N/A | VCCINT | Y14 | | | |
| N/A | VCCINT | Y17 | | | |
| N/A | VCCAUX | A2 | | | |
| N/A | VCCAUX | A13 | | | |
| N/A | VCCAUX | A14 | | | |
| N/A | VCCAUX | A25 | | | |
| N/A | VCCAUX | N1 | | | |
| N/A | VCCAUX | N26 | | | |
| N/A | VCCAUX | P1 | | | |
| N/A | VCCAUX | P26 | | | |
| N/A | VCCAUX | AF2 | | | |
| N/A | VCCAUX | AF13 | | | |
| N/A | VCCAUX | AF14 | | | |
| N/A | VCCAUX | AF25 | | | |
| N/A | GND | A1 | | | |
| N/A | GND | A26 | | | |
| N/A | GND | B2 | | | |
| N/A | GND | B25 | | | |
| N/A | GND | C3 | | | |
| N/A | GND | C24 | | | |
| N/A | GND | D4 | | | |
| N/A | GND | D8 | | | |
| N/A | GND | D19 | | | |
| N/A | GND | D23 | | | |
| N/A | GND | F10 | | | |
| N/A | GND | F17 | | | |

*Table 7:* **FG676/FGG676 — XC2VP20, XC2VP30, and XC2VP40**

| Bank | Pin Description | Pin Number | No Connects | | |
|---|---|---|---|---|---|
| | | | XC2VP20 | XC2VP30 | XC2VP40 |
| N/A | GND | H4 | | | |
| N/A | GND | H23 | | | |
| N/A | GND | K6 | | | |
| N/A | GND | K21 | | | |
| N/A | GND | L11 | | | |
| N/A | GND | L12 | | | |
| N/A | GND | L13 | | | |
| N/A | GND | L14 | | | |
| N/A | GND | L15 | | | |
| N/A | GND | L16 | | | |
| N/A | GND | M3 | | | |
| N/A | GND | M11 | | | |
| N/A | GND | M12 | | | |
| N/A | GND | M13 | | | |
| N/A | GND | M14 | | | |
| N/A | GND | M15 | | | |
| N/A | GND | M16 | | | |
| N/A | GND | M24 | | | |
| N/A | GND | N11 | | | |
| N/A | GND | N12 | | | |
| N/A | GND | N13 | | | |
| N/A | GND | N14 | | | |
| N/A | GND | N15 | | | |
| N/A | GND | N16 | | | |
| N/A | GND | P11 | | | |
| N/A | GND | P12 | | | |
| N/A | GND | P13 | | | |
| N/A | GND | P14 | | | |
| N/A | GND | P15 | | | |
| N/A | GND | P16 | | | |
| N/A | GND | R3 | | | |
| N/A | GND | R11 | | | |
| N/A | GND | R12 | | | |
| N/A | GND | R13 | | | |
| N/A | GND | R14 | | | |

*Table 7:* **FG676/FGG676 — XC2VP20, XC2VP30, and XC2VP40**

| Bank | Pin Description | Pin Number | No Connects | | |
|---|---|---|---|---|---|
| | | | XC2VP20 | XC2VP30 | XC2VP40 |
| N/A | GND | R15 | | | |
| N/A | GND | R16 | | | |
| N/A | GND | R24 | | | |
| N/A | GND | T11 | | | |
| N/A | GND | T12 | | | |
| N/A | GND | T13 | | | |
| N/A | GND | T14 | | | |
| N/A | GND | T15 | | | |
| N/A | GND | T16 | | | |
| N/A | GND | U6 | | | |
| N/A | GND | U21 | | | |
| N/A | GND | W4 | | | |
| N/A | GND | W23 | | | |
| N/A | GND | AA10 | | | |
| N/A | GND | AA17 | | | |
| N/A | GND | AC4 | | | |
| N/A | GND | AC8 | | | |
| N/A | GND | AC19 | | | |
| N/A | GND | AC23 | | | |
| N/A | GND | AD3 | | | |
| N/A | GND | AD24 | | | |
| N/A | GND | AE2 | | | |
| N/A | GND | AE25 | | | |
| N/A | GND | AF1 | | | |
| N/A | GND | AF26 | | | |

**Notes:**
1. See Table 4 for an explanation of the signals available on this pin.

## FG676/FGG676 Fine-Pitch BGA Package Specifications (1.00mm pitch)

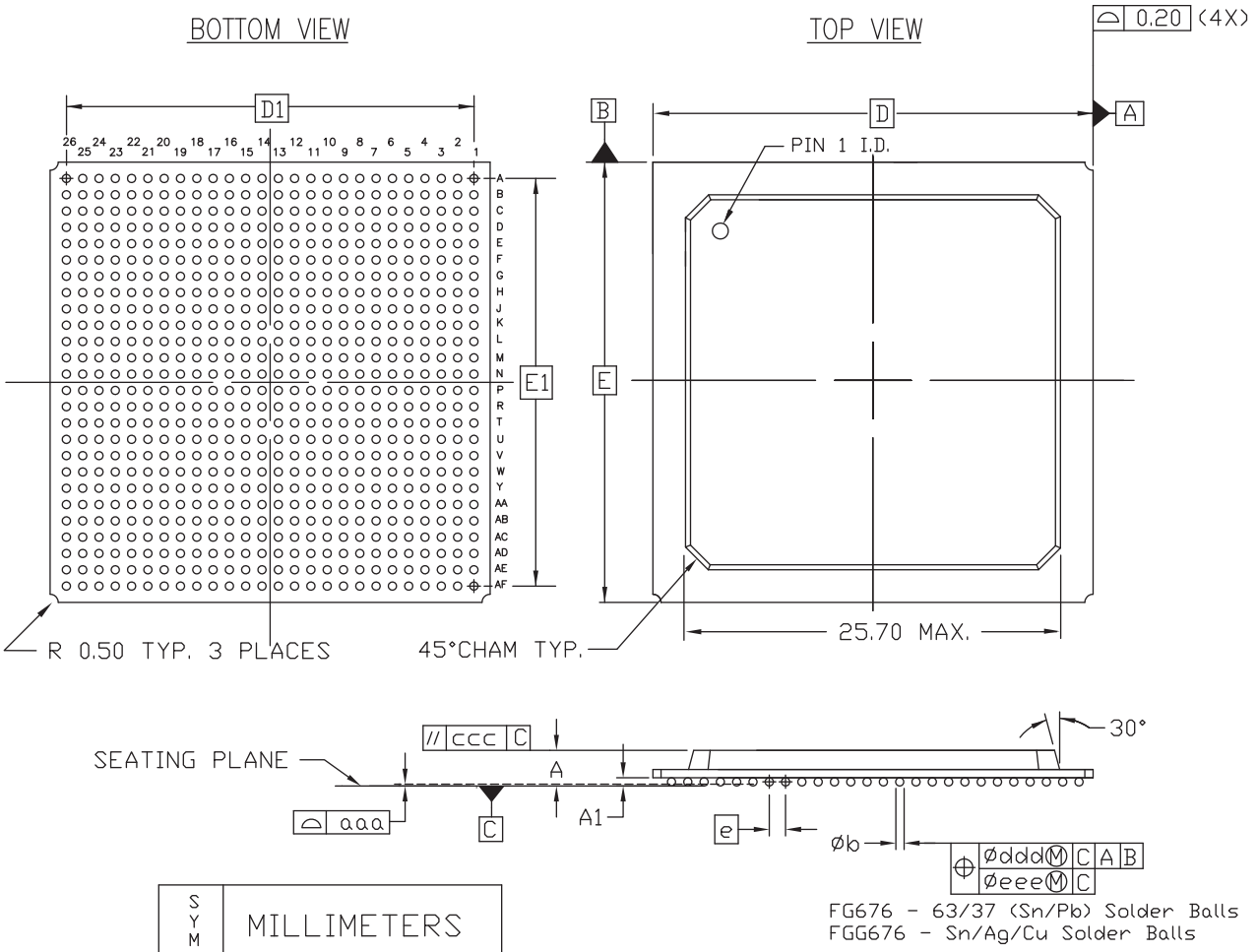


| SYMBOL | MILLIMETERS | | |
|---|---|---|---|
| | MIN. | NOM. | MAX. |
| A | 2.02 | 2.23 | 2.44 |
| $A_1$ | 0.40 | 0.50 | 0.60 |
| D/E | 27.00 BSC | | |
| $D_1/E_1$ | 25.00 REF | | |
| e | 1.00 BSC | | |
| Øb | 0.50 | 0.60 | 0.70 |
| aaa | — | — | 0.20 |
| ccc | — | — | 0.35 |
| ddd | — | — | 0.30 |
| eee | — | — | 0.10 |
| M | 26 | | |

NOTES:

1. ALL DIMENSIONS AND TOLERANCES CONFORM TO ANSI Y14.5M-1994
2. SYMBOL 'M' IS THE BALL MATRIX SIZE.
3. CONFORMS TO JEDEC MS-034-AAL-1

ds083_4_03_053111

*Figure 3:* **FG676/FGG676 Fine-Pitch BGA Package Specifications**

## FF672 Flip-Chip Fine-Pitch BGA Package

As shown in Table 8, XC2VP2, XC2VP4, and XC2VP7 Virtex-II Pro devices are available in the FF672 flip-chip fine-pitch BGA package. Pins in each of these devices are the same, except for differences shown in the "No Connects" column. Following this table are the FF672 Flip-Chip Fine-Pitch BGA Package Specifications (1.00mm pitch).

*Table 8:* **FF672 — XC2VP2, XC2VP4, and XC2VP7**

| Bank | Pin Description | Pin Number | No Connects | | |
|---|---|---|---|---|---|
| | | | XC2VP2 | XC2VP4 | XC2VP7 |
| 0 | IO_L01N_0/VRP_0 | B24 | | | |
| 0 | IO_L01P_0/VRN_0 | A24 | | | |
| 0 | IO_L02N_0 | D21 | | | |
| 0 | IO_L02P_0 | C21 | | | |
| 0 | IO_L03N_0 | E20 | | | |
| 0 | IO_L03P_0/VREF_0 | D20 | | | |
| 0 | IO_L05_0/No_Pair | F19 | | | |
| 0 | IO_L06N_0 | E19 | | | |
| 0 | IO_L06P_0 | E18 | | | |
| 0 | IO_L07N_0 | D19 | | | |
| 0 | IO_L07P_0 | C19 | | | |
| 0 | IO_L08N_0 | B19 | | | |
| 0 | IO_L08P_0 | A19 | | | |
| 0 | IO_L09N_0 | G18 | | | |
| 0 | IO_L09P_0/VREF_0 | F18 | | | |
| 0 | IO_L37N_0 | D18 | NC | NC | |
| 0 | IO_L37P_0 | C18 | NC | NC | |
| 0 | IO_L38N_0 | G17 | NC | NC | |
| 0 | IO_L38P_0 | H16 | NC | NC | |
| 0 | IO_L39N_0 | F17 | NC | NC | |
| 0 | IO_L39P_0 | F16 | NC | NC | |
| 0 | IO_L43N_0 | E17 | NC | NC | |
| 0 | IO_L43P_0 | D17 | NC | NC | |
| 0 | IO_L44N_0 | G16 | NC | NC | |
| 0 | IO_L44P_0 | G15 | NC | NC | |
| 0 | IO_L45N_0 | E16 | NC | NC | |
| 0 | IO_L45P_0/VREF_0 | D16 | NC | NC | |
| 0 | IO_L67N_0 | F15 | | | |
| 0 | IO_L67P_0 | E15 | | | |
| 0 | IO_L68N_0 | D15 | | | |
| 0 | IO_L68P_0 | C15 | | | |
| 0 | IO_L69N_0 | H15 | | | |
| 0 | IO_L69P_0/VREF_0 | H14 | | | |

*Table 8:* **FF672 — XC2VP2, XC2VP4, and XC2VP7**

| Bank | Pin Description | Pin Number | No Connects | | |
|---|---|---|---|---|---|
| | | | XC2VP2 | XC2VP4 | XC2VP7 |
| 0 | IO_L73N_0 | G14 | | | |
| 0 | IO_L73P_0 | F14 | | | |
| 0 | IO_L74N_0/GCLK7P | E14 | | | |
| 0 | IO_L74P_0/GCLK6S | D14 | | | |
| 0 | IO_L75N_0/GCLK5P | C14 | | | |
| 0 | IO_L75P_0/GCLK4S | B14 | | | |
| | | | | | |
| 1 | IO_L75N_1/GCLK3P | B13 | | | |
| 1 | IO_L75P_1/GCLK2S | C13 | | | |
| 1 | IO_L74N_1/GCLK1P | D13 | | | |
| 1 | IO_L74P_1/GCLK0S | E13 | | | |
| 1 | IO_L73N_1 | F13 | | | |
| 1 | IO_L73P_1 | G13 | | | |
| 1 | IO_L69N_1/VREF_1 | H13 | | | |
| 1 | IO_L69P_1 | H12 | | | |
| 1 | IO_L68N_1 | C12 | | | |
| 1 | IO_L68P_1 | D12 | | | |
| 1 | IO_L67N_1 | E12 | | | |
| 1 | IO_L67P_1 | F12 | | | |
| 1 | IO_L45N_1/VREF_1 | D11 | NC | NC | |
| 1 | IO_L45P_1 | E11 | NC | NC | |
| 1 | IO_L44N_1 | G12 | NC | NC | |
| 1 | IO_L44P_1 | G11 | NC | NC | |
| 1 | IO_L43N_1 | D10 | NC | NC | |
| 1 | IO_L43P_1 | E10 | NC | NC | |
| 1 | IO_L39N_1 | F11 | NC | NC | |
| 1 | IO_L39P_1 | F10 | NC | NC | |
| 1 | IO_L38N_1 | H11 | NC | NC | |
| 1 | IO_L38P_1 | G10 | NC | NC | |
| 1 | IO_L37N_1 | C9 | NC | NC | |
| 1 | IO_L37P_1 | D9 | NC | NC | |
| 1 | IO_L09N_1/VREF_1 | F9 | | | |
| 1 | IO_L09P_1 | G9 | | | |
| 1 | IO_L08N_1 | A8 | | | |
| 1 | IO_L08P_1 | B8 | | | |
| 1 | IO_L07N_1 | C8 | | | |
| 1 | IO_L07P_1 | D8 | | | |

*Table 8:* **FF672 — XC2VP2, XC2VP4, and XC2VP7**

| Bank | Pin Description | Pin Number | No Connects | | |
|---|---|---|---|---|---|
| | | | XC2VP2 | XC2VP4 | XC2VP7 |
| 1 | IO_L06N_1 | E9 | | | |
| 1 | IO_L06P_1 | E8 | | | |
| 1 | IO_L05_1/No_Pair | F8 | | | |
| 1 | IO_L03N_1/VREF_1 | D7 | | | |
| 1 | IO_L03P_1 | E7 | | | |
| 1 | IO_L02N_1 | C6 | | | |
| 1 | IO_L02P_1 | D6 | | | |
| 1 | IO_L01N_1/VRP_1 | A3 | | | |
| 1 | IO_L01P_1/VRN_1 | B3 | | | |
| | | | | | |
| 2 | IO_L01N_2/VRP_2 | C4 | | | |
| 2 | IO_L01P_2/VRN_2 | D3 | | | |
| 2 | IO_L02N_2 | A2 | | | |
| 2 | IO_L02P_2 | B1 | | | |
| 2 | IO_L03N_2 | C2 | | | |
| 2 | IO_L03P_2 | C1 | | | |
| 2 | IO_L04N_2/VREF_2 | D2 | | | |
| 2 | IO_L04P_2 | D1 | | | |
| 2 | IO_L05N_2 | E4 | | | |
| 2 | IO_L05P_2 | E3 | | | |
| 2 | IO_L06N_2 | E2 | | | |
| 2 | IO_L06P_2 | E1 | | | |
| 2 | IO_L40N_2/VREF_2 | F5 | NC | NC | NC |
| 2 | IO_L40P_2 | F4 | NC | NC | NC |
| 2 | IO_L42N_2 | F3 | NC | NC | NC |
| 2 | IO_L42P_2 | F2 | NC | NC | NC |
| 2 | IO_L43N_2 | G6 | NC | | |
| 2 | IO_L43P_2 | G5 | NC | | |
| 2 | IO_L44N_2 | G4 | NC | | |
| 2 | IO_L44P_2 | G3 | NC | | |
| 2 | IO_L45N_2 | F1 | NC | | |
| 2 | IO_L45P_2 | G1 | NC | | |
| 2 | IO_L46N_2/VREF_2 | H6 | NC | | |
| 2 | IO_L46P_2 | H5 | NC | | |
| 2 | IO_L47N_2 | H4 | NC | | |
| 2 | IO_L47P_2 | H3 | NC | | |
| 2 | IO_L48N_2 | H2 | NC | | |

*Table 8:* **FF672 — XC2VP2, XC2VP4, and XC2VP7**

| Bank | Pin Description | Pin Number | No Connects | | |
|---|---|---|---|---|---|
| | | | XC2VP2 | XC2VP4 | XC2VP7 |
| 2 | IO_L48P_2 | H1 | NC | | |
| 2 | IO_L49N_2 | J7 | NC | | |
| 2 | IO_L49P_2 | J6 | NC | | |
| 2 | IO_L50N_2 | J5 | NC | | |
| 2 | IO_L50P_2 | J4 | NC | | |
| 2 | IO_L51N_2 | J3 | NC | | |
| 2 | IO_L51P_2 | J2 | NC | | |
| 2 | IO_L52N_2/VREF_2 | K6 | NC | | |
| 2 | IO_L52P_2 | K5 | NC | | |
| 2 | IO_L53N_2 | K4 | NC | | |
| 2 | IO_L53P_2 | K3 | NC | | |
| 2 | IO_L54N_2 | J1 | NC | | |
| 2 | IO_L54P_2 | K1 | NC | | |
| 2 | IO_L55N_2 | K7 | NC | | |
| 2 | IO_L55P_2 | L8 | NC | | |
| 2 | IO_L56N_2 | L7 | NC | | |
| 2 | IO_L56P_2 | M7 | NC | | |
| 2 | IO_L57N_2 | L6 | NC | | |
| 2 | IO_L57P_2 | L5 | NC | | |
| 2 | IO_L58N_2/VREF_2 | L4 | NC | | |
| 2 | IO_L58P_2 | L3 | NC | | |
| 2 | IO_L59N_2 | L2 | NC | | |
| 2 | IO_L59P_2 | L1 | NC | | |
| 2 | IO_L60N_2 | M8 | NC | | |
| 2 | IO_L60P_2 | N8 | NC | | |
| 2 | IO_L85N_2 | M6 | | | |
| 2 | IO_L85P_2 | M5 | | | |
| 2 | IO_L86N_2 | M4 | | | |
| 2 | IO_L86P_2 | M3 | | | |
| 2 | IO_L87N_2 | M2 | | | |
| 2 | IO_L87P_2 | M1 | | | |
| 2 | IO_L88N_2/VREF_2 | N7 | | | |
| 2 | IO_L88P_2 | N6 | | | |
| 2 | IO_L89N_2 | N5 | | | |
| 2 | IO_L89P_2 | N4 | | | |
| 2 | IO_L90N_2 | N3 | | | |
| 2 | IO_L90P_2 | N2 | | | |

*Table 8:* **FF672 — XC2VP2, XC2VP4, and XC2VP7**

| Bank | Pin Description | Pin Number | No Connects | | |
|---|---|---|---|---|---|
| | | | XC2VP2 | XC2VP4 | XC2VP7 |
| | | | | | |
| 3 | IO_L90N_3 | P2 | | | |
| 3 | IO_L90P_3 | P3 | | | |
| 3 | IO_L89N_3 | P4 | | | |
| 3 | IO_L89P_3 | P5 | | | |
| 3 | IO_L88N_3 | P6 | | | |
| 3 | IO_L88P_3 | P7 | | | |
| 3 | IO_L87N_3/VREF_3 | R1 | | | |
| 3 | IO_L87P_3 | R2 | | | |
| 3 | IO_L86N_3 | R3 | | | |
| 3 | IO_L86P_3 | R4 | | | |
| 3 | IO_L85N_3 | R5 | | | |
| 3 | IO_L85P_3 | R6 | | | |
| 3 | IO_L60N_3 | P8 | NC | | |
| 3 | IO_L60P_3 | R8 | NC | | |
| 3 | IO_L59N_3 | T1 | NC | | |
| 3 | IO_L59P_3 | T2 | NC | | |
| 3 | IO_L58N_3 | T3 | NC | | |
| 3 | IO_L58P_3 | T4 | NC | | |
| 3 | IO_L57N_3/VREF_3 | T5 | NC | | |
| 3 | IO_L57P_3 | T6 | NC | | |
| 3 | IO_L56N_3 | R7 | NC | | |
| 3 | IO_L56P_3 | T7 | NC | | |
| 3 | IO_L55N_3 | T8 | NC | | |
| 3 | IO_L55P_3 | U7 | NC | | |
| 3 | IO_L54N_3 | U1 | NC | | |
| 3 | IO_L54P_3 | V1 | NC | | |
| 3 | IO_L53N_3 | U3 | NC | | |
| 3 | IO_L53P_3 | U4 | NC | | |
| 3 | IO_L52N_3 | U5 | NC | | |
| 3 | IO_L52P_3 | U6 | NC | | |
| 3 | IO_L51N_3/VREF_3 | V2 | NC | | |
| 3 | IO_L51P_3 | V3 | NC | | |
| 3 | IO_L50N_3 | V4 | NC | | |
| 3 | IO_L50P_3 | V5 | NC | | |
| 3 | IO_L49N_3 | V6 | NC | | |
| 3 | IO_L49P_3 | V7 | NC | | |

*Table 8:* **FF672 — XC2VP2, XC2VP4, and XC2VP7**

| Bank | Pin Description | Pin Number | No Connects | | |
|---|---|---|---|---|---|
| | | | XC2VP2 | XC2VP4 | XC2VP7 |
| 3 | IO_L48N_3 | W1 | NC | | |
| 3 | IO_L48P_3 | W2 | NC | | |
| 3 | IO_L47N_3 | W3 | NC | | |
| 3 | IO_L47P_3 | W4 | NC | | |
| 3 | IO_L46N_3 | W5 | NC | | |
| 3 | IO_L46P_3 | W6 | NC | | |
| 3 | IO_L45N_3/VREF_3 | Y1 | NC | | |
| 3 | IO_L45P_3 | AA1 | NC | | |
| 3 | IO_L44N_3 | Y3 | NC | | |
| 3 | IO_L44P_3 | Y4 | NC | | |
| 3 | IO_L43N_3 | Y5 | NC | | |
| 3 | IO_L43P_3 | Y6 | NC | | |
| 3 | IO_L42N_3 | AA2 | NC | NC | NC |
| 3 | IO_L42P_3 | AA3 | NC | NC | NC |
| 3 | IO_L41N_3 | AA4 | NC | NC | NC |
| 3 | IO_L41P_3 | AA5 | NC | NC | NC |
| 3 | IO_L39N_3/VREF_3 | AB1 | NC | NC | NC |
| 3 | IO_L39P_3 | AB2 | NC | NC | NC |
| 3 | IO_L06N_3 | AB3 | | | |
| 3 | IO_L06P_3 | AB4 | | | |
| 3 | IO_L05N_3 | AC1 | | | |
| 3 | IO_L05P_3 | AC2 | | | |
| 3 | IO_L04N_3 | AD1 | | | |
| 3 | IO_L04P_3 | AD2 | | | |
| 3 | IO_L03N_3/VREF_3 | AE1 | | | |
| 3 | IO_L03P_3 | AF2 | | | |
| 3 | IO_L02N_3 | AC3 | | | |
| 3 | IO_L02P_3 | AD4 | | | |
| 3 | IO_L01N_3/VRP_3 | AE3 | | | |
| 3 | IO_L01P_3/VRN_3 | AF3 | | | |
| | | | | | |
| 4 | IO_L01N_4/BUSY/DOUT(1) | AC6 | | | |
| 4 | IO_L01P_4/INIT_B | AD6 | | | |
| 4 | IO_L02N_4/D0/DIN(1) | AB7 | | | |
| 4 | IO_L02P_4/D1 | AC7 | | | |
| 4 | IO_L03N_4/D2 | AA7 | | | |
| 4 | IO_L03P_4/D3 | AA8 | | | |

*Table 8:* **FF672 — XC2VP2, XC2VP4, and XC2VP7**

| Bank | Pin Description | Pin Number | No Connects | | |
|---|---|---|---|---|---|
| | | | XC2VP2 | XC2VP4 | XC2VP7 |
| 4 | IO_L05_4/No_Pair | Y8 | | | |
| 4 | IO_L06N_4/VRP_4 | AB8 | | | |
| 4 | IO_L06P_4/VRN_4 | AB9 | | | |
| 4 | IO_L07N_4 | AC8 | | | |
| 4 | IO_L07P_4/VREF_4 | AD8 | | | |
| 4 | IO_L08N_4 | AE8 | | | |
| 4 | IO_L08P_4 | AF8 | | | |
| 4 | IO_L09N_4 | Y9 | | | |
| 4 | IO_L09P_4/VREF_4 | AA9 | | | |
| 4 | IO_L37N_4 | AC9 | NC | NC | |
| 4 | IO_L37P_4 | AD9 | NC | NC | |
| 4 | IO_L38N_4 | Y10 | NC | NC | |
| 4 | IO_L38P_4 | W11 | NC | NC | |
| 4 | IO_L39N_4 | AA10 | NC | NC | |
| 4 | IO_L39P_4 | AA11 | NC | NC | |
| 4 | IO_L43N_4 | AB10 | NC | NC | |
| 4 | IO_L43P_4 | AC10 | NC | NC | |
| 4 | IO_L44N_4 | Y11 | NC | NC | |
| 4 | IO_L44P_4 | Y12 | NC | NC | |
| 4 | IO_L45N_4 | AB11 | NC | NC | |
| 4 | IO_L45P_4/VREF_4 | AC11 | NC | NC | |
| 4 | IO_L67N_4 | AA12 | | | |
| 4 | IO_L67P_4 | AB12 | | | |
| 4 | IO_L68N_4 | AC12 | | | |
| 4 | IO_L68P_4 | AD12 | | | |
| 4 | IO_L69N_4 | W12 | | | |
| 4 | IO_L69P_4/VREF_4 | W13 | | | |
| 4 | IO_L73N_4 | Y13 | | | |
| 4 | IO_L73P_4 | AA13 | | | |
| 4 | IO_L74N_4/GCLK3S | AB13 | | | |
| 4 | IO_L74P_4/GCLK2P | AC13 | | | |
| 4 | IO_L75N_4/GCLK1S | AD13 | | | |
| 4 | IO_L75P_4/GCLK0P | AE13 | | | |
| | | | | | |
| 5 | IO_L75N_5/GCLK7S | AE14 | | | |
| 5 | IO_L75P_5/GCLK6P | AD14 | | | |
| 5 | IO_L74N_5/GCLK5S | AC14 | | | |

*Table 8:* **FF672 — XC2VP2, XC2VP4, and XC2VP7**

| Bank | Pin Description | Pin Number | No Connects | | |
|---|---|---|---|---|---|
| | | | XC2VP2 | XC2VP4 | XC2VP7 |
| 5 | IO_L74P_5/GCLK4P | AB14 | | | |
| 5 | IO_L73N_5 | AA14 | | | |
| 5 | IO_L73P_5 | Y14 | | | |
| 5 | IO_L69N_5/VREF_5 | W14 | | | |
| 5 | IO_L69P_5 | W15 | | | |
| 5 | IO_L68N_5 | AD15 | | | |
| 5 | IO_L68P_5 | AC15 | | | |
| 5 | IO_L67N_5 | AB15 | | | |
| 5 | IO_L67P_5 | AA15 | | | |
| 5 | IO_L45N_5/VREF_5 | AC16 | NC | NC | |
| 5 | IO_L45P_5 | AB16 | NC | NC | |
| 5 | IO_L44N_5 | Y15 | NC | NC | |
| 5 | IO_L44P_5 | Y16 | NC | NC | |
| 5 | IO_L43N_5 | AC17 | NC | NC | |
| 5 | IO_L43P_5 | AB17 | NC | NC | |
| 5 | IO_L39N_5 | AA16 | NC | NC | |
| 5 | IO_L39P_5 | AA17 | NC | NC | |
| 5 | IO_L38N_5 | W16 | NC | NC | |
| 5 | IO_L38P_5 | Y17 | NC | NC | |
| 5 | IO_L37N_5 | AD18 | NC | NC | |
| 5 | IO_L37P_5 | AC18 | NC | NC | |
| 5 | IO_L09N_5/VREF_5 | AA18 | | | |
| 5 | IO_L09P_5 | Y18 | | | |
| 5 | IO_L08N_5 | AF19 | | | |
| 5 | IO_L08P_5 | AE19 | | | |
| 5 | IO_L07N_5/VREF_5 | AD19 | | | |
| 5 | IO_L07P_5 | AC19 | | | |
| 5 | IO_L06N_5/VRP_5 | AB18 | | | |
| 5 | IO_L06P_5/VRN_5 | AB19 | | | |
| 5 | IO_L05_5/No_Pair | Y19 | | | |
| 5 | IO_L03N_5/D4 | AA19 | | | |
| 5 | IO_L03P_5/D5 | AA20 | | | |
| 5 | IO_L02N_5/D6 | AC20 | | | |
| 5 | IO_L02P_5/D7 | AB20 | | | |
| 5 | IO_L01N_5/RDWR_B | AD21 | | | |
| 5 | IO_L01P_5/CS_B | AC21 | | | |

*Table 8:* **FF672 — XC2VP2, XC2VP4, and XC2VP7**

| Bank | Pin Description | Pin Number | No Connects | | |
|---|---|---|---|---|---|
| | | | XC2VP2 | XC2VP4 | XC2VP7 |
| 6 | IO_L01P_6/VRN_6 | AF24 | | | |
| 6 | IO_L01N_6/VRP_6 | AE24 | | | |
| 6 | IO_L02P_6 | AD23 | | | |
| 6 | IO_L02N_6 | AC24 | | | |
| 6 | IO_L03P_6 | AE26 | | | |
| 6 | IO_L03N_6/VREF_6 | AF25 | | | |
| 6 | IO_L04P_6 | AD25 | | | |
| 6 | IO_L04N_6 | AD26 | | | |
| 6 | IO_L05P_6 | AC25 | | | |
| 6 | IO_L05N_6 | AC26 | | | |
| 6 | IO_L06P_6 | AB23 | | | |
| 6 | IO_L06N_6 | AB24 | | | |
| 6 | IO_L39P_6 | AB25 | NC | NC | NC |
| 6 | IO_L39N_6/VREF_6 | AB26 | NC | NC | NC |
| 6 | IO_L41P_6 | AA22 | NC | NC | NC |
| 6 | IO_L41N_6 | AA23 | NC | NC | NC |
| 6 | IO_L42P_6 | AA24 | NC | NC | NC |
| 6 | IO_L42N_6 | AA25 | NC | NC | NC |
| 6 | IO_L43P_6 | Y21 | NC | | |
| 6 | IO_L43N_6 | Y22 | NC | | |
| 6 | IO_L44P_6 | Y23 | NC | | |
| 6 | IO_L44N_6 | Y24 | NC | | |
| 6 | IO_L45P_6 | AA26 | NC | | |
| 6 | IO_L45N_6/VREF_6 | Y26 | NC | | |
| 6 | IO_L46P_6 | W21 | NC | | |
| 6 | IO_L46N_6 | W22 | NC | | |
| 6 | IO_L47P_6 | W23 | NC | | |
| 6 | IO_L47N_6 | W24 | NC | | |
| 6 | IO_L48P_6 | W25 | NC | | |
| 6 | IO_L48N_6 | W26 | NC | | |
| 6 | IO_L49P_6 | V20 | NC | | |
| 6 | IO_L49N_6 | V21 | NC | | |
| 6 | IO_L50P_6 | V22 | NC | | |
| 6 | IO_L50N_6 | V23 | NC | | |
| 6 | IO_L51P_6 | V24 | NC | | |
| 6 | IO_L51N_6/VREF_6 | V25 | NC | | |
| 6 | IO_L52P_6 | U21 | NC | | |

*Table 8:* **FF672 — XC2VP2, XC2VP4, and XC2VP7**

| Bank | Pin Description | Pin Number | No Connects | | |
|---|---|---|---|---|---|
| | | | XC2VP2 | XC2VP4 | XC2VP7 |
| 6 | IO_L52N_6 | U22 | NC | | |
| 6 | IO_L53P_6 | U23 | NC | | |
| 6 | IO_L53N_6 | U24 | NC | | |
| 6 | IO_L54P_6 | V26 | NC | | |
| 6 | IO_L54N_6 | U26 | NC | | |
| 6 | IO_L55P_6 | U20 | NC | | |
| 6 | IO_L55N_6 | T19 | NC | | |
| 6 | IO_L56P_6 | T20 | NC | | |
| 6 | IO_L56N_6 | R20 | NC | | |
| 6 | IO_L57P_6 | T21 | NC | | |
| 6 | IO_L57N_6/VREF_6 | T22 | NC | | |
| 6 | IO_L58P_6 | T23 | NC | | |
| 6 | IO_L58N_6 | T24 | NC | | |
| 6 | IO_L59P_6 | T25 | NC | | |
| 6 | IO_L59N_6 | T26 | NC | | |
| 6 | IO_L60P_6 | R19 | NC | | |
| 6 | IO_L60N_6 | P19 | NC | | |
| 6 | IO_L85P_6 | R21 | | | |
| 6 | IO_L85N_6 | R22 | | | |
| 6 | IO_L86P_6 | R23 | | | |
| 6 | IO_L86N_6 | R24 | | | |
| 6 | IO_L87P_6 | R25 | | | |
| 6 | IO_L87N_6/VREF_6 | R26 | | | |
| 6 | IO_L88P_6 | P20 | | | |
| 6 | IO_L88N_6 | P21 | | | |
| 6 | IO_L89P_6 | P22 | | | |
| 6 | IO_L89N_6 | P23 | | | |
| 6 | IO_L90P_6 | P24 | | | |
| 6 | IO_L90N_6 | P25 | | | |
| | | | | | |
| 7 | IO_L90P_7 | N25 | | | |
| 7 | IO_L90N_7 | N24 | | | |
| 7 | IO_L89P_7 | N23 | | | |
| 7 | IO_L89N_7 | N22 | | | |
| 7 | IO_L88P_7 | N21 | | | |
| 7 | IO_L88N_7/VREF_7 | N20 | | | |
| 7 | IO_L87P_7 | M26 | | | |

*Table 8:* **FF672 — XC2VP2, XC2VP4, and XC2VP7**

| Bank | Pin Description | Pin Number | No Connects | | |
|---|---|---|---|---|---|
| | | | XC2VP2 | XC2VP4 | XC2VP7 |
| 7 | IO_L87N_7 | M25 | | | |
| 7 | IO_L86P_7 | M24 | | | |
| 7 | IO_L86N_7 | M23 | | | |
| 7 | IO_L85P_7 | M22 | | | |
| 7 | IO_L85N_7 | M21 | | | |
| 7 | IO_L60P_7 | N19 | NC | | |
| 7 | IO_L60N_7 | M19 | NC | | |
| 7 | IO_L59P_7 | L26 | NC | | |
| 7 | IO_L59N_7 | L25 | NC | | |
| 7 | IO_L58P_7 | L24 | NC | | |
| 7 | IO_L58N_7/VREF_7 | L23 | NC | | |
| 7 | IO_L57P_7 | L22 | NC | | |
| 7 | IO_L57N_7 | L21 | NC | | |
| 7 | IO_L56P_7 | M20 | NC | | |
| 7 | IO_L56N_7 | L20 | NC | | |
| 7 | IO_L55P_7 | L19 | NC | | |
| 7 | IO_L55N_7 | K20 | NC | | |
| 7 | IO_L54P_7 | K26 | NC | | |
| 7 | IO_L54N_7 | J26 | NC | | |
| 7 | IO_L53P_7 | K24 | NC | | |
| 7 | IO_L53N_7 | K23 | NC | | |
| 7 | IO_L52P_7 | K22 | NC | | |
| 7 | IO_L52N_7/VREF_7 | K21 | NC | | |
| 7 | IO_L51P_7 | J25 | NC | | |
| 7 | IO_L51N_7 | J24 | NC | | |
| 7 | IO_L50P_7 | J23 | NC | | |
| 7 | IO_L50N_7 | J22 | NC | | |
| 7 | IO_L49P_7 | J21 | NC | | |
| 7 | IO_L49N_7 | J20 | NC | | |
| 7 | IO_L48P_7 | H26 | NC | | |
| 7 | IO_L48N_7 | H25 | NC | | |
| 7 | IO_L47P_7 | H24 | NC | | |
| 7 | IO_L47N_7 | H23 | NC | | |
| 7 | IO_L46P_7 | H22 | NC | | |
| 7 | IO_L46N_7/VREF_7 | H21 | NC | | |
| 7 | IO_L45P_7 | G26 | NC | | |
| 7 | IO_L45N_7 | F26 | NC | | |

*Table 8:* **FF672 — XC2VP2, XC2VP4, and XC2VP7**

| Bank | Pin Description | Pin Number | No Connects | | |
|---|---|---|---|---|---|
| | | | XC2VP2 | XC2VP4 | XC2VP7 |
| 7 | IO_L44P_7 | G24 | NC | | |
| 7 | IO_L44N_7 | G23 | NC | | |
| 7 | IO_L43P_7 | G22 | NC | | |
| 7 | IO_L43N_7 | G21 | NC | | |
| 7 | IO_L42P_7 | F25 | NC | NC | NC |
| 7 | IO_L42N_7 | F24 | NC | NC | NC |
| 7 | IO_L40P_7 | F23 | NC | NC | NC |
| 7 | IO_L40N_7/VREF_7 | F22 | NC | NC | NC |
| 7 | IO_L06P_7 | E26 | | | |
| 7 | IO_L06N_7 | E25 | | | |
| 7 | IO_L05P_7 | E24 | | | |
| 7 | IO_L05N_7 | E23 | | | |
| 7 | IO_L04P_7 | D26 | | | |
| 7 | IO_L04N_7/VREF_7 | D25 | | | |
| 7 | IO_L03P_7 | C26 | | | |
| 7 | IO_L03N_7 | C25 | | | |
| 7 | IO_L02P_7 | B26 | | | |
| 7 | IO_L02N_7 | A25 | | | |
| 7 | IO_L01P_7/VRN_7 | D24 | | | |
| 7 | IO_L01N_7/VRP_7 | C23 | | | |
| | | | | | |
| 0 | VCCO_0 | C17 | | | |
| 0 | VCCO_0 | C20 | | | |
| 0 | VCCO_0 | H17 | | | |
| 0 | VCCO_0 | H18 | | | |
| 0 | VCCO_0 | J14 | | | |
| 0 | VCCO_0 | J15 | | | |
| 0 | VCCO_0 | J16 | | | |
| 1 | VCCO_1 | C7 | | | |
| 1 | VCCO_1 | H9 | | | |
| 1 | VCCO_1 | C10 | | | |
| 1 | VCCO_1 | H10 | | | |
| 1 | VCCO_1 | J11 | | | |
| 1 | VCCO_1 | J12 | | | |
| 1 | VCCO_1 | J13 | | | |
| 2 | VCCO_2 | G2 | | | |
| 2 | VCCO_2 | J8 | | | |

*Table 8:* **FF672 — XC2VP2, XC2VP4, and XC2VP7**

| Bank | Pin Description | Pin Number | No Connects | | |
|---|---|---|---|---|---|
| | | | XC2VP2 | XC2VP4 | XC2VP7 |
| 2 | VCCO_2 | K2 | | | |
| 2 | VCCO_2 | K8 | | | |
| 2 | VCCO_2 | L9 | | | |
| 2 | VCCO_2 | M9 | | | |
| 2 | VCCO_2 | N9 | | | |
| 3 | VCCO_3 | P9 | | | |
| 3 | VCCO_3 | R9 | | | |
| 3 | VCCO_3 | T9 | | | |
| 3 | VCCO_3 | U2 | | | |
| 3 | VCCO_3 | U8 | | | |
| 3 | VCCO_3 | V8 | | | |
| 3 | VCCO_3 | Y2 | | | |
| 4 | VCCO_4 | W9 | | | |
| 4 | VCCO_4 | AD7 | | | |
| 4 | VCCO_4 | V11 | | | |
| 4 | VCCO_4 | V12 | | | |
| 4 | VCCO_4 | V13 | | | |
| 4 | VCCO_4 | W10 | | | |
| 4 | VCCO_4 | AD10 | | | |
| 5 | VCCO_5 | V14 | | | |
| 5 | VCCO_5 | V15 | | | |
| 5 | VCCO_5 | V16 | | | |
| 5 | VCCO_5 | W17 | | | |
| 5 | VCCO_5 | W18 | | | |
| 5 | VCCO_5 | AD17 | | | |
| 5 | VCCO_5 | AD20 | | | |
| 6 | VCCO_6 | P18 | | | |
| 6 | VCCO_6 | R18 | | | |
| 6 | VCCO_6 | T18 | | | |
| 6 | VCCO_6 | U19 | | | |
| 6 | VCCO_6 | U25 | | | |
| 6 | VCCO_6 | V19 | | | |
| 6 | VCCO_6 | Y25 | | | |
| 7 | VCCO_7 | G25 | | | |
| 7 | VCCO_7 | J19 | | | |
| 7 | VCCO_7 | K19 | | | |
| 7 | VCCO_7 | K25 | | | |

*Table 8:* **FF672 — XC2VP2, XC2VP4, and XC2VP7**

| Bank | Pin Description | Pin Number | No Connects | | |
|---|---|---|---|---|---|
| | | | XC2VP2 | XC2VP4 | XC2VP7 |
| 7 | VCCO_7 | L18 | | | |
| 7 | VCCO_7 | M18 | | | |
| 7 | VCCO_7 | N18 | | | |
| | | | | | |
| N/A | CCLK | W7 | | | |
| N/A | PROG_B | D22 | | | |
| N/A | DONE | AB6 | | | |
| N/A | M0 | AC22 | | | |
| N/A | M1 | W20 | | | |
| N/A | M2 | AB21 | | | |
| N/A | TCK | G8 | | | |
| N/A | TDI | H20 | | | |
| N/A | TDO | H7 | | | |
| N/A | TMS | F7 | | | |
| N/A | PWRDWN_B | AC5 | | | |
| N/A | HSWAP_EN | E21 | | | |
| N/A | RSVD | D5 | | | |
| N/A | VBATT | E6 | | | |
| N/A | DXP | F20 | | | |
| N/A | DXN | G19 | | | |
| N/A | AVCCAUXTX7 | B11 | | | |
| N/A | VTTXPAD7 | B12 | | | |
| N/A | TXNPAD7 | A12 | | | |
| N/A | TXPPAD7 | A11 | | | |
| N/A | GNDA7 | C11 | | | |
| N/A | RXPPAD7 | A10 | | | |
| N/A | RXNPAD7 | A9 | | | |
| N/A | VTRXPAD7 | B10 | | | |
| N/A | AVCCAUXRX7 | B9 | | | |
| N/A | AVCCAUXTX9 | B6 | NC | NC | |
| N/A | VTTXPAD9 | B7 | NC | NC | |
| N/A | TXNPAD9 | A7 | NC | NC | |
| N/A | TXPPAD9 | A6 | NC | NC | |
| N/A | GNDA9 | C5 | NC | NC | |
| N/A | RXPPAD9 | A5 | NC | NC | |
| N/A | RXNPAD9 | A4 | NC | NC | |
| N/A | VTRXPAD9 | B5 | NC | NC | |

*Table 8:* **FF672 — XC2VP2, XC2VP4, and XC2VP7**

| Bank | Pin Description | Pin Number | No Connects | | |
|---|---|---|---|---|---|
| | | | XC2VP2 | XC2VP4 | XC2VP7 |
| N/A | AVCCAUXRX9 | B4 | NC | NC | |
| N/A | AVCCAUXRX16 | AE4 | NC | NC | |
| N/A | VTRXPAD16 | AE5 | NC | NC | |
| N/A | RXNPAD16 | AF4 | NC | NC | |
| N/A | RXPPAD16 | AF5 | NC | NC | |
| N/A | GNDA16 | AD5 | NC | NC | |
| N/A | TXPPAD16 | AF6 | NC | NC | |
| N/A | TXNPAD16 | AF7 | NC | NC | |
| N/A | VTTXPAD16 | AE7 | NC | NC | |
| N/A | AVCCAUXTX16 | AE6 | NC | NC | |
| N/A | AVCCAUXRX18 | AE9 | | | |
| N/A | VTRXPAD18 | AE10 | | | |
| N/A | RXNPAD18 | AF9 | | | |
| N/A | RXPPAD18 | AF10 | | | |
| N/A | GNDA18 | AD11 | | | |
| N/A | TXPPAD18 | AF11 | | | |
| N/A | TXNPAD18 | AF12 | | | |
| N/A | VTTXPAD18 | AE12 | | | |
| N/A | AVCCAUXTX18 | AE11 | | | |
| N/A | AVCCAUXTX4 | B22 | NC | NC | |
| N/A | VTTXPAD4 | B23 | NC | NC | |
| N/A | TXNPAD4 | A23 | NC | NC | |
| N/A | TXPPAD4 | A22 | NC | NC | |
| N/A | GNDA4 | C22 | NC | NC | |
| N/A | RXPPAD4 | A21 | NC | NC | |
| N/A | RXNPAD4 | A20 | NC | NC | |
| N/A | VTRXPAD4 | B21 | NC | NC | |
| N/A | AVCCAUXRX4 | B20 | NC | NC | |
| N/A | AVCCAUXTX6 | B17 | | | |
| N/A | VTTXPAD6 | B18 | | | |
| N/A | TXNPAD6 | A18 | | | |
| N/A | TXPPAD6 | A17 | | | |
| N/A | GNDA6 | C16 | | | |
| N/A | RXPPAD6 | A16 | | | |
| N/A | RXNPAD6 | A15 | | | |
| N/A | VTRXPAD6 | B16 | | | |
| N/A | AVCCAUXRX6 | B15 | | | |

*Table 8:* **FF672 — XC2VP2, XC2VP4, and XC2VP7**

| Bank | Pin Description | Pin Number | No Connects | | |
|---|---|---|---|---|---|
| | | | XC2VP2 | XC2VP4 | XC2VP7 |
| N/A | AVCCAUXRX19 | AE15 | | | |
| N/A | VTRXPAD19 | AE16 | | | |
| N/A | RXNPAD19 | AF15 | | | |
| N/A | RXPPAD19 | AF16 | | | |
| N/A | GNDA19 | AD16 | | | |
| N/A | TXPPAD19 | AF17 | | | |
| N/A | TXNPAD19 | AF18 | | | |
| N/A | VTTXPAD19 | AE18 | | | |
| N/A | AVCCAUXTX19 | AE17 | | | |
| N/A | AVCCAUXRX21 | AE20 | NC | NC | |
| N/A | VTRXPAD21 | AE21 | NC | NC | |
| N/A | RXNPAD21 | AF20 | NC | NC | |
| N/A | RXPPAD21 | AF21 | NC | NC | |
| N/A | GNDA21 | AD22 | NC | NC | |
| N/A | TXPPAD21 | AF22 | NC | NC | |
| N/A | TXNPAD21 | AF23 | NC | NC | |
| N/A | VTTXPAD21 | AE23 | NC | NC | |
| N/A | AVCCAUXTX21 | AE22 | NC | NC | |
| | | | | | |
| N/A | VCCINT | H8 | | | |
| N/A | VCCINT | J9 | | | |
| N/A | VCCINT | K9 | | | |
| N/A | VCCINT | U9 | | | |
| N/A | VCCINT | V9 | | | |
| N/A | VCCINT | W8 | | | |
| N/A | VCCINT | H19 | | | |
| N/A | VCCINT | J10 | | | |
| N/A | VCCINT | J17 | | | |
| N/A | VCCINT | J18 | | | |
| N/A | VCCINT | K11 | | | |
| N/A | VCCINT | K16 | | | |
| N/A | VCCINT | K18 | | | |
| N/A | VCCINT | L10 | | | |
| N/A | VCCINT | L17 | | | |
| N/A | VCCINT | T10 | | | |
| N/A | VCCINT | T17 | | | |
| N/A | VCCINT | U11 | | | |

*Table 8:* **FF672 — XC2VP2, XC2VP4, and XC2VP7**

| Bank | Pin Description | Pin Number | No Connects | | |
|---|---|---|---|---|---|
| | | | XC2VP2 | XC2VP4 | XC2VP7 |
| N/A | VCCINT | U16 | | | |
| N/A | VCCINT | U18 | | | |
| N/A | VCCINT | V10 | | | |
| N/A | VCCINT | V17 | | | |
| N/A | VCCINT | V18 | | | |
| N/A | VCCINT | W19 | | | |
| N/A | VCCAUX | B2 | | | |
| N/A | VCCAUX | N1 | | | |
| N/A | VCCAUX | P1 | | | |
| N/A | VCCAUX | A13 | | | |
| N/A | VCCAUX | A14 | | | |
| N/A | VCCAUX | AE2 | | | |
| N/A | VCCAUX | B25 | | | |
| N/A | VCCAUX | N26 | | | |
| N/A | VCCAUX | P26 | | | |
| N/A | VCCAUX | AE25 | | | |
| N/A | VCCAUX | AF13 | | | |
| N/A | VCCAUX | AF14 | | | |
| N/A | GND | C3 | | | |
| N/A | GND | D4 | | | |
| N/A | GND | E5 | | | |
| N/A | GND | F6 | | | |
| N/A | GND | G7 | | | |
| N/A | GND | Y7 | | | |
| N/A | GND | AA6 | | | |
| N/A | GND | AB5 | | | |
| N/A | GND | AC4 | | | |
| N/A | GND | AD3 | | | |
| N/A | GND | C24 | | | |
| N/A | GND | D23 | | | |
| N/A | GND | E22 | | | |
| N/A | GND | F21 | | | |
| N/A | GND | G20 | | | |
| N/A | GND | K10 | | | |
| N/A | GND | K12 | | | |
| N/A | GND | K13 | | | |
| N/A | GND | K14 | | | |

*Table 8:* **FF672 — XC2VP2, XC2VP4, and XC2VP7**

| Bank | Pin Description | Pin Number | No Connects | | |
|---|---|---|---|---|---|
| | | | XC2VP2 | XC2VP4 | XC2VP7 |
| N/A | GND | K15 | | | |
| N/A | GND | K17 | | | |
| N/A | GND | L11 | | | |
| N/A | GND | L12 | | | |
| N/A | GND | L13 | | | |
| N/A | GND | L14 | | | |
| N/A | GND | L15 | | | |
| N/A | GND | L16 | | | |
| N/A | GND | M10 | | | |
| N/A | GND | M11 | | | |
| N/A | GND | M12 | | | |
| N/A | GND | M13 | | | |
| N/A | GND | M14 | | | |
| N/A | GND | M15 | | | |
| N/A | GND | M16 | | | |
| N/A | GND | M17 | | | |
| N/A | GND | N10 | | | |
| N/A | GND | N11 | | | |
| N/A | GND | N12 | | | |
| N/A | GND | N13 | | | |
| N/A | GND | N14 | | | |
| N/A | GND | N15 | | | |
| N/A | GND | N16 | | | |
| N/A | GND | N17 | | | |
| N/A | GND | P10 | | | |
| N/A | GND | P11 | | | |
| N/A | GND | P12 | | | |
| N/A | GND | P13 | | | |
| N/A | GND | P14 | | | |
| N/A | GND | P15 | | | |
| N/A | GND | P16 | | | |
| N/A | GND | P17 | | | |
| N/A | GND | R10 | | | |
| N/A | GND | R11 | | | |
| N/A | GND | R12 | | | |
| N/A | GND | R13 | | | |
| N/A | GND | R14 | | | |

*Table 8:* **FF672 — XC2VP2, XC2VP4, and XC2VP7**

| Bank | Pin Description | Pin Number | No Connects | | |
|---|---|---|---|---|---|
| | | | XC2VP2 | XC2VP4 | XC2VP7 |
| N/A | GND | R15 | | | |
| N/A | GND | R16 | | | |
| N/A | GND | R17 | | | |
| N/A | GND | T11 | | | |
| N/A | GND | T12 | | | |
| N/A | GND | T13 | | | |
| N/A | GND | T14 | | | |
| N/A | GND | T15 | | | |
| N/A | GND | T16 | | | |
| N/A | GND | U10 | | | |
| N/A | GND | U12 | | | |
| N/A | GND | U13 | | | |
| N/A | GND | U14 | | | |
| N/A | GND | U15 | | | |
| N/A | GND | U17 | | | |
| N/A | GND | Y20 | | | |
| N/A | GND | AA21 | | | |
| N/A | GND | AB22 | | | |
| N/A | GND | AC23 | | | |
| N/A | GND | AD24 | | | |

**Notes:**
1. See Table 4 for an explanation of the signals available on this pin.

## FF672 Flip-Chip Fine-Pitch BGA Package Specifications (1.00mm pitch)

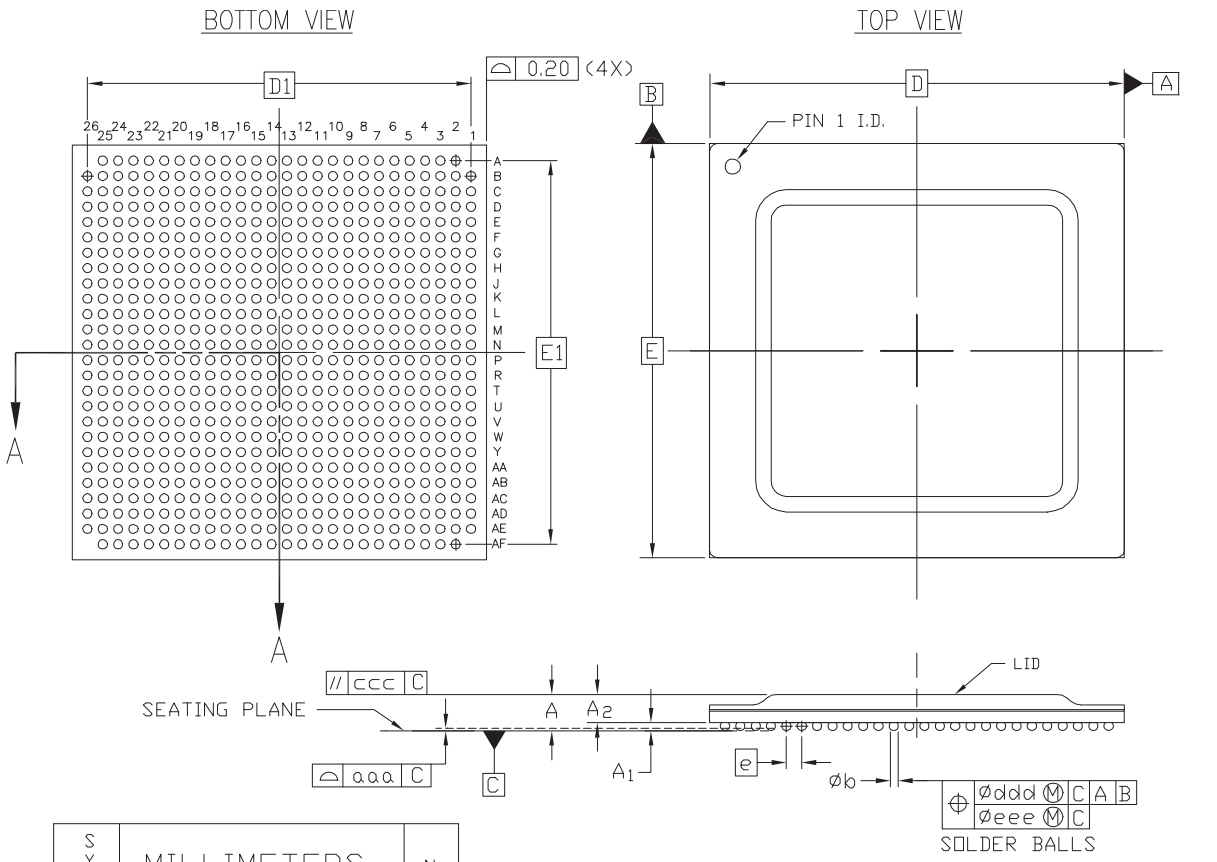


| SYMBOL | MILLIMETERS | | | NOTE |
|---|---|---|---|---|
| | MIN. | NOM. | MAX. | |
| A | — | 2.45 | 2.65 | |
| $A_1$ | 0.40 | 0.50 | 0.60 | |
| $A_2$ | — | — | 2.15 | |
| D/E | 27.00 BASIC | | | |
| $D_1/E_1$ | 25.00 REF | | | |
| e | 1.00 BASIC | | | |
| øb | 0.50 | 0.60 | 0.70 | |
| aaa | — | — | 0.20 | |
| ccc | — | — | 0.35 | |
| ddd | — | — | 0.30 | |
| eee | — | — | 0.10 | |
| M | 26 | | | 2 |

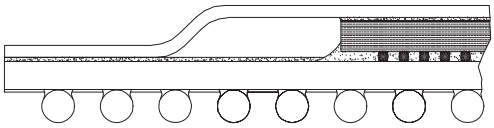

SECTION A–A
(NOT TO SCALE)

NOTES:

1. ALL DIMENSIONS AND TOLERANCES CONFORM TO ANSI Y14.5M–1994
2. SYMBOL 'M' IS THE BALL MATRIX SIZE.
3. CONFORMS TO JEDEC MS–034–AAL–1 (DEPOPULATED)

*Figure 4:* **FF672 Flip-Chip Fine-Pitch BGA Package Specifications**

## FF896 Flip-Chip Fine-Pitch BGA Package

As shown in Table 9, XC2VP7, XC2VP20, and XC2VP30 Virtex-II Pro devices are available in the FF896 flip-chip fine-pitch BGA package. Pins in each of these devices are the same, except for differences shown in the "No Connects" column. Following this table are the FF896 Flip-Chip Fine-Pitch BGA Package Specifications (1.00mm pitch).

*Table 9:* **FF896 — XC2VP7, XC2VP20, XC2VPX20, and XC2VP30**

| Bank | Pin Description | | Pin Number | No Connects | | |
|---|---|---|---|---|---|---|
| | Virtex-II Pro devices | XC2VPX20 (if Different) | | XC2VP7 | XC2VP20, XC2VPX20 | XC2VP30 |
| 0 | IO_L01N_0/VRP_0 | | E25 | | | |
| 0 | IO_L01P_0/VRN_0 | | E24 | | | |
| 0 | IO_L02N_0 | | F24 | | | |
| 0 | IO_L02P_0 | | F23 | | | |
| 0 | IO_L03N_0 | | E23 | | | |
| 0 | IO_L03P_0/VREF_0 | | E22 | | | |
| 0 | IO_L05_0/No_Pair | | G23 | | | |
| 0 | IO_L06N_0 | | H22 | | | |
| 0 | IO_L06P_0 | | G22 | | | |
| 0 | IO_L07N_0 | | F22 | | | |
| 0 | IO_L07P_0 | | F21 | | | |
| 0 | IO_L08N_0 | | D24 | | | |
| 0 | IO_L08P_0 | | C24 | | | |
| 0 | IO_L09N_0 | | H21 | | | |
| 0 | IO_L09P_0/VREF_0 | | G21 | | | |
| 0 | IO_L37N_0 | | E21 | | | |
| 0 | IO_L37P_0 | | D21 | | | |
| 0 | IO_L38N_0 | | D23 | | | |
| 0 | IO_L38P_0 | | C23 | | | |
| 0 | IO_L39N_0 | | H20 | | | |
| 0 | IO_L39P_0 | | G20 | | | |
| 0 | IO_L43N_0 | | E20 | | | |
| 0 | IO_L43P_0 | | D20 | | | |
| 0 | IO_L44N_0 | | B23 | | | |
| 0 | IO_L44P_0 | | A23 | | | |
| 0 | IO_L45N_0 | | H19 | | | |
| 0 | IO_L45P_0/VREF_0 | | G19 | | | |
| 0 | IO_L46N_0 | | E19 | NC | | |
| 0 | IO_L46P_0 | | E18 | NC | | |
| 0 | IO_L47N_0 | | C22 | NC | | |
| 0 | IO_L47P_0 | | B22 | NC | | |
| 0 | IO_L48N_0 | | F20 | NC | | |
| 0 | IO_L48P_0 | | F19 | NC | | |
| 0 | IO_L49N_0 | | G17 | NC | | |
| 0 | IO_L49P_0 | | F17 | NC | | |
| 0 | IO_L50_0/No_Pair | | B21 | NC | | |

*Table 9:* **FF896 — XC2VP7, XC2VP20, XC2VPX20, and XC2VP30**

| Bank | Pin Description | | Pin Number | No Connects | | |
|---|---|---|---|---|---|---|
| | Virtex-II Pro devices | XC2VPX20 (if Different) | | XC2VP7 | XC2VP20, XC2VPX20 | XC2VP30 |
| 0 | IO_L53_0/No_Pair | | A21 | NC | | |
| 0 | IO_L54N_0 | | H18 | NC | | |
| 0 | IO_L54P_0 | | G18 | NC | | |
| 0 | IO_L56N_0 | | C21 | NC | | |
| 0 | IO_L56P_0 | | C20 | NC | | |
| 0 | IO_L57N_0 | | J17 | NC | | |
| 0 | IO_L57P_0/VREF_0 | | H17 | NC | | |
| 0 | IO_L67N_0 | | E17 | | | |
| 0 | IO_L67P_0 | | D17 | | | |
| 0 | IO_L68N_0 | | D18 | | | |
| 0 | IO_L68P_0 | | C18 | | | |
| 0 | IO_L69N_0 | | J16 | | | |
| 0 | IO_L69P_0/VREF_0 | | H16 | | | |
| 0 | IO_L73N_0 | | E16 | | | |
| 0 | IO_L73P_0 | | D16 | | | |
| 0 | IO_L74N_0/GCLK7P | | C16 | | | |
| 0 | IO_L74P_0/GCLK6S | | B16 | | | |
| 0 | IO_L75N_0/GCLK5P | BREFCLKN | G16 | | | |
| 0 | IO_L75P_0/GCLK4S | BREFCLKP | F16 | | | |
| | | | | | | |
| 1 | IO_L75N_1/GCLK3P | | F15 | | | |
| 1 | IO_L75P_1/GCLK2S | | G15 | | | |
| 1 | IO_L74N_1/GCLK1P | | B15 | | | |
| 1 | IO_L74P_1/GCLK0S | | C15 | | | |
| 1 | IO_L73N_1 | | D15 | | | |
| 1 | IO_L73P_1 | | E15 | | | |
| 1 | IO_L69N_1/VREF_1 | | H15 | | | |
| 1 | IO_L69P_1 | | J15 | | | |
| 1 | IO_L68N_1 | | C13 | | | |
| 1 | IO_L68P_1 | | D13 | | | |
| 1 | IO_L67N_1 | | D14 | | | |
| 1 | IO_L67P_1 | | E14 | | | |
| 1 | IO_L57N_1/VREF_1 | | H14 | NC | | |
| 1 | IO_L57P_1 | | J14 | NC | | |
| 1 | IO_L56N_1 | | C11 | NC | | |
| 1 | IO_L56P_1 | | C10 | NC | | |

*Table 9:* **FF896 — XC2VP7, XC2VP20, XC2VPX20, and XC2VP30**

| Bank | Pin Description | | Pin Number | No Connects | | |
|---|---|---|---|---|---|---|
| | Virtex-II Pro devices | XC2VPX20 (if Different) | | XC2VP7 | XC2VP20, XC2VPX20 | XC2VP30 |
| 1 | IO_L54N_1 | | G13 | NC | | |
| 1 | IO_L54P_1 | | H13 | NC | | |
| 1 | IO_L53_1/No_Pair | | A10 | NC | | |
| 1 | IO_L50_1/No_Pair | | B10 | NC | | |
| 1 | IO_L49N_1 | | F14 | NC | | |
| 1 | IO_L49P_1 | | G14 | NC | | |
| 1 | IO_L48N_1 | | F12 | NC | | |
| 1 | IO_L48P_1 | | F11 | NC | | |
| 1 | IO_L47N_1 | | B9 | NC | | |
| 1 | IO_L47P_1 | | C9 | NC | | |
| 1 | IO_L46N_1 | | E13 | NC | | |
| 1 | IO_L46P_1 | | E12 | NC | | |
| 1 | IO_L45N_1/VREF_1 | | G12 | | | |
| 1 | IO_L45P_1 | | H12 | | | |
| 1 | IO_L44N_1 | | A8 | | | |
| 1 | IO_L44P_1 | | B8 | | | |
| 1 | IO_L43N_1 | | D11 | | | |
| 1 | IO_L43P_1 | | E11 | | | |
| 1 | IO_L39N_1 | | G11 | | | |
| 1 | IO_L39P_1 | | H11 | | | |
| 1 | IO_L38N_1 | | C8 | | | |
| 1 | IO_L38P_1 | | D8 | | | |
| 1 | IO_L37N_1 | | D10 | | | |
| 1 | IO_L37P_1 | | E10 | | | |
| 1 | IO_L09N_1/VREF_1 | | G10 | | | |
| 1 | IO_L09P_1 | | H10 | | | |
| 1 | IO_L08N_1 | | C7 | | | |
| 1 | IO_L08P_1 | | D7 | | | |
| 1 | IO_L07N_1 | | F10 | | | |
| 1 | IO_L07P_1 | | F9 | | | |
| 1 | IO_L06N_1 | | G9 | | | |
| 1 | IO_L06P_1 | | H9 | | | |
| 1 | IO_L05_1/No_Pair | | G8 | | | |
| 1 | IO_L03N_1/VREF_1 | | E9 | | | |
| 1 | IO_L03P_1 | | E8 | | | |
| 1 | IO_L02N_1 | | F8 | | | |

*Table 9:* **FF896 — XC2VP7, XC2VP20, XC2VPX20, and XC2VP30**

| Bank | Pin Description | | Pin Number | No Connects | | |
|---|---|---|---|---|---|---|
| | Virtex-II Pro devices | XC2VPX20 (if Different) | | XC2VP7 | XC2VP20, XC2VPX20 | XC2VP30 |
| 1 | IO_L02P_1 | | F7 | | | |
| 1 | IO_L01N_1/VRP_1 | | E7 | | | |
| 1 | IO_L01P_1/VRN_1 | | E6 | | | |
| | | | | | | |
| 2 | IO_L01N_2/VRP_2 | | A3 | | | |
| 2 | IO_L01P_2/VRN_2 | | B3 | | | |
| 2 | IO_L02N_2 | | G6 | | | |
| 2 | IO_L02P_2 | | G5 | | | |
| 2 | IO_L03N_2 | | C5 | | | |
| 2 | IO_L03P_2 | | D5 | | | |
| 2 | IO_L04N_2/VREF_2 | | C2 | | | |
| 2 | IO_L04P_2 | | C1 | | | |
| 2 | IO_L05N_2 | | J8 | | | |
| 2 | IO_L05P_2 | | J7 | | | |
| 2 | IO_L06N_2 | | C4 | | | |
| 2 | IO_L06P_2 | | D3 | | | |
| 2 | IO_L31N_2 | | D2 | NC | | |
| 2 | IO_L31P_2 | | D1 | NC | | |
| 2 | IO_L32N_2 | | H6 | NC | | |
| 2 | IO_L32P_2 | | H5 | NC | | |
| 2 | IO_L33N_2 | | E4 | NC | | |
| 2 | IO_L33P_2 | | E3 | NC | | |
| 2 | IO_L34N_2/VREF_2 | | E2 | NC | | |
| 2 | IO_L34P_2 | | E1 | NC | | |
| 2 | IO_L35N_2 | | K8 | NC | | |
| 2 | IO_L35P_2 | | K7 | NC | | |
| 2 | IO_L36N_2 | | F4 | NC | | |
| 2 | IO_L36P_2 | | F3 | NC | | |
| 2 | IO_L37N_2 | | F2 | NC | | |
| 2 | IO_L37P_2 | | F1 | NC | | |
| 2 | IO_L38N_2 | | J6 | NC | | |
| 2 | IO_L38P_2 | | J5 | NC | | |
| 2 | IO_L39N_2 | | G4 | NC | | |
| 2 | IO_L39P_2 | | G3 | NC | | |
| 2 | IO_L40N_2/VREF_2 | | G2 | NC | | |
| 2 | IO_L40P_2 | | G1 | NC | | |

*Table 9:* **FF896 — XC2VP7, XC2VP20, XC2VPX20, and XC2VP30**

| Bank | Pin Description | | Pin Number | No Connects | | |
|---|---|---|---|---|---|---|
| | Virtex-II Pro devices | XC2VPX20 (if Different) | | XC2VP7 | XC2VP20, XC2VPX20 | XC2VP30 |
| 2 | IO_L41N_2 | | L8 | NC | | |
| 2 | IO_L41P_2 | | L7 | NC | | |
| 2 | IO_L42N_2 | | H4 | NC | | |
| 2 | IO_L42P_2 | | H3 | NC | | |
| 2 | IO_L43N_2 | | H2 | | | |
| 2 | IO_L43P_2 | | J2 | | | |
| 2 | IO_L44N_2 | | M8 | | | |
| 2 | IO_L44P_2 | | M7 | | | |
| 2 | IO_L45N_2 | | K6 | | | |
| 2 | IO_L45P_2 | | K5 | | | |
| 2 | IO_L46N_2/VREF_2 | | J1 | | | |
| 2 | IO_L46P_2 | | K1 | | | |
| 2 | IO_L47N_2 | | M6 | | | |
| 2 | IO_L47P_2 | | M5 | | | |
| 2 | IO_L48N_2 | | J4 | | | |
| 2 | IO_L48P_2 | | J3 | | | |
| 2 | IO_L49N_2 | | K2 | | | |
| 2 | IO_L49P_2 | | L2 | | | |
| 2 | IO_L50N_2 | | N8 | | | |
| 2 | IO_L50P_2 | | N7 | | | |
| 2 | IO_L51N_2 | | K4 | | | |
| 2 | IO_L51P_2 | | K3 | | | |
| 2 | IO_L52N_2/VREF_2 | | L1 | | | |
| 2 | IO_L52P_2 | | M1 | | | |
| 2 | IO_L53N_2 | | N6 | | | |
| 2 | IO_L53P_2 | | N5 | | | |
| 2 | IO_L54N_2 | | L5 | | | |
| 2 | IO_L54P_2 | | L4 | | | |
| 2 | IO_L55N_2 | | M2 | | | |
| 2 | IO_L55P_2 | | N2 | | | |
| 2 | IO_L56N_2 | | P9 | | | |
| 2 | IO_L56P_2 | | R9 | | | |
| 2 | IO_L57N_2 | | M4 | | | |
| 2 | IO_L57P_2 | | M3 | | | |
| 2 | IO_L58N_2/VREF_2 | | N1 | | | |
| 2 | IO_L58P_2 | | P1 | | | |

*Table 9:* **FF896 — XC2VP7, XC2VP20, XC2VPX20, and XC2VP30**

| Bank | Pin Description | | Pin Number | No Connects | | |
|---|---|---|---|---|---|---|
| | Virtex-II Pro devices | XC2VPX20 (if Different) | | XC2VP7 | XC2VP20, XC2VPX20 | XC2VP30 |
| 2 | IO_L59N_2 | | P8 | | | |
| 2 | IO_L59P_2 | | P7 | | | |
| 2 | IO_L60N_2 | | N4 | | | |
| 2 | IO_L60P_2 | | N3 | | | |
| 2 | IO_L85N_2 | | P3 | | | |
| 2 | IO_L85P_2 | | P2 | | | |
| 2 | IO_L86N_2 | | R8 | | | |
| 2 | IO_L86P_2 | | R7 | | | |
| 2 | IO_L87N_2 | | P5 | | | |
| 2 | IO_L87P_2 | | P4 | | | |
| 2 | IO_L88N_2/VREF_2 | | R2 | | | |
| 2 | IO_L88P_2 | | T2 | | | |
| 2 | IO_L89N_2 | | R6 | | | |
| 2 | IO_L89P_2 | | R5 | | | |
| 2 | IO_L90N_2 | | R4 | | | |
| 2 | IO_L90P_2 | | R3 | | | |
| | | | | | | |
| 3 | IO_L90N_3 | | U1 | | | |
| 3 | IO_L90P_3 | | V1 | | | |
| 3 | IO_L89N_3 | | T5 | | | |
| 3 | IO_L89P_3 | | T6 | | | |
| 3 | IO_L88N_3 | | T3 | | | |
| 3 | IO_L88P_3 | | T4 | | | |
| 3 | IO_L87N_3/VREF_3 | | U2 | | | |
| 3 | IO_L87P_3 | | U3 | | | |
| 3 | IO_L86N_3 | | T7 | | | |
| 3 | IO_L86P_3 | | T8 | | | |
| 3 | IO_L85N_3 | | U4 | | | |
| 3 | IO_L85P_3 | | U5 | | | |
| 3 | IO_L60N_3 | | V2 | | | |
| 3 | IO_L60P_3 | | W2 | | | |
| 3 | IO_L59N_3 | | T9 | | | |
| 3 | IO_L59P_3 | | U9 | | | |
| 3 | IO_L58N_3 | | V3 | | | |
| 3 | IO_L58P_3 | | V4 | | | |
| 3 | IO_L57N_3/VREF_3 | | W1 | | | |

*Table 9:* **FF896 — XC2VP7, XC2VP20, XC2VPX20, and XC2VP30**

| Bank | Pin Description | | Pin Number | No Connects | | |
|---|---|---|---|---|---|---|
| | Virtex-II Pro devices | XC2VPX20 (if Different) | | XC2VP7 | XC2VP20, XC2VPX20 | XC2VP30 |
| 3 | IO_L57P_3 | | Y1 | | | |
| 3 | IO_L56N_3 | | U7 | | | |
| 3 | IO_L56P_3 | | U8 | | | |
| 3 | IO_L55N_3 | | V5 | | | |
| 3 | IO_L55P_3 | | V6 | | | |
| 3 | IO_L54N_3 | | Y2 | | | |
| 3 | IO_L54P_3 | | AA2 | | | |
| 3 | IO_L53N_3 | | V7 | | | |
| 3 | IO_L53P_3 | | V8 | | | |
| 3 | IO_L52N_3 | | W3 | | | |
| 3 | IO_L52P_3 | | W4 | | | |
| 3 | IO_L51N_3/VREF_3 | | AA1 | | | |
| 3 | IO_L51P_3 | | AB1 | | | |
| 3 | IO_L50N_3 | | W5 | | | |
| 3 | IO_L50P_3 | | W6 | | | |
| 3 | IO_L49N_3 | | Y4 | | | |
| 3 | IO_L49P_3 | | Y5 | | | |
| 3 | IO_L48N_3 | | AA3 | | | |
| 3 | IO_L48P_3 | | AA4 | | | |
| 3 | IO_L47N_3 | | W7 | | | |
| 3 | IO_L47P_3 | | W8 | | | |
| 3 | IO_L46N_3 | | AB3 | | | |
| 3 | IO_L46P_3 | | AB4 | | | |
| 3 | IO_L45N_3/VREF_3 | | AB2 | | | |
| 3 | IO_L45P_3 | | AC2 | | | |
| 3 | IO_L44N_3 | | AA5 | | | |
| 3 | IO_L44P_3 | | AA6 | | | |
| 3 | IO_L43N_3 | | AC3 | | | |
| 3 | IO_L43P_3 | | AC4 | | | |
| 3 | IO_L42N_3 | | AD1 | NC | | |
| 3 | IO_L42P_3 | | AD2 | NC | | |
| 3 | IO_L41N_3 | | Y7 | NC | | |
| 3 | IO_L41P_3 | | Y8 | NC | | |
| 3 | IO_L40N_3 | | AB5 | NC | | |
| 3 | IO_L40P_3 | | AB6 | NC | | |
| 3 | IO_L39N_3/VREF_3 | | AE1 | NC | | |

*Table 9:* **FF896 — XC2VP7, XC2VP20, XC2VPX20, and XC2VP30**

| Bank | Pin Description | | Pin Number | No Connects | | |
|---|---|---|---|---|---|---|
| | Virtex-II Pro devices | XC2VPX20 (if Different) | | XC2VP7 | XC2VP20, XC2VPX20 | XC2VP30 |
| 3 | IO_L39P_3 | | AE2 | NC | | |
| 3 | IO_L38N_3 | | AA7 | NC | | |
| 3 | IO_L38P_3 | | AA8 | NC | | |
| 3 | IO_L37N_3 | | AD3 | NC | | |
| 3 | IO_L37P_3 | | AD4 | NC | | |
| 3 | IO_L36N_3 | | AF1 | NC | | |
| 3 | IO_L36P_3 | | AF2 | NC | | |
| 3 | IO_L35N_3 | | AC5 | NC | | |
| 3 | IO_L35P_3 | | AC6 | NC | | |
| 3 | IO_L34N_3 | | AF3 | NC | | |
| 3 | IO_L34P_3 | | AF4 | NC | | |
| 3 | IO_L33N_3/VREF_3 | | AE3 | NC | | |
| 3 | IO_L33P_3 | | AE4 | NC | | |
| 3 | IO_L32N_3 | | AB7 | NC | | |
| 3 | IO_L32P_3 | | AB8 | NC | | |
| 3 | IO_L31N_3 | | AE5 | NC | | |
| 3 | IO_L31P_3 | | AF6 | NC | | |
| 3 | IO_L06N_3 | | AG1 | | | |
| 3 | IO_L06P_3 | | AG2 | | | |
| 3 | IO_L05N_3 | | AD5 | | | |
| 3 | IO_L05P_3 | | AD6 | | | |
| 3 | IO_L04N_3 | | AG3 | | | |
| 3 | IO_L04P_3 | | AH4 | | | |
| 3 | IO_L03N_3/VREF_3 | | AH1 | | | |
| 3 | IO_L03P_3 | | AH2 | | | |
| 3 | IO_L02N_3 | | AG5 | | | |
| 3 | IO_L02P_3 | | AH5 | | | |
| 3 | IO_L01N_3/VRP_3 | | AJ3 | | | |
| 3 | IO_L01P_3/VRN_3 | | AK3 | | | |
| | | | | | | |
| 4 | IO_L01N_4/BUSY/DOUT(1) | | AG6 | | | |
| 4 | IO_L01P_4/INIT_B | | AF7 | | | |
| 4 | IO_L02N_4/D0/DIN(1) | | AC9 | | | |
| 4 | IO_L02P_4/D1 | | AD9 | | | |
| 4 | IO_L03N_4/D2 | | AG7 | | | |
| 4 | IO_L03P_4/D3 | | AH7 | | | |

*Table 9:* **FF896 — XC2VP7, XC2VP20, XC2VPX20, and XC2VP30**

| Bank | Pin Description | | Pin Number | No Connects | | |
|---|---|---|---|---|---|---|
| | Virtex-II Pro devices | XC2VPX20 (if Different) | | XC2VP7 | XC2VP20, XC2VPX20 | XC2VP30 |
| 4 | IO_L05_4/No_Pair | | AD8 | | | |
| 4 | IO_L06N_4/VRP_4 | | AG8 | | | |
| 4 | IO_L06P_4/VRN_4 | | AH8 | | | |
| 4 | IO_L07N_4 | | AC10 | | | |
| 4 | IO_L07P_4/VREF_4 | | AD10 | | | |
| 4 | IO_L08N_4 | | AE7 | | | |
| 4 | IO_L08P_4 | | AE8 | | | |
| 4 | IO_L09N_4 | | AJ8 | | | |
| 4 | IO_L09P_4/VREF_4 | | AK8 | | | |
| 4 | IO_L37N_4 | | AC11 | | | |
| 4 | IO_L37P_4 | | AD11 | | | |
| 4 | IO_L38N_4 | | AF8 | | | |
| 4 | IO_L38P_4 | | AF9 | | | |
| 4 | IO_L39N_4 | | AF10 | | | |
| 4 | IO_L39P_4 | | AG10 | | | |
| 4 | IO_L43N_4 | | AC12 | | | |
| 4 | IO_L43P_4 | | AD12 | | | |
| 4 | IO_L44N_4 | | AE9 | | | |
| 4 | IO_L44P_4 | | AE10 | | | |
| 4 | IO_L45N_4 | | AH9 | | | |
| 4 | IO_L45P_4/VREF_4 | | AJ9 | | | |
| 4 | IO_L46N_4 | | AC13 | NC | | |
| 4 | IO_L46P_4 | | AD13 | NC | | |
| 4 | IO_L47N_4 | | AE11 | NC | | |
| 4 | IO_L47P_4 | | AE12 | NC | | |
| 4 | IO_L48N_4 | | AH10 | NC | | |
| 4 | IO_L48P_4 | | AH11 | NC | | |
| 4 | IO_L49N_4 | | AB14 | NC | | |
| 4 | IO_L49P_4 | | AC14 | NC | | |
| 4 | IO_L50_4/No_Pair | | AF11 | NC | | |
| 4 | IO_L53_4/No_Pair | | AG11 | NC | | |
| 4 | IO_L54N_4 | | AJ10 | NC | | |
| 4 | IO_L54P_4 | | AK10 | NC | | |
| 4 | IO_L56N_4 | | AF12 | NC | | |
| 4 | IO_L56P_4 | | AF13 | NC | | |
| 4 | IO_L57N_4 | | AG13 | NC | | |

*Table 9:* **FF896 — XC2VP7, XC2VP20, XC2VPX20, and XC2VP30**

| Bank | Pin Description | | Pin Number | No Connects | | |
|---|---|---|---|---|---|---|
| | Virtex-II Pro devices | XC2VPX20 (if Different) | | XC2VP7 | XC2VP20, XC2VPX20 | XC2VP30 |
| 4 | IO_L57P_4/VREF_4 | | AH13 | NC | | |
| 4 | IO_L67N_4 | | AB15 | | | |
| 4 | IO_L67P_4 | | AC15 | | | |
| 4 | IO_L68N_4 | | AD14 | | | |
| 4 | IO_L68P_4 | | AE14 | | | |
| 4 | IO_L69N_4 | | AF14 | | | |
| 4 | IO_L69P_4/VREF_4 | | AG14 | | | |
| 4 | IO_L73N_4 | | AD15 | | | |
| 4 | IO_L73P_4 | | AE15 | | | |
| 4 | IO_L74N_4/GCLK3S | | AF15 | | | |
| 4 | IO_L74P_4/GCLK2P | | AG15 | | | |
| 4 | IO_L75N_4/GCLK1S | | AH15 | | | |
| 4 | IO_L75P_4/GCLK0P | | AJ15 | | | |
| | | | | | | |
| 5 | IO_L75N_5/GCLK7S | BREFCLKN | AJ16 | | | |
| 5 | IO_L75P_5/GCLK6P | BREFCLKP | AH16 | | | |
| 5 | IO_L74N_5/GCLK5S | | AG16 | | | |
| 5 | IO_L74P_5/GCLK4P | | AF16 | | | |
| 5 | IO_L73N_5 | | AE16 | | | |
| 5 | IO_L73P_5 | | AD16 | | | |
| 5 | IO_L69N_5/VREF_5 | | AG17 | | | |
| 5 | IO_L69P_5 | | AF17 | | | |
| 5 | IO_L68N_5 | | AE17 | | | |
| 5 | IO_L68P_5 | | AD17 | | | |
| 5 | IO_L67N_5 | | AC16 | | | |
| 5 | IO_L67P_5 | | AB16 | | | |
| 5 | IO_L57N_5/VREF_5 | | AH18 | NC | | |
| 5 | IO_L57P_5 | | AG18 | NC | | |
| 5 | IO_L56N_5 | | AF18 | NC | | |
| 5 | IO_L56P_5 | | AF19 | NC | | |
| 5 | IO_L54N_5 | | AK21 | NC | | |
| 5 | IO_L54P_5 | | AJ21 | NC | | |
| 5 | IO_L53_5/No_Pair | | AG20 | NC | | |
| 5 | IO_L50_5/No_Pair | | AF20 | NC | | |
| 5 | IO_L49N_5 | | AC17 | NC | | |
| 5 | IO_L49P_5 | | AB17 | NC | | |

*Table 9:* **FF896 — XC2VP7, XC2VP20, XC2VPX20, and XC2VP30**

| Bank | Pin Description | | Pin Number | No Connects | | |
|---|---|---|---|---|---|---|
| | Virtex-II Pro devices | XC2VPX20 (if Different) | | XC2VP7 | XC2VP20, XC2VPX20 | XC2VP30 |
| 5 | IO_L48N_5 | | AH20 | NC | | |
| 5 | IO_L48P_5 | | AH21 | NC | | |
| 5 | IO_L47N_5 | | AE19 | NC | | |
| 5 | IO_L47P_5 | | AE20 | NC | | |
| 5 | IO_L46N_5 | | AD18 | NC | | |
| 5 | IO_L46P_5 | | AC18 | NC | | |
| 5 | IO_L45N_5/VREF_5 | | AJ22 | | | |
| 5 | IO_L45P_5 | | AH22 | | | |
| 5 | IO_L44N_5 | | AE21 | | | |
| 5 | IO_L44P_5 | | AE22 | | | |
| 5 | IO_L43N_5 | | AD19 | | | |
| 5 | IO_L43P_5 | | AC19 | | | |
| 5 | IO_L39N_5 | | AG21 | | | |
| 5 | IO_L39P_5 | | AF21 | | | |
| 5 | IO_L38N_5 | | AF22 | | | |
| 5 | IO_L38P_5 | | AF23 | | | |
| 5 | IO_L37N_5 | | AD20 | | | |
| 5 | IO_L37P_5 | | AC20 | | | |
| 5 | IO_L09N_5/VREF_5 | | AK23 | | | |
| 5 | IO_L09P_5 | | AJ23 | | | |
| 5 | IO_L08N_5 | | AE23 | | | |
| 5 | IO_L08P_5 | | AE24 | | | |
| 5 | IO_L07N_5/VREF_5 | | AD21 | | | |
| 5 | IO_L07P_5 | | AC21 | | | |
| 5 | IO_L06N_5/VRP_5 | | AH23 | | | |
| 5 | IO_L06P_5/VRN_5 | | AG23 | | | |
| 5 | IO_L05_5/No_Pair | | AD23 | | | |
| 5 | IO_L03N_5/D4 | | AH24 | | | |
| 5 | IO_L03P_5/D5 | | AG24 | | | |
| 5 | IO_L02N_5/D6 | | AD22 | | | |
| 5 | IO_L02P_5/D7 | | AC22 | | | |
| 5 | IO_L01N_5/RDWR_B | | AF24 | | | |
| 5 | IO_L01P_5/CS_B | | AG25 | | | |
| | | | | | | |
| 6 | IO_L01P_6/VRN_6 | | AK28 | | | |
| 6 | IO_L01N_6/VRP_6 | | AJ28 | | | |

*Table 9:* **FF896 — XC2VP7, XC2VP20, XC2VPX20, and XC2VP30**

| Bank | Pin Description | | Pin Number | No Connects | | |
|---|---|---|---|---|---|---|
| | Virtex-II Pro devices | XC2VPX20 (if Different) | | XC2VP7 | XC2VP20, XC2VPX20 | XC2VP30 |
| 6 | IO_L02P_6 | | AH26 | | | |
| 6 | IO_L02N_6 | | AG26 | | | |
| 6 | IO_L03P_6 | | AH29 | | | |
| 6 | IO_L03N_6/VREF_6 | | AH30 | | | |
| 6 | IO_L04P_6 | | AH27 | | | |
| 6 | IO_L04N_6 | | AG28 | | | |
| 6 | IO_L05P_6 | | AD25 | | | |
| 6 | IO_L05N_6 | | AD26 | | | |
| 6 | IO_L06P_6 | | AG29 | | | |
| 6 | IO_L06N_6 | | AG30 | | | |
| 6 | IO_L31P_6 | | AF25 | NC | | |
| 6 | IO_L31N_6 | | AE26 | NC | | |
| 6 | IO_L32P_6 | | AB23 | NC | | |
| 6 | IO_L32N_6 | | AB24 | NC | | |
| 6 | IO_L33P_6 | | AE27 | NC | | |
| 6 | IO_L33N_6/VREF_6 | | AE28 | NC | | |
| 6 | IO_L34P_6 | | AF27 | NC | | |
| 6 | IO_L34N_6 | | AF28 | NC | | |
| 6 | IO_L35P_6 | | AC25 | NC | | |
| 6 | IO_L35N_6 | | AC26 | NC | | |
| 6 | IO_L36P_6 | | AF29 | NC | | |
| 6 | IO_L36N_6 | | AF30 | NC | | |
| 6 | IO_L37P_6 | | AD27 | NC | | |
| 6 | IO_L37N_6 | | AD28 | NC | | |
| 6 | IO_L38P_6 | | AA23 | NC | | |
| 6 | IO_L38N_6 | | AA24 | NC | | |
| 6 | IO_L39P_6 | | AE29 | NC | | |
| 6 | IO_L39N_6/VREF_6 | | AE30 | NC | | |
| 6 | IO_L40P_6 | | AB25 | NC | | |
| 6 | IO_L40N_6 | | AB26 | NC | | |
| 6 | IO_L41P_6 | | Y23 | NC | | |
| 6 | IO_L41N_6 | | Y24 | NC | | |
| 6 | IO_L42P_6 | | AD29 | NC | | |
| 6 | IO_L42N_6 | | AD30 | NC | | |
| 6 | IO_L43P_6 | | AC27 | | | |
| 6 | IO_L43N_6 | | AC28 | | | |

*Table 9:* **FF896 — XC2VP7, XC2VP20, XC2VPX20, and XC2VP30**

| Bank | Pin Description | | Pin Number | No Connects | | |
|---|---|---|---|---|---|---|
| | Virtex-II Pro devices | XC2VPX20 (if Different) | | XC2VP7 | XC2VP20, XC2VPX20 | XC2VP30 |
| 6 | IO_L44P_6 | | AA25 | | | |
| 6 | IO_L44N_6 | | AA26 | | | |
| 6 | IO_L45P_6 | | AC29 | | | |
| 6 | IO_L45N_6/VREF_6 | | AB29 | | | |
| 6 | IO_L46P_6 | | AB27 | | | |
| 6 | IO_L46N_6 | | AB28 | | | |
| 6 | IO_L47P_6 | | W23 | | | |
| 6 | IO_L47N_6 | | W24 | | | |
| 6 | IO_L48P_6 | | AA27 | | | |
| 6 | IO_L48N_6 | | AA28 | | | |
| 6 | IO_L49P_6 | | Y26 | | | |
| 6 | IO_L49N_6 | | Y27 | | | |
| 6 | IO_L50P_6 | | W25 | | | |
| 6 | IO_L50N_6 | | W26 | | | |
| 6 | IO_L51P_6 | | AB30 | | | |
| 6 | IO_L51N_6/VREF_6 | | AA30 | | | |
| 6 | IO_L52P_6 | | W27 | | | |
| 6 | IO_L52N_6 | | W28 | | | |
| 6 | IO_L53P_6 | | V23 | | | |
| 6 | IO_L53N_6 | | V24 | | | |
| 6 | IO_L54P_6 | | AA29 | | | |
| 6 | IO_L54N_6 | | Y29 | | | |
| 6 | IO_L55P_6 | | V25 | | | |
| 6 | IO_L55N_6 | | V26 | | | |
| 6 | IO_L56P_6 | | U23 | | | |
| 6 | IO_L56N_6 | | U24 | | | |
| 6 | IO_L57P_6 | | Y30 | | | |
| 6 | IO_L57N_6/VREF_6 | | W30 | | | |
| 6 | IO_L58P_6 | | V27 | | | |
| 6 | IO_L58N_6 | | V28 | | | |
| 6 | IO_L59P_6 | | U22 | | | |
| 6 | IO_L59N_6 | | T22 | | | |
| 6 | IO_L60P_6 | | W29 | | | |
| 6 | IO_L60N_6 | | V29 | | | |
| 6 | IO_L85P_6 | | U26 | | | |
| 6 | IO_L85N_6 | | U27 | | | |

*Table 9:* **FF896 — XC2VP7, XC2VP20, XC2VPX20, and XC2VP30**

| Bank | Pin Description | | Pin Number | No Connects | | |
|---|---|---|---|---|---|---|
| | Virtex-II Pro devices | XC2VPX20 (if Different) | | XC2VP7 | XC2VP20, XC2VPX20 | XC2VP30 |
| 6 | IO_L86P_6 | | T23 | | | |
| 6 | IO_L86N_6 | | T24 | | | |
| 6 | IO_L87P_6 | | U28 | | | |
| 6 | IO_L87N_6/VREF_6 | | U29 | | | |
| 6 | IO_L88P_6 | | T27 | | | |
| 6 | IO_L88N_6 | | T28 | | | |
| 6 | IO_L89P_6 | | T25 | | | |
| 6 | IO_L89N_6 | | T26 | | | |
| 6 | IO_L90P_6 | | V30 | | | |
| 6 | IO_L90N_6 | | U30 | | | |
| | | | | | | |
| 7 | IO_L90P_7 | | R28 | | | |
| 7 | IO_L90N_7 | | R27 | | | |
| 7 | IO_L89P_7 | | R26 | | | |
| 7 | IO_L89N_7 | | R25 | | | |
| 7 | IO_L88P_7 | | T29 | | | |
| 7 | IO_L88N_7/VREF_7 | | R29 | | | |
| 7 | IO_L87P_7 | | P27 | | | |
| 7 | IO_L87N_7 | | P26 | | | |
| 7 | IO_L86P_7 | | R24 | | | |
| 7 | IO_L86N_7 | | R23 | | | |
| 7 | IO_L85P_7 | | P29 | | | |
| 7 | IO_L85N_7 | | P28 | | | |
| 7 | IO_L60P_7 | | N28 | | | |
| 7 | IO_L60N_7 | | N27 | | | |
| 7 | IO_L59P_7 | | P24 | | | |
| 7 | IO_L59N_7 | | P23 | | | |
| 7 | IO_L58P_7 | | P30 | | | |
| 7 | IO_L58N_7/VREF_7 | | N30 | | | |
| 7 | IO_L57P_7 | | M28 | | | |
| 7 | IO_L57N_7 | | M27 | | | |
| 7 | IO_L56P_7 | | R22 | | | |
| 7 | IO_L56N_7 | | P22 | | | |
| 7 | IO_L55P_7 | | N29 | | | |
| 7 | IO_L55N_7 | | M29 | | | |
| 7 | IO_L54P_7 | | L27 | | | |

*Table 9:* **FF896 — XC2VP7, XC2VP20, XC2VPX20, and XC2VP30**

| Bank | Pin Description | | Pin Number | No Connects | | |
|---|---|---|---|---|---|---|
| | Virtex-II Pro devices | XC2VPX20 (if Different) | | XC2VP7 | XC2VP20, XC2VPX20 | XC2VP30 |
| 7 | IO_L54N_7 | | L26 | | | |
| 7 | IO_L53P_7 | | N26 | | | |
| 7 | IO_L53N_7 | | N25 | | | |
| 7 | IO_L52P_7 | | M30 | | | |
| 7 | IO_L52N_7/VREF_7 | | L30 | | | |
| 7 | IO_L51P_7 | | K28 | | | |
| 7 | IO_L51N_7 | | K27 | | | |
| 7 | IO_L50P_7 | | N24 | | | |
| 7 | IO_L50N_7 | | N23 | | | |
| 7 | IO_L49P_7 | | L29 | | | |
| 7 | IO_L49N_7 | | K29 | | | |
| 7 | IO_L48P_7 | | J28 | | | |
| 7 | IO_L48N_7 | | J27 | | | |
| 7 | IO_L47P_7 | | M26 | | | |
| 7 | IO_L47N_7 | | M25 | | | |
| 7 | IO_L46P_7 | | K30 | | | |
| 7 | IO_L46N_7/VREF_7 | | J30 | | | |
| 7 | IO_L45P_7 | | K26 | | | |
| 7 | IO_L45N_7 | | K25 | | | |
| 7 | IO_L44P_7 | | M24 | | | |
| 7 | IO_L44N_7 | | M23 | | | |
| 7 | IO_L43P_7 | | J29 | | | |
| 7 | IO_L43N_7 | | H29 | | | |
| 7 | IO_L42P_7 | | H28 | NC | | |
| 7 | IO_L42N_7 | | H27 | NC | | |
| 7 | IO_L41P_7 | | L24 | NC | | |
| 7 | IO_L41N_7 | | L23 | NC | | |
| 7 | IO_L40P_7 | | G30 | NC | | |
| 7 | IO_L40N_7/VREF_7 | | G29 | NC | | |
| 7 | IO_L39P_7 | | G28 | NC | | |
| 7 | IO_L39N_7 | | G27 | NC | | |
| 7 | IO_L38P_7 | | J26 | NC | | |
| 7 | IO_L38N_7 | | J25 | NC | | |
| 7 | IO_L37P_7 | | F30 | NC | | |
| 7 | IO_L37N_7 | | F29 | NC | | |
| 7 | IO_L36P_7 | | F28 | NC | | |

*Table 9:* **FF896 — XC2VP7, XC2VP20, XC2VPX20, and XC2VP30**

| Bank | Pin Description | | Pin Number | No Connects | | |
|---|---|---|---|---|---|---|
| | Virtex-II Pro devices | XC2VPX20 (if Different) | | XC2VP7 | XC2VP20, XC2VPX20 | XC2VP30 |
| 7 | IO_L36N_7 | | F27 | NC | | |
| 7 | IO_L35P_7 | | K24 | NC | | |
| 7 | IO_L35N_7 | | K23 | NC | | |
| 7 | IO_L34P_7 | | E30 | NC | | |
| 7 | IO_L34N_7/VREF_7 | | E29 | NC | | |
| 7 | IO_L33P_7 | | E28 | NC | | |
| 7 | IO_L33N_7 | | E27 | NC | | |
| 7 | IO_L32P_7 | | H26 | NC | | |
| 7 | IO_L32N_7 | | H25 | NC | | |
| 7 | IO_L31P_7 | | D30 | NC | | |
| 7 | IO_L31N_7 | | D29 | NC | | |
| 7 | IO_L06P_7 | | D28 | | | |
| 7 | IO_L06N_7 | | C27 | | | |
| 7 | IO_L05P_7 | | J24 | | | |
| 7 | IO_L05N_7 | | J23 | | | |
| 7 | IO_L04P_7 | | C30 | | | |
| 7 | IO_L04N_7/VREF_7 | | C29 | | | |
| 7 | IO_L03P_7 | | D26 | | | |
| 7 | IO_L03N_7 | | C26 | | | |
| 7 | IO_L02P_7 | | G26 | | | |
| 7 | IO_L02N_7 | | G25 | | | |
| 7 | IO_L01P_7/VRN_7 | | B28 | | | |
| 7 | IO_L01N_7/VRP_7 | | A28 | | | |
| | | | | | | |
| 0 | VCCO_0 | | K21 | | | |
| 0 | VCCO_0 | | K20 | | | |
| 0 | VCCO_0 | | K19 | | | |
| 0 | VCCO_0 | | K18 | | | |
| 0 | VCCO_0 | | K17 | | | |
| 0 | VCCO_0 | | K16 | | | |
| 0 | VCCO_0 | | J21 | | | |
| 0 | VCCO_0 | | J20 | | | |
| 0 | VCCO_0 | | J19 | | | |
| 0 | VCCO_0 | | J18 | | | |
| 1 | VCCO_1 | | K15 | | | |
| 1 | VCCO_1 | | K14 | | | |

*Table 9:* **FF896 — XC2VP7, XC2VP20, XC2VPX20, and XC2VP30**

| Bank | Pin Description | | Pin Number | No Connects | | |
|---|---|---|---|---|---|---|
| | Virtex-II Pro devices | XC2VPX20 (if Different) | | XC2VP7 | XC2VP20, XC2VPX20 | XC2VP30 |
| 1 | VCCO_1 | | K13 | | | |
| 1 | VCCO_1 | | K12 | | | |
| 1 | VCCO_1 | | K11 | | | |
| 1 | VCCO_1 | | K10 | | | |
| 1 | VCCO_1 | | J13 | | | |
| 1 | VCCO_1 | | J12 | | | |
| 1 | VCCO_1 | | J11 | | | |
| 1 | VCCO_1 | | J10 | | | |
| 2 | VCCO_2 | | R10 | | | |
| 2 | VCCO_2 | | P10 | | | |
| 2 | VCCO_2 | | N10 | | | |
| 2 | VCCO_2 | | N9 | | | |
| 2 | VCCO_2 | | M10 | | | |
| 2 | VCCO_2 | | M9 | | | |
| 2 | VCCO_2 | | L10 | | | |
| 2 | VCCO_2 | | L9 | | | |
| 2 | VCCO_2 | | K9 | | | |
| 2 | VCCO_2 | | J9 | | | |
| 3 | VCCO_3 | | AB9 | | | |
| 3 | VCCO_3 | | AA9 | | | |
| 3 | VCCO_3 | | Y10 | | | |
| 3 | VCCO_3 | | Y9 | | | |
| 3 | VCCO_3 | | W10 | | | |
| 3 | VCCO_3 | | W9 | | | |
| 3 | VCCO_3 | | V10 | | | |
| 3 | VCCO_3 | | V9 | | | |
| 3 | VCCO_3 | | U10 | | | |
| 3 | VCCO_3 | | T10 | | | |
| 4 | VCCO_4 | | AB13 | | | |
| 4 | VCCO_4 | | AB12 | | | |
| 4 | VCCO_4 | | AB11 | | | |
| 4 | VCCO_4 | | AB10 | | | |
| 4 | VCCO_4 | | AA15 | | | |
| 4 | VCCO_4 | | AA14 | | | |
| 4 | VCCO_4 | | AA13 | | | |
| 4 | VCCO_4 | | AA12 | | | |

*Table 9:* **FF896 — XC2VP7, XC2VP20, XC2VPX20, and XC2VP30**

| Bank | Pin Description | | Pin Number | No Connects | | |
|---|---|---|---|---|---|---|
| | Virtex-II Pro devices | XC2VPX20 (if Different) | | XC2VP7 | XC2VP20, XC2VPX20 | XC2VP30 |
| 4 | VCCO_4 | | AA11 | | | |
| 4 | VCCO_4 | | AA10 | | | |
| 5 | VCCO_5 | | AB21 | | | |
| 5 | VCCO_5 | | AB20 | | | |
| 5 | VCCO_5 | | AB19 | | | |
| 5 | VCCO_5 | | AB18 | | | |
| 5 | VCCO_5 | | AA21 | | | |
| 5 | VCCO_5 | | AA20 | | | |
| 5 | VCCO_5 | | AA19 | | | |
| 5 | VCCO_5 | | AA18 | | | |
| 5 | VCCO_5 | | AA17 | | | |
| 5 | VCCO_5 | | AA16 | | | |
| 6 | VCCO_6 | | AB22 | | | |
| 6 | VCCO_6 | | AA22 | | | |
| 6 | VCCO_6 | | Y22 | | | |
| 6 | VCCO_6 | | Y21 | | | |
| 6 | VCCO_6 | | W22 | | | |
| 6 | VCCO_6 | | W21 | | | |
| 6 | VCCO_6 | | V22 | | | |
| 6 | VCCO_6 | | V21 | | | |
| 6 | VCCO_6 | | U21 | | | |
| 6 | VCCO_6 | | T21 | | | |
| 7 | VCCO_7 | | R21 | | | |
| 7 | VCCO_7 | | P21 | | | |
| 7 | VCCO_7 | | N22 | | | |
| 7 | VCCO_7 | | N21 | | | |
| 7 | VCCO_7 | | M22 | | | |
| 7 | VCCO_7 | | M21 | | | |
| 7 | VCCO_7 | | L22 | | | |
| 7 | VCCO_7 | | L21 | | | |
| 7 | VCCO_7 | | K22 | | | |
| 7 | VCCO_7 | | J22 | | | |
| | | | | | | |
| N/A | CCLK | | AC7 | | | |
| N/A | PROG_B | | G24 | | | |
| N/A | DONE | | AC8 | | | |

*Table 9:* **FF896 — XC2VP7, XC2VP20, XC2VPX20, and XC2VP30**

| Bank | Pin Description | | Pin Number | No Connects | | |
|---|---|---|---|---|---|---|
| | Virtex-II Pro devices | XC2VPX20 (if Different) | | XC2VP7 | XC2VP20, XC2VPX20 | XC2VP30 |
| N/A | M0 | | AD24 | | | |
| N/A | M1 | | AC24 | | | |
| N/A | M2 | | AC23 | | | |
| N/A | TCK | | G7 | | | |
| N/A | TDI | | F26 | | | |
| N/A | TDO | | F5 | | | |
| N/A | TMS | | H8 | | | |
| N/A | PWRDWN_B | | AD7 | | | |
| N/A | HSWAP_EN | | H23 | | | |
| N/A | RSVD | | D6 | | | |
| N/A | VBATT | | H7 | | | |
| N/A | DXP | | H24 | | | |
| N/A | DXN | | D25 | | | |
| N/A | AVCCAUXTX4 | | B26 | | | |
| N/A | VTTXPAD4 | | B27 | | | |
| N/A | TXNPAD4 | | A27 | | | |
| N/A | TXPPAD4 | | A26 | | | |
| N/A | GNDA4 | | C25 | | | |
| N/A | RXPPAD4 | | A25 | | | |
| N/A | RXNPAD4 | | A24 | | | |
| N/A | VTRXPAD4 | | B25 | | | |
| N/A | AVCCAUXRX4 | | B24 | | | |
| N/A | AVCCAUXTX6 | | B19 | | | |
| N/A | VTTXPAD6 | | B20 | | | |
| N/A | TXNPAD6 | | A20 | | | |
| N/A | TXPPAD6 | | A19 | | | |
| N/A | GNDA6 | | C19 | | | |
| N/A | RXPPAD6 | | A18 | | | |
| N/A | RXNPAD6 | | A17 | | | |
| N/A | VTRXPAD6 | | B18 | | | |
| N/A | AVCCAUXRX6 | | B17 | | | |
| N/A | AVCCAUXTX7 | | B13 | | | |
| N/A | VTTXPAD7 | | B14 | | | |
| N/A | TXNPAD7 | | A14 | | | |
| N/A | TXPPAD7 | | A13 | | | |
| N/A | GNDA7 | | C12 | | | |

*Table 9:* **FF896 — XC2VP7, XC2VP20, XC2VPX20, and XC2VP30**

| Bank | Pin Description | | Pin Number | No Connects | | |
|---|---|---|---|---|---|---|
| | Virtex-II Pro devices | XC2VPX20 (if Different) | | XC2VP7 | XC2VP20, XC2VPX20 | XC2VP30 |
| N/A | RXPPAD7 | | A12 | | | |
| N/A | RXNPAD7 | | A11 | | | |
| N/A | VTRXPAD7 | | B12 | | | |
| N/A | AVCCAUXRX7 | | B11 | | | |
| N/A | AVCCAUXTX9 | | B6 | | | |
| N/A | VTTXPAD9 | | B7 | | | |
| N/A | TXNPAD9 | | A7 | | | |
| N/A | TXPPAD9 | | A6 | | | |
| N/A | GNDA9 | | C6 | | | |
| N/A | RXPPAD9 | | A5 | | | |
| N/A | RXNPAD9 | | A4 | | | |
| N/A | VTRXPAD9 | | B5 | | | |
| N/A | AVCCAUXRX9 | | B4 | | | |
| N/A | AVCCAUXRX16 | | AJ4 | | | |
| N/A | VTRXPAD16 | | AJ5 | | | |
| N/A | RXNPAD16 | | AK4 | | | |
| N/A | RXPPAD16 | | AK5 | | | |
| N/A | GNDA16 | | AH6 | | | |
| N/A | TXPPAD16 | | AK6 | | | |
| N/A | TXNPAD16 | | AK7 | | | |
| N/A | VTTXPAD16 | | AJ7 | | | |
| N/A | AVCCAUXTX16 | | AJ6 | | | |
| N/A | AVCCAUXRX18 | | AJ11 | | | |
| N/A | VTRXPAD18 | | AJ12 | | | |
| N/A | RXNPAD18 | | AK11 | | | |
| N/A | RXPPAD18 | | AK12 | | | |
| N/A | GNDA18 | | AH12 | | | |
| N/A | TXPPAD18 | | AK13 | | | |
| N/A | TXNPAD18 | | AK14 | | | |
| N/A | VTTXPAD18 | | AJ14 | | | |
| N/A | AVCCAUXTX18 | | AJ13 | | | |
| N/A | AVCCAUXRX19 | | AJ17 | | | |
| N/A | VTRXPAD19 | | AJ18 | | | |
| N/A | RXNPAD19 | | AK17 | | | |
| N/A | RXPPAD19 | | AK18 | | | |
| N/A | GNDA19 | | AH19 | | | |

*Table 9:* **FF896 — XC2VP7, XC2VP20, XC2VPX20, and XC2VP30**

| Bank | Pin Description | | Pin Number | No Connects | | |
|---|---|---|---|---|---|---|
| | Virtex-II Pro devices | XC2VPX20 (if Different) | | XC2VP7 | XC2VP20, XC2VPX20 | XC2VP30 |
| N/A | TXPPAD19 | | AK19 | | | |
| N/A | TXNPAD19 | | AK20 | | | |
| N/A | VTTXPAD19 | | AJ20 | | | |
| N/A | AVCCAUXTX19 | | AJ19 | | | |
| N/A | AVCCAUXRX21 | | AJ24 | | | |
| N/A | VTRXPAD21 | | AJ25 | | | |
| N/A | RXNPAD21 | | AK24 | | | |
| N/A | RXPPAD21 | | AK25 | | | |
| N/A | GNDA21 | | AH25 | | | |
| N/A | TXPPAD21 | | AK26 | | | |
| N/A | TXNPAD21 | | AK27 | | | |
| N/A | VTTXPAD21 | | AJ27 | | | |
| N/A | AVCCAUXTX21 | | AJ26 | | | |
| | | | | | | |
| N/A | VCCAUX | | AK29 | | | |
| N/A | VCCAUX | | AK16 | | | |
| N/A | VCCAUX | | AK15 | | | |
| N/A | VCCAUX | | AK2 | | | |
| N/A | VCCAUX | | AJ30 | | | |
| N/A | VCCAUX | | AJ1 | | | |
| N/A | VCCAUX | | T30 | | | |
| N/A | VCCAUX | | T1 | | | |
| N/A | VCCAUX | | R30 | | | |
| N/A | VCCAUX | | R1 | | | |
| N/A | VCCAUX | | B30 | | | |
| N/A | VCCAUX | | B1 | | | |
| N/A | VCCAUX | | A29 | | | |
| N/A | VCCAUX | | A16 | | | |
| N/A | VCCAUX | | A15 | | | |
| N/A | VCCAUX | | A2 | | | |
| N/A | VCCINT | | Y19 | | | |
| N/A | VCCINT | | Y18 | | | |
| N/A | VCCINT | | Y17 | | | |
| N/A | VCCINT | | Y16 | | | |
| N/A | VCCINT | | Y15 | | | |
| N/A | VCCINT | | Y14 | | | |

*Table 9:* **FF896 — XC2VP7, XC2VP20, XC2VPX20, and XC2VP30**

| Bank | Pin Description | | Pin Number | No Connects | | |
|---|---|---|---|---|---|---|
| | Virtex-II Pro devices | XC2VPX20 (if Different) | | XC2VP7 | XC2VP20, XC2VPX20 | XC2VP30 |
| N/A | VCCINT | | Y13 | | | |
| N/A | VCCINT | | Y12 | | | |
| N/A | VCCINT | | W20 | | | |
| N/A | VCCINT | | W11 | | | |
| N/A | VCCINT | | V20 | | | |
| N/A | VCCINT | | V11 | | | |
| N/A | VCCINT | | U20 | | | |
| N/A | VCCINT | | U11 | | | |
| N/A | VCCINT | | T20 | | | |
| N/A | VCCINT | | T11 | | | |
| N/A | VCCINT | | R20 | | | |
| N/A | VCCINT | | R11 | | | |
| N/A | VCCINT | | P20 | | | |
| N/A | VCCINT | | P11 | | | |
| N/A | VCCINT | | N20 | | | |
| N/A | VCCINT | | N11 | | | |
| N/A | VCCINT | | M20 | | | |
| N/A | VCCINT | | M11 | | | |
| N/A | VCCINT | | L19 | | | |
| N/A | VCCINT | | L18 | | | |
| N/A | VCCINT | | L17 | | | |
| N/A | VCCINT | | L16 | | | |
| N/A | VCCINT | | L15 | | | |
| N/A | VCCINT | | L14 | | | |
| N/A | VCCINT | | L13 | | | |
| N/A | VCCINT | | L12 | | | |
| N/A | GND | | AK22 | | | |
| N/A | GND | | AK9 | | | |
| N/A | GND | | AJ29 | | | |
| N/A | GND | | AJ2 | | | |
| N/A | GND | | AH28 | | | |
| N/A | GND | | AH17 | | | |
| N/A | GND | | AH14 | | | |
| N/A | GND | | AH3 | | | |
| N/A | GND | | AG27 | | | |
| N/A | GND | | AG22 | | | |

*Table 9:* **FF896 — XC2VP7, XC2VP20, XC2VPX20, and XC2VP30**

| Bank | Pin Description | | Pin Number | No Connects | | |
|---|---|---|---|---|---|---|
| | Virtex-II Pro devices | XC2VPX20 (if Different) | | XC2VP7 | XC2VP20, XC2VPX20 | XC2VP30 |
| N/A | GND | | AG19 | | | |
| N/A | GND | | AG12 | | | |
| N/A | GND | | AG9 | | | |
| N/A | GND | | AG4 | | | |
| N/A | GND | | AF26 | | | |
| N/A | GND | | AF5 | | | |
| N/A | GND | | AE25 | | | |
| N/A | GND | | AE18 | | | |
| N/A | GND | | AE13 | | | |
| N/A | GND | | AE6 | | | |
| N/A | GND | | AC30 | | | |
| N/A | GND | | AC1 | | | |
| N/A | GND | | Y28 | | | |
| N/A | GND | | Y25 | | | |
| N/A | GND | | Y20 | | | |
| N/A | GND | | Y11 | | | |
| N/A | GND | | Y6 | | | |
| N/A | GND | | Y3 | | | |
| N/A | GND | | W19 | | | |
| N/A | GND | | W18 | | | |
| N/A | GND | | W17 | | | |
| N/A | GND | | W16 | | | |
| N/A | GND | | W15 | | | |
| N/A | GND | | W14 | | | |
| N/A | GND | | W13 | | | |
| N/A | GND | | W12 | | | |
| N/A | GND | | V19 | | | |
| N/A | GND | | V18 | | | |
| N/A | GND | | V17 | | | |
| N/A | GND | | V16 | | | |
| N/A | GND | | V15 | | | |
| N/A | GND | | V14 | | | |
| N/A | GND | | V13 | | | |
| N/A | GND | | V12 | | | |
| N/A | GND | | U25 | | | |
| N/A | GND | | U19 | | | |

*Table 9:* **FF896 — XC2VP7, XC2VP20, XC2VPX20, and XC2VP30**

| Bank | Pin Description | | Pin Number | No Connects | | |
|---|---|---|---|---|---|---|
| | Virtex-II Pro devices | XC2VPX20 (if Different) | | XC2VP7 | XC2VP20, XC2VPX20 | XC2VP30 |
| N/A | GND | | U18 | | | |
| N/A | GND | | U17 | | | |
| N/A | GND | | U16 | | | |
| N/A | GND | | U15 | | | |
| N/A | GND | | U14 | | | |
| N/A | GND | | U13 | | | |
| N/A | GND | | U12 | | | |
| N/A | GND | | U6 | | | |
| N/A | GND | | T19 | | | |
| N/A | GND | | T18 | | | |
| N/A | GND | | T17 | | | |
| N/A | GND | | T16 | | | |
| N/A | GND | | T15 | | | |
| N/A | GND | | T14 | | | |
| N/A | GND | | T13 | | | |
| N/A | GND | | T12 | | | |
| N/A | GND | | R19 | | | |
| N/A | GND | | R18 | | | |
| N/A | GND | | R17 | | | |
| N/A | GND | | R16 | | | |
| N/A | GND | | R15 | | | |
| N/A | GND | | R14 | | | |
| N/A | GND | | R13 | | | |
| N/A | GND | | R12 | | | |
| N/A | GND | | P25 | | | |
| N/A | GND | | P19 | | | |
| N/A | GND | | P18 | | | |
| N/A | GND | | P17 | | | |
| N/A | GND | | P16 | | | |
| N/A | GND | | P15 | | | |
| N/A | GND | | P14 | | | |
| N/A | GND | | P13 | | | |
| N/A | GND | | P12 | | | |
| N/A | GND | | P6 | | | |
| N/A | GND | | N19 | | | |
| N/A | GND | | N18 | | | |

*Table 9:* **FF896 — XC2VP7, XC2VP20, XC2VPX20, and XC2VP30**

| Bank | Pin Description | | Pin Number | No Connects | | |
|---|---|---|---|---|---|---|
| | Virtex-II Pro devices | XC2VPX20 (if Different) | | XC2VP7 | XC2VP20, XC2VPX20 | XC2VP30 |
| N/A | GND | | N17 | | | |
| N/A | GND | | N16 | | | |
| N/A | GND | | N15 | | | |
| N/A | GND | | N14 | | | |
| N/A | GND | | N13 | | | |
| N/A | GND | | N12 | | | |
| N/A | GND | | M19 | | | |
| N/A | GND | | M18 | | | |
| N/A | GND | | M17 | | | |
| N/A | GND | | M16 | | | |
| N/A | GND | | M15 | | | |
| N/A | GND | | M14 | | | |
| N/A | GND | | M13 | | | |
| N/A | GND | | M12 | | | |
| N/A | GND | | L28 | | | |
| N/A | GND | | L25 | | | |
| N/A | GND | | L20 | | | |
| N/A | GND | | L11 | | | |
| N/A | GND | | L6 | | | |
| N/A | GND | | L3 | | | |
| N/A | GND | | H30 | | | |
| N/A | GND | | H1 | | | |
| N/A | GND | | F25 | | | |
| N/A | GND | | F18 | | | |
| N/A | GND | | F13 | | | |
| N/A | GND | | F6 | | | |
| N/A | GND | | E26 | | | |
| N/A | GND | | E5 | | | |
| N/A | GND | | D27 | | | |
| N/A | GND | | D22 | | | |
| N/A | GND | | D19 | | | |
| N/A | GND | | D12 | | | |
| N/A | GND | | D9 | | | |
| N/A | GND | | D4 | | | |
| N/A | GND | | C28 | | | |
| N/A | GND | | C17 | | | |

*Table 9:* **FF896 — XC2VP7, XC2VP20, XC2VPX20, and XC2VP30**

| Bank | Pin Description | | Pin Number | No Connects | | |
|---|---|---|---|---|---|---|
| | Virtex-II Pro devices | XC2VPX20 (if Different) | | XC2VP7 | XC2VP20, XC2VPX20 | XC2VP30 |
| N/A | GND | | C14 | | | |
| N/A | GND | | C3 | | | |
| N/A | GND | | B29 | | | |
| N/A | GND | | B2 | | | |
| N/A | GND | | A22 | | | |
| N/A | GND | | A9 | | | |

**Notes:**
1. See Table 4 for an explanation of the signals available on this pin.

## FF896 Flip-Chip Fine-Pitch BGA Package Specifications (1.00mm pitch)

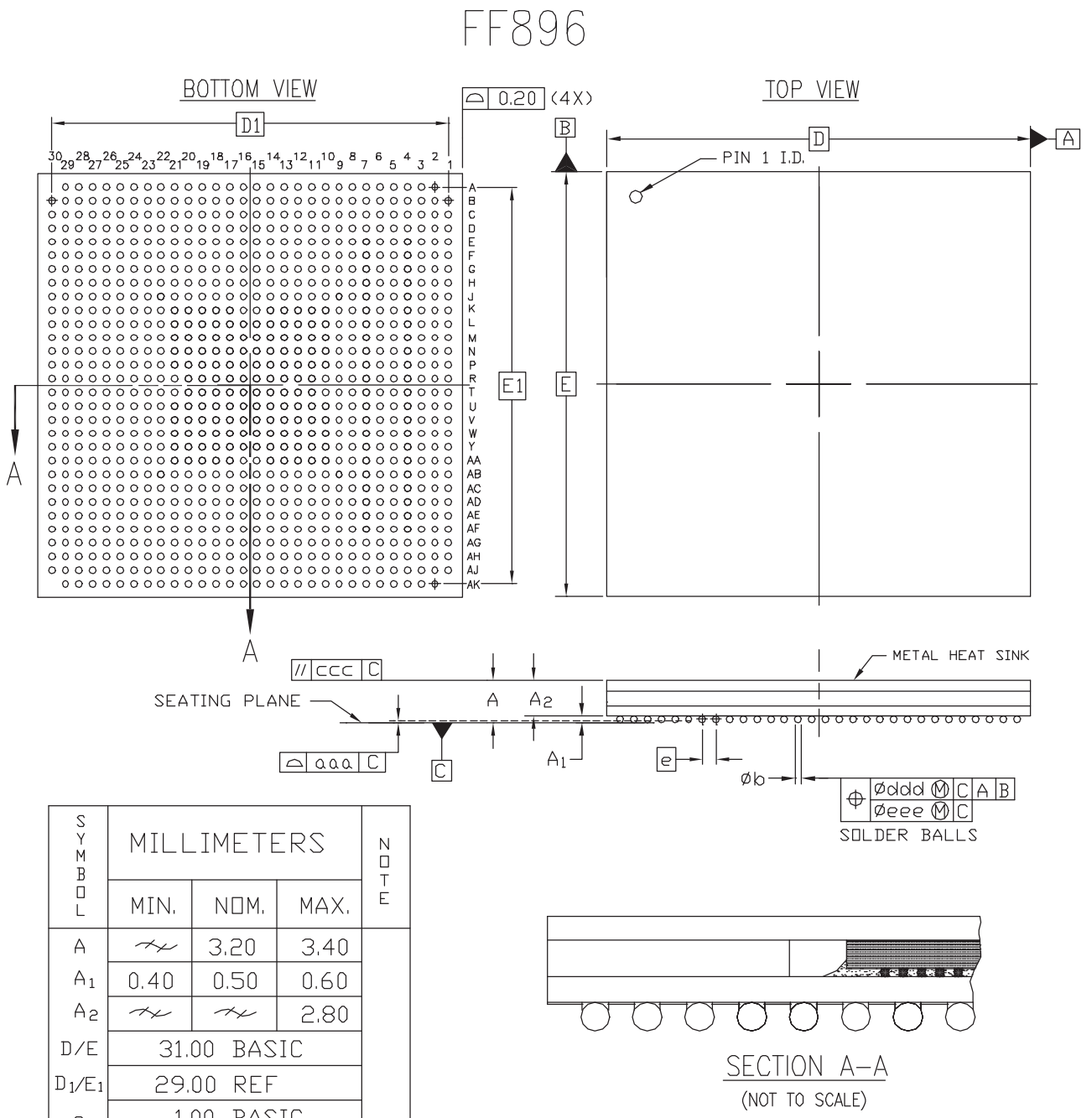


| SYMBOL | MILLIMETERS | | | NOTE |
|---|---|---|---|---|
| | MIN. | NOM. | MAX. | |
| A | — | 3.20 | 3.40 | |
| $A_1$ | 0.40 | 0.50 | 0.60 | |
| $A_2$ | — | — | 2.80 | |
| D/E | 31.00 BASIC | | | |
| $D_1/E_1$ | 29.00 REF | | | |
| e | 1.00 BASIC | | | |
| Øb | 0.50 | 0.60 | 0.70 | |
| aaa | — | — | 0.20 | |
| ccc | — | — | 0.35 | |
| ddd | — | — | 0.30 | |
| eee | — | — | 0.10 | |
| M | 30 | | | 2 |

NOTES:

1. ALL DIMENSIONS AND TOLERANCES CONFORM TO ANSI Y14.5M–1994
2. SYMBOL 'M' IS THE BALL MATRIX SIZE.
3. CONFORMS TO JEDEC MS–034–AAN–1 (DEPOPULATED)

*Figure 5:* **FF896 Flip-Chip Fine-Pitch BGA Package Specifications**

## FF1152 Flip-Chip Fine-Pitch BGA Package

As shown in Table 10, XC2VP20, XC2VP30, XC2VP40, and XC2VP50 Virtex-II Pro devices are available in the FF1152 flip-chip fine-pitch BGA package. Pins in each of these devices are the same, except for the differences shown in the No Connect column. Following this table are the FF1152 Flip-Chip Fine-Pitch BGA Package Specifications (1.00mm pitch).

*Table 10:* **FF1152 — XC2VP20, XC2VP30, XC2VP40, and XC2VP50**

| Bank | Pin Description | Pin Number | No Connects | | | |
|---|---|---|---|---|---|---|
| | | | XC2VP20 | XC2VP30 | XC2VP40 | XC2VP50 |
| 0 | IO_L01N_0/VRP_0 | E29 | | | | |
| 0 | IO_L01P_0/VRN_0 | E28 | | | | |
| 0 | IO_L02N_0 | H26 | | | | |
| 0 | IO_L02P_0 | G26 | | | | |
| 0 | IO_L03N_0 | H25 | | | | |
| 0 | IO_L03P_0/VREF_0 | G25 | | | | |
| 0 | IO_L05_0/No_Pair | J25 | | | | |
| 0 | IO_L06N_0 | K24 | | | | |
| 0 | IO_L06P_0 | J24 | | | | |
| 0 | IO_L07N_0 | F26 | | | | |
| 0 | IO_L07P_0 | E26 | | | | |
| 0 | IO_L08N_0 | D30 | | | | |
| 0 | IO_L08P_0 | D29 | | | | |
| 0 | IO_L09N_0 | K23 | | | | |
| 0 | IO_L09P_0/VREF_0 | J23 | | | | |
| 0 | IO_L19N_0 | F24 | NC | NC | | |
| 0 | IO_L19P_0 | E24 | NC | NC | | |
| 0 | IO_L20N_0 | D28 | NC | NC | | |
| 0 | IO_L20P_0 | C28 | NC | NC | | |
| 0 | IO_L21N_0 | H24 | NC | NC | | |
| 0 | IO_L21P_0 | G24 | NC | NC | | |
| 0 | IO_L25N_0 | G23 | NC | NC | | |
| 0 | IO_L25P_0 | F23 | NC | NC | | |
| 0 | IO_L26N_0 | E27 | NC | NC | | |
| 0 | IO_L26P_0 | D27 | NC | NC | | |
| 0 | IO_L27N_0 | K22 | NC | NC | | |
| 0 | IO_L27P_0/VREF_0 | J22 | NC | NC | | |
| 0 | IO_L37N_0 | H22 | | | | |
| 0 | IO_L37P_0 | G22 | | | | |
| 0 | IO_L38N_0 | D26 | | | | |
| 0 | IO_L38P_0 | C26 | | | | |
| 0 | IO_L39N_0 | K21 | | | | |
| 0 | IO_L39P_0 | J21 | | | | |
| 0 | IO_L43N_0 | F22 | | | | |

*Table 10:* **FF1152 — XC2VP20, XC2VP30, XC2VP40, and XC2VP50**

| Bank | Pin Description | Pin Number | No Connects | | | |
|---|---|---|---|---|---|---|
| | | | XC2VP20 | XC2VP30 | XC2VP40 | XC2VP50 |
| 0 | IO_L43P_0 | E22 | | | | |
| 0 | IO_L44N_0 | E25 | | | | |
| 0 | IO_L44P_0 | D25 | | | | |
| 0 | IO_L45N_0 | H21 | | | | |
| 0 | IO_L45P_0/VREF_0 | G21 | | | | |
| 0 | IO_L46N_0 | D22 | | | | |
| 0 | IO_L46P_0 | D23 | | | | |
| 0 | IO_L47N_0 | D24 | | | | |
| 0 | IO_L47P_0 | C24 | | | | |
| 0 | IO_L48N_0 | K20 | | | | |
| 0 | IO_L48P_0 | J20 | | | | |
| 0 | IO_L49N_0 | F21 | | | | |
| 0 | IO_L49P_0 | E21 | | | | |
| 0 | IO_L50_0/No_Pair | C21 | | | | |
| 0 | IO_L53_0/No_Pair | C22 | | | | |
| 0 | IO_L54N_0 | L19 | | | | |
| 0 | IO_L54P_0 | K19 | | | | |
| 0 | IO_L55N_0 | G20 | | | | |
| 0 | IO_L55P_0 | F20 | | | | |
| 0 | IO_L56N_0 | D21 | | | | |
| 0 | IO_L56P_0 | D20 | | | | |
| 0 | IO_L57N_0 | J19 | | | | |
| 0 | IO_L57P_0/VREF_0 | H19 | | | | |
| 0 | IO_L67N_0 | G19 | | | | |
| 0 | IO_L67P_0 | F19 | | | | |
| 0 | IO_L68N_0 | E19 | | | | |
| 0 | IO_L68P_0 | D19 | | | | |
| 0 | IO_L69N_0 | L18 | | | | |
| 0 | IO_L69P_0/VREF_0 | K18 | | | | |
| 0 | IO_L73N_0 | G18 | | | | |
| 0 | IO_L73P_0 | F18 | | | | |
| 0 | IO_L74N_0/GCLK7P | E18 | | | | |
| 0 | IO_L74P_0/GCLK6S | D18 | | | | |
| 0 | IO_L75N_0/GCLK5P | J18 | | | | |
| 0 | IO_L75P_0/GCLK4S | H18 | | | | |
| | | | | | | |
| 1 | IO_L75N_1/GCLK3P | H17 | | | | |
| 1 | IO_L75P_1/GCLK2S | J17 | | | | |

*Table 10:* **FF1152 — XC2VP20, XC2VP30, XC2VP40, and XC2VP50**

| Bank | Pin Description | Pin Number | No Connects | | | |
|---|---|---|---|---|---|---|
| | | | XC2VP20 | XC2VP30 | XC2VP40 | XC2VP50 |
| 1 | IO_L74N_1/GCLK1P | D17 | | | | |
| 1 | IO_L74P_1/GCLK0S | E17 | | | | |
| 1 | IO_L73N_1 | F17 | | | | |
| 1 | IO_L73P_1 | G17 | | | | |
| 1 | IO_L69N_1/VREF_1 | K17 | | | | |
| 1 | IO_L69P_1 | L17 | | | | |
| 1 | IO_L68N_1 | D16 | | | | |
| 1 | IO_L68P_1 | E16 | | | | |
| 1 | IO_L67N_1 | F16 | | | | |
| 1 | IO_L67P_1 | G16 | | | | |
| 1 | IO_L57N_1/VREF_1 | H16 | | | | |
| 1 | IO_L57P_1 | J16 | | | | |
| 1 | IO_L56N_1 | D15 | | | | |
| 1 | IO_L56P_1 | D14 | | | | |
| 1 | IO_L55N_1 | F15 | | | | |
| 1 | IO_L55P_1 | G15 | | | | |
| 1 | IO_L54N_1 | K16 | | | | |
| 1 | IO_L54P_1 | L16 | | | | |
| 1 | IO_L53_1/No_Pair | C13 | | | | |
| 1 | IO_L50_1/No_Pair | C14 | | | | |
| 1 | IO_L49N_1 | E14 | | | | |
| 1 | IO_L49P_1 | F14 | | | | |
| 1 | IO_L48N_1 | J15 | | | | |
| 1 | IO_L48P_1 | K15 | | | | |
| 1 | IO_L47N_1 | C11 | | | | |
| 1 | IO_L47P_1 | D11 | | | | |
| 1 | IO_L46N_1 | D12 | | | | |
| 1 | IO_L46P_1 | D13 | | | | |
| 1 | IO_L45N_1/VREF_1 | G14 | | | | |
| 1 | IO_L45P_1 | H14 | | | | |
| 1 | IO_L44N_1 | D10 | | | | |
| 1 | IO_L44P_1 | E10 | | | | |
| 1 | IO_L43N_1 | E13 | | | | |
| 1 | IO_L43P_1 | F13 | | | | |
| 1 | IO_L39N_1 | J14 | | | | |
| 1 | IO_L39P_1 | K14 | | | | |
| 1 | IO_L38N_1 | C9 | | | | |
| 1 | IO_L38P_1 | D9 | | | | |

*Table 10:* **FF1152 — XC2VP20, XC2VP30, XC2VP40, and XC2VP50**

| Bank | Pin Description | Pin Number | No Connects | | | |
|---|---|---|---|---|---|---|
| | | | XC2VP20 | XC2VP30 | XC2VP40 | XC2VP50 |
| 1 | IO_L37N_1 | G13 | | | | |
| 1 | IO_L37P_1 | H13 | | | | |
| 1 | IO_L27N_1/VREF_1 | J13 | NC | NC | | |
| 1 | IO_L27P_1 | K13 | NC | NC | | |
| 1 | IO_L26N_1 | D8 | NC | NC | | |
| 1 | IO_L26P_1 | E8 | NC | NC | | |
| 1 | IO_L25N_1 | F12 | NC | NC | | |
| 1 | IO_L25P_1 | G12 | NC | NC | | |
| 1 | IO_L21N_1 | G11 | NC | NC | | |
| 1 | IO_L21P_1 | H11 | NC | NC | | |
| 1 | IO_L20N_1 | C7 | NC | NC | | |
| 1 | IO_L20P_1 | D7 | NC | NC | | |
| 1 | IO_L19N_1 | E11 | NC | NC | | |
| 1 | IO_L19P_1 | F11 | NC | NC | | |
| 1 | IO_L09N_1/VREF_1 | J12 | | | | |
| 1 | IO_L09P_1 | K12 | | | | |
| 1 | IO_L08N_1 | D6 | | | | |
| 1 | IO_L08P_1 | D5 | | | | |
| 1 | IO_L07N_1 | E9 | | | | |
| 1 | IO_L07P_1 | F9 | | | | |
| 1 | IO_L06N_1 | J11 | | | | |
| 1 | IO_L06P_1 | K11 | | | | |
| 1 | IO_L05_1/No_Pair | J10 | | | | |
| 1 | IO_L03N_1/VREF_1 | G10 | | | | |
| 1 | IO_L03P_1 | H10 | | | | |
| 1 | IO_L02N_1 | G9 | | | | |
| 1 | IO_L02P_1 | H9 | | | | |
| 1 | IO_L01N_1/VRP_1 | E7 | | | | |
| 1 | IO_L01P_1/VRN_1 | E6 | | | | |
| | | | | | | |
| 2 | IO_L01N_2/VRP_2 | D2 | | | | |
| 2 | IO_L01P_2/VRN_2 | D1 | | | | |
| 2 | IO_L02N_2 | F8 | | | | |
| 2 | IO_L02P_2 | F7 | | | | |
| 2 | IO_L03N_2 | E4 | | | | |
| 2 | IO_L03P_2 | E3 | | | | |
| 2 | IO_L04N_2/VREF_2 | E2 | | | | |
| 2 | IO_L04P_2 | E1 | | | | |

*Table 10:* **FF1152 — XC2VP20, XC2VP30, XC2VP40, and XC2VP50**

| Bank | Pin Description | Pin Number | No Connects | | | |
|---|---|---|---|---|---|---|
| | | | XC2VP20 | XC2VP30 | XC2VP40 | XC2VP50 |
| 2 | IO_L05N_2 | J8 | | | | |
| 2 | IO_L05P_2 | J7 | | | | |
| 2 | IO_L06N_2 | F5 | | | | |
| 2 | IO_L06P_2 | F4 | | | | |
| 2 | IO_L15N_2 | G4 | NC | | | |
| 2 | IO_L15P_2 | G3 | NC | | | |
| 2 | IO_L16N_2/VREF_2 | G6 | NC | | | |
| 2 | IO_L16P_2 | G5 | NC | | | |
| 2 | IO_L17N_2 | F2 | NC | | | |
| 2 | IO_L17P_2 | F1 | NC | | | |
| 2 | IO_L18N_2 | L10 | NC | | | |
| 2 | IO_L18P_2 | L9 | NC | | | |
| 2 | IO_L19N_2 | H6 | NC | | | |
| 2 | IO_L19P_2 | H5 | NC | | | |
| 2 | IO_L20N_2 | G2 | NC | | | |
| 2 | IO_L20P_2 | G1 | NC | | | |
| 2 | IO_L21N_2 | J6 | NC | | | |
| 2 | IO_L21P_2 | J5 | NC | | | |
| 2 | IO_L22N_2/VREF_2 | J4 | NC | | | |
| 2 | IO_L22P_2 | J3 | NC | | | |
| 2 | IO_L23N_2 | K8 | NC | | | |
| 2 | IO_L23P_2 | K7 | NC | | | |
| 2 | IO_L24N_2 | H4 | NC | | | |
| 2 | IO_L24P_2 | H3 | NC | | | |
| 2 | IO_L31N_2 | H2 | | | | |
| 2 | IO_L31P_2 | H1 | | | | |
| 2 | IO_L32N_2 | M10 | | | | |
| 2 | IO_L32P_2 | M9 | | | | |
| 2 | IO_L33N_2 | K5 | | | | |
| 2 | IO_L33P_2 | K4 | | | | |
| 2 | IO_L34N_2/VREF_2 | J2 | | | | |
| 2 | IO_L34P_2 | K2 | | | | |
| 2 | IO_L35N_2 | L8 | | | | |
| 2 | IO_L35P_2 | L7 | | | | |
| 2 | IO_L36N_2 | L6 | | | | |
| 2 | IO_L36P_2 | L5 | | | | |
| 2 | IO_L37N_2 | K1 | | | | |
| 2 | IO_L37P_2 | L1 | | | | |

*Table 10:* **FF1152 — XC2VP20, XC2VP30, XC2VP40, and XC2VP50**

| Bank | Pin Description | Pin Number | No Connects | | | |
|---|---|---|---|---|---|---|
| | | | XC2VP20 | XC2VP30 | XC2VP40 | XC2VP50 |
| 2 | IO_L38N_2 | N10 | | | | |
| 2 | IO_L38P_2 | N9 | | | | |
| 2 | IO_L39N_2 | M7 | | | | |
| 2 | IO_L39P_2 | M6 | | | | |
| 2 | IO_L40N_2/VREF_2 | L2 | | | | |
| 2 | IO_L40P_2 | M2 | | | | |
| 2 | IO_L41N_2 | N8 | | | | |
| 2 | IO_L41P_2 | N7 | | | | |
| 2 | IO_L42N_2 | L4 | | | | |
| 2 | IO_L42P_2 | L3 | | | | |
| 2 | IO_L43N_2 | M4 | | | | |
| 2 | IO_L43P_2 | M3 | | | | |
| 2 | IO_L44N_2 | P10 | | | | |
| 2 | IO_L44P_2 | P9 | | | | |
| 2 | IO_L45N_2 | N6 | | | | |
| 2 | IO_L45P_2 | N5 | | | | |
| 2 | IO_L46N_2/VREF_2 | M1 | | | | |
| 2 | IO_L46P_2 | N1 | | | | |
| 2 | IO_L47N_2 | P8 | | | | |
| 2 | IO_L47P_2 | P7 | | | | |
| 2 | IO_L48N_2 | N4 | | | | |
| 2 | IO_L48P_2 | N3 | | | | |
| 2 | IO_L49N_2 | N2 | | | | |
| 2 | IO_L49P_2 | P2 | | | | |
| 2 | IO_L50N_2 | R10 | | | | |
| 2 | IO_L50P_2 | R9 | | | | |
| 2 | IO_L51N_2 | P6 | | | | |
| 2 | IO_L51P_2 | P5 | | | | |
| 2 | IO_L52N_2/VREF_2 | P4 | | | | |
| 2 | IO_L52P_2 | P3 | | | | |
| 2 | IO_L53N_2 | T11 | | | | |
| 2 | IO_L53P_2 | U11 | | | | |
| 2 | IO_L54N_2 | R7 | | | | |
| 2 | IO_L54P_2 | R6 | | | | |
| 2 | IO_L55N_2 | P1 | | | | |
| 2 | IO_L55P_2 | R1 | | | | |
| 2 | IO_L56N_2 | T10 | | | | |
| 2 | IO_L56P_2 | T9 | | | | |

*Table 10:* **FF1152 — XC2VP20, XC2VP30, XC2VP40, and XC2VP50**

| Bank | Pin Description | Pin Number | No Connects | | | |
|---|---|---|---|---|---|---|
| | | | XC2VP20 | XC2VP30 | XC2VP40 | XC2VP50 |
| 2 | IO_L57N_2 | R4 | | | | |
| 2 | IO_L57P_2 | R3 | | | | |
| 2 | IO_L58N_2/VREF_2 | R2 | | | | |
| 2 | IO_L58P_2 | T2 | | | | |
| 2 | IO_L59N_2 | T8 | | | | |
| 2 | IO_L59P_2 | T7 | | | | |
| 2 | IO_L60N_2 | T6 | | | | |
| 2 | IO_L60P_2 | T5 | | | | |
| 2 | IO_L85N_2 | T4 | | | | |
| 2 | IO_L85P_2 | T3 | | | | |
| 2 | IO_L86N_2 | U10 | | | | |
| 2 | IO_L86P_2 | U9 | | | | |
| 2 | IO_L87N_2 | U6 | | | | |
| 2 | IO_L87P_2 | U5 | | | | |
| 2 | IO_L88N_2/VREF_2 | U2 | | | | |
| 2 | IO_L88P_2 | V2 | | | | |
| 2 | IO_L89N_2 | U8 | | | | |
| 2 | IO_L89P_2 | U7 | | | | |
| 2 | IO_L90N_2 | U4 | | | | |
| 2 | IO_L90P_2 | U3 | | | | |
| | | | | | | |
| 3 | IO_L90N_3 | V3 | | | | |
| 3 | IO_L90P_3 | V4 | | | | |
| 3 | IO_L89N_3 | V7 | | | | |
| 3 | IO_L89P_3 | V8 | | | | |
| 3 | IO_L88N_3 | V5 | | | | |
| 3 | IO_L88P_3 | V6 | | | | |
| 3 | IO_L87N_3/VREF_3 | W2 | | | | |
| 3 | IO_L87P_3 | Y2 | | | | |
| 3 | IO_L86N_3 | V9 | | | | |
| 3 | IO_L86P_3 | V10 | | | | |
| 3 | IO_L85N_3 | W3 | | | | |
| 3 | IO_L85P_3 | W4 | | | | |
| 3 | IO_L60N_3 | Y1 | | | | |
| 3 | IO_L60P_3 | AA1 | | | | |
| 3 | IO_L59N_3 | V11 | | | | |
| 3 | IO_L59P_3 | W11 | | | | |
| 3 | IO_L58N_3 | W5 | | | | |

*Table 10:* **FF1152 — XC2VP20, XC2VP30, XC2VP40, and XC2VP50**

| Bank | Pin Description | Pin Number | No Connects | | | |
|---|---|---|---|---|---|---|
| | | | XC2VP20 | XC2VP30 | XC2VP40 | XC2VP50 |
| 3 | IO_L58P_3 | W6 | | | | |
| 3 | IO_L57N_3/VREF_3 | Y3 | | | | |
| 3 | IO_L57P_3 | Y4 | | | | |
| 3 | IO_L56N_3 | W7 | | | | |
| 3 | IO_L56P_3 | W8 | | | | |
| 3 | IO_L55N_3 | Y6 | | | | |
| 3 | IO_L55P_3 | Y7 | | | | |
| 3 | IO_L54N_3 | AA2 | | | | |
| 3 | IO_L54P_3 | AB2 | | | | |
| 3 | IO_L53N_3 | W9 | | | | |
| 3 | IO_L53P_3 | W10 | | | | |
| 3 | IO_L52N_3 | AA3 | | | | |
| 3 | IO_L52P_3 | AA4 | | | | |
| 3 | IO_L51N_3/VREF_3 | AB1 | | | | |
| 3 | IO_L51P_3 | AC1 | | | | |
| 3 | IO_L50N_3 | Y9 | | | | |
| 3 | IO_L50P_3 | Y10 | | | | |
| 3 | IO_L49N_3 | AA5 | | | | |
| 3 | IO_L49P_3 | AA6 | | | | |
| 3 | IO_L48N_3 | AB3 | | | | |
| 3 | IO_L48P_3 | AB4 | | | | |
| 3 | IO_L47N_3 | AA7 | | | | |
| 3 | IO_L47P_3 | AA8 | | | | |
| 3 | IO_L46N_3 | AB5 | | | | |
| 3 | IO_L46P_3 | AB6 | | | | |
| 3 | IO_L45N_3/VREF_3 | AC2 | | | | |
| 3 | IO_L45P_3 | AD2 | | | | |
| 3 | IO_L44N_3 | AA9 | | | | |
| 3 | IO_L44P_3 | AA10 | | | | |
| 3 | IO_L43N_3 | AC3 | | | | |
| 3 | IO_L43P_3 | AC4 | | | | |
| 3 | IO_L42N_3 | AD1 | | | | |
| 3 | IO_L42P_3 | AE1 | | | | |
| 3 | IO_L41N_3 | AB7 | | | | |
| 3 | IO_L41P_3 | AB8 | | | | |
| 3 | IO_L40N_3 | AC6 | | | | |
| 3 | IO_L40P_3 | AC7 | | | | |
| 3 | IO_L39N_3/VREF_3 | AD3 | | | | |

*Table 10:* **FF1152 — XC2VP20, XC2VP30, XC2VP40, and XC2VP50**

| Bank | Pin Description | Pin Number | No Connects | | | |
|---|---|---|---|---|---|---|
| | | | XC2VP20 | XC2VP30 | XC2VP40 | XC2VP50 |
| 3 | IO_L39P_3 | AD4 | | | | |
| 3 | IO_L38N_3 | AB9 | | | | |
| 3 | IO_L38P_3 | AB10 | | | | |
| 3 | IO_L37N_3 | AD5 | | | | |
| 3 | IO_L37P_3 | AD6 | | | | |
| 3 | IO_L36N_3 | AE2 | | | | |
| 3 | IO_L36P_3 | AF2 | | | | |
| 3 | IO_L35N_3 | AD7 | | | | |
| 3 | IO_L35P_3 | AD8 | | | | |
| 3 | IO_L34N_3 | AE4 | | | | |
| 3 | IO_L34P_3 | AE5 | | | | |
| 3 | IO_L33N_3/VREF_3 | AG1 | | | | |
| 3 | IO_L33P_3 | AG2 | | | | |
| 3 | IO_L32N_3 | AC9 | | | | |
| 3 | IO_L32P_3 | AC10 | | | | |
| 3 | IO_L31N_3 | AF3 | | | | |
| 3 | IO_L31P_3 | AF4 | | | | |
| 3 | IO_L24N_3 | AH1 | NC | | | |
| 3 | IO_L24P_3 | AH2 | NC | | | |
| 3 | IO_L23N_3 | AE7 | NC | | | |
| 3 | IO_L23P_3 | AE8 | NC | | | |
| 3 | IO_L22N_3 | AF5 | NC | | | |
| 3 | IO_L22P_3 | AF6 | NC | | | |
| 3 | IO_L21N_3/VREF_3 | AG3 | NC | | | |
| 3 | IO_L21P_3 | AG4 | NC | | | |
| 3 | IO_L20N_3 | AD9 | NC | | | |
| 3 | IO_L20P_3 | AD10 | NC | | | |
| 3 | IO_L19N_3 | AH3 | NC | | | |
| 3 | IO_L19P_3 | AH4 | NC | | | |
| 3 | IO_L18N_3 | AJ1 | NC | | | |
| 3 | IO_L18P_3 | AJ2 | NC | | | |
| 3 | IO_L17N_3 | AF7 | NC | | | |
| 3 | IO_L17P_3 | AF8 | NC | | | |
| 3 | IO_L16N_3 | AK1 | NC | | | |
| 3 | IO_L16P_3 | AK2 | NC | | | |
| 3 | IO_L15N_3/VREF_3 | AG5 | NC | | | |
| 3 | IO_L15P_3 | AG6 | NC | | | |
| 3 | IO_L06N_3 | AL1 | | | | |

*Table 10:* **FF1152 — XC2VP20, XC2VP30, XC2VP40, and XC2VP50**

| Bank | Pin Description | Pin Number | No Connects | | | |
|---|---|---|---|---|---|---|
| | | | XC2VP20 | XC2VP30 | XC2VP40 | XC2VP50 |
| 3 | IO_L06P_3 | AL2 | | | | |
| 3 | IO_L05N_3 | AG7 | | | | |
| 3 | IO_L05P_3 | AH8 | | | | |
| 3 | IO_L04N_3 | AH5 | | | | |
| 3 | IO_L04P_3 | AH6 | | | | |
| 3 | IO_L03N_3/VREF_3 | AK3 | | | | |
| 3 | IO_L03P_3 | AK4 | | | | |
| 3 | IO_L02N_3 | AJ7 | | | | |
| 3 | IO_L02P_3 | AJ8 | | | | |
| 3 | IO_L01N_3/VRP_3 | AJ4 | | | | |
| 3 | IO_L01P_3/VRN_3 | AJ5 | | | | |
| | | | | | | |
| 4 | IO_L01N_4/BUSY/DOUT(1) | AL5 | | | | |
| 4 | IO_L01P_4/INIT_B | AL6 | | | | |
| 4 | IO_L02N_4/D0/DIN(1) | AG9 | | | | |
| 4 | IO_L02P_4/D1 | AH9 | | | | |
| 4 | IO_L03N_4/D2 | AK6 | | | | |
| 4 | IO_L03P_4/D3 | AK7 | | | | |
| 4 | IO_L05_4/No_Pair | AF10 | | | | |
| 4 | IO_L06N_4/VRP_4 | AL7 | | | | |
| 4 | IO_L06P_4/VRN_4 | AM7 | | | | |
| 4 | IO_L07N_4 | AE11 | | | | |
| 4 | IO_L07P_4/VREF_4 | AF11 | | | | |
| 4 | IO_L08N_4 | AG10 | | | | |
| 4 | IO_L08P_4 | AH10 | | | | |
| 4 | IO_L09N_4 | AK8 | | | | |
| 4 | IO_L09P_4/VREF_4 | AL8 | | | | |
| 4 | IO_L19N_4 | AE12 | NC | NC | | |
| 4 | IO_L19P_4 | AF12 | NC | NC | | |
| 4 | IO_L20N_4 | AJ9 | NC | NC | | |
| 4 | IO_L20P_4 | AK9 | NC | NC | | |
| 4 | IO_L21N_4 | AL9 | NC | NC | | |
| 4 | IO_L21P_4 | AM9 | NC | NC | | |
| 4 | IO_L25N_4 | AG11 | NC | NC | | |
| 4 | IO_L25P_4 | AH11 | NC | NC | | |
| 4 | IO_L26N_4 | AH12 | NC | NC | | |
| 4 | IO_L26P_4 | AJ12 | NC | NC | | |
| 4 | IO_L27N_4 | AK10 | NC | NC | | |

*Table 10:* **FF1152 — XC2VP20, XC2VP30, XC2VP40, and XC2VP50**

| Bank | Pin Description | Pin Number | No Connects | | | |
|---|---|---|---|---|---|---|
| | | | XC2VP20 | XC2VP30 | XC2VP40 | XC2VP50 |
| 4 | IO_L27P_4/VREF_4 | AL10 | NC | NC | | |
| 4 | IO_L37N_4 | AE13 | | | | |
| 4 | IO_L37P_4 | AF13 | | | | |
| 4 | IO_L38N_4 | AG13 | | | | |
| 4 | IO_L38P_4 | AH13 | | | | |
| 4 | IO_L39N_4 | AJ11 | | | | |
| 4 | IO_L39P_4 | AK11 | | | | |
| 4 | IO_L43N_4 | AE14 | | | | |
| 4 | IO_L43P_4 | AF14 | | | | |
| 4 | IO_L44N_4 | AJ13 | | | | |
| 4 | IO_L44P_4 | AK13 | | | | |
| 4 | IO_L45N_4 | AL11 | | | | |
| 4 | IO_L45P_4/VREF_4 | AM11 | | | | |
| 4 | IO_L46N_4 | AE15 | | | | |
| 4 | IO_L46P_4 | AF15 | | | | |
| 4 | IO_L47N_4 | AG14 | | | | |
| 4 | IO_L47P_4 | AH14 | | | | |
| 4 | IO_L48N_4 | AL13 | | | | |
| 4 | IO_L48P_4 | AL12 | | | | |
| 4 | IO_L49N_4 | AD16 | | | | |
| 4 | IO_L49P_4 | AE16 | | | | |
| 4 | IO_L50_4/No_Pair | AJ14 | | | | |
| 4 | IO_L53_4/No_Pair | AK14 | | | | |
| 4 | IO_L54N_4 | AM14 | | | | |
| 4 | IO_L54P_4 | AM13 | | | | |
| 4 | IO_L55N_4 | AF16 | | | | |
| 4 | IO_L55P_4 | AG16 | | | | |
| 4 | IO_L56N_4 | AH15 | | | | |
| 4 | IO_L56P_4 | AJ15 | | | | |
| 4 | IO_L57N_4 | AL14 | | | | |
| 4 | IO_L57P_4/VREF_4 | AL15 | | | | |
| 4 | IO_L67N_4 | AD17 | | | | |
| 4 | IO_L67P_4 | AE17 | | | | |
| 4 | IO_L68N_4 | AH16 | | | | |
| 4 | IO_L68P_4 | AJ16 | | | | |
| 4 | IO_L69N_4 | AK16 | | | | |
| 4 | IO_L69P_4/VREF_4 | AL16 | | | | |
| 4 | IO_L73N_4 | AF17 | | | | |

*Table 10:* **FF1152 — XC2VP20, XC2VP30, XC2VP40, and XC2VP50**

| Bank | Pin Description | Pin Number | No Connects | | | |
|---|---|---|---|---|---|---|
| | | | XC2VP20 | XC2VP30 | XC2VP40 | XC2VP50 |
| 4 | IO_L73P_4 | AG17 | | | | |
| 4 | IO_L74N_4/GCLK3S | AH17 | | | | |
| 4 | IO_L74P_4/GCLK2P | AJ17 | | | | |
| 4 | IO_L75N_4/GCLK1S | AK17 | | | | |
| 4 | IO_L75P_4/GCLK0P | AL17 | | | | |
| | | | | | | |
| 5 | IO_L75N_5/GCLK7S | AL18 | | | | |
| 5 | IO_L75P_5/GCLK6P | AK18 | | | | |
| 5 | IO_L74N_5/GCLK5S | AJ18 | | | | |
| 5 | IO_L74P_5/GCLK4P | AH18 | | | | |
| 5 | IO_L73N_5 | AG18 | | | | |
| 5 | IO_L73P_5 | AF18 | | | | |
| 5 | IO_L69N_5/VREF_5 | AL19 | | | | |
| 5 | IO_L69P_5 | AK19 | | | | |
| 5 | IO_L68N_5 | AJ19 | | | | |
| 5 | IO_L68P_5 | AH19 | | | | |
| 5 | IO_L67N_5 | AE18 | | | | |
| 5 | IO_L67P_5 | AD18 | | | | |
| 5 | IO_L57N_5/VREF_5 | AL20 | | | | |
| 5 | IO_L57P_5 | AL21 | | | | |
| 5 | IO_L56N_5 | AJ20 | | | | |
| 5 | IO_L56P_5 | AH20 | | | | |
| 5 | IO_L55N_5 | AG19 | | | | |
| 5 | IO_L55P_5 | AF19 | | | | |
| 5 | IO_L54N_5 | AM22 | | | | |
| 5 | IO_L54P_5 | AM21 | | | | |
| 5 | IO_L53_5/No_Pair | AK21 | | | | |
| 5 | IO_L50_5/No_Pair | AJ21 | | | | |
| 5 | IO_L49N_5 | AE19 | | | | |
| 5 | IO_L49P_5 | AD19 | | | | |
| 5 | IO_L48N_5 | AL23 | | | | |
| 5 | IO_L48P_5 | AL22 | | | | |
| 5 | IO_L47N_5 | AH21 | | | | |
| 5 | IO_L47P_5 | AG21 | | | | |
| 5 | IO_L46N_5 | AF20 | | | | |
| 5 | IO_L46P_5 | AE20 | | | | |
| 5 | IO_L45N_5/VREF_5 | AM24 | | | | |
| 5 | IO_L45P_5 | AL24 | | | | |

*Table 10:* **FF1152 — XC2VP20, XC2VP30, XC2VP40, and XC2VP50**

| Bank | Pin Description | Pin Number | No Connects | | | |
|---|---|---|---|---|---|---|
| | | | XC2VP20 | XC2VP30 | XC2VP40 | XC2VP50 |
| 5 | IO_L44N_5 | AK22 | | | | |
| 5 | IO_L44P_5 | AJ22 | | | | |
| 5 | IO_L43N_5 | AF21 | | | | |
| 5 | IO_L43P_5 | AE21 | | | | |
| 5 | IO_L39N_5 | AK24 | | | | |
| 5 | IO_L39P_5 | AJ24 | | | | |
| 5 | IO_L38N_5 | AH22 | | | | |
| 5 | IO_L38P_5 | AG22 | | | | |
| 5 | IO_L37N_5 | AF22 | | | | |
| 5 | IO_L37P_5 | AE22 | | | | |
| 5 | IO_L27N_5/VREF_5 | AL25 | NC | NC | | |
| 5 | IO_L27P_5 | AK25 | NC | NC | | |
| 5 | IO_L26N_5 | AJ23 | NC | NC | | |
| 5 | IO_L26P_5 | AH23 | NC | NC | | |
| 5 | IO_L25N_5 | AH24 | NC | NC | | |
| 5 | IO_L25P_5 | AG24 | NC | NC | | |
| 5 | IO_L21N_5 | AM26 | NC | NC | | |
| 5 | IO_L21P_5 | AL26 | NC | NC | | |
| 5 | IO_L20N_5 | AK26 | NC | NC | | |
| 5 | IO_L20P_5 | AJ26 | NC | NC | | |
| 5 | IO_L19N_5 | AF23 | NC | NC | | |
| 5 | IO_L19P_5 | AE23 | NC | NC | | |
| 5 | IO_L09N_5/VREF_5 | AL27 | | | | |
| 5 | IO_L09P_5 | AK27 | | | | |
| 5 | IO_L08N_5 | AH25 | | | | |
| 5 | IO_L08P_5 | AG25 | | | | |
| 5 | IO_L07N_5/VREF_5 | AF24 | | | | |
| 5 | IO_L07P_5 | AE24 | | | | |
| 5 | IO_L06N_5/VRP_5 | AM28 | | | | |
| 5 | IO_L06P_5/VRN_5 | AL28 | | | | |
| 5 | IO_L05_5/No_Pair | AF25 | | | | |
| 5 | IO_L03N_5/D4 | AK28 | | | | |
| 5 | IO_L03P_5/D5 | AK29 | | | | |
| 5 | IO_L02N_5/D6 | AH26 | | | | |
| 5 | IO_L02P_5/D7 | AG26 | | | | |
| 5 | IO_L01N_5/RDWR_B | AL29 | | | | |
| 5 | IO_L01P_5/CS_B | AL30 | | | | |

*Table 10:* **FF1152 — XC2VP20, XC2VP30, XC2VP40, and XC2VP50**

| Bank | Pin Description | Pin Number | No Connects | | | |
|---|---|---|---|---|---|---|
| | | | XC2VP20 | XC2VP30 | XC2VP40 | XC2VP50 |
| 6 | IO_L01P_6/VRN_6 | AJ30 | | | | |
| 6 | IO_L01N_6/VRP_6 | AJ31 | | | | |
| 6 | IO_L02P_6 | AJ27 | | | | |
| 6 | IO_L02N_6 | AJ28 | | | | |
| 6 | IO_L03P_6 | AK31 | | | | |
| 6 | IO_L03N_6/VREF_6 | AK32 | | | | |
| 6 | IO_L04P_6 | AH29 | | | | |
| 6 | IO_L04N_6 | AH30 | | | | |
| 6 | IO_L05P_6 | AH27 | | | | |
| 6 | IO_L05N_6 | AG28 | | | | |
| 6 | IO_L06P_6 | AL33 | | | | |
| 6 | IO_L06N_6 | AL34 | | | | |
| 6 | IO_L15P_6 | AG29 | NC | | | |
| 6 | IO_L15N_6/VREF_6 | AG30 | NC | | | |
| 6 | IO_L16P_6 | AK33 | NC | | | |
| 6 | IO_L16N_6 | AK34 | NC | | | |
| 6 | IO_L17P_6 | AF27 | NC | | | |
| 6 | IO_L17N_6 | AF28 | NC | | | |
| 6 | IO_L18P_6 | AJ33 | NC | | | |
| 6 | IO_L18N_6 | AJ34 | NC | | | |
| 6 | IO_L19P_6 | AH31 | NC | | | |
| 6 | IO_L19N_6 | AH32 | NC | | | |
| 6 | IO_L20P_6 | AD25 | NC | | | |
| 6 | IO_L20N_6 | AD26 | NC | | | |
| 6 | IO_L21P_6 | AG31 | NC | | | |
| 6 | IO_L21N_6/VREF_6 | AG32 | NC | | | |
| 6 | IO_L22P_6 | AF29 | NC | | | |
| 6 | IO_L22N_6 | AF30 | NC | | | |
| 6 | IO_L23P_6 | AE27 | NC | | | |
| 6 | IO_L23N_6 | AE28 | NC | | | |
| 6 | IO_L24P_6 | AH33 | NC | | | |
| 6 | IO_L24N_6 | AH34 | NC | | | |
| 6 | IO_L31P_6 | AF31 | | | | |
| 6 | IO_L31N_6 | AF32 | | | | |
| 6 | IO_L32P_6 | AC25 | | | | |
| 6 | IO_L32N_6 | AC26 | | | | |
| 6 | IO_L33P_6 | AG33 | | | | |
| 6 | IO_L33N_6/VREF_6 | AG34 | | | | |

*Table 10:* **FF1152 — XC2VP20, XC2VP30, XC2VP40, and XC2VP50**

| Bank | Pin Description | Pin Number | No Connects | | | |
|---|---|---|---|---|---|---|
| | | | XC2VP20 | XC2VP30 | XC2VP40 | XC2VP50 |
| 6 | IO_L34P_6 | AE30 | | | | |
| 6 | IO_L34N_6 | AE31 | | | | |
| 6 | IO_L35P_6 | AD27 | | | | |
| 6 | IO_L35N_6 | AD28 | | | | |
| 6 | IO_L36P_6 | AF33 | | | | |
| 6 | IO_L36N_6 | AE33 | | | | |
| 6 | IO_L37P_6 | AD29 | | | | |
| 6 | IO_L37N_6 | AD30 | | | | |
| 6 | IO_L38P_6 | AB25 | | | | |
| 6 | IO_L38N_6 | AB26 | | | | |
| 6 | IO_L39P_6 | AD31 | | | | |
| 6 | IO_L39N_6/VREF_6 | AD32 | | | | |
| 6 | IO_L40P_6 | AC28 | | | | |
| 6 | IO_L40N_6 | AC29 | | | | |
| 6 | IO_L41P_6 | AB27 | | | | |
| 6 | IO_L41N_6 | AB28 | | | | |
| 6 | IO_L42P_6 | AE34 | | | | |
| 6 | IO_L42N_6 | AD34 | | | | |
| 6 | IO_L43P_6 | AC31 | | | | |
| 6 | IO_L43N_6 | AC32 | | | | |
| 6 | IO_L44P_6 | AA25 | | | | |
| 6 | IO_L44N_6 | AA26 | | | | |
| 6 | IO_L45P_6 | AD33 | | | | |
| 6 | IO_L45N_6/VREF_6 | AC33 | | | | |
| 6 | IO_L46P_6 | AB29 | | | | |
| 6 | IO_L46N_6 | AB30 | | | | |
| 6 | IO_L47P_6 | AA27 | | | | |
| 6 | IO_L47N_6 | AA28 | | | | |
| 6 | IO_L48P_6 | AB31 | | | | |
| 6 | IO_L48N_6 | AB32 | | | | |
| 6 | IO_L49P_6 | AA29 | | | | |
| 6 | IO_L49N_6 | AA30 | | | | |
| 6 | IO_L50P_6 | Y25 | | | | |
| 6 | IO_L50N_6 | Y26 | | | | |
| 6 | IO_L51P_6 | AC34 | | | | |
| 6 | IO_L51N_6/VREF_6 | AB34 | | | | |
| 6 | IO_L52P_6 | AA31 | | | | |
| 6 | IO_L52N_6 | AA32 | | | | |

*Table 10:* **FF1152 — XC2VP20, XC2VP30, XC2VP40, and XC2VP50**

| Bank | Pin Description | Pin Number | No Connects | | | |
|---|---|---|---|---|---|---|
| | | | XC2VP20 | XC2VP30 | XC2VP40 | XC2VP50 |
| 6 | IO_L53P_6 | W25 | | | | |
| 6 | IO_L53N_6 | W26 | | | | |
| 6 | IO_L54P_6 | AB33 | | | | |
| 6 | IO_L54N_6 | AA33 | | | | |
| 6 | IO_L55P_6 | Y28 | | | | |
| 6 | IO_L55N_6 | Y29 | | | | |
| 6 | IO_L56P_6 | W27 | | | | |
| 6 | IO_L56N_6 | W28 | | | | |
| 6 | IO_L57P_6 | Y31 | | | | |
| 6 | IO_L57N_6/VREF_6 | Y32 | | | | |
| 6 | IO_L58P_6 | W29 | | | | |
| 6 | IO_L58N_6 | W30 | | | | |
| 6 | IO_L59P_6 | W24 | | | | |
| 6 | IO_L59N_6 | V24 | | | | |
| 6 | IO_L60P_6 | AA34 | | | | |
| 6 | IO_L60N_6 | Y34 | | | | |
| 6 | IO_L85P_6 | W31 | | | | |
| 6 | IO_L85N_6 | W32 | | | | |
| 6 | IO_L86P_6 | V25 | | | | |
| 6 | IO_L86N_6 | V26 | | | | |
| 6 | IO_L87P_6 | Y33 | | | | |
| 6 | IO_L87N_6/VREF_6 | W33 | | | | |
| 6 | IO_L88P_6 | V29 | | | | |
| 6 | IO_L88N_6 | V30 | | | | |
| 6 | IO_L89P_6 | V27 | | | | |
| 6 | IO_L89N_6 | V28 | | | | |
| 6 | IO_L90P_6 | V31 | | | | |
| 6 | IO_L90N_6 | V32 | | | | |
| | | | | | | |
| 7 | IO_L90P_7 | U32 | | | | |
| 7 | IO_L90N_7 | U31 | | | | |
| 7 | IO_L89P_7 | U28 | | | | |
| 7 | IO_L89N_7 | U27 | | | | |
| 7 | IO_L88P_7 | V33 | | | | |
| 7 | IO_L88N_7/VREF_7 | U33 | | | | |
| 7 | IO_L87P_7 | U30 | | | | |
| 7 | IO_L87N_7 | U29 | | | | |
| 7 | IO_L86P_7 | U26 | | | | |

*Table 10:* **FF1152 — XC2VP20, XC2VP30, XC2VP40, and XC2VP50**

| Bank | Pin Description | Pin Number | No Connects | | | |
|---|---|---|---|---|---|---|
| | | | XC2VP20 | XC2VP30 | XC2VP40 | XC2VP50 |
| 7 | IO_L86N_7 | U25 | | | | |
| 7 | IO_L85P_7 | T32 | | | | |
| 7 | IO_L85N_7 | T31 | | | | |
| 7 | IO_L60P_7 | T30 | | | | |
| 7 | IO_L60N_7 | T29 | | | | |
| 7 | IO_L59P_7 | T28 | | | | |
| 7 | IO_L59N_7 | T27 | | | | |
| 7 | IO_L58P_7 | T33 | | | | |
| 7 | IO_L58N_7/VREF_7 | R33 | | | | |
| 7 | IO_L57P_7 | R32 | | | | |
| 7 | IO_L57N_7 | R31 | | | | |
| 7 | IO_L56P_7 | T26 | | | | |
| 7 | IO_L56N_7 | T25 | | | | |
| 7 | IO_L55P_7 | R34 | | | | |
| 7 | IO_L55N_7 | P34 | | | | |
| 7 | IO_L54P_7 | R29 | | | | |
| 7 | IO_L54N_7 | R28 | | | | |
| 7 | IO_L53P_7 | U24 | | | | |
| 7 | IO_L53N_7 | T24 | | | | |
| 7 | IO_L52P_7 | P32 | | | | |
| 7 | IO_L52N_7/VREF_7 | P31 | | | | |
| 7 | IO_L51P_7 | P30 | | | | |
| 7 | IO_L51N_7 | P29 | | | | |
| 7 | IO_L50P_7 | R26 | | | | |
| 7 | IO_L50N_7 | R25 | | | | |
| 7 | IO_L49P_7 | P33 | | | | |
| 7 | IO_L49N_7 | N33 | | | | |
| 7 | IO_L48P_7 | N32 | | | | |
| 7 | IO_L48N_7 | N31 | | | | |
| 7 | IO_L47P_7 | P28 | | | | |
| 7 | IO_L47N_7 | P27 | | | | |
| 7 | IO_L46P_7 | N34 | | | | |
| 7 | IO_L46N_7/VREF_7 | M34 | | | | |
| 7 | IO_L45P_7 | N30 | | | | |
| 7 | IO_L45N_7 | N29 | | | | |
| 7 | IO_L44P_7 | P26 | | | | |
| 7 | IO_L44N_7 | P25 | | | | |
| 7 | IO_L43P_7 | M32 | | | | |

*Table 10:* **FF1152 — XC2VP20, XC2VP30, XC2VP40, and XC2VP50**

| Bank | Pin Description | Pin Number | No Connects | | | |
|---|---|---|---|---|---|---|
| | | | XC2VP20 | XC2VP30 | XC2VP40 | XC2VP50 |
| 7 | IO_L43N_7 | M31 | | | | |
| 7 | IO_L42P_7 | L32 | | | | |
| 7 | IO_L42N_7 | L31 | | | | |
| 7 | IO_L41P_7 | N28 | | | | |
| 7 | IO_L41N_7 | N27 | | | | |
| 7 | IO_L40P_7 | M33 | | | | |
| 7 | IO_L40N_7/VREF_7 | L33 | | | | |
| 7 | IO_L39P_7 | M29 | | | | |
| 7 | IO_L39N_7 | M28 | | | | |
| 7 | IO_L38P_7 | N26 | | | | |
| 7 | IO_L38N_7 | N25 | | | | |
| 7 | IO_L37P_7 | L34 | | | | |
| 7 | IO_L37N_7 | K34 | | | | |
| 7 | IO_L36P_7 | L30 | | | | |
| 7 | IO_L36N_7 | L29 | | | | |
| 7 | IO_L35P_7 | L28 | | | | |
| 7 | IO_L35N_7 | L27 | | | | |
| 7 | IO_L34P_7 | K33 | | | | |
| 7 | IO_L34N_7/VREF_7 | J33 | | | | |
| 7 | IO_L33P_7 | K31 | | | | |
| 7 | IO_L33N_7 | K30 | | | | |
| 7 | IO_L32P_7 | M26 | | | | |
| 7 | IO_L32N_7 | M25 | | | | |
| 7 | IO_L31P_7 | H34 | | | | |
| 7 | IO_L31N_7 | H33 | | | | |
| 7 | IO_L24P_7 | H32 | NC | | | |
| 7 | IO_L24N_7 | H31 | NC | | | |
| 7 | IO_L23P_7 | K28 | NC | | | |
| 7 | IO_L23N_7 | K27 | NC | | | |
| 7 | IO_L22P_7 | J32 | NC | | | |
| 7 | IO_L22N_7/VREF_7 | J31 | NC | | | |
| 7 | IO_L21P_7 | J30 | NC | | | |
| 7 | IO_L21N_7 | J29 | NC | | | |
| 7 | IO_L20P_7 | G34 | NC | | | |
| 7 | IO_L20N_7 | G33 | NC | | | |
| 7 | IO_L19P_7 | H30 | NC | | | |
| 7 | IO_L19N_7 | H29 | NC | | | |
| 7 | IO_L18P_7 | L26 | NC | | | |

*Table 10:* **FF1152 — XC2VP20, XC2VP30, XC2VP40, and XC2VP50**

| Bank | Pin Description | Pin Number | No Connects | | | |
|---|---|---|---|---|---|---|
| | | | XC2VP20 | XC2VP30 | XC2VP40 | XC2VP50 |
| 7 | IO_L18N_7 | L25 | NC | | | |
| 7 | IO_L17P_7 | F34 | NC | | | |
| 7 | IO_L17N_7 | F33 | NC | | | |
| 7 | IO_L16P_7 | G30 | NC | | | |
| 7 | IO_L16N_7/VREF_7 | G29 | NC | | | |
| 7 | IO_L15P_7 | G32 | NC | | | |
| 7 | IO_L15N_7 | G31 | NC | | | |
| 7 | IO_L06P_7 | F31 | | | | |
| 7 | IO_L06N_7 | F30 | | | | |
| 7 | IO_L05P_7 | J28 | | | | |
| 7 | IO_L05N_7 | J27 | | | | |
| 7 | IO_L04P_7 | E34 | | | | |
| 7 | IO_L04N_7/VREF_7 | E33 | | | | |
| 7 | IO_L03P_7 | E32 | | | | |
| 7 | IO_L03N_7 | E31 | | | | |
| 7 | IO_L02P_7 | F28 | | | | |
| 7 | IO_L02N_7 | F27 | | | | |
| 7 | IO_L01P_7/VRN_7 | D34 | | | | |
| 7 | IO_L01N_7/VRP_7 | D33 | | | | |
| | | | | | | |
| 0 | VCCO_0 | C29 | | | | |
| 0 | VCCO_0 | E20 | | | | |
| 0 | VCCO_0 | F25 | | | | |
| 0 | VCCO_0 | L20 | | | | |
| 0 | VCCO_0 | L21 | | | | |
| 0 | VCCO_0 | L22 | | | | |
| 0 | VCCO_0 | L23 | | | | |
| 0 | VCCO_0 | M18 | | | | |
| 0 | VCCO_0 | M19 | | | | |
| 0 | VCCO_0 | M20 | | | | |
| 0 | VCCO_0 | M21 | | | | |
| 0 | VCCO_0 | M22 | | | | |
| 1 | VCCO_1 | C6 | | | | |
| 1 | VCCO_1 | E15 | | | | |
| 1 | VCCO_1 | F10 | | | | |
| 1 | VCCO_1 | L12 | | | | |
| 1 | VCCO_1 | L13 | | | | |
| 1 | VCCO_1 | L14 | | | | |

*Table 10:* **FF1152 — XC2VP20, XC2VP30, XC2VP40, and XC2VP50**

| Bank | Pin Description | Pin Number | No Connects | | | |
|---|---|---|---|---|---|---|
| | | | XC2VP20 | XC2VP30 | XC2VP40 | XC2VP50 |
| 1 | VCCO_1 | L15 | | | | |
| 1 | VCCO_1 | M13 | | | | |
| 1 | VCCO_1 | M14 | | | | |
| 1 | VCCO_1 | M15 | | | | |
| 1 | VCCO_1 | M16 | | | | |
| 1 | VCCO_1 | M17 | | | | |
| 2 | VCCO_2 | F3 | | | | |
| 2 | VCCO_2 | K6 | | | | |
| 2 | VCCO_2 | M11 | | | | |
| 2 | VCCO_2 | N11 | | | | |
| 2 | VCCO_2 | N12 | | | | |
| 2 | VCCO_2 | P11 | | | | |
| 2 | VCCO_2 | P12 | | | | |
| 2 | VCCO_2 | R5 | | | | |
| 2 | VCCO_2 | R11 | | | | |
| 2 | VCCO_2 | R12 | | | | |
| 2 | VCCO_2 | T12 | | | | |
| 2 | VCCO_2 | U12 | | | | |
| 3 | VCCO_3 | V12 | | | | |
| 3 | VCCO_3 | W12 | | | | |
| 3 | VCCO_3 | Y5 | | | | |
| 3 | VCCO_3 | Y11 | | | | |
| 3 | VCCO_3 | Y12 | | | | |
| 3 | VCCO_3 | AA11 | | | | |
| 3 | VCCO_3 | AA12 | | | | |
| 3 | VCCO_3 | AB11 | | | | |
| 3 | VCCO_3 | AB12 | | | | |
| 3 | VCCO_3 | AC11 | | | | |
| 3 | VCCO_3 | AE6 | | | | |
| 3 | VCCO_3 | AJ3 | | | | |
| 4 | VCCO_4 | AC13 | | | | |
| 4 | VCCO_4 | AC14 | | | | |
| 4 | VCCO_4 | AC15 | | | | |
| 4 | VCCO_4 | AC16 | | | | |
| 4 | VCCO_4 | AC17 | | | | |
| 4 | VCCO_4 | AD12 | | | | |
| 4 | VCCO_4 | AD13 | | | | |
| 4 | VCCO_4 | AD14 | | | | |

*Table 10:* **FF1152 — XC2VP20, XC2VP30, XC2VP40, and XC2VP50**

| Bank | Pin Description | Pin Number | No Connects | | | |
|---|---|---|---|---|---|---|
| | | | XC2VP20 | XC2VP30 | XC2VP40 | XC2VP50 |
| 4 | VCCO_4 | AD15 | | | | |
| 4 | VCCO_4 | AJ10 | | | | |
| 4 | VCCO_4 | AK15 | | | | |
| 4 | VCCO_4 | AM6 | | | | |
| 5 | VCCO_5 | AC18 | | | | |
| 5 | VCCO_5 | AC19 | | | | |
| 5 | VCCO_5 | AC20 | | | | |
| 5 | VCCO_5 | AC21 | | | | |
| 5 | VCCO_5 | AC22 | | | | |
| 5 | VCCO_5 | AD20 | | | | |
| 5 | VCCO_5 | AD21 | | | | |
| 5 | VCCO_5 | AD22 | | | | |
| 5 | VCCO_5 | AD23 | | | | |
| 5 | VCCO_5 | AJ25 | | | | |
| 5 | VCCO_5 | AK20 | | | | |
| 5 | VCCO_5 | AM29 | | | | |
| 6 | VCCO_6 | V23 | | | | |
| 6 | VCCO_6 | W23 | | | | |
| 6 | VCCO_6 | Y23 | | | | |
| 6 | VCCO_6 | Y24 | | | | |
| 6 | VCCO_6 | Y30 | | | | |
| 6 | VCCO_6 | AA23 | | | | |
| 6 | VCCO_6 | AA24 | | | | |
| 6 | VCCO_6 | AB23 | | | | |
| 6 | VCCO_6 | AB24 | | | | |
| 6 | VCCO_6 | AC24 | | | | |
| 6 | VCCO_6 | AE29 | | | | |
| 6 | VCCO_6 | AJ32 | | | | |
| 7 | VCCO_7 | F32 | | | | |
| 7 | VCCO_7 | K29 | | | | |
| 7 | VCCO_7 | M24 | | | | |
| 7 | VCCO_7 | N23 | | | | |
| 7 | VCCO_7 | N24 | | | | |
| 7 | VCCO_7 | P23 | | | | |
| 7 | VCCO_7 | P24 | | | | |
| 7 | VCCO_7 | R23 | | | | |
| 7 | VCCO_7 | R24 | | | | |
| 7 | VCCO_7 | R30 | | | | |

*Table 10:* **FF1152 — XC2VP20, XC2VP30, XC2VP40, and XC2VP50**

| Bank | Pin Description | Pin Number | No Connects | | | |
|---|---|---|---|---|---|---|
| | | | XC2VP20 | XC2VP30 | XC2VP40 | XC2VP50 |
| 7 | VCCO_7 | T23 | | | | |
| 7 | VCCO_7 | U23 | | | | |
| | | | | | | |
| N/A | CCLK | AE9 | | | | |
| N/A | PROG_B | J26 | | | | |
| N/A | DONE | AE10 | | | | |
| N/A | M0 | AF26 | | | | |
| N/A | M1 | AE26 | | | | |
| N/A | M2 | AE25 | | | | |
| N/A | TCK | J9 | | | | |
| N/A | TDI | H28 | | | | |
| N/A | TDO | H7 | | | | |
| N/A | TMS | K10 | | | | |
| N/A | PWRDWN_B | AF9 | | | | |
| N/A | HSWAP_EN | K25 | | | | |
| N/A | RSVD | G8 | | | | |
| N/A | VBATT | K9 | | | | |
| N/A | DXP | K26 | | | | |
| N/A | DXN | G27 | | | | |
| N/A | AVCCAUXTX2 | B32 | NC | NC | | |
| N/A | VTTXPAD2 | B33 | NC | NC | | |
| N/A | TXNPAD2 | A33 | NC | NC | | |
| N/A | TXPPAD2 | A32 | NC | NC | | |
| N/A | GNDA2 | C30 | NC | NC | | |
| N/A | RXPPAD2 | A31 | NC | NC | | |
| N/A | RXNPAD2 | A30 | NC | NC | | |
| N/A | VTRXPAD2 | B31 | NC | NC | | |
| N/A | AVCCAUXRX2 | B30 | NC | NC | | |
| N/A | AVCCAUXTX4 | B28 | | | | |
| N/A | VTTXPAD4 | B29 | | | | |
| N/A | TXNPAD4 | A29 | | | | |
| N/A | TXPPAD4 | A28 | | | | |
| N/A | GNDA4 | C27 | | | | |
| N/A | RXPPAD4 | A27 | | | | |
| N/A | RXNPAD4 | A26 | | | | |
| N/A | VTRXPAD4 | B27 | | | | |
| N/A | AVCCAUXRX4 | B26 | | | | |
| N/A | AVCCAUXTX5 | B24 | NC | NC | NC | |

*Table 10:* **FF1152 — XC2VP20, XC2VP30, XC2VP40, and XC2VP50**

| Bank | Pin Description | Pin Number | No Connects | | | |
|---|---|---|---|---|---|---|
| | | | XC2VP20 | XC2VP30 | XC2VP40 | XC2VP50 |
| N/A | VTTXPAD5 | B25 | NC | NC | NC | |
| N/A | TXNPAD5 | A25 | NC | NC | NC | |
| N/A | TXPPAD5 | A24 | NC | NC | NC | |
| N/A | GNDA5 | C23 | NC | NC | NC | |
| N/A | RXPPAD5 | A23 | NC | NC | NC | |
| N/A | RXNPAD5 | A22 | NC | NC | NC | |
| N/A | VTRXPAD5 | B23 | NC | NC | NC | |
| N/A | AVCCAUXRX5 | B22 | NC | NC | NC | |
| N/A | AVCCAUXTX6 | B20 | | | | |
| N/A | VTTXPAD6 | B21 | | | | |
| N/A | TXNPAD6 | A21 | | | | |
| N/A | TXPPAD6 | A20 | | | | |
| N/A | GNDA6 | C20 | | | | |
| N/A | RXPPAD6 | A19 | | | | |
| N/A | RXNPAD6 | A18 | | | | |
| N/A | VTRXPAD6 | B19 | | | | |
| N/A | AVCCAUXRX6 | B18 | | | | |
| N/A | AVCCAUXTX7 | B16 | | | | |
| N/A | VTTXPAD7 | B17 | | | | |
| N/A | TXNPAD7 | A17 | | | | |
| N/A | TXPPAD7 | A16 | | | | |
| N/A | GNDA7 | C15 | | | | |
| N/A | RXPPAD7 | A15 | | | | |
| N/A | RXNPAD7 | A14 | | | | |
| N/A | VTRXPAD7 | B15 | | | | |
| N/A | AVCCAUXRX7 | B14 | | | | |
| N/A | AVCCAUXTX8 | B12 | NC | NC | NC | |
| N/A | VTTXPAD8 | B13 | NC | NC | NC | |
| N/A | TXNPAD8 | A13 | NC | NC | NC | |
| N/A | TXPPAD8 | A12 | NC | NC | NC | |
| N/A | GNDA8 | C12 | NC | NC | NC | |
| N/A | RXPPAD8 | A11 | NC | NC | NC | |
| N/A | RXNPAD8 | A10 | NC | NC | NC | |
| N/A | VTRXPAD8 | B11 | NC | NC | NC | |
| N/A | AVCCAUXRX8 | B10 | NC | NC | NC | |
| N/A | AVCCAUXTX9 | B8 | | | | |
| N/A | VTTXPAD9 | B9 | | | | |
| N/A | TXNPAD9 | A9 | | | | |

*Table 10:* **FF1152 — XC2VP20, XC2VP30, XC2VP40, and XC2VP50**

| Bank | Pin Description | Pin Number | No Connects | | | |
|---|---|---|---|---|---|---|
| | | | XC2VP20 | XC2VP30 | XC2VP40 | XC2VP50 |
| N/A | TXPPAD9 | A8 | | | | |
| N/A | GNDA9 | C8 | | | | |
| N/A | RXPPAD9 | A7 | | | | |
| N/A | RXNPAD9 | A6 | | | | |
| N/A | VTRXPAD9 | B7 | | | | |
| N/A | AVCCAUXRX9 | B6 | | | | |
| N/A | AVCCAUXTX11 | B4 | NC | NC | | |
| N/A | VTTXPAD11 | B5 | NC | NC | | |
| N/A | TXNPAD11 | A5 | NC | NC | | |
| N/A | TXPPAD11 | A4 | NC | NC | | |
| N/A | GNDA11 | C5 | NC | NC | | |
| N/A | RXPPAD11 | A3 | NC | NC | | |
| N/A | RXNPAD11 | A2 | NC | NC | | |
| N/A | VTRXPAD11 | B3 | NC | NC | | |
| N/A | AVCCAUXRX11 | B2 | NC | NC | | |
| N/A | AVCCAUXRX14 | AN2 | NC | NC | | |
| N/A | VTRXPAD14 | AN3 | NC | NC | | |
| N/A | RXNPAD14 | AP2 | NC | NC | | |
| N/A | RXPPAD14 | AP3 | NC | NC | | |
| N/A | GNDA14 | AM5 | NC | NC | | |
| N/A | TXPPAD14 | AP4 | NC | NC | | |
| N/A | TXNPAD14 | AP5 | NC | NC | | |
| N/A | VTTXPAD14 | AN5 | NC | NC | | |
| N/A | AVCCAUXTX14 | AN4 | NC | NC | | |
| N/A | AVCCAUXRX16 | AN6 | | | | |
| N/A | VTRXPAD16 | AN7 | | | | |
| N/A | RXNPAD16 | AP6 | | | | |
| N/A | RXPPAD16 | AP7 | | | | |
| N/A | GNDA16 | AM8 | | | | |
| N/A | TXPPAD16 | AP8 | | | | |
| N/A | TXNPAD16 | AP9 | | | | |
| N/A | VTTXPAD16 | AN9 | | | | |
| N/A | AVCCAUXTX16 | AN8 | | | | |
| N/A | AVCCAUXRX17 | AN10 | NC | NC | NC | |
| N/A | VTRXPAD17 | AN11 | NC | NC | NC | |
| N/A | RXNPAD17 | AP10 | NC | NC | NC | |
| N/A | RXPPAD17 | AP11 | NC | NC | NC | |
| N/A | GNDA17 | AM12 | NC | NC | NC | |

*Table 10:* **FF1152 — XC2VP20, XC2VP30, XC2VP40, and XC2VP50**

| Bank | Pin Description | Pin Number | No Connects | | | |
|---|---|---|---|---|---|---|
| | | | XC2VP20 | XC2VP30 | XC2VP40 | XC2VP50 |
| N/A | TXPPAD17 | AP12 | NC | NC | NC | |
| N/A | TXNPAD17 | AP13 | NC | NC | NC | |
| N/A | VTTXPAD17 | AN13 | NC | NC | NC | |
| N/A | AVCCAUXTX17 | AN12 | NC | NC | NC | |
| N/A | AVCCAUXRX18 | AN14 | | | | |
| N/A | VTRXPAD18 | AN15 | | | | |
| N/A | RXNPAD18 | AP14 | | | | |
| N/A | RXPPAD18 | AP15 | | | | |
| N/A | GNDA18 | AM15 | | | | |
| N/A | TXPPAD18 | AP16 | | | | |
| N/A | TXNPAD18 | AP17 | | | | |
| N/A | VTTXPAD18 | AN17 | | | | |
| N/A | AVCCAUXTX18 | AN16 | | | | |
| N/A | AVCCAUXRX19 | AN18 | | | | |
| N/A | VTRXPAD19 | AN19 | | | | |
| N/A | RXNPAD19 | AP18 | | | | |
| N/A | RXPPAD19 | AP19 | | | | |
| N/A | GNDA19 | AM20 | | | | |
| N/A | TXPPAD19 | AP20 | | | | |
| N/A | TXNPAD19 | AP21 | | | | |
| N/A | VTTXPAD19 | AN21 | | | | |
| N/A | AVCCAUXTX19 | AN20 | | | | |
| N/A | AVCCAUXRX20 | AN22 | NC | NC | NC | |
| N/A | VTRXPAD20 | AN23 | NC | NC | NC | |
| N/A | RXNPAD20 | AP22 | NC | NC | NC | |
| N/A | RXPPAD20 | AP23 | NC | NC | NC | |
| N/A | GNDA20 | AM23 | NC | NC | NC | |
| N/A | TXPPAD20 | AP24 | NC | NC | NC | |
| N/A | TXNPAD20 | AP25 | NC | NC | NC | |
| N/A | VTTXPAD20 | AN25 | NC | NC | NC | |
| N/A | AVCCAUXTX20 | AN24 | NC | NC | NC | |
| N/A | AVCCAUXRX21 | AN26 | | | | |
| N/A | VTRXPAD21 | AN27 | | | | |
| N/A | RXNPAD21 | AP26 | | | | |
| N/A | RXPPAD21 | AP27 | | | | |
| N/A | GNDA21 | AM27 | | | | |
| N/A | TXPPAD21 | AP28 | | | | |
| N/A | TXNPAD21 | AP29 | | | | |

*Table 10:* **FF1152 — XC2VP20, XC2VP30, XC2VP40, and XC2VP50**

| Bank | Pin Description | Pin Number | No Connects | | | |
|---|---|---|---|---|---|---|
| | | | XC2VP20 | XC2VP30 | XC2VP40 | XC2VP50 |
| N/A | VTTXPAD21 | AN29 | | | | |
| N/A | AVCCAUXTX21 | AN28 | | | | |
| N/A | AVCCAUXRX23 | AN30 | NC | NC | | |
| N/A | VTRXPAD23 | AN31 | NC | NC | | |
| N/A | RXNPAD23 | AP30 | NC | NC | | |
| N/A | RXPPAD23 | AP31 | NC | NC | | |
| N/A | GNDA23 | AM30 | NC | NC | | |
| N/A | TXPPAD23 | AP32 | NC | NC | | |
| N/A | TXNPAD23 | AP33 | NC | NC | | |
| N/A | VTTXPAD23 | AN33 | NC | NC | | |
| N/A | AVCCAUXTX23 | AN32 | NC | NC | | |
| | | | | | | |
| N/A | VCCINT | L11 | | | | |
| N/A | VCCINT | L24 | | | | |
| N/A | VCCINT | M12 | | | | |
| N/A | VCCINT | M23 | | | | |
| N/A | VCCINT | N13 | | | | |
| N/A | VCCINT | N14 | | | | |
| N/A | VCCINT | N15 | | | | |
| N/A | VCCINT | N16 | | | | |
| N/A | VCCINT | N17 | | | | |
| N/A | VCCINT | N18 | | | | |
| N/A | VCCINT | N19 | | | | |
| N/A | VCCINT | N20 | | | | |
| N/A | VCCINT | N21 | | | | |
| N/A | VCCINT | N22 | | | | |
| N/A | VCCINT | P13 | | | | |
| N/A | VCCINT | P22 | | | | |
| N/A | VCCINT | R13 | | | | |
| N/A | VCCINT | R22 | | | | |
| N/A | VCCINT | T13 | | | | |
| N/A | VCCINT | T22 | | | | |
| N/A | VCCINT | U13 | | | | |
| N/A | VCCINT | U22 | | | | |
| N/A | VCCINT | V13 | | | | |
| N/A | VCCINT | V22 | | | | |
| N/A | VCCINT | W13 | | | | |
| N/A | VCCINT | W22 | | | | |

*Table 10:* **FF1152 — XC2VP20, XC2VP30, XC2VP40, and XC2VP50**

| Bank | Pin Description | Pin Number | No Connects | | | |
|---|---|---|---|---|---|---|
| | | | XC2VP20 | XC2VP30 | XC2VP40 | XC2VP50 |
| N/A | VCCINT | Y13 | | | | |
| N/A | VCCINT | Y22 | | | | |
| N/A | VCCINT | AA13 | | | | |
| N/A | VCCINT | AA22 | | | | |
| N/A | VCCINT | AB13 | | | | |
| N/A | VCCINT | AB14 | | | | |
| N/A | VCCINT | AB15 | | | | |
| N/A | VCCINT | AB16 | | | | |
| N/A | VCCINT | AB17 | | | | |
| N/A | VCCINT | AB18 | | | | |
| N/A | VCCINT | AB19 | | | | |
| N/A | VCCINT | AB20 | | | | |
| N/A | VCCINT | AB21 | | | | |
| N/A | VCCINT | AB22 | | | | |
| N/A | VCCINT | AC12 | | | | |
| N/A | VCCINT | AC23 | | | | |
| N/A | VCCINT | AD11 | | | | |
| N/A | VCCINT | AD24 | | | | |
| N/A | VCCAUX | C3 | | | | |
| N/A | VCCAUX | C4 | | | | |
| N/A | VCCAUX | C17 | | | | |
| N/A | VCCAUX | C18 | | | | |
| N/A | VCCAUX | C31 | | | | |
| N/A | VCCAUX | C32 | | | | |
| N/A | VCCAUX | D3 | | | | |
| N/A | VCCAUX | D32 | | | | |
| N/A | VCCAUX | U1 | | | | |
| N/A | VCCAUX | V1 | | | | |
| N/A | VCCAUX | U34 | | | | |
| N/A | VCCAUX | V34 | | | | |
| N/A | VCCAUX | AL3 | | | | |
| N/A | VCCAUX | AL32 | | | | |
| N/A | VCCAUX | AM3 | | | | |
| N/A | VCCAUX | AM4 | | | | |
| N/A | VCCAUX | AM17 | | | | |
| N/A | VCCAUX | AM18 | | | | |
| N/A | VCCAUX | AM31 | | | | |
| N/A | VCCAUX | AM32 | | | | |

*Table 10:* **FF1152 — XC2VP20, XC2VP30, XC2VP40, and XC2VP50**

| Bank | Pin Description | Pin Number | No Connects | | | |
|---|---|---|---|---|---|---|
| | | | XC2VP20 | XC2VP30 | XC2VP40 | XC2VP50 |
| | | | | | | |
| N/A | GND | AF34 | | | | |
| N/A | GND | B34 | | | | |
| N/A | GND | C1 | | | | |
| N/A | GND | C2 | | | | |
| N/A | GND | C10 | | | | |
| N/A | GND | C16 | | | | |
| N/A | GND | C19 | | | | |
| N/A | GND | C25 | | | | |
| N/A | GND | C33 | | | | |
| N/A | GND | C34 | | | | |
| N/A | GND | D4 | | | | |
| N/A | GND | D31 | | | | |
| N/A | GND | E5 | | | | |
| N/A | GND | E12 | | | | |
| N/A | GND | E23 | | | | |
| N/A | GND | E30 | | | | |
| N/A | GND | F6 | | | | |
| N/A | GND | F29 | | | | |
| N/A | GND | G7 | | | | |
| N/A | GND | G28 | | | | |
| N/A | GND | B1 | | | | |
| N/A | GND | H8 | | | | |
| N/A | GND | H12 | | | | |
| N/A | GND | H15 | | | | |
| N/A | GND | H20 | | | | |
| N/A | GND | J1 | | | | |
| N/A | GND | H27 | | | | |
| N/A | GND | AF1 | | | | |
| N/A | GND | K3 | | | | |
| N/A | GND | K32 | | | | |
| N/A | GND | M5 | | | | |
| N/A | GND | M8 | | | | |
| N/A | GND | M27 | | | | |
| N/A | GND | M30 | | | | |
| N/A | GND | P14 | | | | |
| N/A | GND | P15 | | | | |
| N/A | GND | P16 | | | | |

*Table 10:* **FF1152 — XC2VP20, XC2VP30, XC2VP40, and XC2VP50**

| Bank | Pin Description | Pin Number | No Connects | | | |
|---|---|---|---|---|---|---|
| | | | XC2VP20 | XC2VP30 | XC2VP40 | XC2VP50 |
| N/A | GND | P17 | | | | |
| N/A | GND | P18 | | | | |
| N/A | GND | P19 | | | | |
| N/A | GND | P20 | | | | |
| N/A | GND | P21 | | | | |
| N/A | GND | R8 | | | | |
| N/A | GND | R14 | | | | |
| N/A | GND | R15 | | | | |
| N/A | GND | R16 | | | | |
| N/A | GND | R17 | | | | |
| N/A | GND | R18 | | | | |
| N/A | GND | R19 | | | | |
| N/A | GND | R20 | | | | |
| N/A | GND | R21 | | | | |
| N/A | GND | R27 | | | | |
| N/A | GND | T1 | | | | |
| N/A | GND | T14 | | | | |
| N/A | GND | T15 | | | | |
| N/A | GND | T16 | | | | |
| N/A | GND | T17 | | | | |
| N/A | GND | T18 | | | | |
| N/A | GND | T19 | | | | |
| N/A | GND | T20 | | | | |
| N/A | GND | T21 | | | | |
| N/A | GND | T34 | | | | |
| N/A | GND | U14 | | | | |
| N/A | GND | U15 | | | | |
| N/A | GND | U16 | | | | |
| N/A | GND | U17 | | | | |
| N/A | GND | U18 | | | | |
| N/A | GND | U19 | | | | |
| N/A | GND | U20 | | | | |
| N/A | GND | U21 | | | | |
| N/A | GND | V14 | | | | |
| N/A | GND | V15 | | | | |
| N/A | GND | V16 | | | | |
| N/A | GND | V17 | | | | |
| N/A | GND | V18 | | | | |

*Table 10:* **FF1152 — XC2VP20, XC2VP30, XC2VP40, and XC2VP50**

| Bank | Pin Description | Pin Number | No Connects | | | |
|---|---|---|---|---|---|---|
| | | | XC2VP20 | XC2VP30 | XC2VP40 | XC2VP50 |
| N/A | GND | V19 | | | | |
| N/A | GND | V20 | | | | |
| N/A | GND | V21 | | | | |
| N/A | GND | W1 | | | | |
| N/A | GND | W14 | | | | |
| N/A | GND | W15 | | | | |
| N/A | GND | W16 | | | | |
| N/A | GND | W17 | | | | |
| N/A | GND | W18 | | | | |
| N/A | GND | W19 | | | | |
| N/A | GND | W20 | | | | |
| N/A | GND | W21 | | | | |
| N/A | GND | W34 | | | | |
| N/A | GND | Y8 | | | | |
| N/A | GND | Y14 | | | | |
| N/A | GND | Y15 | | | | |
| N/A | GND | Y16 | | | | |
| N/A | GND | Y17 | | | | |
| N/A | GND | Y18 | | | | |
| N/A | GND | Y19 | | | | |
| N/A | GND | Y20 | | | | |
| N/A | GND | Y21 | | | | |
| N/A | GND | Y27 | | | | |
| N/A | GND | AA14 | | | | |
| N/A | GND | AA15 | | | | |
| N/A | GND | AA16 | | | | |
| N/A | GND | AA17 | | | | |
| N/A | GND | AA18 | | | | |
| N/A | GND | AA19 | | | | |
| N/A | GND | AA20 | | | | |
| N/A | GND | AA21 | | | | |
| N/A | GND | AC5 | | | | |
| N/A | GND | AC8 | | | | |
| N/A | GND | AC27 | | | | |
| N/A | GND | AC30 | | | | |
| N/A | GND | AE3 | | | | |
| N/A | GND | AE32 | | | | |
| N/A | GND | H23 | | | | |

*Table 10:* **FF1152 — XC2VP20, XC2VP30, XC2VP40, and XC2VP50**

| Bank | Pin Description | Pin Number | No Connects | | | |
|---|---|---|---|---|---|---|
| | | | XC2VP20 | XC2VP30 | XC2VP40 | XC2VP50 |
| N/A | GND | AG8 | | | | |
| N/A | GND | AG12 | | | | |
| N/A | GND | AG15 | | | | |
| N/A | GND | AG20 | | | | |
| N/A | GND | AG23 | | | | |
| N/A | GND | AG27 | | | | |
| N/A | GND | J34 | | | | |
| N/A | GND | AH7 | | | | |
| N/A | GND | AH28 | | | | |
| N/A | GND | AJ6 | | | | |
| N/A | GND | AJ29 | | | | |
| N/A | GND | AK5 | | | | |
| N/A | GND | AK12 | | | | |
| N/A | GND | AK23 | | | | |
| N/A | GND | AK30 | | | | |
| N/A | GND | AL4 | | | | |
| N/A | GND | AL31 | | | | |
| N/A | GND | AM1 | | | | |
| N/A | GND | AM2 | | | | |
| N/A | GND | AM10 | | | | |
| N/A | GND | AM16 | | | | |
| N/A | GND | AM19 | | | | |
| N/A | GND | AM25 | | | | |
| N/A | GND | AM33 | | | | |
| N/A | GND | AM34 | | | | |
| N/A | GND | AN1 | | | | |
| N/A | GND | AN34 | | | | |

**Notes:**
1. See Table 4 for an explanation of the signals available on this pin.

## FF1152 Flip-Chip Fine-Pitch BGA Package Specifications (1.00mm pitch)

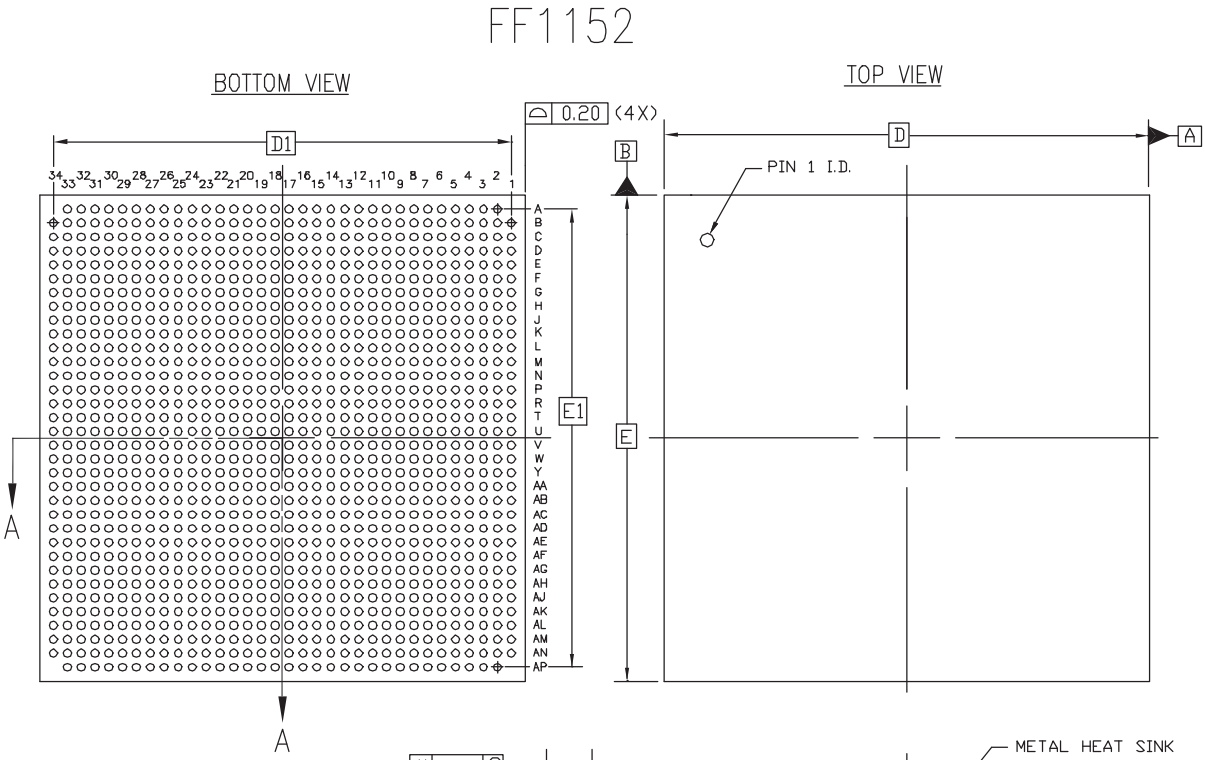


| SYMBOL | MILLIMETERS | | | NOTE |
|---|---|---|---|---|
| | MIN. | NOM. | MAX. | |
| A | — | 3.20 | 3.40 | |
| $A_1$ | 0.40 | 0.50 | 0.60 | |
| $A_2$ | — | — | 2.80 | |
| D/E | 35.00 BASIC | | | |
| $D_1/E_1$ | 33.00 REF | | | |
| e | 1.00 BASIC | | | |
| Øb | 0.50 | 0.60 | 0.70 | |
| aaa | — | — | 0.20 | |
| ccc | — | — | 0.35 | |
| ddd | — | — | 0.30 | |
| eee | — | — | 0.10 | |
| M | 34 | | | 2 |

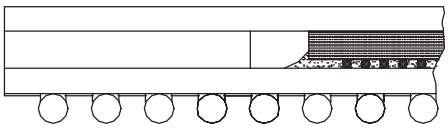

SECTION A–A
(NOT TO SCALE)

NOTES:
1. ALL DIMENSIONS AND TOLERANCES CONFORM TO ANSI Y14.5M–1994
2. SYMBOL 'M' IS THE BALL MATRIX SIZE.
3. CONFORMS TO JEDEC MS–034–AAR–1 (DEPOPULATED)

*Figure 6:* **FF1152 Flip-Chip Fine-Pitch BGA Package Specifications**

## FF1148 Flip-Chip Fine-Pitch BGA Package

As shown in Table 11, XC2VP40 and XC2VP50 Virtex-II Pro devices are available in the FF1148 flip-chip fine-pitch BGA package. Pins in each of these devices are the same, except for the differences shown in the No Connect column. Following this table are the FF1148 Flip-Chip Fine-Pitch BGA Package Specifications (1.00mm pitch).

*Table 11:* **FF1148 — XC2VP40 and XC2VP50**

| Bank | Pin Description | Pin Number | No Connects | |
|---|---|---|---|---|
| | | | XC2VP40 | XC2VP50 |
| 0 | IO_L01N_0/VRP_0 | E25 | | |
| 0 | IO_L01P_0/VRN_0 | F25 | | |
| 0 | IO_L02N_0 | J24 | | |
| 0 | IO_L02P_0 | K24 | | |
| 0 | IO_L03N_0 | C25 | | |
| 0 | IO_L03P_0/VREF_0 | D25 | | |
| 0 | IO_L05_0/No_Pair | G25 | | |
| 0 | IO_L06N_0 | A25 | | |
| 0 | IO_L06P_0 | B25 | | |
| 0 | IO_L07N_0 | G24 | | |
| 0 | IO_L07P_0 | G23 | | |
| 0 | IO_L08N_0 | H23 | | |
| 0 | IO_L08P_0 | H22 | | |
| 0 | IO_L09N_0 | E24 | | |
| 0 | IO_L09P_0/VREF_0 | F24 | | |
| 0 | IO_L19N_0 | C24 | | |
| 0 | IO_L19P_0 | C23 | | |
| 0 | IO_L20N_0 | J23 | | |
| 0 | IO_L20P_0 | K23 | | |
| 0 | IO_L21N_0 | A24 | | |
| 0 | IO_L21P_0 | B24 | | |
| 0 | IO_L25N_0 | E23 | | |
| 0 | IO_L25P_0 | F23 | | |
| 0 | IO_L26N_0 | K22 | | |
| 0 | IO_L26P_0 | L22 | | |
| 0 | IO_L27N_0 | D23 | | |
| 0 | IO_L27P_0/VREF_0 | D22 | | |
| 0 | IO_L37N_0 | A23 | | |
| 0 | IO_L37P_0 | B23 | | |
| 0 | IO_L38N_0 | J21 | | |
| 0 | IO_L38P_0 | J20 | | |
| 0 | IO_L39N_0 | F22 | | |
| 0 | IO_L39P_0 | G22 | | |

*Table 11:* **FF1148 — XC2VP40 and XC2VP50**

| Bank | Pin Description | Pin Number | No Connects | |
|---|---|---|---|---|
| | | | XC2VP40 | XC2VP50 |
| 0 | IO_L43N_0 | B22 | | |
| 0 | IO_L43P_0 | C22 | | |
| 0 | IO_L44N_0 | K21 | | |
| 0 | IO_L44P_0 | L21 | | |
| 0 | IO_L45N_0 | G21 | | |
| 0 | IO_L45P_0/VREF_0 | H21 | | |
| 0 | IO_L46N_0 | E21 | | |
| 0 | IO_L46P_0 | F21 | | |
| 0 | IO_L47N_0 | K20 | | |
| 0 | IO_L47P_0 | L20 | | |
| 0 | IO_L48N_0 | C21 | | |
| 0 | IO_L48P_0 | D21 | | |
| 0 | IO_L49N_0 | A21 | | |
| 0 | IO_L49P_0 | B21 | | |
| 0 | IO_L50_0/No_Pair | G20 | | |
| 0 | IO_L53_0/No_Pair | H19 | | |
| 0 | IO_L54N_0 | E20 | | |
| 0 | IO_L54P_0 | F20 | | |
| 0 | IO_L55N_0 | C20 | | |
| 0 | IO_L55P_0 | D19 | | |
| 0 | IO_L56N_0 | K19 | | |
| 0 | IO_L56P_0 | L19 | | |
| 0 | IO_L57N_0 | A20 | | |
| 0 | IO_L57P_0/VREF_0 | B20 | | |
| 0 | IO_L66N_0 | F19 | NC | |
| 0 | IO_L66P_0/VREF_0 | G19 | NC | |
| 0 | IO_L67N_0 | B19 | | |
| 0 | IO_L67P_0 | C19 | | |
| 0 | IO_L68N_0 | H18 | | |
| 0 | IO_L68P_0 | J18 | | |
| 0 | IO_L69N_0 | F18 | | |
| 0 | IO_L69P_0/VREF_0 | G18 | | |
| 0 | IO_L73N_0 | D18 | | |
| 0 | IO_L73P_0 | E18 | | |
| 0 | IO_L74N_0/GCLK7P | K18 | | |
| 0 | IO_L74P_0/GCLK6S | L18 | | |
| 0 | IO_L75N_0/GCLK5P | B18 | | |
| 0 | IO_L75P_0/GCLK4S | C18 | | |

*Table 11:* **FF1148 — XC2VP40 and XC2VP50**

| Bank | Pin Description | Pin Number | No Connects | |
|---|---|---|---|---|
| | | | XC2VP40 | XC2VP50 |
| | | | | |
| 1 | IO_L75N_1/GCLK3P | C17 | | |
| 1 | IO_L75P_1/GCLK2S | B17 | | |
| 1 | IO_L74N_1/GCLK1P | L17 | | |
| 1 | IO_L74P_1/GCLK0S | K17 | | |
| 1 | IO_L73N_1 | E17 | | |
| 1 | IO_L73P_1 | D17 | | |
| 1 | IO_L69N_1/VREF_1 | G17 | | |
| 1 | IO_L69P_1 | F17 | | |
| 1 | IO_L68N_1 | J17 | | |
| 1 | IO_L68P_1 | H17 | | |
| 1 | IO_L67N_1 | C16 | | |
| 1 | IO_L67P_1 | B16 | | |
| 1 | IO_L66N_1/VREF_1 | G16 | NC | |
| 1 | IO_L66P_1 | F16 | NC | |
| 1 | IO_L57N_1/VREF_1 | B15 | | |
| 1 | IO_L57P_1 | A15 | | |
| 1 | IO_L56N_1 | L16 | | |
| 1 | IO_L56P_1 | K16 | | |
| 1 | IO_L55N_1 | D16 | | |
| 1 | IO_L55P_1 | C15 | | |
| 1 | IO_L54N_1 | F15 | | |
| 1 | IO_L54P_1 | E15 | | |
| 1 | IO_L53_1/No_Pair | H16 | | |
| 1 | IO_L50_1/No_Pair | G15 | | |
| 1 | IO_L49N_1 | B14 | | |
| 1 | IO_L49P_1 | A14 | | |
| 1 | IO_L48N_1 | D14 | | |
| 1 | IO_L48P_1 | C14 | | |
| 1 | IO_L47N_1 | L15 | | |
| 1 | IO_L47P_1 | K15 | | |
| 1 | IO_L46N_1 | F14 | | |
| 1 | IO_L46P_1 | E14 | | |
| 1 | IO_L45N_1/VREF_1 | H14 | | |
| 1 | IO_L45P_1 | G14 | | |
| 1 | IO_L44N_1 | L14 | | |
| 1 | IO_L44P_1 | K14 | | |
| 1 | IO_L43N_1 | C13 | | |

*Table 11:* **FF1148 — XC2VP40 and XC2VP50**

| Bank | Pin Description | Pin Number | No Connects | |
|---|---|---|---|---|
| | | | XC2VP40 | XC2VP50 |
| 1 | IO_L43P_1 | B13 | | |
| 1 | IO_L39N_1 | G13 | | |
| 1 | IO_L39P_1 | F13 | | |
| 1 | IO_L38N_1 | J15 | | |
| 1 | IO_L38P_1 | J14 | | |
| 1 | IO_L37N_1 | B12 | | |
| 1 | IO_L37P_1 | A12 | | |
| 1 | IO_L27N_1/VREF_1 | D13 | | |
| 1 | IO_L27P_1 | D12 | | |
| 1 | IO_L26N_1 | L13 | | |
| 1 | IO_L26P_1 | K13 | | |
| 1 | IO_L25N_1 | F12 | | |
| 1 | IO_L25P_1 | E12 | | |
| 1 | IO_L21N_1 | B11 | | |
| 1 | IO_L21P_1 | A11 | | |
| 1 | IO_L20N_1 | K12 | | |
| 1 | IO_L20P_1 | J12 | | |
| 1 | IO_L19N_1 | C12 | | |
| 1 | IO_L19P_1 | C11 | | |
| 1 | IO_L09N_1/VREF_1 | F11 | | |
| 1 | IO_L09P_1 | E11 | | |
| 1 | IO_L08N_1 | H13 | | |
| 1 | IO_L08P_1 | H12 | | |
| 1 | IO_L07N_1 | G12 | | |
| 1 | IO_L07P_1 | G11 | | |
| 1 | IO_L06N_1 | B10 | | |
| 1 | IO_L06P_1 | A10 | | |
| 1 | IO_L05_1/No_Pair | G10 | | |
| 1 | IO_L03N_1/VREF_1 | D10 | | |
| 1 | IO_L03P_1 | C10 | | |
| 1 | IO_L02N_1 | K11 | | |
| 1 | IO_L02P_1 | J11 | | |
| 1 | IO_L01N_1/VRP_1 | F10 | | |
| 1 | IO_L01P_1/VRN_1 | E10 | | |
| | | | | |
| 2 | IO_L01N_2/VRP_2 | B8 | | |
| 2 | IO_L01P_2/VRN_2 | B9 | | |
| 2 | IO_L02N_2 | C9 | | |

*Table 11:* **FF1148 — XC2VP40 and XC2VP50**

| Bank | Pin Description | Pin Number | No Connects | |
|---|---|---|---|---|
| | | | XC2VP40 | XC2VP50 |
| 2 | IO_L02P_2 | D9 | | |
| 2 | IO_L03N_2 | B7 | | |
| 2 | IO_L03P_2 | A7 | | |
| 2 | IO_L04N_2/VREF_2 | B6 | | |
| 2 | IO_L04P_2 | A6 | | |
| 2 | IO_L05N_2 | E8 | | |
| 2 | IO_L05P_2 | D8 | | |
| 2 | IO_L06N_2 | B4 | | |
| 2 | IO_L06P_2 | A4 | | |
| 2 | IO_L07N_2 | B3 | | |
| 2 | IO_L07P_2 | A3 | | |
| 2 | IO_L08N_2 | H7 | | |
| 2 | IO_L08P_2 | H8 | | |
| 2 | IO_L09N_2 | C6 | | |
| 2 | IO_L09P_2 | C7 | | |
| 2 | IO_L10N_2/VREF_2 | C5 | | |
| 2 | IO_L10P_2 | B5 | | |
| 2 | IO_L11N_2 | K8 | | |
| 2 | IO_L11P_2 | J8 | | |
| 2 | IO_L12N_2 | C1 | | |
| 2 | IO_L12P_2 | C2 | | |
| 2 | IO_L13N_2 | E7 | | |
| 2 | IO_L13P_2 | D7 | | |
| 2 | IO_L14N_2 | J6 | | |
| 2 | IO_L14P_2 | J7 | | |
| 2 | IO_L15N_2 | D5 | | |
| 2 | IO_L15P_2 | D6 | | |
| 2 | IO_L16N_2/VREF_2 | E4 | | |
| 2 | IO_L16P_2 | D4 | | |
| 2 | IO_L17N_2 | L9 | | |
| 2 | IO_L17P_2 | K9 | | |
| 2 | IO_L18N_2 | E3 | | |
| 2 | IO_L18P_2 | D3 | | |
| 2 | IO_L19N_2 | D1 | | |
| 2 | IO_L19P_2 | D2 | | |
| 2 | IO_L20N_2 | K7 | | |
| 2 | IO_L20P_2 | L7 | | |
| 2 | IO_L21N_2 | F6 | | |

*Table 11:* **FF1148 — XC2VP40 and XC2VP50**

| Bank | Pin Description | Pin Number | No Connects | |
|---|---|---|---|---|
| | | | XC2VP40 | XC2VP50 |
| 2 | IO_L21P_2 | E6 | | |
| 2 | IO_L22N_2/VREF_2 | F7 | | |
| 2 | IO_L22P_2 | F8 | | |
| 2 | IO_L23N_2 | M10 | | |
| 2 | IO_L23P_2 | L10 | | |
| 2 | IO_L24N_2 | G5 | | |
| 2 | IO_L24P_2 | F5 | | |
| 2 | IO_L25N_2 | F3 | | |
| 2 | IO_L25P_2 | F4 | | |
| 2 | IO_L26N_2 | M8 | | |
| 2 | IO_L26P_2 | M9 | | |
| 2 | IO_L27N_2 | F1 | | |
| 2 | IO_L27P_2 | F2 | | |
| 2 | IO_L28N_2/VREF_2 | G6 | | |
| 2 | IO_L28P_2 | G7 | | |
| 2 | IO_L29N_2 | M7 | | |
| 2 | IO_L29P_2 | N8 | | |
| 2 | IO_L30N_2 | G3 | | |
| 2 | IO_L30P_2 | H4 | | |
| 2 | IO_L31N_2 | G1 | | |
| 2 | IO_L31P_2 | G2 | | |
| 2 | IO_L32N_2 | N10 | | |
| 2 | IO_L32P_2 | N11 | | |
| 2 | IO_L33N_2 | H5 | | |
| 2 | IO_L33P_2 | H6 | | |
| 2 | IO_L34N_2/VREF_2 | H2 | | |
| 2 | IO_L34P_2 | H3 | | |
| 2 | IO_L35N_2 | N6 | | |
| 2 | IO_L35P_2 | N7 | | |
| 2 | IO_L36N_2 | K4 | | |
| 2 | IO_L36P_2 | J4 | | |
| 2 | IO_L37N_2 | J2 | | |
| 2 | IO_L37P_2 | J3 | | |
| 2 | IO_L38N_2 | P10 | | |
| 2 | IO_L38P_2 | P11 | | |
| 2 | IO_L39N_2 | K5 | | |
| 2 | IO_L39P_2 | K6 | | |
| 2 | IO_L40N_2/VREF_2 | L3 | | |

*Table 11:* **FF1148 — XC2VP40 and XC2VP50**

| Bank | Pin Description | Pin Number | No Connects | |
|---|---|---|---|---|
| | | | XC2VP40 | XC2VP50 |
| 2 | IO_L40P_2 | K3 | | |
| 2 | IO_L41N_2 | R9 | | |
| 2 | IO_L41P_2 | P9 | | |
| 2 | IO_L42N_2 | K1 | | |
| 2 | IO_L42P_2 | K2 | | |
| 2 | IO_L43N_2 | L5 | | |
| 2 | IO_L43P_2 | L6 | | |
| 2 | IO_L44N_2 | P7 | | |
| 2 | IO_L44P_2 | P8 | | |
| 2 | IO_L45N_2 | L1 | | |
| 2 | IO_L45P_2 | L2 | | |
| 2 | IO_L46N_2/VREF_2 | M5 | | |
| 2 | IO_L46P_2 | M6 | | |
| 2 | IO_L47N_2 | R10 | | |
| 2 | IO_L47P_2 | R11 | | |
| 2 | IO_L48N_2 | M3 | | |
| 2 | IO_L48P_2 | M4 | | |
| 2 | IO_L49N_2 | M1 | | |
| 2 | IO_L49P_2 | M2 | | |
| 2 | IO_L50N_2 | R7 | | |
| 2 | IO_L50P_2 | T8 | | |
| 2 | IO_L51N_2 | P4 | | |
| 2 | IO_L51P_2 | N4 | | |
| 2 | IO_L52N_2/VREF_2 | N2 | | |
| 2 | IO_L52P_2 | N3 | | |
| 2 | IO_L53N_2 | T10 | | |
| 2 | IO_L53P_2 | T11 | | |
| 2 | IO_L54N_2 | P5 | | |
| 2 | IO_L54P_2 | P6 | | |
| 2 | IO_L55N_2 | R3 | | |
| 2 | IO_L55P_2 | P3 | | |
| 2 | IO_L56N_2 | T6 | | |
| 2 | IO_L56P_2 | T7 | | |
| 2 | IO_L57N_2 | P1 | | |
| 2 | IO_L57P_2 | P2 | | |
| 2 | IO_L58N_2/VREF_2 | R5 | | |
| 2 | IO_L58P_2 | R6 | | |
| 2 | IO_L59N_2 | U10 | | |

*Table 11:* **FF1148 — XC2VP40 and XC2VP50**

| Bank | Pin Description | Pin Number | No Connects | |
|---|---|---|---|---|
| | | | XC2VP40 | XC2VP50 |
| 2 | IO_L59P_2 | U11 | | |
| 2 | IO_L60N_2 | R1 | | |
| 2 | IO_L60P_2 | R2 | | |
| 2 | IO_L85N_2 | T3 | | |
| 2 | IO_L85P_2 | T4 | | |
| 2 | IO_L86N_2 | U8 | | |
| 2 | IO_L86P_2 | U9 | | |
| 2 | IO_L87N_2 | U2 | | |
| 2 | IO_L87P_2 | T2 | | |
| 2 | IO_L88N_2/VREF_2 | U4 | | |
| 2 | IO_L88P_2 | U5 | | |
| 2 | IO_L89N_2 | U6 | | |
| 2 | IO_L89P_2 | U7 | | |
| 2 | IO_L90N_2 | V3 | | |
| 2 | IO_L90P_2 | U3 | | |
| | | | | |
| 3 | IO_L90N_3 | V6 | | |
| 3 | IO_L90P_3 | V7 | | |
| 3 | IO_L89N_3 | V10 | | |
| 3 | IO_L89P_3 | V11 | | |
| 3 | IO_L88N_3 | V4 | | |
| 3 | IO_L88P_3 | V5 | | |
| 3 | IO_L87N_3/VREF_3 | V2 | | |
| 3 | IO_L87P_3 | W2 | | |
| 3 | IO_L86N_3 | V8 | | |
| 3 | IO_L86P_3 | V9 | | |
| 3 | IO_L85N_3 | W6 | | |
| 3 | IO_L85P_3 | W7 | | |
| 3 | IO_L60N_3 | W3 | | |
| 3 | IO_L60P_3 | W4 | | |
| 3 | IO_L59N_3 | W10 | | |
| 3 | IO_L59P_3 | W11 | | |
| 3 | IO_L58N_3 | Y5 | | |
| 3 | IO_L58P_3 | Y6 | | |
| 3 | IO_L57N_3/VREF_3 | Y3 | | |
| 3 | IO_L57P_3 | AA3 | | |
| 3 | IO_L56N_3 | W8 | | |
| 3 | IO_L56P_3 | Y7 | | |

*Table 11:* **FF1148 — XC2VP40 and XC2VP50**

| Bank | Pin Description | Pin Number | No Connects | |
|---|---|---|---|---|
| | | | XC2VP40 | XC2VP50 |
| 3 | IO_L55N_3 | Y1 | | |
| 3 | IO_L55P_3 | Y2 | | |
| 3 | IO_L54N_3 | AA5 | | |
| 3 | IO_L54P_3 | AA6 | | |
| 3 | IO_L53N_3 | Y10 | | |
| 3 | IO_L53P_3 | Y11 | | |
| 3 | IO_L52N_3 | AA4 | | |
| 3 | IO_L52P_3 | AB4 | | |
| 3 | IO_L51N_3/VREF_3 | AA1 | | |
| 3 | IO_L51P_3 | AA2 | | |
| 3 | IO_L50N_3 | Y9 | | |
| 3 | IO_L50P_3 | AA9 | | |
| 3 | IO_L49N_3 | AB6 | | |
| 3 | IO_L49P_3 | AB7 | | |
| 3 | IO_L48N_3 | AB2 | | |
| 3 | IO_L48P_3 | AB3 | | |
| 3 | IO_L47N_3 | AA10 | | |
| 3 | IO_L47P_3 | AA11 | | |
| 3 | IO_L46N_3 | AC5 | | |
| 3 | IO_L46P_3 | AC6 | | |
| 3 | IO_L45N_3/VREF_3 | AC3 | | |
| 3 | IO_L45P_3 | AC4 | | |
| 3 | IO_L44N_3 | AA7 | | |
| 3 | IO_L44P_3 | AA8 | | |
| 3 | IO_L43N_3 | AC1 | | |
| 3 | IO_L43P_3 | AC2 | | |
| 3 | IO_L42N_3 | AD5 | | |
| 3 | IO_L42P_3 | AD6 | | |
| 3 | IO_L41N_3 | AB10 | | |
| 3 | IO_L41P_3 | AB11 | | |
| 3 | IO_L40N_3 | AD3 | | |
| 3 | IO_L40P_3 | AE3 | | |
| 3 | IO_L39N_3/VREF_3 | AD1 | | |
| 3 | IO_L39P_3 | AD2 | | |
| 3 | IO_L38N_3 | AB8 | | |
| 3 | IO_L38P_3 | AC7 | | |
| 3 | IO_L37N_3 | AE5 | | |
| 3 | IO_L37P_3 | AE6 | | |

*Table 11:* **FF1148 — XC2VP40 and XC2VP50**

| Bank | Pin Description | Pin Number | No Connects | |
|---|---|---|---|---|
| | | | XC2VP40 | XC2VP50 |
| 3 | IO_L36N_3 | AE4 | | |
| 3 | IO_L36P_3 | AF4 | | |
| 3 | IO_L35N_3 | AC10 | | |
| 3 | IO_L35P_3 | AD10 | | |
| 3 | IO_L34N_3 | AE1 | | |
| 3 | IO_L34P_3 | AE2 | | |
| 3 | IO_L33N_3/VREF_3 | AF6 | | |
| 3 | IO_L33P_3 | AF7 | | |
| 3 | IO_L32N_3 | AC8 | | |
| 3 | IO_L32P_3 | AC9 | | |
| 3 | IO_L31N_3 | AF2 | | |
| 3 | IO_L31P_3 | AF3 | | |
| 3 | IO_L30N_3 | AG5 | | |
| 3 | IO_L30P_3 | AG6 | | |
| 3 | IO_L29N_3 | AD9 | | |
| 3 | IO_L29P_3 | AE9 | | |
| 3 | IO_L28N_3 | AG4 | | |
| 3 | IO_L28P_3 | AH3 | | |
| 3 | IO_L27N_3/VREF_3 | AG2 | | |
| 3 | IO_L27P_3 | AG3 | | |
| 3 | IO_L26N_3 | AD7 | | |
| 3 | IO_L26P_3 | AE7 | | |
| 3 | IO_L25N_3 | AH6 | | |
| 3 | IO_L25P_3 | AH7 | | |
| 3 | IO_L24N_3 | AH5 | | |
| 3 | IO_L24P_3 | AJ5 | | |
| 3 | IO_L23N_3 | AE8 | | |
| 3 | IO_L23P_3 | AF8 | | |
| 3 | IO_L22N_3 | AH1 | | |
| 3 | IO_L22P_3 | AH2 | | |
| 3 | IO_L21N_3/VREF_3 | AJ6 | | |
| 3 | IO_L21P_3 | AK6 | | |
| 3 | IO_L20N_3 | AG7 | | |
| 3 | IO_L20P_3 | AG8 | | |
| 3 | IO_L19N_3 | AJ3 | | |
| 3 | IO_L19P_3 | AJ4 | | |
| 3 | IO_L18N_3 | AJ1 | | |
| 3 | IO_L18P_3 | AJ2 | | |

*Table 11:* **FF1148 — XC2VP40 and XC2VP50**

| Bank | Pin Description | Pin Number | No Connects | |
|---|---|---|---|---|
| | | | XC2VP40 | XC2VP50 |
| 3 | IO_L17N_3 | AH9 | | |
| 3 | IO_L17P_3 | AJ9 | | |
| 3 | IO_L16N_3 | AK7 | | |
| 3 | IO_L16P_3 | AL7 | | |
| 3 | IO_L15N_3/VREF_3 | AK4 | | |
| 3 | IO_L15P_3 | AL4 | | |
| 3 | IO_L14N_3 | AJ7 | | |
| 3 | IO_L14P_3 | AJ8 | | |
| 3 | IO_L13N_3 | AK3 | | |
| 3 | IO_L13P_3 | AL3 | | |
| 3 | IO_L12N_3 | AL5 | | |
| 3 | IO_L12P_3 | AL6 | | |
| 3 | IO_L11N_3 | AK8 | | |
| 3 | IO_L11P_3 | AL8 | | |
| 3 | IO_L10N_3 | AL1 | | |
| 3 | IO_L10P_3 | AL2 | | |
| 3 | IO_L09N_3/VREF_3 | AM6 | | |
| 3 | IO_L09P_3 | AM7 | | |
| 3 | IO_L08N_3 | AL9 | | |
| 3 | IO_L08P_3 | AM9 | | |
| 3 | IO_L07N_3 | AM5 | | |
| 3 | IO_L07P_3 | AN5 | | |
| 3 | IO_L06N_3 | AM1 | | |
| 3 | IO_L06P_3 | AM2 | | |
| 3 | IO_L05N_3 | AN8 | | |
| 3 | IO_L05P_3 | AN9 | | |
| 3 | IO_L04N_3 | AN6 | | |
| 3 | IO_L04P_3 | AP6 | | |
| 3 | IO_L03N_3/VREF_3 | AN4 | | |
| 3 | IO_L03P_3 | AP4 | | |
| 3 | IO_L02N_3 | AN7 | | |
| 3 | IO_L02P_3 | AP7 | | |
| 3 | IO_L01N_3/VRP_3 | AN3 | | |
| 3 | IO_L01P_3/VRN_3 | AP3 | | |
| | | | | |
| 4 | IO_L01N_4/BUSY/DOUT(1) | AK10 | | |
| 4 | IO_L01P_4/INIT_B | AJ10 | | |
| 4 | IO_L02N_4/D0/DIN(1) | AF11 | | |

*Table 11:* **FF1148 — XC2VP40 and XC2VP50**

| Bank | Pin Description | Pin Number | No Connects | |
|---|---|---|---|---|
| | | | XC2VP40 | XC2VP50 |
| 4 | IO_L02P_4/D1 | AE11 | | |
| 4 | IO_L03N_4/D2 | AM10 | | |
| 4 | IO_L03P_4/D3 | AL10 | | |
| 4 | IO_L05_4/No_Pair | AH10 | | |
| 4 | IO_L06N_4/VRP_4 | AP10 | | |
| 4 | IO_L06P_4/VRN_4 | AN10 | | |
| 4 | IO_L07N_4 | AH11 | | |
| 4 | IO_L07P_4/VREF_4 | AH12 | | |
| 4 | IO_L08N_4 | AG12 | | |
| 4 | IO_L08P_4 | AG13 | | |
| 4 | IO_L09N_4 | AK11 | | |
| 4 | IO_L09P_4/VREF_4 | AJ11 | | |
| 4 | IO_L19N_4 | AM11 | | |
| 4 | IO_L19P_4 | AM12 | | |
| 4 | IO_L20N_4 | AF12 | | |
| 4 | IO_L20P_4 | AE12 | | |
| 4 | IO_L21N_4 | AP11 | | |
| 4 | IO_L21P_4 | AN11 | | |
| 4 | IO_L25N_4 | AK12 | | |
| 4 | IO_L25P_4 | AJ12 | | |
| 4 | IO_L26N_4 | AE13 | | |
| 4 | IO_L26P_4 | AD13 | | |
| 4 | IO_L27N_4 | AL12 | | |
| 4 | IO_L27P_4/VREF_4 | AL13 | | |
| 4 | IO_L37N_4 | AP12 | | |
| 4 | IO_L37P_4 | AN12 | | |
| 4 | IO_L38N_4 | AF14 | | |
| 4 | IO_L38P_4 | AF15 | | |
| 4 | IO_L39N_4 | AJ13 | | |
| 4 | IO_L39P_4 | AH13 | | |
| 4 | IO_L43N_4 | AN13 | | |
| 4 | IO_L43P_4 | AM13 | | |
| 4 | IO_L44N_4 | AE14 | | |
| 4 | IO_L44P_4 | AD14 | | |
| 4 | IO_L45N_4 | AH14 | | |
| 4 | IO_L45P_4/VREF_4 | AG14 | | |
| 4 | IO_L46N_4 | AK14 | | |
| 4 | IO_L46P_4 | AJ14 | | |

*Table 11:* **FF1148 — XC2VP40 and XC2VP50**

| Bank | Pin Description | Pin Number | No Connects | |
|---|---|---|---|---|
| | | | XC2VP40 | XC2VP50 |
| 4 | IO_L47N_4 | AE15 | | |
| 4 | IO_L47P_4 | AD15 | | |
| 4 | IO_L48N_4 | AM14 | | |
| 4 | IO_L48P_4 | AL14 | | |
| 4 | IO_L49N_4 | AP14 | | |
| 4 | IO_L49P_4 | AN14 | | |
| 4 | IO_L50_4/No_Pair | AH15 | | |
| 4 | IO_L53_4/No_Pair | AG16 | | |
| 4 | IO_L54N_4 | AK15 | | |
| 4 | IO_L54P_4 | AJ15 | | |
| 4 | IO_L55N_4 | AM15 | | |
| 4 | IO_L55P_4 | AL16 | | |
| 4 | IO_L56N_4 | AE16 | | |
| 4 | IO_L56P_4 | AD16 | | |
| 4 | IO_L57N_4 | AP15 | | |
| 4 | IO_L57P_4/VREF_4 | AN15 | | |
| 4 | IO_L66N_4 | AJ16 | NC | |
| 4 | IO_L66P_4/VREF_4 | AH16 | NC | |
| 4 | IO_L67N_4 | AN16 | | |
| 4 | IO_L67P_4 | AM16 | | |
| 4 | IO_L68N_4 | AG17 | | |
| 4 | IO_L68P_4 | AF17 | | |
| 4 | IO_L69N_4 | AJ17 | | |
| 4 | IO_L69P_4/VREF_4 | AH17 | | |
| 4 | IO_L73N_4 | AL17 | | |
| 4 | IO_L73P_4 | AK17 | | |
| 4 | IO_L74N_4/GCLK3S | AE17 | | |
| 4 | IO_L74P_4/GCLK2P | AD17 | | |
| 4 | IO_L75N_4/GCLK1S | AN17 | | |
| 4 | IO_L75P_4/GCLK0P | AM17 | | |
| | | | | |
| 5 | IO_L75N_5/GCLK7S | AM18 | | |
| 5 | IO_L75P_5/GCLK6P | AN18 | | |
| 5 | IO_L74N_5/GCLK5S | AD18 | | |
| 5 | IO_L74P_5/GCLK4P | AE18 | | |
| 5 | IO_L73N_5 | AK18 | | |
| 5 | IO_L73P_5 | AL18 | | |
| 5 | IO_L69N_5/VREF_5 | AH18 | | |

*Table 11:* **FF1148 — XC2VP40 and XC2VP50**

| Bank | Pin Description | Pin Number | No Connects | |
|---|---|---|---|---|
| | | | XC2VP40 | XC2VP50 |
| 5 | IO_L69P_5 | AJ18 | | |
| 5 | IO_L68N_5 | AF18 | | |
| 5 | IO_L68P_5 | AG18 | | |
| 5 | IO_L67N_5 | AM19 | | |
| 5 | IO_L67P_5 | AN19 | | |
| 5 | IO_L66N_5/VREF_5 | AH19 | NC | |
| 5 | IO_L66P_5 | AJ19 | NC | |
| 5 | IO_L57N_5/VREF_5 | AN20 | | |
| 5 | IO_L57P_5 | AP20 | | |
| 5 | IO_L56N_5 | AD19 | | |
| 5 | IO_L56P_5 | AE19 | | |
| 5 | IO_L55N_5 | AL19 | | |
| 5 | IO_L55P_5 | AM20 | | |
| 5 | IO_L54N_5 | AJ20 | | |
| 5 | IO_L54P_5 | AK20 | | |
| 5 | IO_L53_5/No_Pair | AG19 | | |
| 5 | IO_L50_5/No_Pair | AH20 | | |
| 5 | IO_L49N_5 | AN21 | | |
| 5 | IO_L49P_5 | AP21 | | |
| 5 | IO_L48N_5 | AL21 | | |
| 5 | IO_L48P_5 | AM21 | | |
| 5 | IO_L47N_5 | AD20 | | |
| 5 | IO_L47P_5 | AE20 | | |
| 5 | IO_L46N_5 | AJ21 | | |
| 5 | IO_L46P_5 | AK21 | | |
| 5 | IO_L45N_5/VREF_5 | AG21 | | |
| 5 | IO_L45P_5 | AH21 | | |
| 5 | IO_L44N_5 | AD21 | | |
| 5 | IO_L44P_5 | AE21 | | |
| 5 | IO_L43N_5 | AM22 | | |
| 5 | IO_L43P_5 | AN22 | | |
| 5 | IO_L39N_5 | AH22 | | |
| 5 | IO_L39P_5 | AJ22 | | |
| 5 | IO_L38N_5 | AF20 | | |
| 5 | IO_L38P_5 | AF21 | | |
| 5 | IO_L37N_5 | AN23 | | |
| 5 | IO_L37P_5 | AP23 | | |
| 5 | IO_L27N_5/VREF_5 | AL22 | | |

*Table 11:* **FF1148 — XC2VP40 and XC2VP50**

| Bank | Pin Description | Pin Number | No Connects | |
|---|---|---|---|---|
| | | | XC2VP40 | XC2VP50 |
| 5 | IO_L27P_5 | AL23 | | |
| 5 | IO_L26N_5 | AD22 | | |
| 5 | IO_L26P_5 | AE22 | | |
| 5 | IO_L25N_5 | AJ23 | | |
| 5 | IO_L25P_5 | AK23 | | |
| 5 | IO_L21N_5 | AN24 | | |
| 5 | IO_L21P_5 | AP24 | | |
| 5 | IO_L20N_5 | AE23 | | |
| 5 | IO_L20P_5 | AF23 | | |
| 5 | IO_L19N_5 | AM23 | | |
| 5 | IO_L19P_5 | AM24 | | |
| 5 | IO_L09N_5/VREF_5 | AJ24 | | |
| 5 | IO_L09P_5 | AK24 | | |
| 5 | IO_L08N_5 | AG22 | | |
| 5 | IO_L08P_5 | AG23 | | |
| 5 | IO_L07N_5/VREF_5 | AH23 | | |
| 5 | IO_L07P_5 | AH24 | | |
| 5 | IO_L06N_5/VRP_5 | AN25 | | |
| 5 | IO_L06P_5/VRN_5 | AP25 | | |
| 5 | IO_L05_5/No_Pair | AH25 | | |
| 5 | IO_L03N_5/D4 | AL25 | | |
| 5 | IO_L03P_5/D5 | AM25 | | |
| 5 | IO_L02N_5/D6 | AE24 | | |
| 5 | IO_L02P_5/D7 | AF24 | | |
| 5 | IO_L01N_5/RDWR_B | AJ25 | | |
| 5 | IO_L01P_5/CS_B | AK25 | | |
| | | | | |
| 6 | IO_L01P_6/VRN_6 | AP32 | | |
| 6 | IO_L01N_6/VRP_6 | AN32 | | |
| 6 | IO_L02P_6 | AP28 | | |
| 6 | IO_L02N_6 | AN28 | | |
| 6 | IO_L03P_6 | AP31 | | |
| 6 | IO_L03N_6/VREF_6 | AN31 | | |
| 6 | IO_L04P_6 | AP29 | | |
| 6 | IO_L04N_6 | AN29 | | |
| 6 | IO_L05P_6 | AN26 | | |
| 6 | IO_L05N_6 | AN27 | | |
| 6 | IO_L06P_6 | AM33 | | |

*Table 11:* **FF1148 — XC2VP40 and XC2VP50**

| Bank | Pin Description | Pin Number | No Connects | |
|---|---|---|---|---|
| | | | XC2VP40 | XC2VP50 |
| 6 | IO_L06N_6 | AM34 | | |
| 6 | IO_L07P_6 | AN30 | | |
| 6 | IO_L07N_6 | AM30 | | |
| 6 | IO_L08P_6 | AM26 | | |
| 6 | IO_L08N_6 | AL26 | | |
| 6 | IO_L09P_6 | AM28 | | |
| 6 | IO_L09N_6/VREF_6 | AM29 | | |
| 6 | IO_L10P_6 | AL33 | | |
| 6 | IO_L10N_6 | AL34 | | |
| 6 | IO_L11P_6 | AL27 | | |
| 6 | IO_L11N_6 | AK27 | | |
| 6 | IO_L12P_6 | AL29 | | |
| 6 | IO_L12N_6 | AL30 | | |
| 6 | IO_L13P_6 | AL32 | | |
| 6 | IO_L13N_6 | AK32 | | |
| 6 | IO_L14P_6 | AJ27 | | |
| 6 | IO_L14N_6 | AJ28 | | |
| 6 | IO_L15P_6 | AL31 | | |
| 6 | IO_L15N_6/VREF_6 | AK31 | | |
| 6 | IO_L16P_6 | AL28 | | |
| 6 | IO_L16N_6 | AK28 | | |
| 6 | IO_L17P_6 | AJ26 | | |
| 6 | IO_L17N_6 | AH26 | | |
| 6 | IO_L18P_6 | AJ33 | | |
| 6 | IO_L18N_6 | AJ34 | | |
| 6 | IO_L19P_6 | AJ31 | | |
| 6 | IO_L19N_6 | AJ32 | | |
| 6 | IO_L20P_6 | AG27 | | |
| 6 | IO_L20N_6 | AG28 | | |
| 6 | IO_L21P_6 | AK29 | | |
| 6 | IO_L21N_6/VREF_6 | AJ29 | | |
| 6 | IO_L22P_6 | AH33 | | |
| 6 | IO_L22N_6 | AH34 | | |
| 6 | IO_L23P_6 | AF27 | | |
| 6 | IO_L23N_6 | AE27 | | |
| 6 | IO_L24P_6 | AJ30 | | |
| 6 | IO_L24N_6 | AH30 | | |
| 6 | IO_L25P_6 | AH28 | | |

*Table 11:* **FF1148 — XC2VP40 and XC2VP50**

| Bank | Pin Description | Pin Number | No Connects | |
|---|---|---|---|---|
| | | | XC2VP40 | XC2VP50 |
| 6 | IO_L25N_6 | AH29 | | |
| 6 | IO_L26P_6 | AE28 | | |
| 6 | IO_L26N_6 | AD28 | | |
| 6 | IO_L27P_6 | AG32 | | |
| 6 | IO_L27N_6/VREF_6 | AG33 | | |
| 6 | IO_L28P_6 | AH32 | | |
| 6 | IO_L28N_6 | AG31 | | |
| 6 | IO_L29P_6 | AE26 | | |
| 6 | IO_L29N_6 | AD26 | | |
| 6 | IO_L30P_6 | AG29 | | |
| 6 | IO_L30N_6 | AG30 | | |
| 6 | IO_L31P_6 | AF32 | | |
| 6 | IO_L31N_6 | AF33 | | |
| 6 | IO_L32P_6 | AC26 | | |
| 6 | IO_L32N_6 | AC27 | | |
| 6 | IO_L33P_6 | AF28 | | |
| 6 | IO_L33N_6/VREF_6 | AF29 | | |
| 6 | IO_L34P_6 | AE33 | | |
| 6 | IO_L34N_6 | AE34 | | |
| 6 | IO_L35P_6 | AD25 | | |
| 6 | IO_L35N_6 | AC25 | | |
| 6 | IO_L36P_6 | AF31 | | |
| 6 | IO_L36N_6 | AE31 | | |
| 6 | IO_L37P_6 | AE29 | | |
| 6 | IO_L37N_6 | AE30 | | |
| 6 | IO_L38P_6 | AC28 | | |
| 6 | IO_L38N_6 | AB27 | | |
| 6 | IO_L39P_6 | AD33 | | |
| 6 | IO_L39N_6/VREF_6 | AD34 | | |
| 6 | IO_L40P_6 | AE32 | | |
| 6 | IO_L40N_6 | AD32 | | |
| 6 | IO_L41P_6 | AB24 | | |
| 6 | IO_L41N_6 | AB25 | | |
| 6 | IO_L42P_6 | AD29 | | |
| 6 | IO_L42N_6 | AD30 | | |
| 6 | IO_L43P_6 | AC33 | | |
| 6 | IO_L43N_6 | AC34 | | |
| 6 | IO_L44P_6 | AA27 | | |

*Table 11:* **FF1148 — XC2VP40 and XC2VP50**

| Bank | Pin Description | Pin Number | No Connects | |
|---|---|---|---|---|
| | | | XC2VP40 | XC2VP50 |
| 6 | IO_L44N_6 | AA28 | | |
| 6 | IO_L45P_6 | AC31 | | |
| 6 | IO_L45N_6/VREF_6 | AC32 | | |
| 6 | IO_L46P_6 | AC29 | | |
| 6 | IO_L46N_6 | AC30 | | |
| 6 | IO_L47P_6 | AA24 | | |
| 6 | IO_L47N_6 | AA25 | | |
| 6 | IO_L48P_6 | AB32 | | |
| 6 | IO_L48N_6 | AB33 | | |
| 6 | IO_L49P_6 | AB28 | | |
| 6 | IO_L49N_6 | AB29 | | |
| 6 | IO_L50P_6 | AA26 | | |
| 6 | IO_L50N_6 | Y26 | | |
| 6 | IO_L51P_6 | AA33 | | |
| 6 | IO_L51N_6/VREF_6 | AA34 | | |
| 6 | IO_L52P_6 | AB31 | | |
| 6 | IO_L52N_6 | AA31 | | |
| 6 | IO_L53P_6 | Y24 | | |
| 6 | IO_L53N_6 | Y25 | | |
| 6 | IO_L54P_6 | AA29 | | |
| 6 | IO_L54N_6 | AA30 | | |
| 6 | IO_L55P_6 | Y33 | | |
| 6 | IO_L55N_6 | Y34 | | |
| 6 | IO_L56P_6 | Y28 | | |
| 6 | IO_L56N_6 | W27 | | |
| 6 | IO_L57P_6 | AA32 | | |
| 6 | IO_L57N_6/VREF_6 | Y32 | | |
| 6 | IO_L58P_6 | Y29 | | |
| 6 | IO_L58N_6 | Y30 | | |
| 6 | IO_L59P_6 | W24 | | |
| 6 | IO_L59N_6 | W25 | | |
| 6 | IO_L60P_6 | W31 | | |
| 6 | IO_L60N_6 | W32 | | |
| 6 | IO_L85P_6 | W28 | | |
| 6 | IO_L85N_6 | W29 | | |
| 6 | IO_L86P_6 | V26 | | |
| 6 | IO_L86N_6 | V27 | | |
| 6 | IO_L87P_6 | W33 | | |

*Table 11:* **FF1148 — XC2VP40 and XC2VP50**

| Bank | Pin Description | Pin Number | No Connects | |
|---|---|---|---|---|
| | | | XC2VP40 | XC2VP50 |
| 6 | IO_L87N_6/VREF_6 | V33 | | |
| 6 | IO_L88P_6 | V30 | | |
| 6 | IO_L88N_6 | V31 | | |
| 6 | IO_L89P_6 | V24 | | |
| 6 | IO_L89N_6 | V25 | | |
| 6 | IO_L90P_6 | V28 | | |
| 6 | IO_L90N_6 | V29 | | |
| | | | | |
| 7 | IO_L90P_7 | U32 | | |
| 7 | IO_L90N_7 | V32 | | |
| 7 | IO_L89P_7 | U28 | | |
| 7 | IO_L89N_7 | U29 | | |
| 7 | IO_L88P_7 | U30 | | |
| 7 | IO_L88N_7/VREF_7 | U31 | | |
| 7 | IO_L87P_7 | T33 | | |
| 7 | IO_L87N_7 | U33 | | |
| 7 | IO_L86P_7 | U26 | | |
| 7 | IO_L86N_7 | U27 | | |
| 7 | IO_L85P_7 | T31 | | |
| 7 | IO_L85N_7 | T32 | | |
| 7 | IO_L60P_7 | R33 | | |
| 7 | IO_L60N_7 | R34 | | |
| 7 | IO_L59P_7 | U24 | | |
| 7 | IO_L59N_7 | U25 | | |
| 7 | IO_L58P_7 | R29 | | |
| 7 | IO_L58N_7/VREF_7 | R30 | | |
| 7 | IO_L57P_7 | P33 | | |
| 7 | IO_L57N_7 | P34 | | |
| 7 | IO_L56P_7 | T28 | | |
| 7 | IO_L56N_7 | T29 | | |
| 7 | IO_L55P_7 | P32 | | |
| 7 | IO_L55N_7 | R32 | | |
| 7 | IO_L54P_7 | P29 | | |
| 7 | IO_L54N_7 | P30 | | |
| 7 | IO_L53P_7 | T24 | | |
| 7 | IO_L53N_7 | T25 | | |
| 7 | IO_L52P_7 | N32 | | |
| 7 | IO_L52N_7/VREF_7 | N33 | | |

*Table 11:* **FF1148 — XC2VP40 and XC2VP50**

| Bank | Pin Description | Pin Number | No Connects | |
|---|---|---|---|---|
| | | | XC2VP40 | XC2VP50 |
| 7 | IO_L51P_7 | N31 | | |
| 7 | IO_L51N_7 | P31 | | |
| 7 | IO_L50P_7 | T27 | | |
| 7 | IO_L50N_7 | R28 | | |
| 7 | IO_L49P_7 | M33 | | |
| 7 | IO_L49N_7 | M34 | | |
| 7 | IO_L48P_7 | M31 | | |
| 7 | IO_L48N_7 | M32 | | |
| 7 | IO_L47P_7 | R24 | | |
| 7 | IO_L47N_7 | R25 | | |
| 7 | IO_L46P_7 | M29 | | |
| 7 | IO_L46N_7/VREF_7 | M30 | | |
| 7 | IO_L45P_7 | L33 | | |
| 7 | IO_L45N_7 | L34 | | |
| 7 | IO_L44P_7 | P27 | | |
| 7 | IO_L44N_7 | P28 | | |
| 7 | IO_L43P_7 | L29 | | |
| 7 | IO_L43N_7 | L30 | | |
| 7 | IO_L42P_7 | K33 | | |
| 7 | IO_L42N_7 | K34 | | |
| 7 | IO_L41P_7 | P26 | | |
| 7 | IO_L41N_7 | R26 | | |
| 7 | IO_L40P_7 | K32 | | |
| 7 | IO_L40N_7/VREF_7 | L32 | | |
| 7 | IO_L39P_7 | K29 | | |
| 7 | IO_L39N_7 | K30 | | |
| 7 | IO_L38P_7 | P24 | | |
| 7 | IO_L38N_7 | P25 | | |
| 7 | IO_L37P_7 | J32 | | |
| 7 | IO_L37N_7 | J33 | | |
| 7 | IO_L36P_7 | J31 | | |
| 7 | IO_L36N_7 | K31 | | |
| 7 | IO_L35P_7 | N28 | | |
| 7 | IO_L35N_7 | N29 | | |
| 7 | IO_L34P_7 | H32 | | |
| 7 | IO_L34N_7/VREF_7 | H33 | | |
| 7 | IO_L33P_7 | H29 | | |
| 7 | IO_L33N_7 | H30 | | |

*Table 11:* **FF1148 — XC2VP40 and XC2VP50**

| Bank | Pin Description | Pin Number | No Connects | |
|---|---|---|---|---|
| | | | XC2VP40 | XC2VP50 |
| 7 | IO_L32P_7 | N24 | | |
| 7 | IO_L32N_7 | N25 | | |
| 7 | IO_L31P_7 | G33 | | |
| 7 | IO_L31N_7 | G34 | | |
| 7 | IO_L30P_7 | H31 | | |
| 7 | IO_L30N_7 | G32 | | |
| 7 | IO_L29P_7 | N27 | | |
| 7 | IO_L29N_7 | M28 | | |
| 7 | IO_L28P_7 | G28 | | |
| 7 | IO_L28N_7/VREF_7 | G29 | | |
| 7 | IO_L27P_7 | F33 | | |
| 7 | IO_L27N_7 | F34 | | |
| 7 | IO_L26P_7 | M26 | | |
| 7 | IO_L26N_7 | M27 | | |
| 7 | IO_L25P_7 | F31 | | |
| 7 | IO_L25N_7 | F32 | | |
| 7 | IO_L24P_7 | F30 | | |
| 7 | IO_L24N_7 | G30 | | |
| 7 | IO_L23P_7 | L25 | | |
| 7 | IO_L23N_7 | M25 | | |
| 7 | IO_L22P_7 | F27 | | |
| 7 | IO_L22N_7/VREF_7 | F28 | | |
| 7 | IO_L21P_7 | E29 | | |
| 7 | IO_L21N_7 | F29 | | |
| 7 | IO_L20P_7 | L28 | | |
| 7 | IO_L20N_7 | K28 | | |
| 7 | IO_L19P_7 | D33 | | |
| 7 | IO_L19N_7 | D34 | | |
| 7 | IO_L18P_7 | D32 | | |
| 7 | IO_L18N_7 | E32 | | |
| 7 | IO_L17P_7 | K26 | | |
| 7 | IO_L17N_7 | L26 | | |
| 7 | IO_L16P_7 | D31 | | |
| 7 | IO_L16N_7/VREF_7 | E31 | | |
| 7 | IO_L15P_7 | D29 | | |
| 7 | IO_L15N_7 | D30 | | |
| 7 | IO_L14P_7 | J28 | | |
| 7 | IO_L14N_7 | J29 | | |

*Table 11:* **FF1148 — XC2VP40 and XC2VP50**

| Bank | Pin Description | Pin Number | No Connects | |
|---|---|---|---|---|
| | | | XC2VP40 | XC2VP50 |
| 7 | IO_L13P_7 | D28 | | |
| 7 | IO_L13N_7 | E28 | | |
| 7 | IO_L12P_7 | C33 | | |
| 7 | IO_L12N_7 | C34 | | |
| 7 | IO_L11P_7 | J27 | | |
| 7 | IO_L11N_7 | K27 | | |
| 7 | IO_L10P_7 | B30 | | |
| 7 | IO_L10N_7/VREF_7 | C30 | | |
| 7 | IO_L09P_7 | C28 | | |
| 7 | IO_L09N_7 | C29 | | |
| 7 | IO_L08P_7 | H27 | | |
| 7 | IO_L08N_7 | H28 | | |
| 7 | IO_L07P_7 | A32 | | |
| 7 | IO_L07N_7 | B32 | | |
| 7 | IO_L06P_7 | A31 | | |
| 7 | IO_L06N_7 | B31 | | |
| 7 | IO_L05P_7 | D27 | | |
| 7 | IO_L05N_7 | E27 | | |
| 7 | IO_L04P_7 | A29 | | |
| 7 | IO_L04N_7/VREF_7 | B29 | | |
| 7 | IO_L03P_7 | A28 | | |
| 7 | IO_L03N_7 | B28 | | |
| 7 | IO_L02P_7 | D26 | | |
| 7 | IO_L02N_7 | C26 | | |
| 7 | IO_L01P_7/VRN_7 | B26 | | |
| 7 | IO_L01N_7/VRP_7 | B27 | | |
| | | | | |
| 7 | VCCO_7 | E33 | | |
| 7 | VCCO_7 | R31 | | |
| 7 | VCCO_7 | L31 | | |
| 7 | VCCO_7 | G31 | | |
| 7 | VCCO_7 | C31 | | |
| 7 | VCCO_7 | R27 | | |
| 7 | VCCO_7 | L27 | | |
| 7 | VCCO_7 | G27 | | |
| 7 | VCCO_7 | C27 | | |
| 7 | VCCO_7 | J26 | | |
| 7 | VCCO_7 | M24 | | |

*Table 11:* **FF1148 — XC2VP40 and XC2VP50**

| Bank | Pin Description | Pin Number | No Connects | |
|---|---|---|---|---|
| | | | XC2VP40 | XC2VP50 |
| 7 | VCCO_7 | U23 | | |
| 7 | VCCO_7 | T23 | | |
| 7 | VCCO_7 | R23 | | |
| 7 | VCCO_7 | P23 | | |
| 7 | VCCO_7 | N23 | | |
| 6 | VCCO_6 | AK33 | | |
| 6 | VCCO_6 | AM31 | | |
| 6 | VCCO_6 | AH31 | | |
| 6 | VCCO_6 | AD31 | | |
| 6 | VCCO_6 | Y31 | | |
| 6 | VCCO_6 | AM27 | | |
| 6 | VCCO_6 | AH27 | | |
| 6 | VCCO_6 | AD27 | | |
| 6 | VCCO_6 | Y27 | | |
| 6 | VCCO_6 | AF26 | | |
| 6 | VCCO_6 | AC24 | | |
| 6 | VCCO_6 | AB23 | | |
| 6 | VCCO_6 | AA23 | | |
| 6 | VCCO_6 | Y23 | | |
| 6 | VCCO_6 | W23 | | |
| 6 | VCCO_6 | V23 | | |
| 5 | VCCO_5 | AL24 | | |
| 5 | VCCO_5 | AG24 | | |
| 5 | VCCO_5 | AD23 | | |
| 5 | VCCO_5 | AC22 | | |
| 5 | VCCO_5 | AC21 | | |
| 5 | VCCO_5 | AL20 | | |
| 5 | VCCO_5 | AG20 | | |
| 5 | VCCO_5 | AC20 | | |
| 5 | VCCO_5 | AC19 | | |
| 5 | VCCO_5 | AC18 | | |
| 4 | VCCO_4 | AC17 | | |
| 4 | VCCO_4 | AC16 | | |
| 4 | VCCO_4 | AL15 | | |
| 4 | VCCO_4 | AG15 | | |
| 4 | VCCO_4 | AC15 | | |
| 4 | VCCO_4 | AC14 | | |
| 4 | VCCO_4 | AC13 | | |

*Table 11:* **FF1148 — XC2VP40 and XC2VP50**

| Bank | Pin Description | Pin Number | No Connects | |
|---|---|---|---|---|
| | | | XC2VP40 | XC2VP50 |
| 4 | VCCO_4 | AD12 | | |
| 4 | VCCO_4 | AL11 | | |
| 4 | VCCO_4 | AG11 | | |
| 3 | VCCO_3 | AB12 | | |
| 3 | VCCO_3 | AA12 | | |
| 3 | VCCO_3 | Y12 | | |
| 3 | VCCO_3 | W12 | | |
| 3 | VCCO_3 | V12 | | |
| 3 | VCCO_3 | AC11 | | |
| 3 | VCCO_3 | AF9 | | |
| 3 | VCCO_3 | AM8 | | |
| 3 | VCCO_3 | AH8 | | |
| 3 | VCCO_3 | AD8 | | |
| 3 | VCCO_3 | Y8 | | |
| 3 | VCCO_3 | AM4 | | |
| 3 | VCCO_3 | AH4 | | |
| 3 | VCCO_3 | AD4 | | |
| 3 | VCCO_3 | Y4 | | |
| 3 | VCCO_3 | AK2 | | |
| 2 | VCCO_2 | U12 | | |
| 2 | VCCO_2 | T12 | | |
| 2 | VCCO_2 | R12 | | |
| 2 | VCCO_2 | P12 | | |
| 2 | VCCO_2 | N12 | | |
| 2 | VCCO_2 | M11 | | |
| 2 | VCCO_2 | J9 | | |
| 2 | VCCO_2 | R8 | | |
| 2 | VCCO_2 | L8 | | |
| 2 | VCCO_2 | G8 | | |
| 2 | VCCO_2 | C8 | | |
| 2 | VCCO_2 | R4 | | |
| 2 | VCCO_2 | L4 | | |
| 2 | VCCO_2 | G4 | | |
| 2 | VCCO_2 | C4 | | |
| 2 | VCCO_2 | E2 | | |
| 1 | VCCO_1 | M17 | | |
| 1 | VCCO_1 | M16 | | |
| 1 | VCCO_1 | M15 | | |

*Table 11:* **FF1148 — XC2VP40 and XC2VP50**

| Bank | Pin Description | Pin Number | No Connects | |
|---|---|---|---|---|
| | | | XC2VP40 | XC2VP50 |
| 1 | VCCO_1 | H15 | | |
| 1 | VCCO_1 | D15 | | |
| 1 | VCCO_1 | M14 | | |
| 1 | VCCO_1 | M13 | | |
| 1 | VCCO_1 | L12 | | |
| 1 | VCCO_1 | H11 | | |
| 1 | VCCO_1 | D11 | | |
| 0 | VCCO_0 | H24 | | |
| 0 | VCCO_0 | D24 | | |
| 0 | VCCO_0 | L23 | | |
| 0 | VCCO_0 | M22 | | |
| 0 | VCCO_0 | M21 | | |
| 0 | VCCO_0 | M20 | | |
| 0 | VCCO_0 | H20 | | |
| 0 | VCCO_0 | D20 | | |
| 0 | VCCO_0 | M19 | | |
| 0 | VCCO_0 | M18 | | |
| | | | | |
| N/A | CCLK | AG9 | | |
| N/A | PROG_B | G26 | | |
| N/A | DONE | AF10 | | |
| N/A | M0 | AG25 | | |
| N/A | M1 | AG26 | | |
| N/A | M2 | AF25 | | |
| N/A | TCK | G9 | | |
| N/A | TDI | F26 | | |
| N/A | TDO | F9 | | |
| N/A | TMS | H10 | | |
| N/A | PWRDWN_B | AG10 | | |
| N/A | HSWAP_EN | H25 | | |
| N/A | RSVD | H9 | | |
| N/A | VBATT | J10 | | |
| N/A | DXP | J25 | | |
| N/A | DXN | H26 | | |
| | | | | |
| N/A | VCCINT | AD24 | | |
| N/A | VCCINT | L24 | | |
| N/A | VCCINT | AC23 | | |

*Table 11:* **FF1148 — XC2VP40 and XC2VP50**

| Bank | Pin Description | Pin Number | No Connects | |
|---|---|---|---|---|
| | | | XC2VP40 | XC2VP50 |
| N/A | VCCINT | M23 | | |
| N/A | VCCINT | AB22 | | |
| N/A | VCCINT | AA22 | | |
| N/A | VCCINT | Y22 | | |
| N/A | VCCINT | W22 | | |
| N/A | VCCINT | V22 | | |
| N/A | VCCINT | U22 | | |
| N/A | VCCINT | T22 | | |
| N/A | VCCINT | R22 | | |
| N/A | VCCINT | P22 | | |
| N/A | VCCINT | N22 | | |
| N/A | VCCINT | AB21 | | |
| N/A | VCCINT | N21 | | |
| N/A | VCCINT | AB20 | | |
| N/A | VCCINT | N20 | | |
| N/A | VCCINT | AB19 | | |
| N/A | VCCINT | N19 | | |
| N/A | VCCINT | AB18 | | |
| N/A | VCCINT | N18 | | |
| N/A | VCCINT | AB17 | | |
| N/A | VCCINT | N17 | | |
| N/A | VCCINT | AB16 | | |
| N/A | VCCINT | N16 | | |
| N/A | VCCINT | AB15 | | |
| N/A | VCCINT | N15 | | |
| N/A | VCCINT | AB14 | | |
| N/A | VCCINT | N14 | | |
| N/A | VCCINT | AB13 | | |
| N/A | VCCINT | AA13 | | |
| N/A | VCCINT | Y13 | | |
| N/A | VCCINT | W13 | | |
| N/A | VCCINT | V13 | | |
| N/A | VCCINT | U13 | | |
| N/A | VCCINT | T13 | | |
| N/A | VCCINT | R13 | | |
| N/A | VCCINT | P13 | | |
| N/A | VCCINT | N13 | | |
| N/A | VCCINT | AC12 | | |

*Table 11:* **FF1148 — XC2VP40 and XC2VP50**

| Bank | Pin Description | Pin Number | No Connects | |
|---|---|---|---|---|
| | | | XC2VP40 | XC2VP50 |
| N/A | VCCINT | M12 | | |
| N/A | VCCINT | AD11 | | |
| N/A | VCCINT | L11 | | |
| N/A | VCCAUX | AN34 | | |
| N/A | VCCAUX | AG34 | | |
| N/A | VCCAUX | U34 | | |
| N/A | VCCAUX | H34 | | |
| N/A | VCCAUX | B34 | | |
| N/A | VCCAUX | AP33 | | |
| N/A | VCCAUX | A33 | | |
| N/A | VCCAUX | AP27 | | |
| N/A | VCCAUX | A27 | | |
| N/A | VCCAUX | AP17 | | |
| N/A | VCCAUX | A17 | | |
| N/A | VCCAUX | AP8 | | |
| N/A | VCCAUX | A8 | | |
| N/A | VCCAUX | AP2 | | |
| N/A | VCCAUX | A2 | | |
| N/A | VCCAUX | AN1 | | |
| N/A | VCCAUX | AG1 | | |
| N/A | VCCAUX | U1 | | |
| N/A | VCCAUX | H1 | | |
| N/A | VCCAUX | B1 | | |
| N/A | GND | AK34 | | |
| N/A | GND | AF34 | | |
| N/A | GND | AB34 | | |
| N/A | GND | W34 | | |
| N/A | GND | V34 | | |
| N/A | GND | T34 | | |
| N/A | GND | N34 | | |
| N/A | GND | J34 | | |
| N/A | GND | E34 | | |
| N/A | GND | AN33 | | |
| N/A | GND | B33 | | |
| N/A | GND | AM32 | | |
| N/A | GND | C32 | | |
| N/A | GND | AP30 | | |
| N/A | GND | AK30 | | |

*Table 11:* **FF1148 — XC2VP40 and XC2VP50**

| Bank | Pin Description | Pin Number | No Connects | |
|---|---|---|---|---|
| | | | XC2VP40 | XC2VP50 |
| N/A | GND | AF30 | | |
| N/A | GND | AB30 | | |
| N/A | GND | W30 | | |
| N/A | GND | T30 | | |
| N/A | GND | N30 | | |
| N/A | GND | J30 | | |
| N/A | GND | E30 | | |
| N/A | GND | A30 | | |
| N/A | GND | AP26 | | |
| N/A | GND | AK26 | | |
| N/A | GND | AB26 | | |
| N/A | GND | W26 | | |
| N/A | GND | T26 | | |
| N/A | GND | N26 | | |
| N/A | GND | E26 | | |
| N/A | GND | A26 | | |
| N/A | GND | AE25 | | |
| N/A | GND | K25 | | |
| N/A | GND | AP22 | | |
| N/A | GND | AK22 | | |
| N/A | GND | AF22 | | |
| N/A | GND | J22 | | |
| N/A | GND | E22 | | |
| N/A | GND | A22 | | |
| N/A | GND | Y21 | | |
| N/A | GND | W21 | | |
| N/A | GND | V21 | | |
| N/A | GND | U21 | | |
| N/A | GND | T21 | | |
| N/A | GND | R21 | | |
| N/A | GND | AA20 | | |
| N/A | GND | Y20 | | |
| N/A | GND | W20 | | |
| N/A | GND | V20 | | |
| N/A | GND | U20 | | |
| N/A | GND | T20 | | |
| N/A | GND | R20 | | |
| N/A | GND | P20 | | |

*Table 11:* **FF1148 — XC2VP40 and XC2VP50**

| Bank | Pin Description | Pin Number | No Connects | |
|---|---|---|---|---|
| | | | XC2VP40 | XC2VP50 |
| N/A | GND | AP19 | | |
| N/A | GND | AK19 | | |
| N/A | GND | AF19 | | |
| N/A | GND | AA19 | | |
| N/A | GND | Y19 | | |
| N/A | GND | W19 | | |
| N/A | GND | V19 | | |
| N/A | GND | U19 | | |
| N/A | GND | T19 | | |
| N/A | GND | R19 | | |
| N/A | GND | P19 | | |
| N/A | GND | J19 | | |
| N/A | GND | E19 | | |
| N/A | GND | A19 | | |
| N/A | GND | AP18 | | |
| N/A | GND | AA18 | | |
| N/A | GND | Y18 | | |
| N/A | GND | W18 | | |
| N/A | GND | V18 | | |
| N/A | GND | U18 | | |
| N/A | GND | T18 | | |
| N/A | GND | R18 | | |
| N/A | GND | P18 | | |
| N/A | GND | A18 | | |
| N/A | GND | AA17 | | |
| N/A | GND | Y17 | | |
| N/A | GND | W17 | | |
| N/A | GND | V17 | | |
| N/A | GND | U17 | | |
| N/A | GND | T17 | | |
| N/A | GND | R17 | | |
| N/A | GND | P17 | | |
| N/A | GND | AP16 | | |
| N/A | GND | AK16 | | |
| N/A | GND | AF16 | | |
| N/A | GND | AA16 | | |
| N/A | GND | Y16 | | |
| N/A | GND | W16 | | |

*Table 11:* **FF1148 — XC2VP40 and XC2VP50**

| Bank | Pin Description | Pin Number | No Connects | |
|---|---|---|---|---|
| | | | XC2VP40 | XC2VP50 |
| N/A | GND | V16 | | |
| N/A | GND | U16 | | |
| N/A | GND | T16 | | |
| N/A | GND | R16 | | |
| N/A | GND | P16 | | |
| N/A | GND | J16 | | |
| N/A | GND | E16 | | |
| N/A | GND | A16 | | |
| N/A | GND | AA15 | | |
| N/A | GND | Y15 | | |
| N/A | GND | W15 | | |
| N/A | GND | V15 | | |
| N/A | GND | U15 | | |
| N/A | GND | T15 | | |
| N/A | GND | R15 | | |
| N/A | GND | P15 | | |
| N/A | GND | Y14 | | |
| N/A | GND | W14 | | |
| N/A | GND | V14 | | |
| N/A | GND | U14 | | |
| N/A | GND | T14 | | |
| N/A | GND | R14 | | |
| N/A | GND | AP13 | | |
| N/A | GND | AK13 | | |
| N/A | GND | AF13 | | |
| N/A | GND | J13 | | |
| N/A | GND | E13 | | |
| N/A | GND | A13 | | |
| N/A | GND | AE10 | | |
| N/A | GND | K10 | | |
| N/A | GND | AP9 | | |
| N/A | GND | AK9 | | |
| N/A | GND | AB9 | | |
| N/A | GND | W9 | | |
| N/A | GND | T9 | | |
| N/A | GND | N9 | | |
| N/A | GND | E9 | | |
| N/A | GND | A9 | | |

*Table 11:* **FF1148 — XC2VP40 and XC2VP50**

| Bank | Pin Description | Pin Number | No Connects | |
|---|---|---|---|---|
| | | | XC2VP40 | XC2VP50 |
| N/A | GND | AP5 | | |
| N/A | GND | AK5 | | |
| N/A | GND | AF5 | | |
| N/A | GND | AB5 | | |
| N/A | GND | W5 | | |
| N/A | GND | T5 | | |
| N/A | GND | N5 | | |
| N/A | GND | J5 | | |
| N/A | GND | E5 | | |
| N/A | GND | A5 | | |
| N/A | GND | AM3 | | |
| N/A | GND | C3 | | |
| N/A | GND | AN2 | | |
| N/A | GND | B2 | | |
| N/A | GND | AK1 | | |
| N/A | GND | AF1 | | |
| N/A | GND | AB1 | | |
| N/A | GND | W1 | | |
| N/A | GND | V1 | | |
| N/A | GND | T1 | | |
| N/A | GND | N1 | | |
| N/A | GND | J1 | | |
| N/A | GND | E1 | | |

**Notes:**
1. See Table 4 for an explanation of the signals available on this pin.

## FF1148 Flip-Chip Fine-Pitch BGA Package Specifications (1.00mm pitch)

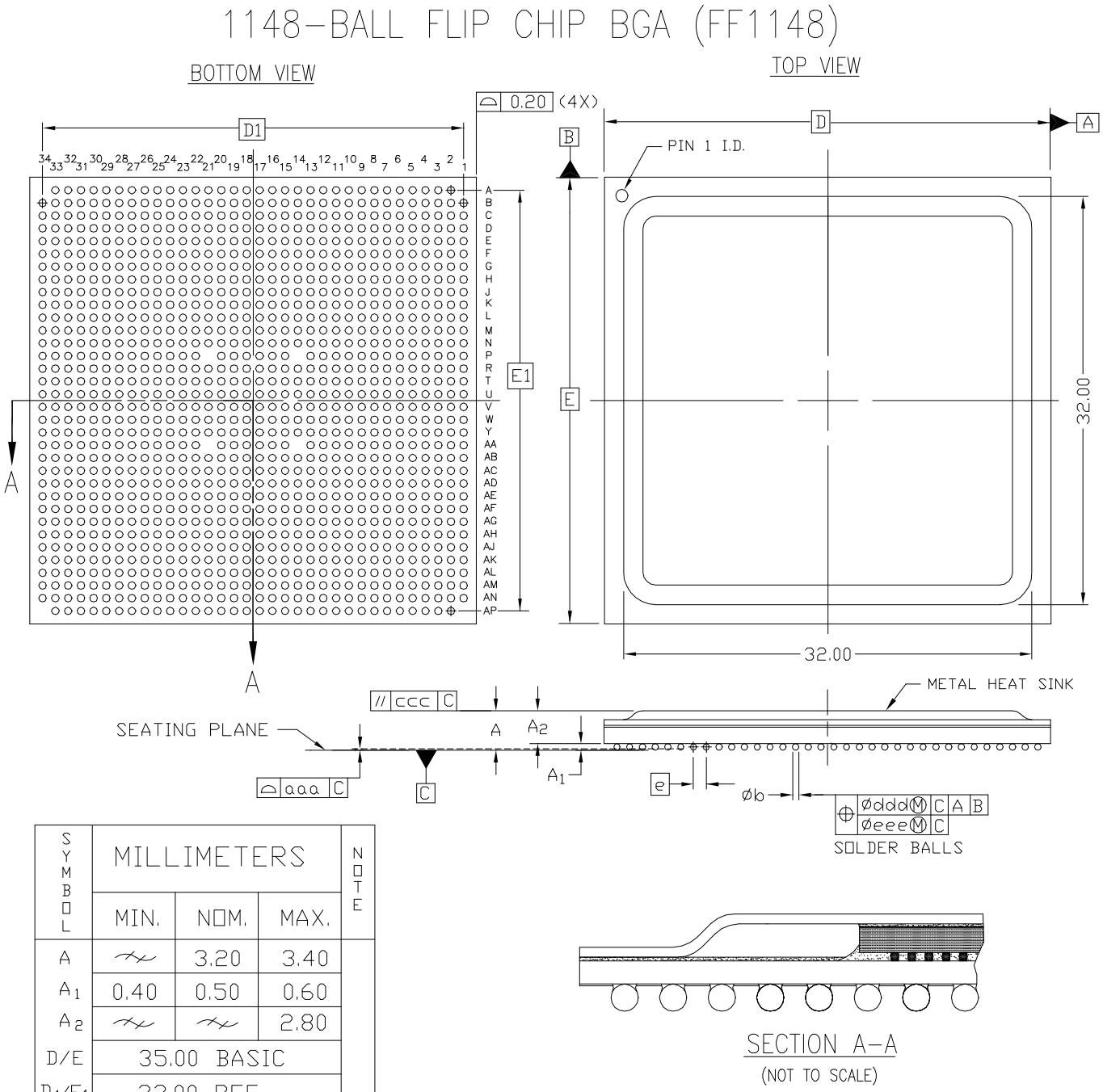


| SYMBOL | MILLIMETERS | | | NOTE |
|---|---|---|---|---|
| | MIN. | NOM. | MAX. | |
| A | — | 3.20 | 3.40 | |
| $A_1$ | 0.40 | 0.50 | 0.60 | |
| $A_2$ | — | — | 2.80 | |
| D/E | 35.00 BASIC | | | |
| $D_1/E_1$ | 33.00 REF | | | |
| e | 1.00 BASIC | | | |
| øb | 0.50 | 0.60 | 0.70 | |
| aaa | — | — | 0.20 | |
| ccc | — | — | 0.35 | |
| ddd | — | — | 0.30 | |
| eee | — | — | 0.10 | |
| M | 34 | | | 2 |

NOTES:

1. ALL DIMENSIONS AND TOLERANCES CONFORM TO ANSI Y14.5M-1994
2. SYMBOL 'M' IS THE BALL MATRIX SIZE.
3. CONFORMS TO JEDEC MS-034-AAR-1 (DEPOPULATED)

*Figure 7:* **FF1148 Flip-Chip Fine-Pitch BGA Package Specifications**

## FF1517 Flip-Chip Fine-Pitch BGA Package

As shown in Table 12, XC2VP50 and XC2VP70 Virtex-II Pro devices are available in the FF1517 flip-chip fine-pitch BGA package. Following this table are the FF1517 Flip-Chip Fine-Pitch BGA Package Specifications (1.00mm pitch).

*Table 12:* **FF1517 — XC2VP50 and XC2VP70**

| Bank | Pin Description | Pin Number | No Connects | |
|---|---|---|---|---|
| | | | XC2VP50 | XC2VP70 |
| 0 | IO_L01N_0/VRP_0 | D31 | | |
| 0 | IO_L01P_0/VRN_0 | E31 | | |
| 0 | IO_L02N_0 | K30 | | |
| 0 | IO_L02P_0 | J30 | | |
| 0 | IO_L03N_0 | G30 | | |
| 0 | IO_L03P_0/VREF_0 | H30 | | |
| 0 | IO_L05_0/No_Pair | K28 | | |
| 0 | IO_L06N_0 | E30 | | |
| 0 | IO_L06P_0 | F30 | | |
| 0 | IO_L07N_0 | C30 | | |
| 0 | IO_L07P_0 | D30 | | |
| 0 | IO_L08N_0 | J29 | | |
| 0 | IO_L08P_0 | K29 | | |
| 0 | IO_L09N_0 | G29 | | |
| 0 | IO_L09P_0/VREF_0 | H29 | | |
| 0 | IO_L19N_0 | E29 | | |
| 0 | IO_L19P_0 | F29 | | |
| 0 | IO_L20N_0 | L28 | | |
| 0 | IO_L20P_0 | L27 | | |
| 0 | IO_L21N_0 | C29 | | |
| 0 | IO_L21P_0 | D29 | | |
| 0 | IO_L25N_0 | H28 | | |
| 0 | IO_L25P_0 | J28 | | |
| 0 | IO_L26N_0 | M27 | | |
| 0 | IO_L26P_0 | M26 | | |
| 0 | IO_L27N_0 | D28 | | |
| 0 | IO_L27P_0/VREF_0 | E28 | | |
| 0 | IO_L28N_0 | H27 | NC | |
| 0 | IO_L28P_0 | J27 | NC | |
| 0 | IO_L29N_0 | J26 | NC | |
| 0 | IO_L29P_0 | K26 | NC | |
| 0 | IO_L30N_0 | F28 | NC | |
| 0 | IO_L30P_0 | G27 | NC | |
| 0 | IO_L34N_0 | D27 | NC | |

*Table 12:* **FF1517 — XC2VP50 and XC2VP70**

| Bank | Pin Description | Pin Number | No Connects | |
|---|---|---|---|---|
| | | | XC2VP50 | XC2VP70 |
| 0 | IO_L34P_0 | E27 | NC | |
| 0 | IO_L35N_0 | L26 | NC | |
| 0 | IO_L35P_0 | L25 | NC | |
| 0 | IO_L36N_0 | G26 | NC | |
| 0 | IO_L36P_0/VREF_0 | H26 | NC | |
| 0 | IO_L37N_0 | E26 | | |
| 0 | IO_L37P_0 | F26 | | |
| 0 | IO_L38N_0 | K25 | | |
| 0 | IO_L38P_0 | K24 | | |
| 0 | IO_L39N_0 | C26 | | |
| 0 | IO_L39P_0 | D26 | | |
| 0 | IO_L43N_0 | H25 | | |
| 0 | IO_L43P_0 | J25 | | |
| 0 | IO_L44N_0 | M25 | | |
| 0 | IO_L44P_0 | M24 | | |
| 0 | IO_L45N_0 | F25 | | |
| 0 | IO_L45P_0/VREF_0 | G25 | | |
| 0 | IO_L46N_0 | C25 | | |
| 0 | IO_L46P_0 | D25 | | |
| 0 | IO_L47N_0 | L23 | | |
| 0 | IO_L47P_0 | M22 | | |
| 0 | IO_L48N_0 | H24 | | |
| 0 | IO_L48P_0 | J24 | | |
| 0 | IO_L49N_0 | E25 | | |
| 0 | IO_L49P_0 | E24 | | |
| 0 | IO_L50_0/No_Pair | N23 | | |
| 0 | IO_L53_0/No_Pair | M23 | | |
| 0 | IO_L54N_0 | H23 | | |
| 0 | IO_L54P_0 | J23 | | |
| 0 | IO_L55N_0 | F24 | | |
| 0 | IO_L55P_0 | G23 | | |
| 0 | IO_L56N_0 | K22 | | |
| 0 | IO_L56P_0 | L22 | | |
| 0 | IO_L57N_0 | C23 | | |
| 0 | IO_L57P_0/VREF_0 | D23 | | |
| 0 | IO_L58N_0 | H22 | | |
| 0 | IO_L58P_0 | J22 | | |
| 0 | IO_L59N_0 | N22 | | |

*Table 12:* **FF1517 — XC2VP50 and XC2VP70**

| Bank | Pin Description | Pin Number | No Connects | |
|---|---|---|---|---|
| | | | XC2VP50 | XC2VP70 |
| 0 | IO_L59P_0 | N21 | | |
| 0 | IO_L60N_0 | E23 | | |
| 0 | IO_L60P_0 | F22 | | |
| 0 | IO_L64N_0 | D22 | | |
| 0 | IO_L64P_0 | E22 | | |
| 0 | IO_L65N_0 | H21 | | |
| 0 | IO_L65P_0 | H20 | | |
| 0 | IO_L66N_0 | G22 | | |
| 0 | IO_L66P_0/VREF_0 | G21 | | |
| 0 | IO_L67N_0 | D21 | | |
| 0 | IO_L67P_0 | E21 | | |
| 0 | IO_L68N_0 | J21 | | |
| 0 | IO_L68P_0 | K21 | | |
| 0 | IO_L69N_0 | C22 | | |
| 0 | IO_L69P_0/VREF_0 | C21 | | |
| 0 | IO_L73N_0 | F21 | | |
| 0 | IO_L73P_0 | F20 | | |
| 0 | IO_L74N_0/GCLK7P | L21 | | |
| 0 | IO_L74P_0/GCLK6S | M21 | | |
| 0 | IO_L75N_0/GCLK5P | D20 | | |
| 0 | IO_L75P_0/GCLK4S | E20 | | |
| | | | | |
| 1 | IO_L75N_1/GCLK3P | K20 | | |
| 1 | IO_L75P_1/GCLK2S | J20 | | |
| 1 | IO_L74N_1/GCLK1P | N20 | | |
| 1 | IO_L74P_1/GCLK0S | M20 | | |
| 1 | IO_L73N_1 | E19 | | |
| 1 | IO_L73P_1 | D19 | | |
| 1 | IO_L69N_1/VREF_1 | G19 | | |
| 1 | IO_L69P_1 | F19 | | |
| 1 | IO_L68N_1 | L19 | | |
| 1 | IO_L68P_1 | K19 | | |
| 1 | IO_L67N_1 | J19 | | |
| 1 | IO_L67P_1 | H19 | | |
| 1 | IO_L66N_1/VREF_1 | C19 | | |
| 1 | IO_L66P_1 | C18 | | |
| 1 | IO_L65N_1 | N19 | | |
| 1 | IO_L65P_1 | M19 | | |

*Table 12:* **FF1517 — XC2VP50 and XC2VP70**

| Bank | Pin Description | Pin Number | No Connects | |
|---|---|---|---|---|
| | | | XC2VP50 | XC2VP70 |
| 1 | IO_L64N_1 | E18 | | |
| 1 | IO_L64P_1 | D18 | | |
| 1 | IO_L60N_1 | G18 | | |
| 1 | IO_L60P_1 | F18 | | |
| 1 | IO_L59N_1 | L18 | | |
| 1 | IO_L59P_1 | K18 | | |
| 1 | IO_L58N_1 | J18 | | |
| 1 | IO_L58P_1 | H18 | | |
| 1 | IO_L57N_1/VREF_1 | D17 | | |
| 1 | IO_L57P_1 | C17 | | |
| 1 | IO_L56N_1 | N18 | | |
| 1 | IO_L56P_1 | M18 | | |
| 1 | IO_L55N_1 | E17 | | |
| 1 | IO_L55P_1 | E16 | | |
| 1 | IO_L54N_1 | G17 | | |
| 1 | IO_L54P_1 | F16 | | |
| 1 | IO_L53_1/No_Pair | J17 | | |
| 1 | IO_L50_1/No_Pair | H17 | | |
| 1 | IO_L49N_1 | J16 | | |
| 1 | IO_L49P_1 | H16 | | |
| 1 | IO_L48N_1 | D15 | | |
| 1 | IO_L48P_1 | C15 | | |
| 1 | IO_L47N_1 | L17 | | |
| 1 | IO_L47P_1 | K16 | | |
| 1 | IO_L46N_1 | F15 | | |
| 1 | IO_L46P_1 | E15 | | |
| 1 | IO_L45N_1/VREF_1 | H15 | | |
| 1 | IO_L45P_1 | G15 | | |
| 1 | IO_L44N_1 | N17 | | |
| 1 | IO_L44P_1 | M17 | | |
| 1 | IO_L43N_1 | D14 | | |
| 1 | IO_L43P_1 | C14 | | |
| 1 | IO_L39N_1 | F14 | | |
| 1 | IO_L39P_1 | E14 | | |
| 1 | IO_L38N_1 | M16 | | |
| 1 | IO_L38P_1 | M15 | | |
| 1 | IO_L37N_1 | H14 | | |
| 1 | IO_L37P_1 | G14 | | |

*Table 12:* **FF1517 — XC2VP50 and XC2VP70**

| Bank | Pin Description | Pin Number | No Connects | |
|---|---|---|---|---|
| | | | XC2VP50 | XC2VP70 |
| 1 | IO_L36N_1/VREF_1 | E13 | NC | |
| 1 | IO_L36P_1 | D13 | NC | |
| 1 | IO_L35N_1 | K15 | NC | |
| 1 | IO_L35P_1 | J15 | NC | |
| 1 | IO_L34N_1 | G13 | NC | |
| 1 | IO_L34P_1 | F12 | NC | |
| 1 | IO_L30N_1 | J13 | NC | |
| 1 | IO_L30P_1 | H13 | NC | |
| 1 | IO_L29N_1 | L15 | NC | |
| 1 | IO_L29P_1 | L14 | NC | |
| 1 | IO_L28N_1 | E12 | NC | |
| 1 | IO_L28P_1 | D12 | NC | |
| 1 | IO_L27N_1/VREF_1 | J12 | | |
| 1 | IO_L27P_1 | H12 | | |
| 1 | IO_L26N_1 | K14 | | |
| 1 | IO_L26P_1 | J14 | | |
| 1 | IO_L25N_1 | D11 | | |
| 1 | IO_L25P_1 | C11 | | |
| 1 | IO_L21N_1 | F11 | | |
| 1 | IO_L21P_1 | E11 | | |
| 1 | IO_L20N_1 | M14 | | |
| 1 | IO_L20P_1 | M13 | | |
| 1 | IO_L19N_1 | H11 | | |
| 1 | IO_L19P_1 | G11 | | |
| 1 | IO_L09N_1/VREF_1 | J11 | | |
| 1 | IO_L09P_1 | J10 | | |
| 1 | IO_L08N_1 | L13 | | |
| 1 | IO_L08P_1 | L12 | | |
| 1 | IO_L07N_1 | D10 | | |
| 1 | IO_L07P_1 | C10 | | |
| 1 | IO_L06N_1 | F10 | | |
| 1 | IO_L06P_1 | E10 | | |
| 1 | IO_L05_1/No_Pair | K10 | | |
| 1 | IO_L03N_1/VREF_1 | H10 | | |
| 1 | IO_L03P_1 | G10 | | |
| 1 | IO_L02N_1 | K12 | | |
| 1 | IO_L02P_1 | K11 | | |
| 1 | IO_L01N_1/VRP_1 | E9 | | |

*Table 12:* **FF1517 — XC2VP50 and XC2VP70**

| Bank | Pin Description | Pin Number | No Connects | |
|---|---|---|---|---|
| | | | XC2VP50 | XC2VP70 |
| 1 | IO_L01P_1/VRN_1 | D9 | | |
| | | | | |
| 2 | IO_L01N_2/VRP_2 | C7 | | |
| 2 | IO_L01P_2/VRN_2 | D7 | | |
| 2 | IO_L02N_2 | G9 | | |
| 2 | IO_L02P_2 | H9 | | |
| 2 | IO_L03N_2 | C5 | | |
| 2 | IO_L03P_2 | D5 | | |
| 2 | IO_L04N_2/VREF_2 | D6 | | |
| 2 | IO_L04P_2 | E6 | | |
| 2 | IO_L05N_2 | H8 | | |
| 2 | IO_L05P_2 | J9 | | |
| 2 | IO_L06N_2 | E7 | | |
| 2 | IO_L06P_2 | F7 | | |
| 2 | IO_L73N_2 | D1 | NC | |
| 2 | IO_L73P_2 | D2 | NC | |
| 2 | IO_L75N_2 | E2 | NC | |
| 2 | IO_L75P_2 | E3 | NC | |
| 2 | IO_L76N_2/VREF_2 | F5 | NC | |
| 2 | IO_L76P_2 | G5 | NC | |
| 2 | IO_L78N_2 | F3 | NC | |
| 2 | IO_L78P_2 | F4 | NC | |
| 2 | IO_L79N_2 | F1 | NC | |
| 2 | IO_L79P_2 | F2 | NC | |
| 2 | IO_L81N_2 | G6 | NC | |
| 2 | IO_L81P_2 | G7 | NC | |
| 2 | IO_L82N_2/VREF_2 | G3 | NC | |
| 2 | IO_L82P_2 | G4 | NC | |
| 2 | IO_L84N_2 | G1 | NC | |
| 2 | IO_L84P_2 | G2 | NC | |
| 2 | IO_L07N_2 | H6 | | |
| 2 | IO_L07P_2 | H7 | | |
| 2 | IO_L08N_2 | K8 | | |
| 2 | IO_L08P_2 | K9 | | |
| 2 | IO_L09N_2 | H2 | | |
| 2 | IO_L09P_2 | H3 | | |
| 2 | IO_L10N_2/VREF_2 | J6 | | |
| 2 | IO_L10P_2 | J7 | | |

*Table 12:* **FF1517 — XC2VP50 and XC2VP70**

| Bank | Pin Description | Pin Number | No Connects | |
|---|---|---|---|---|
| | | | XC2VP50 | XC2VP70 |
| 2 | IO_L11N_2 | L9 | | |
| 2 | IO_L11P_2 | M10 | | |
| 2 | IO_L12N_2 | H4 | | |
| 2 | IO_L12P_2 | J5 | | |
| 2 | IO_L13N_2 | J1 | | |
| 2 | IO_L13P_2 | J2 | | |
| 2 | IO_L14N_2 | M8 | | |
| 2 | IO_L14P_2 | N9 | | |
| 2 | IO_L15N_2 | K6 | | |
| 2 | IO_L15P_2 | K7 | | |
| 2 | IO_L16N_2/VREF_2 | K4 | | |
| 2 | IO_L16P_2 | K5 | | |
| 2 | IO_L17N_2 | P10 | | |
| 2 | IO_L17P_2 | N10 | | |
| 2 | IO_L18N_2 | K3 | | |
| 2 | IO_L18P_2 | J3 | | |
| 2 | IO_L19N_2 | K1 | | |
| 2 | IO_L19P_2 | K2 | | |
| 2 | IO_L20N_2 | M11 | | |
| 2 | IO_L20P_2 | N11 | | |
| 2 | IO_L21N_2 | L7 | | |
| 2 | IO_L21P_2 | L8 | | |
| 2 | IO_L22N_2/VREF_2 | L5 | | |
| 2 | IO_L22P_2 | L6 | | |
| 2 | IO_L23N_2 | P8 | | |
| 2 | IO_L23P_2 | P9 | | |
| 2 | IO_L24N_2 | L3 | | |
| 2 | IO_L24P_2 | L4 | | |
| 2 | IO_L25N_2 | L1 | | |
| 2 | IO_L25P_2 | L2 | | |
| 2 | IO_L26N_2 | P11 | | |
| 2 | IO_L26P_2 | P12 | | |
| 2 | IO_L27N_2 | M6 | | |
| 2 | IO_L27P_2 | M7 | | |
| 2 | IO_L28N_2/VREF_2 | M2 | | |
| 2 | IO_L28P_2 | M3 | | |
| 2 | IO_L29N_2 | R9 | | |
| 2 | IO_L29P_2 | R10 | | |

*Table 12:* **FF1517 — XC2VP50 and XC2VP70**

| Bank | Pin Description | Pin Number | No Connects | |
|---|---|---|---|---|
| | | | XC2VP50 | XC2VP70 |
| 2 | IO_L30N_2 | N6 | | |
| 2 | IO_L30P_2 | N7 | | |
| 2 | IO_L31N_2 | M4 | | |
| 2 | IO_L31P_2 | N5 | | |
| 2 | IO_L32N_2 | R11 | | |
| 2 | IO_L32P_2 | R12 | | |
| 2 | IO_L33N_2 | N1 | | |
| 2 | IO_L33P_2 | N2 | | |
| 2 | IO_L34N_2/VREF_2 | P6 | | |
| 2 | IO_L34P_2 | P7 | | |
| 2 | IO_L35N_2 | R13 | | |
| 2 | IO_L35P_2 | T13 | | |
| 2 | IO_L36N_2 | P4 | | |
| 2 | IO_L36P_2 | P5 | | |
| 2 | IO_L37N_2 | P3 | | |
| 2 | IO_L37P_2 | N3 | | |
| 2 | IO_L38N_2 | T10 | | |
| 2 | IO_L38P_2 | T11 | | |
| 2 | IO_L39N_2 | P1 | | |
| 2 | IO_L39P_2 | P2 | | |
| 2 | IO_L40N_2/VREF_2 | R7 | | |
| 2 | IO_L40P_2 | R8 | | |
| 2 | IO_L41N_2 | T12 | | |
| 2 | IO_L41P_2 | U12 | | |
| 2 | IO_L42N_2 | R5 | | |
| 2 | IO_L42P_2 | R6 | | |
| 2 | IO_L43N_2 | R3 | | |
| 2 | IO_L43P_2 | R4 | | |
| 2 | IO_L44N_2 | U8 | | |
| 2 | IO_L44P_2 | T8 | | |
| 2 | IO_L45N_2 | R1 | | |
| 2 | IO_L45P_2 | R2 | | |
| 2 | IO_L46N_2/VREF_2 | T6 | | |
| 2 | IO_L46P_2 | T7 | | |
| 2 | IO_L47N_2 | U9 | | |
| 2 | IO_L47P_2 | U10 | | |
| 2 | IO_L48N_2 | T2 | | |
| 2 | IO_L48P_2 | T3 | | |

*Table 12:* **FF1517 — XC2VP50 and XC2VP70**

| Bank | Pin Description | Pin Number | No Connects | |
|---|---|---|---|---|
| | | | XC2VP50 | XC2VP70 |
| 2 | IO_L49N_2 | U5 | | |
| 2 | IO_L49P_2 | U6 | | |
| 2 | IO_L50N_2 | U13 | | |
| 2 | IO_L50P_2 | V13 | | |
| 2 | IO_L51N_2 | U4 | | |
| 2 | IO_L51P_2 | T4 | | |
| 2 | IO_L52N_2/VREF_2 | U1 | | |
| 2 | IO_L52P_2 | U2 | | |
| 2 | IO_L53N_2 | V9 | | |
| 2 | IO_L53P_2 | V10 | | |
| 2 | IO_L54N_2 | V7 | | |
| 2 | IO_L54P_2 | V8 | | |
| 2 | IO_L55N_2 | V5 | | |
| 2 | IO_L55P_2 | V6 | | |
| 2 | IO_L56N_2 | V11 | | |
| 2 | IO_L56P_2 | V12 | | |
| 2 | IO_L57N_2 | V3 | | |
| 2 | IO_L57P_2 | V4 | | |
| 2 | IO_L58N_2/VREF_2 | V1 | | |
| 2 | IO_L58P_2 | V2 | | |
| 2 | IO_L59N_2 | W10 | | |
| 2 | IO_L59P_2 | W11 | | |
| 2 | IO_L60N_2 | W7 | | |
| 2 | IO_L60P_2 | W8 | | |
| 2 | IO_L85N_2 | W5 | | |
| 2 | IO_L85P_2 | W6 | | |
| 2 | IO_L86N_2 | W12 | | |
| 2 | IO_L86P_2 | W13 | | |
| 2 | IO_L87N_2 | W3 | | |
| 2 | IO_L87P_2 | W4 | | |
| 2 | IO_L88N_2/VREF_2 | Y7 | | |
| 2 | IO_L88P_2 | Y8 | | |
| 2 | IO_L89N_2 | W9 | | |
| 2 | IO_L89P_2 | Y9 | | |
| 2 | IO_L90N_2 | Y3 | | |
| 2 | IO_L90P_2 | Y4 | | |
| | | | | |
| 3 | IO_L90N_3 | AA7 | | |

*Table 12:* **FF1517 — XC2VP50 and XC2VP70**

| Bank | Pin Description | Pin Number | No Connects | |
|---|---|---|---|---|
| | | | XC2VP50 | XC2VP70 |
| 3 | IO_L90P_3 | AA8 | | |
| 3 | IO_L89N_3 | Y11 | | |
| 3 | IO_L89P_3 | Y12 | | |
| 3 | IO_L88N_3 | AA5 | | |
| 3 | IO_L88P_3 | AA6 | | |
| 3 | IO_L87N_3/VREF_3 | AA3 | | |
| 3 | IO_L87P_3 | AA4 | | |
| 3 | IO_L86N_3 | Y13 | | |
| 3 | IO_L86P_3 | AA13 | | |
| 3 | IO_L85N_3 | AB7 | | |
| 3 | IO_L85P_3 | AB8 | | |
| 3 | IO_L60N_3 | AB5 | | |
| 3 | IO_L60P_3 | AB6 | | |
| 3 | IO_L59N_3 | AA9 | | |
| 3 | IO_L59P_3 | AA10 | | |
| 3 | IO_L58N_3 | AB3 | | |
| 3 | IO_L58P_3 | AB4 | | |
| 3 | IO_L57N_3/VREF_3 | AB1 | | |
| 3 | IO_L57P_3 | AB2 | | |
| 3 | IO_L56N_3 | AA11 | | |
| 3 | IO_L56P_3 | AA12 | | |
| 3 | IO_L55N_3 | AC5 | | |
| 3 | IO_L55P_3 | AC6 | | |
| 3 | IO_L54N_3 | AC1 | | |
| 3 | IO_L54P_3 | AC2 | | |
| 3 | IO_L53N_3 | AB9 | | |
| 3 | IO_L53P_3 | AB10 | | |
| 3 | IO_L52N_3 | AC8 | | |
| 3 | IO_L52P_3 | AD8 | | |
| 3 | IO_L51N_3/VREF_3 | AC4 | | |
| 3 | IO_L51P_3 | AD4 | | |
| 3 | IO_L50N_3 | AB11 | | |
| 3 | IO_L50P_3 | AB12 | | |
| 3 | IO_L49N_3 | AD6 | | |
| 3 | IO_L49P_3 | AD7 | | |
| 3 | IO_L48N_3 | AD2 | | |
| 3 | IO_L48P_3 | AD3 | | |
| 3 | IO_L47N_3 | AC9 | | |

*Table 12:* **FF1517 — XC2VP50 and XC2VP70**

| Bank | Pin Description | Pin Number | No Connects | |
|---|---|---|---|---|
| | | | XC2VP50 | XC2VP70 |
| 3 | IO_L47P_3 | AC10 | | |
| 3 | IO_L46N_3 | AE7 | | |
| 3 | IO_L46P_3 | AE8 | | |
| 3 | IO_L45N_3/VREF_3 | AE5 | | |
| 3 | IO_L45P_3 | AE6 | | |
| 3 | IO_L44N_3 | AB13 | | |
| 3 | IO_L44P_3 | AC13 | | |
| 3 | IO_L43N_3 | AE3 | | |
| 3 | IO_L43P_3 | AE4 | | |
| 3 | IO_L42N_3 | AE1 | | |
| 3 | IO_L42P_3 | AE2 | | |
| 3 | IO_L41N_3 | AD10 | | |
| 3 | IO_L41P_3 | AD11 | | |
| 3 | IO_L40N_3 | AF6 | | |
| 3 | IO_L40P_3 | AF7 | | |
| 3 | IO_L39N_3/VREF_3 | AF4 | | |
| 3 | IO_L39P_3 | AF5 | | |
| 3 | IO_L38N_3 | AC12 | | |
| 3 | IO_L38P_3 | AD12 | | |
| 3 | IO_L37N_3 | AF1 | | |
| 3 | IO_L37P_3 | AF2 | | |
| 3 | IO_L36N_3 | AG6 | | |
| 3 | IO_L36P_3 | AG7 | | |
| 3 | IO_L35N_3 | AE9 | | |
| 3 | IO_L35P_3 | AE10 | | |
| 3 | IO_L34N_3 | AF3 | | |
| 3 | IO_L34P_3 | AG3 | | |
| 3 | IO_L33N_3/VREF_3 | AG1 | | |
| 3 | IO_L33P_3 | AG2 | | |
| 3 | IO_L32N_3 | AE11 | | |
| 3 | IO_L32P_3 | AE12 | | |
| 3 | IO_L31N_3 | AH6 | | |
| 3 | IO_L31P_3 | AH7 | | |
| 3 | IO_L30N_3 | AG5 | | |
| 3 | IO_L30P_3 | AH4 | | |
| 3 | IO_L29N_3 | AD13 | | |
| 3 | IO_L29P_3 | AE13 | | |
| 3 | IO_L28N_3 | AH2 | | |

*Table 12:* **FF1517 — XC2VP50 and XC2VP70**

| Bank | Pin Description | Pin Number | No Connects | |
|---|---|---|---|---|
| | | | XC2VP50 | XC2VP70 |
| 3 | IO_L28P_3 | AH3 | | |
| 3 | IO_L27N_3/VREF_3 | AJ7 | | |
| 3 | IO_L27P_3 | AJ8 | | |
| 3 | IO_L26N_3 | AF8 | | |
| 3 | IO_L26P_3 | AF9 | | |
| 3 | IO_L25N_3 | AJ5 | | |
| 3 | IO_L25P_3 | AJ6 | | |
| 3 | IO_L24N_3 | AJ3 | | |
| 3 | IO_L24P_3 | AJ4 | | |
| 3 | IO_L23N_3 | AF10 | | |
| 3 | IO_L23P_3 | AG10 | | |
| 3 | IO_L22N_3 | AJ1 | | |
| 3 | IO_L22P_3 | AJ2 | | |
| 3 | IO_L21N_3/VREF_3 | AK6 | | |
| 3 | IO_L21P_3 | AK7 | | |
| 3 | IO_L20N_3 | AF11 | | |
| 3 | IO_L20P_3 | AF12 | | |
| 3 | IO_L19N_3 | AK4 | | |
| 3 | IO_L19P_3 | AK5 | | |
| 3 | IO_L18N_3 | AK1 | | |
| 3 | IO_L18P_3 | AK2 | | |
| 3 | IO_L17N_3 | AG9 | | |
| 3 | IO_L17P_3 | AH8 | | |
| 3 | IO_L16N_3 | AL6 | | |
| 3 | IO_L16P_3 | AL7 | | |
| 3 | IO_L15N_3/VREF_3 | AK3 | | |
| 3 | IO_L15P_3 | AL3 | | |
| 3 | IO_L14N_3 | AG11 | | |
| 3 | IO_L14P_3 | AH11 | | |
| 3 | IO_L13N_3 | AL1 | | |
| 3 | IO_L13P_3 | AL2 | | |
| 3 | IO_L12N_3 | AM6 | | |
| 3 | IO_L12P_3 | AM7 | | |
| 3 | IO_L11N_3 | AH10 | | |
| 3 | IO_L11P_3 | AJ9 | | |
| 3 | IO_L10N_3 | AL5 | | |
| 3 | IO_L10P_3 | AM4 | | |
| 3 | IO_L09N_3/VREF_3 | AM2 | | |

*Table 12:* **FF1517 — XC2VP50 and XC2VP70**

| Bank | Pin Description | Pin Number | No Connects | |
|---|---|---|---|---|
| | | | XC2VP50 | XC2VP70 |
| 3 | IO_L09P_3 | AM3 | | |
| 3 | IO_L08N_3 | AK8 | | |
| 3 | IO_L08P_3 | AK9 | | |
| 3 | IO_L07N_3 | AN6 | | |
| 3 | IO_L07P_3 | AN7 | | |
| 3 | IO_L84N_3 | AN3 | NC | |
| 3 | IO_L84P_3 | AN4 | NC | |
| 3 | IO_L82N_3 | AN1 | NC | |
| 3 | IO_L82P_3 | AN2 | NC | |
| 3 | IO_L81N_3/VREF_3 | AN5 | NC | |
| 3 | IO_L81P_3 | AP5 | NC | |
| 3 | IO_L79N_3 | AP3 | NC | |
| 3 | IO_L79P_3 | AP4 | NC | |
| 3 | IO_L78N_3 | AP1 | NC | |
| 3 | IO_L78P_3 | AP2 | NC | |
| 3 | IO_L76N_3 | AR2 | NC | |
| 3 | IO_L76P_3 | AR3 | NC | |
| 3 | IO_L75N_3/VREF_3 | AT1 | NC | |
| 3 | IO_L75P_3 | AT2 | NC | |
| 3 | IO_L73N_3 | AT5 | NC | |
| 3 | IO_L73P_3 | AU5 | NC | |
| 3 | IO_L06N_3 | AR6 | | |
| 3 | IO_L06P_3 | AT6 | | |
| 3 | IO_L05N_3 | AL9 | | |
| 3 | IO_L05P_3 | AM8 | | |
| 3 | IO_L04N_3 | AP7 | | |
| 3 | IO_L04P_3 | AR7 | | |
| 3 | IO_L03N_3/VREF_3 | AM9 | | |
| 3 | IO_L03P_3 | AN9 | | |
| 3 | IO_L02N_3 | AR8 | | |
| 3 | IO_L02P_3 | AT8 | | |
| 3 | IO_L01N_3/VRP_3 | AT7 | | |
| 3 | IO_L01P_3/VRN_3 | AU7 | | |
| | | | | |
| 4 | IO_L01N_4/BUSY/DOUT(1) | AT9 | | |
| 4 | IO_L01P_4/INIT_B | AR9 | | |
| 4 | IO_L02N_4/D0/DIN(1) | AK11 | | |
| 4 | IO_L02P_4/D1 | AK12 | | |

*Table 12:* **FF1517 — XC2VP50 and XC2VP70**

| Bank | Pin Description | Pin Number | No Connects | |
|---|---|---|---|---|
| | | | XC2VP50 | XC2VP70 |
| 4 | IO_L03N_4/D2 | AN10 | | |
| 4 | IO_L03P_4/D3 | AM10 | | |
| 4 | IO_L05_4/No_Pair | AK10 | | |
| 4 | IO_L06N_4/VRP_4 | AR10 | | |
| 4 | IO_L06P_4/VRN_4 | AP10 | | |
| 4 | IO_L07N_4 | AU10 | | |
| 4 | IO_L07P_4/VREF_4 | AT10 | | |
| 4 | IO_L08N_4 | AJ12 | | |
| 4 | IO_L08P_4 | AJ13 | | |
| 4 | IO_L09N_4 | AL10 | | |
| 4 | IO_L09P_4/VREF_4 | AL11 | | |
| 4 | IO_L19N_4 | AN11 | | |
| 4 | IO_L19P_4 | AM11 | | |
| 4 | IO_L20N_4 | AH13 | | |
| 4 | IO_L20P_4 | AH14 | | |
| 4 | IO_L21N_4 | AR11 | | |
| 4 | IO_L21P_4 | AP11 | | |
| 4 | IO_L25N_4 | AU11 | | |
| 4 | IO_L25P_4 | AT11 | | |
| 4 | IO_L26N_4 | AL14 | | |
| 4 | IO_L26P_4 | AK14 | | |
| 4 | IO_L27N_4 | AM12 | | |
| 4 | IO_L27P_4/VREF_4 | AL12 | | |
| 4 | IO_L28N_4 | AT12 | NC | |
| 4 | IO_L28P_4 | AR12 | NC | |
| 4 | IO_L29N_4 | AJ14 | NC | |
| 4 | IO_L29P_4 | AJ15 | NC | |
| 4 | IO_L30N_4 | AM13 | NC | |
| 4 | IO_L30P_4 | AL13 | NC | |
| 4 | IO_L34N_4 | AP12 | NC | |
| 4 | IO_L34P_4 | AN13 | NC | |
| 4 | IO_L35N_4 | AL15 | NC | |
| 4 | IO_L35P_4 | AK15 | NC | |
| 4 | IO_L36N_4 | AT13 | NC | |
| 4 | IO_L36P_4/VREF_4 | AR13 | NC | |
| 4 | IO_L37N_4 | AN14 | | |
| 4 | IO_L37P_4 | AM14 | | |
| 4 | IO_L38N_4 | AH15 | | |

*Table 12:* **FF1517 — XC2VP50 and XC2VP70**

| Bank | Pin Description | Pin Number | No Connects | |
|---|---|---|---|---|
| | | | XC2VP50 | XC2VP70 |
| 4 | IO_L38P_4 | AH16 | | |
| 4 | IO_L39N_4 | AR14 | | |
| 4 | IO_L39P_4 | AP14 | | |
| 4 | IO_L43N_4 | AU14 | | |
| 4 | IO_L43P_4 | AT14 | | |
| 4 | IO_L44N_4 | AH17 | | |
| 4 | IO_L44P_4 | AG17 | | |
| 4 | IO_L45N_4 | AN15 | | |
| 4 | IO_L45P_4/VREF_4 | AM15 | | |
| 4 | IO_L46N_4 | AR15 | | |
| 4 | IO_L46P_4 | AP15 | | |
| 4 | IO_L47N_4 | AK16 | | |
| 4 | IO_L47P_4 | AJ17 | | |
| 4 | IO_L48N_4 | AU15 | | |
| 4 | IO_L48P_4 | AT15 | | |
| 4 | IO_L49N_4 | AM16 | | |
| 4 | IO_L49P_4 | AL16 | | |
| 4 | IO_L50_4/No_Pair | AM17 | | |
| 4 | IO_L53_4/No_Pair | AL17 | | |
| 4 | IO_L54N_4 | AP16 | | |
| 4 | IO_L54P_4 | AN17 | | |
| 4 | IO_L55N_4 | AR16 | | |
| 4 | IO_L55P_4 | AR17 | | |
| 4 | IO_L56N_4 | AH18 | | |
| 4 | IO_L56P_4 | AG18 | | |
| 4 | IO_L57N_4 | AU17 | | |
| 4 | IO_L57P_4/VREF_4 | AT17 | | |
| 4 | IO_L58N_4 | AM18 | | |
| 4 | IO_L58P_4 | AL18 | | |
| 4 | IO_L59N_4 | AK18 | | |
| 4 | IO_L59P_4 | AJ18 | | |
| 4 | IO_L60N_4 | AP18 | | |
| 4 | IO_L60P_4 | AN18 | | |
| 4 | IO_L64N_4 | AT18 | | |
| 4 | IO_L64P_4 | AR18 | | |
| 4 | IO_L65N_4 | AH19 | | |
| 4 | IO_L65P_4 | AG19 | | |
| 4 | IO_L66N_4 | AU18 | | |

*Table 12:* **FF1517 — XC2VP50 and XC2VP70**

| Bank | Pin Description | Pin Number | No Connects | |
|---|---|---|---|---|
| | | | XC2VP50 | XC2VP70 |
| 4 | IO_L66P_4/VREF_4 | AU19 | | |
| 4 | IO_L67N_4 | AM19 | | |
| 4 | IO_L67P_4 | AL19 | | |
| 4 | IO_L68N_4 | AK19 | | |
| 4 | IO_L68P_4 | AJ19 | | |
| 4 | IO_L69N_4 | AP19 | | |
| 4 | IO_L69P_4/VREF_4 | AN19 | | |
| 4 | IO_L73N_4 | AT19 | | |
| 4 | IO_L73P_4 | AR19 | | |
| 4 | IO_L74N_4/GCLK3S | AH20 | | |
| 4 | IO_L74P_4/GCLK2P | AG20 | | |
| 4 | IO_L75N_4/GCLK1S | AL20 | | |
| 4 | IO_L75P_4/GCLK0P | AK20 | | |
| | | | | |
| 5 | IO_L75N_5/GCLK7S | AR20 | | |
| 5 | IO_L75P_5/GCLK6P | AT20 | | |
| 5 | IO_L74N_5/GCLK5S | AH21 | | |
| 5 | IO_L74P_5/GCLK4P | AJ21 | | |
| 5 | IO_L73N_5 | AP20 | | |
| 5 | IO_L73P_5 | AP21 | | |
| 5 | IO_L69N_5/VREF_5 | AU21 | | |
| 5 | IO_L69P_5 | AU22 | | |
| 5 | IO_L68N_5 | AK21 | | |
| 5 | IO_L68P_5 | AL21 | | |
| 5 | IO_L67N_5 | AR21 | | |
| 5 | IO_L67P_5 | AT21 | | |
| 5 | IO_L66N_5/VREF_5 | AN21 | | |
| 5 | IO_L66P_5 | AN22 | | |
| 5 | IO_L65N_5 | AM20 | | |
| 5 | IO_L65P_5 | AM21 | | |
| 5 | IO_L64N_5 | AR22 | | |
| 5 | IO_L64P_5 | AT22 | | |
| 5 | IO_L60N_5 | AP22 | | |
| 5 | IO_L60P_5 | AR23 | | |
| 5 | IO_L59N_5 | AG21 | | |
| 5 | IO_L59P_5 | AG22 | | |
| 5 | IO_L58N_5 | AL22 | | |
| 5 | IO_L58P_5 | AM22 | | |

*Table 12:* **FF1517 — XC2VP50 and XC2VP70**

| Bank | Pin Description | Pin Number | No Connects | |
|---|---|---|---|---|
| | | | XC2VP50 | XC2VP70 |
| 5 | IO_L57N_5/VREF_5 | AT23 | | |
| 5 | IO_L57P_5 | AU23 | | |
| 5 | IO_L56N_5 | AJ22 | | |
| 5 | IO_L56P_5 | AK22 | | |
| 5 | IO_L55N_5 | AN23 | | |
| 5 | IO_L55P_5 | AP24 | | |
| 5 | IO_L54N_5 | AL23 | | |
| 5 | IO_L54P_5 | AM23 | | |
| 5 | IO_L53_5/No_Pair | AH23 | | |
| 5 | IO_L50_5/No_Pair | AG23 | | |
| 5 | IO_L49N_5 | AR24 | | |
| 5 | IO_L49P_5 | AR25 | | |
| 5 | IO_L48N_5 | AL24 | | |
| 5 | IO_L48P_5 | AM24 | | |
| 5 | IO_L47N_5 | AH22 | | |
| 5 | IO_L47P_5 | AJ23 | | |
| 5 | IO_L46N_5 | AT25 | | |
| 5 | IO_L46P_5 | AU25 | | |
| 5 | IO_L45N_5/VREF_5 | AN25 | | |
| 5 | IO_L45P_5 | AP25 | | |
| 5 | IO_L44N_5 | AH24 | | |
| 5 | IO_L44P_5 | AH25 | | |
| 5 | IO_L43N_5 | AL25 | | |
| 5 | IO_L43P_5 | AM25 | | |
| 5 | IO_L39N_5 | AT26 | | |
| 5 | IO_L39P_5 | AU26 | | |
| 5 | IO_L38N_5 | AK24 | | |
| 5 | IO_L38P_5 | AK25 | | |
| 5 | IO_L37N_5 | AP26 | | |
| 5 | IO_L37P_5 | AR26 | | |
| 5 | IO_L36N_5/VREF_5 | AM26 | NC | |
| 5 | IO_L36P_5 | AN26 | NC | |
| 5 | IO_L35N_5 | AJ25 | NC | |
| 5 | IO_L35P_5 | AJ26 | NC | |
| 5 | IO_L34N_5 | AR27 | NC | |
| 5 | IO_L34P_5 | AT27 | NC | |
| 5 | IO_L30N_5 | AN27 | NC | |
| 5 | IO_L30P_5 | AP28 | NC | |

*Table 12:* **FF1517 — XC2VP50 and XC2VP70**

| Bank | Pin Description | Pin Number | No Connects | |
|---|---|---|---|---|
| | | | XC2VP50 | XC2VP70 |
| 5 | IO_L29N_5 | AK26 | NC | |
| 5 | IO_L29P_5 | AL26 | NC | |
| 5 | IO_L28N_5 | AL27 | NC | |
| 5 | IO_L28P_5 | AM27 | NC | |
| 5 | IO_L27N_5/VREF_5 | AR28 | | |
| 5 | IO_L27P_5 | AT28 | | |
| 5 | IO_L26N_5 | AH26 | | |
| 5 | IO_L26P_5 | AH27 | | |
| 5 | IO_L25N_5 | AL28 | | |
| 5 | IO_L25P_5 | AM28 | | |
| 5 | IO_L21N_5 | AT29 | | |
| 5 | IO_L21P_5 | AU29 | | |
| 5 | IO_L20N_5 | AJ27 | | |
| 5 | IO_L20P_5 | AJ28 | | |
| 5 | IO_L19N_5 | AP29 | | |
| 5 | IO_L19P_5 | AR29 | | |
| 5 | IO_L09N_5/VREF_5 | AM29 | | |
| 5 | IO_L09P_5 | AN29 | | |
| 5 | IO_L08N_5 | AK29 | | |
| 5 | IO_L08P_5 | AL29 | | |
| 5 | IO_L07N_5/VREF_5 | AT30 | | |
| 5 | IO_L07P_5 | AU30 | | |
| 5 | IO_L06N_5/VRP_5 | AP30 | | |
| 5 | IO_L06P_5/VRN_5 | AR30 | | |
| 5 | IO_L05_5/No_Pair | AK28 | | |
| 5 | IO_L03N_5/D4 | AM30 | | |
| 5 | IO_L03P_5/D5 | AN30 | | |
| 5 | IO_L02N_5/D6 | AL30 | | |
| 5 | IO_L02P_5/D7 | AK30 | | |
| 5 | IO_L01N_5/RDWR_B | AR31 | | |
| 5 | IO_L01P_5/CS_B | AT31 | | |
| | | | | |
| 6 | IO_L01P_6/VRN_6 | AU33 | | |
| 6 | IO_L01N_6/VRP_6 | AT33 | | |
| 6 | IO_L02P_6 | AT32 | | |
| 6 | IO_L02N_6 | AR32 | | |
| 6 | IO_L03P_6 | AN31 | | |
| 6 | IO_L03N_6/VREF_6 | AM31 | | |

*Table 12:* **FF1517 — XC2VP50 and XC2VP70**

| Bank | Pin Description | Pin Number | No Connects | |
|---|---|---|---|---|
| | | | XC2VP50 | XC2VP70 |
| 6 | IO_L04P_6 | AR33 | | |
| 6 | IO_L04N_6 | AP33 | | |
| 6 | IO_L05P_6 | AM32 | | |
| 6 | IO_L05N_6 | AL31 | | |
| 6 | IO_L06P_6 | AT34 | | |
| 6 | IO_L06N_6 | AR34 | | |
| 6 | IO_L73P_6 | AU35 | NC | |
| 6 | IO_L73N_6 | AT35 | NC | |
| 6 | IO_L75P_6 | AT38 | NC | |
| 6 | IO_L75N_6/VREF_6 | AT39 | NC | |
| 6 | IO_L76P_6 | AR37 | NC | |
| 6 | IO_L76N_6 | AR38 | NC | |
| 6 | IO_L78P_6 | AP38 | NC | |
| 6 | IO_L78N_6 | AP39 | NC | |
| 6 | IO_L79P_6 | AP36 | NC | |
| 6 | IO_L79N_6 | AP37 | NC | |
| 6 | IO_L81P_6 | AP35 | NC | |
| 6 | IO_L81N_6/VREF_6 | AN35 | NC | |
| 6 | IO_L82P_6 | AN38 | NC | |
| 6 | IO_L82N_6 | AN39 | NC | |
| 6 | IO_L84P_6 | AN36 | NC | |
| 6 | IO_L84N_6 | AN37 | NC | |
| 6 | IO_L07P_6 | AN33 | | |
| 6 | IO_L07N_6 | AN34 | | |
| 6 | IO_L08P_6 | AK31 | | |
| 6 | IO_L08N_6 | AK32 | | |
| 6 | IO_L09P_6 | AM37 | | |
| 6 | IO_L09N_6/VREF_6 | AM38 | | |
| 6 | IO_L10P_6 | AM36 | | |
| 6 | IO_L10N_6 | AL35 | | |
| 6 | IO_L11P_6 | AJ31 | | |
| 6 | IO_L11N_6 | AH30 | | |
| 6 | IO_L12P_6 | AM33 | | |
| 6 | IO_L12N_6 | AM34 | | |
| 6 | IO_L13P_6 | AL38 | | |
| 6 | IO_L13N_6 | AL39 | | |
| 6 | IO_L14P_6 | AH29 | | |
| 6 | IO_L14N_6 | AG29 | | |

*Table 12:* **FF1517 — XC2VP50 and XC2VP70**

| Bank | Pin Description | Pin Number | No Connects | |
|---|---|---|---|---|
| | | | XC2VP50 | XC2VP70 |
| 6 | IO_L15P_6 | AL37 | | |
| 6 | IO_L15N_6/VREF_6 | AK37 | | |
| 6 | IO_L16P_6 | AL33 | | |
| 6 | IO_L16N_6 | AL34 | | |
| 6 | IO_L17P_6 | AH32 | | |
| 6 | IO_L17N_6 | AG31 | | |
| 6 | IO_L18P_6 | AK38 | | |
| 6 | IO_L18N_6 | AK39 | | |
| 6 | IO_L19P_6 | AK35 | | |
| 6 | IO_L19N_6 | AK36 | | |
| 6 | IO_L20P_6 | AF28 | | |
| 6 | IO_L20N_6 | AF29 | | |
| 6 | IO_L21P_6 | AK33 | | |
| 6 | IO_L21N_6/VREF_6 | AK34 | | |
| 6 | IO_L22P_6 | AJ38 | | |
| 6 | IO_L22N_6 | AJ39 | | |
| 6 | IO_L23P_6 | AG30 | | |
| 6 | IO_L23N_6 | AF30 | | |
| 6 | IO_L24P_6 | AJ36 | | |
| 6 | IO_L24N_6 | AJ37 | | |
| 6 | IO_L25P_6 | AJ34 | | |
| 6 | IO_L25N_6 | AJ35 | | |
| 6 | IO_L26P_6 | AF31 | | |
| 6 | IO_L26N_6 | AF32 | | |
| 6 | IO_L27P_6 | AJ32 | | |
| 6 | IO_L27N_6/VREF_6 | AJ33 | | |
| 6 | IO_L28P_6 | AH37 | | |
| 6 | IO_L28N_6 | AH38 | | |
| 6 | IO_L29P_6 | AE27 | | |
| 6 | IO_L29N_6 | AD27 | | |
| 6 | IO_L30P_6 | AH36 | | |
| 6 | IO_L30N_6 | AG35 | | |
| 6 | IO_L31P_6 | AH33 | | |
| 6 | IO_L31N_6 | AH34 | | |
| 6 | IO_L32P_6 | AE28 | | |
| 6 | IO_L32N_6 | AE29 | | |
| 6 | IO_L33P_6 | AG38 | | |
| 6 | IO_L33N_6/VREF_6 | AG39 | | |

*Table 12:* **FF1517 — XC2VP50 and XC2VP70**

| Bank | Pin Description | Pin Number | No Connects | |
|---|---|---|---|---|
| | | | XC2VP50 | XC2VP70 |
| 6 | IO_L34P_6 | AG37 | | |
| 6 | IO_L34N_6 | AF37 | | |
| 6 | IO_L35P_6 | AE30 | | |
| 6 | IO_L35N_6 | AE31 | | |
| 6 | IO_L36P_6 | AG33 | | |
| 6 | IO_L36N_6 | AG34 | | |
| 6 | IO_L37P_6 | AF38 | | |
| 6 | IO_L37N_6 | AF39 | | |
| 6 | IO_L38P_6 | AD28 | | |
| 6 | IO_L38N_6 | AC28 | | |
| 6 | IO_L39P_6 | AF35 | | |
| 6 | IO_L39N_6/VREF_6 | AF36 | | |
| 6 | IO_L40P_6 | AF33 | | |
| 6 | IO_L40N_6 | AF34 | | |
| 6 | IO_L41P_6 | AD29 | | |
| 6 | IO_L41N_6 | AD30 | | |
| 6 | IO_L42P_6 | AE38 | | |
| 6 | IO_L42N_6 | AE39 | | |
| 6 | IO_L43P_6 | AE36 | | |
| 6 | IO_L43N_6 | AE37 | | |
| 6 | IO_L44P_6 | AC27 | | |
| 6 | IO_L44N_6 | AB27 | | |
| 6 | IO_L45P_6 | AE34 | | |
| 6 | IO_L45N_6/VREF_6 | AE35 | | |
| 6 | IO_L46P_6 | AE32 | | |
| 6 | IO_L46N_6 | AE33 | | |
| 6 | IO_L47P_6 | AC30 | | |
| 6 | IO_L47N_6 | AC31 | | |
| 6 | IO_L48P_6 | AD37 | | |
| 6 | IO_L48N_6 | AD38 | | |
| 6 | IO_L49P_6 | AD33 | | |
| 6 | IO_L49N_6 | AD34 | | |
| 6 | IO_L50P_6 | AB28 | | |
| 6 | IO_L50N_6 | AB29 | | |
| 6 | IO_L51P_6 | AD36 | | |
| 6 | IO_L51N_6/VREF_6 | AC36 | | |
| 6 | IO_L52P_6 | AD32 | | |
| 6 | IO_L52N_6 | AC32 | | |

*Table 12:* **FF1517 — XC2VP50 and XC2VP70**

| Bank | Pin Description | Pin Number | No Connects | |
|---|---|---|---|---|
| | | | XC2VP50 | XC2VP70 |
| 6 | IO_L53P_6 | AB30 | | |
| 6 | IO_L53N_6 | AB31 | | |
| 6 | IO_L54P_6 | AC38 | | |
| 6 | IO_L54N_6 | AC39 | | |
| 6 | IO_L55P_6 | AC34 | | |
| 6 | IO_L55N_6 | AC35 | | |
| 6 | IO_L56P_6 | AA28 | | |
| 6 | IO_L56N_6 | AA29 | | |
| 6 | IO_L57P_6 | AB38 | | |
| 6 | IO_L57N_6/VREF_6 | AB39 | | |
| 6 | IO_L58P_6 | AB36 | | |
| 6 | IO_L58N_6 | AB37 | | |
| 6 | IO_L59P_6 | AA30 | | |
| 6 | IO_L59N_6 | AA31 | | |
| 6 | IO_L60P_6 | AB34 | | |
| 6 | IO_L60N_6 | AB35 | | |
| 6 | IO_L85P_6 | AB32 | | |
| 6 | IO_L85N_6 | AB33 | | |
| 6 | IO_L86P_6 | AA27 | | |
| 6 | IO_L86N_6 | Y27 | | |
| 6 | IO_L87P_6 | AA36 | | |
| 6 | IO_L87N_6/VREF_6 | AA37 | | |
| 6 | IO_L88P_6 | AA34 | | |
| 6 | IO_L88N_6 | AA35 | | |
| 6 | IO_L89P_6 | Y28 | | |
| 6 | IO_L89N_6 | Y29 | | |
| 6 | IO_L90P_6 | AA32 | | |
| 6 | IO_L90N_6 | AA33 | | |
| | | | | |
| 7 | IO_L90P_7 | Y36 | | |
| 7 | IO_L90N_7 | Y37 | | |
| 7 | IO_L89P_7 | Y31 | | |
| 7 | IO_L89N_7 | W31 | | |
| 7 | IO_L88P_7 | Y32 | | |
| 7 | IO_L88N_7/VREF_7 | Y33 | | |
| 7 | IO_L87P_7 | W36 | | |
| 7 | IO_L87N_7 | W37 | | |
| 7 | IO_L86P_7 | W27 | | |

*Table 12:* **FF1517 — XC2VP50 and XC2VP70**

| Bank | Pin Description | Pin Number | No Connects | |
|---|---|---|---|---|
| | | | XC2VP50 | XC2VP70 |
| 7 | IO_L86N_7 | W28 | | |
| 7 | IO_L85P_7 | W34 | | |
| 7 | IO_L85N_7 | W35 | | |
| 7 | IO_L60P_7 | W32 | | |
| 7 | IO_L60N_7 | W33 | | |
| 7 | IO_L59P_7 | W29 | | |
| 7 | IO_L59N_7 | W30 | | |
| 7 | IO_L58P_7 | V38 | | |
| 7 | IO_L58N_7/VREF_7 | V39 | | |
| 7 | IO_L57P_7 | V36 | | |
| 7 | IO_L57N_7 | V37 | | |
| 7 | IO_L56P_7 | V28 | | |
| 7 | IO_L56N_7 | V29 | | |
| 7 | IO_L55P_7 | V34 | | |
| 7 | IO_L55N_7 | V35 | | |
| 7 | IO_L54P_7 | V32 | | |
| 7 | IO_L54N_7 | V33 | | |
| 7 | IO_L53P_7 | V30 | | |
| 7 | IO_L53N_7 | V31 | | |
| 7 | IO_L52P_7 | U38 | | |
| 7 | IO_L52N_7/VREF_7 | U39 | | |
| 7 | IO_L51P_7 | T36 | | |
| 7 | IO_L51N_7 | U36 | | |
| 7 | IO_L50P_7 | V27 | | |
| 7 | IO_L50N_7 | U27 | | |
| 7 | IO_L49P_7 | U34 | | |
| 7 | IO_L49N_7 | U35 | | |
| 7 | IO_L48P_7 | T37 | | |
| 7 | IO_L48N_7 | T38 | | |
| 7 | IO_L47P_7 | U30 | | |
| 7 | IO_L47N_7 | U31 | | |
| 7 | IO_L46P_7 | T33 | | |
| 7 | IO_L46N_7/VREF_7 | T34 | | |
| 7 | IO_L45P_7 | R38 | | |
| 7 | IO_L45N_7 | R39 | | |
| 7 | IO_L44P_7 | T32 | | |
| 7 | IO_L44N_7 | U32 | | |
| 7 | IO_L43P_7 | R36 | | |

*Table 12:* **FF1517 — XC2VP50 and XC2VP70**

| Bank | Pin Description | Pin Number | No Connects | |
|---|---|---|---|---|
| | | | XC2VP50 | XC2VP70 |
| 7 | IO_L43N_7 | R37 | | |
| 7 | IO_L42P_7 | R34 | | |
| 7 | IO_L42N_7 | R35 | | |
| 7 | IO_L41P_7 | U28 | | |
| 7 | IO_L41N_7 | T28 | | |
| 7 | IO_L40P_7 | R32 | | |
| 7 | IO_L40N_7/VREF_7 | R33 | | |
| 7 | IO_L39P_7 | P38 | | |
| 7 | IO_L39N_7 | P39 | | |
| 7 | IO_L38P_7 | T29 | | |
| 7 | IO_L38N_7 | T30 | | |
| 7 | IO_L37P_7 | N37 | | |
| 7 | IO_L37N_7 | P37 | | |
| 7 | IO_L36P_7 | P35 | | |
| 7 | IO_L36N_7 | P36 | | |
| 7 | IO_L35P_7 | T27 | | |
| 7 | IO_L35N_7 | R27 | | |
| 7 | IO_L34P_7 | P33 | | |
| 7 | IO_L34N_7/VREF_7 | P34 | | |
| 7 | IO_L33P_7 | N38 | | |
| 7 | IO_L33N_7 | N39 | | |
| 7 | IO_L32P_7 | R28 | | |
| 7 | IO_L32N_7 | R29 | | |
| 7 | IO_L31P_7 | N35 | | |
| 7 | IO_L31N_7 | M36 | | |
| 7 | IO_L30P_7 | N33 | | |
| 7 | IO_L30N_7 | N34 | | |
| 7 | IO_L29P_7 | R30 | | |
| 7 | IO_L29N_7 | R31 | | |
| 7 | IO_L28P_7 | M37 | | |
| 7 | IO_L28N_7/VREF_7 | M38 | | |
| 7 | IO_L27P_7 | M33 | | |
| 7 | IO_L27N_7 | M34 | | |
| 7 | IO_L26P_7 | P28 | | |
| 7 | IO_L26N_7 | P29 | | |
| 7 | IO_L25P_7 | L38 | | |
| 7 | IO_L25N_7 | L39 | | |
| 7 | IO_L24P_7 | L36 | | |

*Table 12:* **FF1517 — XC2VP50 and XC2VP70**

| Bank | Pin Description | Pin Number | No Connects | |
|---|---|---|---|---|
| | | | XC2VP50 | XC2VP70 |
| 7 | IO_L24N_7 | L37 | | |
| 7 | IO_L23P_7 | P31 | | |
| 7 | IO_L23N_7 | P32 | | |
| 7 | IO_L22P_7 | L34 | | |
| 7 | IO_L22N_7/VREF_7 | L35 | | |
| 7 | IO_L21P_7 | L32 | | |
| 7 | IO_L21N_7 | L33 | | |
| 7 | IO_L20P_7 | N29 | | |
| 7 | IO_L20N_7 | M29 | | |
| 7 | IO_L19P_7 | K38 | | |
| 7 | IO_L19N_7 | K39 | | |
| 7 | IO_L18P_7 | J37 | | |
| 7 | IO_L18N_7 | K37 | | |
| 7 | IO_L17P_7 | N30 | | |
| 7 | IO_L17N_7 | P30 | | |
| 7 | IO_L16P_7 | K35 | | |
| 7 | IO_L16N_7/VREF_7 | K36 | | |
| 7 | IO_L15P_7 | K34 | | |
| 7 | IO_L15N_7 | K33 | | |
| 7 | IO_L14P_7 | N31 | | |
| 7 | IO_L14N_7 | M32 | | |
| 7 | IO_L13P_7 | J38 | | |
| 7 | IO_L13N_7 | J39 | | |
| 7 | IO_L12P_7 | J35 | | |
| 7 | IO_L12N_7 | H36 | | |
| 7 | IO_L11P_7 | M30 | | |
| 7 | IO_L11N_7 | L31 | | |
| 7 | IO_L10P_7 | J33 | | |
| 7 | IO_L10N_7/VREF_7 | J34 | | |
| 7 | IO_L09P_7 | H37 | | |
| 7 | IO_L09N_7 | H38 | | |
| 7 | IO_L08P_7 | K31 | | |
| 7 | IO_L08N_7 | K32 | | |
| 7 | IO_L07P_7 | H33 | | |
| 7 | IO_L07N_7 | H34 | | |
| 7 | IO_L84P_7 | G38 | NC | |
| 7 | IO_L84N_7 | G39 | NC | |
| 7 | IO_L82P_7 | G36 | NC | |

*Table 12:* **FF1517 — XC2VP50 and XC2VP70**

| Bank | Pin Description | Pin Number | No Connects | |
|---|---|---|---|---|
| | | | XC2VP50 | XC2VP70 |
| 7 | IO_L82N_7/VREF_7 | G37 | NC | |
| 7 | IO_L81P_7 | G33 | NC | |
| 7 | IO_L81N_7 | G34 | NC | |
| 7 | IO_L79P_7 | F38 | NC | |
| 7 | IO_L79N_7 | F39 | NC | |
| 7 | IO_L78P_7 | F36 | NC | |
| 7 | IO_L78N_7 | F37 | NC | |
| 7 | IO_L76P_7 | G35 | NC | |
| 7 | IO_L76N_7/VREF_7 | F35 | NC | |
| 7 | IO_L75P_7 | E37 | NC | |
| 7 | IO_L75N_7 | E38 | NC | |
| 7 | IO_L73P_7 | D38 | NC | |
| 7 | IO_L73N_7 | D39 | NC | |
| 7 | IO_L06P_7 | F33 | | |
| 7 | IO_L06N_7 | E33 | | |
| 7 | IO_L05P_7 | J31 | | |
| 7 | IO_L05N_7 | H32 | | |
| 7 | IO_L04P_7 | E34 | | |
| 7 | IO_L04N_7/VREF_7 | D34 | | |
| 7 | IO_L03P_7 | D35 | | |
| 7 | IO_L03N_7 | C35 | | |
| 7 | IO_L02P_7 | H31 | | |
| 7 | IO_L02N_7 | G31 | | |
| 7 | IO_L01P_7/VRN_7 | D33 | | |
| 7 | IO_L01N_7/VRP_7 | C33 | | |
| | | | | |
| 7 | VCCO_7 | E39 | | |
| 7 | VCCO_7 | U37 | | |
| 7 | VCCO_7 | N36 | | |
| 7 | VCCO_7 | J36 | | |
| 7 | VCCO_7 | E36 | | |
| 7 | VCCO_7 | Y35 | | |
| 7 | VCCO_7 | U33 | | |
| 7 | VCCO_7 | N32 | | |
| 7 | VCCO_7 | J32 | | |
| 7 | VCCO_7 | F32 | | |
| 7 | VCCO_7 | U29 | | |
| 7 | VCCO_7 | N28 | | |

*Table 12:* **FF1517 — XC2VP50 and XC2VP70**

| Bank | Pin Description | Pin Number | No Connects | |
|---|---|---|---|---|
| | | | XC2VP50 | XC2VP70 |
| 7 | VCCO_7 | P27 | | |
| 7 | VCCO_7 | W26 | | |
| 7 | VCCO_7 | V26 | | |
| 7 | VCCO_7 | U26 | | |
| 7 | VCCO_7 | T26 | | |
| 7 | VCCO_7 | R26 | | |
| 6 | VCCO_6 | AR39 | | |
| 6 | VCCO_6 | AC37 | | |
| 6 | VCCO_6 | AR36 | | |
| 6 | VCCO_6 | AL36 | | |
| 6 | VCCO_6 | AG36 | | |
| 6 | VCCO_6 | AC33 | | |
| 6 | VCCO_6 | AP32 | | |
| 6 | VCCO_6 | AL32 | | |
| 6 | VCCO_6 | AG32 | | |
| 6 | VCCO_6 | AC29 | | |
| 6 | VCCO_6 | AG28 | | |
| 6 | VCCO_6 | AF27 | | |
| 6 | VCCO_6 | AE26 | | |
| 6 | VCCO_6 | AD26 | | |
| 6 | VCCO_6 | AC26 | | |
| 6 | VCCO_6 | AB26 | | |
| 6 | VCCO_6 | AA26 | | |
| 6 | VCCO_6 | Y26 | | |
| 5 | VCCO_5 | AP27 | | |
| 5 | VCCO_5 | AK27 | | |
| 5 | VCCO_5 | AG26 | | |
| 5 | VCCO_5 | AG25 | | |
| 5 | VCCO_5 | AF25 | | |
| 5 | VCCO_5 | AG24 | | |
| 5 | VCCO_5 | AF24 | | |
| 5 | VCCO_5 | AP23 | | |
| 5 | VCCO_5 | AK23 | | |
| 5 | VCCO_5 | AF23 | | |
| 5 | VCCO_5 | AF22 | | |
| 5 | VCCO_5 | AF21 | | |
| 4 | VCCO_4 | AF19 | | |
| 4 | VCCO_4 | AF18 | | |

*Table 12:* **FF1517 — XC2VP50 and XC2VP70**

| Bank | Pin Description | Pin Number | No Connects | |
|---|---|---|---|---|
| | | | XC2VP50 | XC2VP70 |
| 4 | VCCO_4 | AP17 | | |
| 4 | VCCO_4 | AK17 | | |
| 4 | VCCO_4 | AF17 | | |
| 4 | VCCO_4 | AG16 | | |
| 4 | VCCO_4 | AF16 | | |
| 4 | VCCO_4 | AG15 | | |
| 4 | VCCO_4 | AF15 | | |
| 4 | VCCO_4 | AG14 | | |
| 4 | VCCO_4 | AP13 | | |
| 4 | VCCO_4 | AK13 | | |
| 3 | VCCO_3 | AE14 | | |
| 3 | VCCO_3 | AD14 | | |
| 3 | VCCO_3 | AC14 | | |
| 3 | VCCO_3 | AB14 | | |
| 3 | VCCO_3 | AA14 | | |
| 3 | VCCO_3 | Y14 | | |
| 3 | VCCO_3 | AF13 | | |
| 3 | VCCO_3 | AG12 | | |
| 3 | VCCO_3 | AC11 | | |
| 3 | VCCO_3 | AP8 | | |
| 3 | VCCO_3 | AL8 | | |
| 3 | VCCO_3 | AG8 | | |
| 3 | VCCO_3 | AC7 | | |
| 3 | VCCO_3 | AR4 | | |
| 3 | VCCO_3 | AL4 | | |
| 3 | VCCO_3 | AG4 | | |
| 3 | VCCO_3 | AC3 | | |
| 3 | VCCO_3 | AR1 | | |
| 2 | VCCO_2 | W14 | | |
| 2 | VCCO_2 | V14 | | |
| 2 | VCCO_2 | U14 | | |
| 2 | VCCO_2 | T14 | | |
| 2 | VCCO_2 | R14 | | |
| 2 | VCCO_2 | P13 | | |
| 2 | VCCO_2 | N12 | | |
| 2 | VCCO_2 | U11 | | |
| 2 | VCCO_2 | N8 | | |
| 2 | VCCO_2 | J8 | | |

*Table 12:* **FF1517 — XC2VP50 and XC2VP70**

| Bank | Pin Description | Pin Number | No Connects | |
|---|---|---|---|---|
| | | | XC2VP50 | XC2VP70 |
| 2 | VCCO_2 | F8 | | |
| 2 | VCCO_2 | U7 | | |
| 2 | VCCO_2 | Y5 | | |
| 2 | VCCO_2 | N4 | | |
| 2 | VCCO_2 | J4 | | |
| 2 | VCCO_2 | E4 | | |
| 2 | VCCO_2 | U3 | | |
| 2 | VCCO_2 | E1 | | |
| 1 | VCCO_1 | N14 | | |
| 1 | VCCO_1 | K13 | | |
| 1 | VCCO_1 | F13 | | |
| 1 | VCCO_1 | P19 | | |
| 1 | VCCO_1 | P18 | | |
| 1 | VCCO_1 | P17 | | |
| 1 | VCCO_1 | K17 | | |
| 1 | VCCO_1 | F17 | | |
| 1 | VCCO_1 | P16 | | |
| 1 | VCCO_1 | N16 | | |
| 1 | VCCO_1 | P15 | | |
| 1 | VCCO_1 | N15 | | |
| 0 | VCCO_0 | K27 | | |
| 0 | VCCO_0 | F27 | | |
| 0 | VCCO_0 | N26 | | |
| 0 | VCCO_0 | P25 | | |
| 0 | VCCO_0 | N25 | | |
| 0 | VCCO_0 | P24 | | |
| 0 | VCCO_0 | N24 | | |
| 0 | VCCO_0 | P23 | | |
| 0 | VCCO_0 | K23 | | |
| 0 | VCCO_0 | F23 | | |
| 0 | VCCO_0 | P22 | | |
| 0 | VCCO_0 | P21 | | |
| | | | | |
| N/A | CCLK | AJ10 | | |
| N/A | PROG_B | D32 | | |
| N/A | DONE | AJ11 | | |
| N/A | M0 | AP31 | | |
| N/A | M1 | AJ30 | | |

*Table 12:* **FF1517 — XC2VP50 and XC2VP70**

| Bank | Pin Description | Pin Number | No Connects | |
|---|---|---|---|---|
| | | | XC2VP50 | XC2VP70 |
| N/A | M2 | AJ29 | | |
| N/A | TCK | E8 | | |
| N/A | TDI | L30 | | |
| N/A | TDO | L10 | | |
| N/A | TMS | F9 | | |
| N/A | PWRDWN_B | AP9 | | |
| N/A | HSWAP_EN | E32 | | |
| N/A | RSVD | D8 | | |
| N/A | VBATT | L11 | | |
| N/A | DXP | L29 | | |
| N/A | DXN | F31 | | |
| N/A | AVCCAUXTX2 | B35 | | |
| N/A | VTTXPAD2 | B36 | | |
| N/A | TXNPAD2 | A36 | | |
| N/A | TXPPAD2 | A35 | | |
| N/A | GNDA2 | C34 | | |
| N/A | RXPPAD2 | A34 | | |
| N/A | RXNPAD2 | A33 | | |
| N/A | VTRXPAD2 | B34 | | |
| N/A | AVCCAUXRX2 | B33 | | |
| N/A | AVCCAUXTX4 | B31 | | |
| N/A | VTTXPAD4 | B32 | | |
| N/A | TXNPAD4 | A32 | | |
| N/A | TXPPAD4 | A31 | | |
| N/A | GNDA4 | C31 | | |
| N/A | RXPPAD4 | A30 | | |
| N/A | RXNPAD4 | A29 | | |
| N/A | VTRXPAD4 | B30 | | |
| N/A | AVCCAUXRX4 | B29 | | |
| N/A | AVCCAUXTX5 | B27 | | |
| N/A | VTTXPAD5 | B28 | | |
| N/A | TXNPAD5 | A28 | | |
| N/A | TXPPAD5 | A27 | | |
| N/A | GNDA5 | C27 | | |
| N/A | RXPPAD5 | A26 | | |
| N/A | RXNPAD5 | A25 | | |
| N/A | VTRXPAD5 | B26 | | |
| N/A | AVCCAUXRX5 | B25 | | |

*Table 12:* **FF1517 — XC2VP50 and XC2VP70**

| Bank | Pin Description | Pin Number | No Connects | |
|---|---|---|---|---|
| | | | XC2VP50 | XC2VP70 |
| N/A | AVCCAUXTX6 | B23 | | |
| N/A | VTTXPAD6 | B24 | | |
| N/A | TXNPAD6 | A24 | | |
| N/A | TXPPAD6 | A23 | | |
| N/A | GNDA6 | C24 | | |
| N/A | RXPPAD6 | A22 | | |
| N/A | RXNPAD6 | A21 | | |
| N/A | VTRXPAD6 | B22 | | |
| N/A | AVCCAUXRX6 | B21 | | |
| N/A | AVCCAUXTX7 | B18 | | |
| N/A | VTTXPAD7 | B19 | | |
| N/A | TXNPAD7 | A19 | | |
| N/A | TXPPAD7 | A18 | | |
| N/A | GNDA7 | C16 | | |
| N/A | RXPPAD7 | A17 | | |
| N/A | RXNPAD7 | A16 | | |
| N/A | VTRXPAD7 | B17 | | |
| N/A | AVCCAUXRX7 | B16 | | |
| N/A | AVCCAUXTX8 | B14 | | |
| N/A | VTTXPAD8 | B15 | | |
| N/A | TXNPAD8 | A15 | | |
| N/A | TXPPAD8 | A14 | | |
| N/A | GNDA8 | C13 | | |
| N/A | RXPPAD8 | A13 | | |
| N/A | RXNPAD8 | A12 | | |
| N/A | VTRXPAD8 | B13 | | |
| N/A | AVCCAUXRX8 | B12 | | |
| N/A | AVCCAUXTX9 | B10 | | |
| N/A | VTTXPAD9 | B11 | | |
| N/A | TXNPAD9 | A11 | | |
| N/A | TXPPAD9 | A10 | | |
| N/A | GNDA9 | C9 | | |
| N/A | RXPPAD9 | A9 | | |
| N/A | RXNPAD9 | A8 | | |
| N/A | VTRXPAD9 | B9 | | |
| N/A | AVCCAUXRX9 | B8 | | |
| N/A | AVCCAUXTX11 | B6 | | |
| N/A | VTTXPAD11 | B7 | | |

*Table 12:* **FF1517 — XC2VP50 and XC2VP70**

| Bank | Pin Description | Pin Number | No Connects | |
|---|---|---|---|---|
| | | | XC2VP50 | XC2VP70 |
| N/A | TXNPAD11 | A7 | | |
| N/A | TXPPAD11 | A6 | | |
| N/A | GNDA11 | C6 | | |
| N/A | RXPPAD11 | A5 | | |
| N/A | RXNPAD11 | A4 | | |
| N/A | VTRXPAD11 | B5 | | |
| N/A | AVCCAUXRX11 | B4 | | |
| N/A | AVCCAUXRX14 | AV4 | | |
| N/A | VTRXPAD14 | AV5 | | |
| N/A | RXNPAD14 | AW4 | | |
| N/A | RXPPAD14 | AW5 | | |
| N/A | GNDA14 | AU6 | | |
| N/A | TXPPAD14 | AW6 | | |
| N/A | TXNPAD14 | AW7 | | |
| N/A | VTTXPAD14 | AV7 | | |
| N/A | AVCCAUXTX14 | AV6 | | |
| N/A | AVCCAUXRX16 | AV8 | | |
| N/A | VTRXPAD16 | AV9 | | |
| N/A | RXNPAD16 | AW8 | | |
| N/A | RXPPAD16 | AW9 | | |
| N/A | GNDA16 | AU9 | | |
| N/A | TXPPAD16 | AW10 | | |
| N/A | TXNPAD16 | AW11 | | |
| N/A | VTTXPAD16 | AV11 | | |
| N/A | AVCCAUXTX16 | AV10 | | |
| N/A | AVCCAUXRX17 | AV12 | | |
| N/A | VTRXPAD17 | AV13 | | |
| N/A | RXNPAD17 | AW12 | | |
| N/A | RXPPAD17 | AW13 | | |
| N/A | GNDA17 | AU13 | | |
| N/A | TXPPAD17 | AW14 | | |
| N/A | TXNPAD17 | AW15 | | |
| N/A | VTTXPAD17 | AV15 | | |
| N/A | AVCCAUXTX17 | AV14 | | |
| N/A | AVCCAUXRX18 | AV16 | | |
| N/A | VTRXPAD18 | AV17 | | |
| N/A | RXNPAD18 | AW16 | | |
| N/A | RXPPAD18 | AW17 | | |

*Table 12:* **FF1517 — XC2VP50 and XC2VP70**

| Bank | Pin Description | Pin Number | No Connects | |
|---|---|---|---|---|
| | | | XC2VP50 | XC2VP70 |
| N/A | GNDA18 | AU16 | | |
| N/A | TXPPAD18 | AW18 | | |
| N/A | TXNPAD18 | AW19 | | |
| N/A | VTTXPAD18 | AV19 | | |
| N/A | AVCCAUXTX18 | AV18 | | |
| N/A | AVCCAUXRX19 | AV21 | | |
| N/A | VTRXPAD19 | AV22 | | |
| N/A | RXNPAD19 | AW21 | | |
| N/A | RXPPAD19 | AW22 | | |
| N/A | GNDA19 | AU24 | | |
| N/A | TXPPAD19 | AW23 | | |
| N/A | TXNPAD19 | AW24 | | |
| N/A | VTTXPAD19 | AV24 | | |
| N/A | AVCCAUXTX19 | AV23 | | |
| N/A | AVCCAUXRX20 | AV25 | | |
| N/A | VTRXPAD20 | AV26 | | |
| N/A | RXNPAD20 | AW25 | | |
| N/A | RXPPAD20 | AW26 | | |
| N/A | GNDA20 | AU27 | | |
| N/A | TXPPAD20 | AW27 | | |
| N/A | TXNPAD20 | AW28 | | |
| N/A | VTTXPAD20 | AV28 | | |
| N/A | AVCCAUXTX20 | AV27 | | |
| N/A | AVCCAUXRX21 | AV29 | | |
| N/A | VTRXPAD21 | AV30 | | |
| N/A | RXNPAD21 | AW29 | | |
| N/A | RXPPAD21 | AW30 | | |
| N/A | GNDA21 | AU31 | | |
| N/A | TXPPAD21 | AW31 | | |
| N/A | TXNPAD21 | AW32 | | |
| N/A | VTTXPAD21 | AV32 | | |
| N/A | AVCCAUXTX21 | AV31 | | |
| N/A | AVCCAUXRX23 | AV33 | | |
| N/A | VTRXPAD23 | AV34 | | |
| N/A | RXNPAD23 | AW33 | | |
| N/A | RXPPAD23 | AW34 | | |
| N/A | GNDA23 | AU34 | | |
| N/A | TXPPAD23 | AW35 | | |

*Table 12:* **FF1517 — XC2VP50 and XC2VP70**

| Bank | Pin Description | Pin Number | No Connects | |
|---|---|---|---|---|
| | | | XC2VP50 | XC2VP70 |
| N/A | TXNPAD23 | AW36 | | |
| N/A | VTTXPAD23 | AV36 | | |
| N/A | AVCCAUXTX23 | AV35 | | |
| | | | | |
| N/A | VCCINT | AH28 | | |
| N/A | VCCINT | M28 | | |
| N/A | VCCINT | AG27 | | |
| N/A | VCCINT | N27 | | |
| N/A | VCCINT | AF26 | | |
| N/A | VCCINT | P26 | | |
| N/A | VCCINT | AE25 | | |
| N/A | VCCINT | AD25 | | |
| N/A | VCCINT | AC25 | | |
| N/A | VCCINT | AB25 | | |
| N/A | VCCINT | AA25 | | |
| N/A | VCCINT | Y25 | | |
| N/A | VCCINT | W25 | | |
| N/A | VCCINT | V25 | | |
| N/A | VCCINT | U25 | | |
| N/A | VCCINT | T25 | | |
| N/A | VCCINT | R25 | | |
| N/A | VCCINT | AE24 | | |
| N/A | VCCINT | AD24 | | |
| N/A | VCCINT | T24 | | |
| N/A | VCCINT | R24 | | |
| N/A | VCCINT | AE23 | | |
| N/A | VCCINT | R23 | | |
| N/A | VCCINT | AE22 | | |
| N/A | VCCINT | R22 | | |
| N/A | VCCINT | AE21 | | |
| N/A | VCCINT | R21 | | |
| N/A | VCCINT | AE20 | | |
| N/A | VCCINT | R20 | | |
| N/A | VCCINT | AE19 | | |
| N/A | VCCINT | R19 | | |
| N/A | VCCINT | AE18 | | |
| N/A | VCCINT | R18 | | |
| N/A | VCCINT | AE17 | | |

*Table 12:* **FF1517 — XC2VP50 and XC2VP70**

| Bank | Pin Description | Pin Number | No Connects | |
|---|---|---|---|---|
| | | | XC2VP50 | XC2VP70 |
| N/A | VCCINT | R17 | | |
| N/A | VCCINT | AE16 | | |
| N/A | VCCINT | AD16 | | |
| N/A | VCCINT | T16 | | |
| N/A | VCCINT | R16 | | |
| N/A | VCCINT | AE15 | | |
| N/A | VCCINT | AD15 | | |
| N/A | VCCINT | AC15 | | |
| N/A | VCCINT | AB15 | | |
| N/A | VCCINT | AA15 | | |
| N/A | VCCINT | Y15 | | |
| N/A | VCCINT | W15 | | |
| N/A | VCCINT | V15 | | |
| N/A | VCCINT | U15 | | |
| N/A | VCCINT | T15 | | |
| N/A | VCCINT | R15 | | |
| N/A | VCCINT | AF14 | | |
| N/A | VCCINT | P14 | | |
| N/A | VCCINT | AG13 | | |
| N/A | VCCINT | N13 | | |
| N/A | VCCINT | AH12 | | |
| N/A | VCCINT | M12 | | |
| N/A | VCCAUX | AV39 | | |
| N/A | VCCAUX | AA39 | | |
| N/A | VCCAUX | Y39 | | |
| N/A | VCCAUX | W39 | | |
| N/A | VCCAUX | B39 | | |
| N/A | VCCAUX | AW38 | | |
| N/A | VCCAUX | Y38 | | |
| N/A | VCCAUX | A38 | | |
| N/A | VCCAUX | AR35 | | |
| N/A | VCCAUX | E35 | | |
| N/A | VCCAUX | AP34 | | |
| N/A | VCCAUX | F34 | | |
| N/A | VCCAUX | AW20 | | |
| N/A | VCCAUX | AV20 | | |
| N/A | VCCAUX | B20 | | |
| N/A | VCCAUX | A20 | | |

*Table 12:* **FF1517 — XC2VP50 and XC2VP70**

| Bank | Pin Description | Pin Number | No Connects | |
|---|---|---|---|---|
| | | | XC2VP50 | XC2VP70 |
| N/A | VCCAUX | AP6 | | |
| N/A | VCCAUX | F6 | | |
| N/A | VCCAUX | AR5 | | |
| N/A | VCCAUX | E5 | | |
| N/A | VCCAUX | AW2 | | |
| N/A | VCCAUX | Y2 | | |
| N/A | VCCAUX | A2 | | |
| N/A | VCCAUX | AV1 | | |
| N/A | VCCAUX | AA1 | | |
| N/A | VCCAUX | Y1 | | |
| N/A | VCCAUX | W1 | | |
| N/A | VCCAUX | B1 | | |
| | | | | |
| N/A | GND | A3 | | |
| N/A | GND | AV2 | | |
| N/A | GND | AU2 | | |
| N/A | GND | AA2 | | |
| N/A | GND | W2 | | |
| N/A | GND | C2 | | |
| N/A | GND | B2 | | |
| N/A | GND | AU1 | | |
| N/A | GND | AM1 | | |
| N/A | GND | AH1 | | |
| N/A | GND | AD1 | | |
| N/A | GND | T1 | | |
| N/A | GND | M1 | | |
| N/A | GND | H1 | | |
| N/A | GND | C1 | | |
| N/A | GND | AD5 | | |
| N/A | GND | T5 | | |
| N/A | GND | M5 | | |
| N/A | GND | H5 | | |
| N/A | GND | AU4 | | |
| N/A | GND | AT4 | | |
| N/A | GND | D4 | | |
| N/A | GND | C4 | | |
| N/A | GND | AW3 | | |
| N/A | GND | AV3 | | |

*Table 12:* **FF1517 — XC2VP50 and XC2VP70**

| Bank | Pin Description | Pin Number | No Connects | |
|---|---|---|---|---|
| | | | XC2VP50 | XC2VP70 |
| N/A | GND | AU3 | | |
| N/A | GND | AT3 | | |
| N/A | GND | D3 | | |
| N/A | GND | C3 | | |
| N/A | GND | B3 | | |
| N/A | GND | AN12 | | |
| N/A | GND | G12 | | |
| N/A | GND | C12 | | |
| N/A | GND | Y10 | | |
| N/A | GND | AH9 | | |
| N/A | GND | AD9 | | |
| N/A | GND | T9 | | |
| N/A | GND | M9 | | |
| N/A | GND | AU8 | | |
| N/A | GND | AN8 | | |
| N/A | GND | G8 | | |
| N/A | GND | C8 | | |
| N/A | GND | Y6 | | |
| N/A | GND | AM5 | | |
| N/A | GND | AH5 | | |
| N/A | GND | T17 | | |
| N/A | GND | AT16 | | |
| N/A | GND | AN16 | | |
| N/A | GND | AJ16 | | |
| N/A | GND | AC16 | | |
| N/A | GND | AB16 | | |
| N/A | GND | AA16 | | |
| N/A | GND | Y16 | | |
| N/A | GND | W16 | | |
| N/A | GND | V16 | | |
| N/A | GND | U16 | | |
| N/A | GND | L16 | | |
| N/A | GND | G16 | | |
| N/A | GND | D16 | | |
| N/A | GND | AU12 | | |
| N/A | GND | AB18 | | |
| N/A | GND | AA18 | | |
| N/A | GND | Y18 | | |

*Table 12:* **FF1517 — XC2VP50 and XC2VP70**

| Bank | Pin Description | Pin Number | No Connects | |
|---|---|---|---|---|
| | | | XC2VP50 | XC2VP70 |
| N/A | GND | W18 | | |
| N/A | GND | V18 | | |
| N/A | GND | U18 | | |
| N/A | GND | T18 | | |
| N/A | GND | AD17 | | |
| N/A | GND | AC17 | | |
| N/A | GND | AB17 | | |
| N/A | GND | AA17 | | |
| N/A | GND | Y17 | | |
| N/A | GND | W17 | | |
| N/A | GND | V17 | | |
| N/A | GND | U17 | | |
| N/A | GND | P20 | | |
| N/A | GND | L20 | | |
| N/A | GND | G20 | | |
| N/A | GND | C20 | | |
| N/A | GND | AD19 | | |
| N/A | GND | AC19 | | |
| N/A | GND | AB19 | | |
| N/A | GND | AA19 | | |
| N/A | GND | Y19 | | |
| N/A | GND | W19 | | |
| N/A | GND | V19 | | |
| N/A | GND | U19 | | |
| N/A | GND | T19 | | |
| N/A | GND | AD18 | | |
| N/A | GND | AC18 | | |
| N/A | GND | U21 | | |
| N/A | GND | T21 | | |
| N/A | GND | AU20 | | |
| N/A | GND | AN20 | | |
| N/A | GND | AJ20 | | |
| N/A | GND | AF20 | | |
| N/A | GND | AD20 | | |
| N/A | GND | AC20 | | |
| N/A | GND | AB20 | | |
| N/A | GND | AA20 | | |
| N/A | GND | Y20 | | |

*Table 12:* **FF1517 — XC2VP50 and XC2VP70**

| Bank | Pin Description | Pin Number | No Connects | |
|---|---|---|---|---|
| | | | XC2VP50 | XC2VP70 |
| N/A | GND | W20 | | |
| N/A | GND | V20 | | |
| N/A | GND | U20 | | |
| N/A | GND | T20 | | |
| N/A | GND | AC22 | | |
| N/A | GND | AB22 | | |
| N/A | GND | AA22 | | |
| N/A | GND | Y22 | | |
| N/A | GND | W22 | | |
| N/A | GND | V22 | | |
| N/A | GND | U22 | | |
| N/A | GND | T22 | | |
| N/A | GND | AD21 | | |
| N/A | GND | AC21 | | |
| N/A | GND | AB21 | | |
| N/A | GND | AA21 | | |
| N/A | GND | Y21 | | |
| N/A | GND | W21 | | |
| N/A | GND | V21 | | |
| N/A | GND | B38 | | |
| N/A | GND | AW37 | | |
| N/A | GND | AV37 | | |
| N/A | GND | AU37 | | |
| N/A | GND | AT37 | | |
| N/A | GND | D37 | | |
| N/A | GND | C37 | | |
| N/A | GND | B37 | | |
| N/A | GND | A37 | | |
| N/A | GND | AU36 | | |
| N/A | GND | AT36 | | |
| N/A | GND | D36 | | |
| N/A | GND | C36 | | |
| N/A | GND | AM35 | | |
| N/A | GND | AH35 | | |
| N/A | GND | AD35 | | |
| N/A | GND | T35 | | |
| N/A | GND | M35 | | |
| N/A | GND | H35 | | |

*Table 12:* **FF1517 — XC2VP50 and XC2VP70**

| Bank | Pin Description | Pin Number | No Connects | |
|---|---|---|---|---|
| | | | XC2VP50 | XC2VP70 |
| N/A | GND | Y34 | | |
| N/A | GND | AU32 | | |
| N/A | GND | AN32 | | |
| N/A | GND | G32 | | |
| N/A | GND | C32 | | |
| N/A | GND | AH31 | | |
| N/A | GND | AD31 | | |
| N/A | GND | T31 | | |
| N/A | GND | M31 | | |
| N/A | GND | Y30 | | |
| N/A | GND | AU28 | | |
| N/A | GND | AN28 | | |
| N/A | GND | G28 | | |
| N/A | GND | C28 | | |
| N/A | GND | AT24 | | |
| N/A | GND | AN24 | | |
| N/A | GND | AJ24 | | |
| N/A | GND | AC24 | | |
| N/A | GND | AB24 | | |
| N/A | GND | AA24 | | |
| N/A | GND | Y24 | | |
| N/A | GND | W24 | | |
| N/A | GND | V24 | | |
| N/A | GND | U24 | | |
| N/A | GND | L24 | | |
| N/A | GND | G24 | | |
| N/A | GND | D24 | | |
| N/A | GND | AD23 | | |
| N/A | GND | AC23 | | |
| N/A | GND | AB23 | | |
| N/A | GND | AA23 | | |
| N/A | GND | Y23 | | |
| N/A | GND | W23 | | |
| N/A | GND | V23 | | |
| N/A | GND | U23 | | |
| N/A | GND | T23 | | |
| N/A | GND | AD22 | | |
| N/A | GND | AU39 | | |

*Table 12:* **FF1517 — XC2VP50 and XC2VP70**

| Bank | Pin Description | Pin Number | No Connects | |
|---|---|---|---|---|
| | | | XC2VP50 | XC2VP70 |
| N/A | GND | AM39 | | |
| N/A | GND | AH39 | | |
| N/A | GND | AD39 | | |
| N/A | GND | T39 | | |
| N/A | GND | M39 | | |
| N/A | GND | H39 | | |
| N/A | GND | C39 | | |
| N/A | GND | AV38 | | |
| N/A | GND | AU38 | | |
| N/A | GND | AA38 | | |
| N/A | GND | W38 | | |
| N/A | GND | C38 | | |

**Notes:**
1. See Table 4 for an explanation of the signals available on this pin.

## FF1517 Flip-Chip Fine-Pitch BGA Package Specifications (1.00mm pitch)

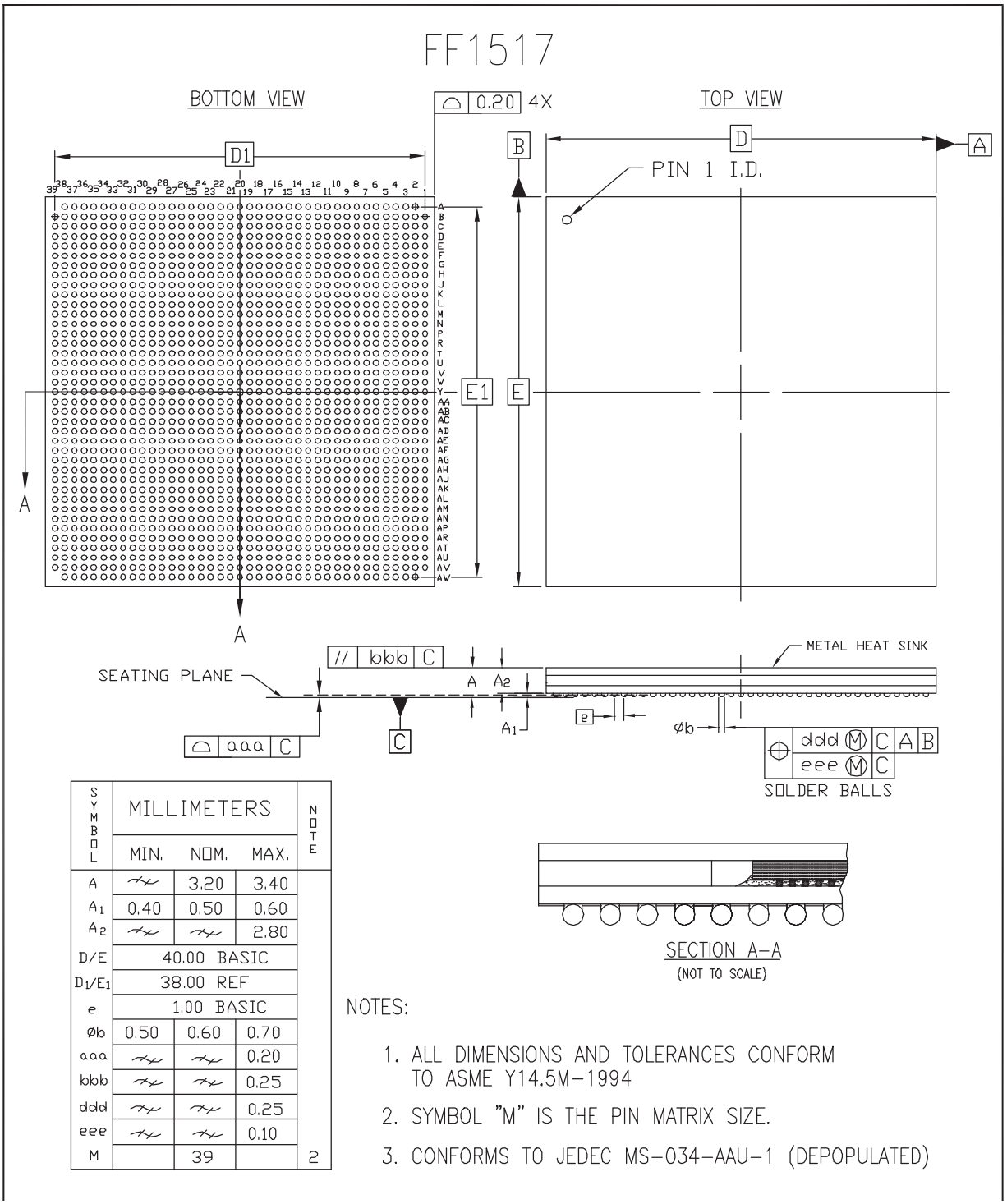


| SYMBOL | MILLIMETERS | | | NOTE |
|---|---|---|---|---|
| | MIN. | NOM. | MAX. | |
| A | | 3.20 | 3.40 | |
| $A_1$ | 0.40 | 0.50 | 0.60 | |
| $A_2$ | | | 2.80 | |
| D/E | 40.00 BASIC | | | |
| $D_1/E_1$ | 38.00 REF | | | |
| e | 1.00 BASIC | | | |
| Øb | 0.50 | 0.60 | 0.70 | |
| aaa | | | 0.20 | |
| bbb | | | 0.25 | |
| ddd | | | 0.25 | |
| eee | | | 0.10 | |
| M | | 39 | | 2 |

*Figure 8:* **FF1517 Flip-Chip Fine-Pitch BGA Package Specifications**

## FF1704 Flip-Chip Fine-Pitch BGA Package

As shown in Table 13, XC2VP70 and XC2VP100 Virtex-II Pro devices are available in the FF1704 flip-chip fine-pitch BGA package. Following this table are the FF1704 Flip-Chip Fine-Pitch BGA Package Specifications (1.00mm pitch).

*Table 13:* **FF1704 — XC2VP70, XC2VPX70, and XC2VP100**

| Bank | Pin Description | | Pin Number | No Connects | |
|---|---|---|---|---|---|
| | Virtex-II Pro Devices | XC2VPX70 (if Different) | | XC2VP70, XC2VPX70 | XC2VP100 |
| 0 | IO_L01N_0/VRP_0 | | G34 | | |
| 0 | IO_L01P_0/VRN_0 | | H34 | | |
| 0 | IO_L02N_0 | | F34 | | |
| 0 | IO_L02P_0 | | E34 | | |
| 0 | IO_L03N_0 | | C34 | | |
| 0 | IO_L03P_0/VREF_0 | | D34 | | |
| 0 | IO_L05_0/No_Pair | | K32 | | |
| 0 | IO_L06N_0 | | H33 | | |
| 0 | IO_L06P_0 | | J33 | | |
| 0 | IO_L07N_0 | | F33 | | |
| 0 | IO_L07P_0 | | G33 | | |
| 0 | IO_L08N_0 | | E33 | | |
| 0 | IO_L08P_0 | | D33 | | |
| 0 | IO_L09N_0 | | H32 | | |
| 0 | IO_L09P_0/VREF_0 | | J32 | | |
| 0 | IO_L19N_0 | | E32 | | |
| 0 | IO_L19P_0 | | F32 | | |
| 0 | IO_L20N_0 | | C33 | | |
| 0 | IO_L20P_0 | | C32 | | |
| 0 | IO_L21N_0 | | K31 | | |
| 0 | IO_L21P_0 | | L31 | | |
| 0 | IO_L25N_0 | | H31 | | |
| 0 | IO_L25P_0 | | J31 | | |
| 0 | IO_L26N_0 | | G31 | | |
| 0 | IO_L26P_0 | | F31 | | |
| 0 | IO_L27N_0 | | D31 | | |
| 0 | IO_L27P_0/VREF_0 | | E31 | | |
| 0 | IO_L28N_0 | | L30 | | |
| 0 | IO_L28P_0 | | M30 | | |
| 0 | IO_L29N_0 | | J30 | | |
| 0 | IO_L29P_0 | | K30 | | |
| 0 | IO_L30N_0 | | G30 | | |
| 0 | IO_L30P_0 | | H30 | | |

*Table 13:* **FF1704 — XC2VP70, XC2VPX70, and XC2VP100**

| Bank | Pin Description | | Pin Number | No Connects | |
|---|---|---|---|---|---|
| | Virtex-II Pro Devices | XC2VPX70 (if Different) | | XC2VP70, XC2VPX70 | XC2VP100 |
| 0 | IO_L34N_0 | | E30 | | |
| 0 | IO_L34P_0 | | F30 | | |
| 0 | IO_L35N_0 | | D30 | | |
| 0 | IO_L35P_0 | | C30 | | |
| 0 | IO_L36N_0 | | M28 | | |
| 0 | IO_L36P_0/VREF_0 | | M29 | | |
| 0 | IO_L78N_0 | | K29 | NC | |
| 0 | IO_L78P_0 | | L29 | NC | |
| 0 | IO_L83_0/No_Pair | | H29 | NC | |
| 0 | IO_L84N_0 | | F29 | NC | |
| 0 | IO_L84P_0 | | G29 | NC | |
| 0 | IO_L85N_0 | | D29 | NC | |
| 0 | IO_L85P_0 | | E29 | NC | |
| 0 | IO_L86N_0 | | L28 | NC | |
| 0 | IO_L86P_0 | | K28 | NC | |
| 0 | IO_L87N_0 | | H28 | NC | |
| 0 | IO_L87P_0/VREF_0 | | J28 | NC | |
| 0 | IO_L37N_0 | | E28 | | |
| 0 | IO_L37P_0 | | F28 | | |
| 0 | IO_L38N_0 | | C29 | | |
| 0 | IO_L38P_0 | | C28 | | |
| 0 | IO_L39N_0 | | L27 | | |
| 0 | IO_L39P_0 | | M27 | | |
| 0 | IO_L43N_0 | | J27 | | |
| 0 | IO_L43P_0 | | K27 | | |
| 0 | IO_L44N_0 | | H27 | | |
| 0 | IO_L44P_0 | | G27 | | |
| 0 | IO_L45N_0 | | E27 | | |
| 0 | IO_L45P_0/VREF_0 | | F27 | | |
| 0 | IO_L46N_0 | | M25 | | |
| 0 | IO_L46P_0 | | M26 | | |
| 0 | IO_L47N_0 | | L26 | | |
| 0 | IO_L47P_0 | | K26 | | |
| 0 | IO_L48N_0 | | H26 | | |
| 0 | IO_L48P_0 | | J26 | | |
| 0 | IO_L49N_0 | | F26 | | |

*Table 13:* **FF1704 — XC2VP70, XC2VPX70, and XC2VP100**

| Bank | Pin Description | | Pin Number | No Connects | |
|---|---|---|---|---|---|
| | Virtex-II Pro Devices | XC2VPX70 (if Different) | | XC2VP70, XC2VPX70 | XC2VP100 |
| 0 | IO_L49P_0 | | G26 | | |
| 0 | IO_L50_0/No_Pair | | D27 | | |
| 0 | IO_L53_0/No_Pair | | D26 | | |
| 0 | IO_L54N_0 | | K25 | | |
| 0 | IO_L54P_0 | | L25 | | |
| 0 | IO_L55N_0 | | G25 | | |
| 0 | IO_L55P_0 | | H25 | | |
| 0 | IO_L56N_0 | | E26 | | |
| 0 | IO_L56P_0 | | E25 | | |
| 0 | IO_L57N_0 | | C25 | | |
| 0 | IO_L57P_0/VREF_0 | | C26 | | |
| 0 | IO_L58N_0 | | L24 | | |
| 0 | IO_L58P_0 | | M24 | | |
| 0 | IO_L59N_0 | | J24 | | |
| 0 | IO_L59P_0 | | K24 | | |
| 0 | IO_L60N_0 | | G24 | | |
| 0 | IO_L60P_0 | | H24 | | |
| 0 | IO_L64N_0 | | E24 | | |
| 0 | IO_L64P_0 | | F24 | | |
| 0 | IO_L65N_0 | | D24 | | |
| 0 | IO_L65P_0 | | C24 | | |
| 0 | IO_L66N_0 | | M22 | | |
| 0 | IO_L66P_0/VREF_0 | | M23 | | |
| 0 | IO_L67N_0 | | K23 | | |
| 0 | IO_L67P_0 | | L23 | | |
| 0 | IO_L68N_0 | | J23 | | |
| 0 | IO_L68P_0 | | H23 | | |
| 0 | IO_L69N_0 | | E23 | | |
| 0 | IO_L69P_0/VREF_0 | | F23 | | |
| 0 | IO_L73N_0 | | C23 | | |
| 0 | IO_L73P_0 | | D23 | | |
| 0 | IO_L74N_0/GCLK7P | | K22 | | |
| 0 | IO_L74P_0/GCLK6S | | J22 | | |
| 0 | IO_L75N_0/GCLK5P | BREFCLKN | F22 | | |
| 0 | IO_L75P_0/GCLK4S | BREFCLKP | G22 | | |

*Table 13:* **FF1704 — XC2VP70, XC2VPX70, and XC2VP100**

| Bank | Pin Description | | Pin Number | No Connects | |
|---|---|---|---|---|---|
| | Virtex-II Pro Devices | XC2VPX70 (if Different) | | XC2VP70, XC2VPX70 | XC2VP100 |
| 1 | IO_L75N_1/GCLK3P | | G21 | | |
| 1 | IO_L75P_1/GCLK2S | | F21 | | |
| 1 | IO_L74N_1/GCLK1P | | J21 | | |
| 1 | IO_L74P_1/GCLK0S | | K21 | | |
| 1 | IO_L73N_1 | | D20 | | |
| 1 | IO_L73P_1 | | C20 | | |
| 1 | IO_L69N_1/VREF_1 | | F20 | | |
| 1 | IO_L69P_1 | | E20 | | |
| 1 | IO_L68N_1 | | H20 | | |
| 1 | IO_L68P_1 | | J20 | | |
| 1 | IO_L67N_1 | | L20 | | |
| 1 | IO_L67P_1 | | K20 | | |
| 1 | IO_L66N_1/VREF_1 | | M20 | | |
| 1 | IO_L66P_1 | | M21 | | |
| 1 | IO_L65N_1 | | C19 | | |
| 1 | IO_L65P_1 | | D19 | | |
| 1 | IO_L64N_1 | | F19 | | |
| 1 | IO_L64P_1 | | E19 | | |
| 1 | IO_L60N_1 | | H19 | | |
| 1 | IO_L60P_1 | | G19 | | |
| 1 | IO_L59N_1 | | K19 | | |
| 1 | IO_L59P_1 | | J19 | | |
| 1 | IO_L58N_1 | | M19 | | |
| 1 | IO_L58P_1 | | L19 | | |
| 1 | IO_L57N_1/VREF_1 | | C17 | | |
| 1 | IO_L57P_1 | | C18 | | |
| 1 | IO_L56N_1 | | E18 | | |
| 1 | IO_L56P_1 | | E17 | | |
| 1 | IO_L55N_1 | | H18 | | |
| 1 | IO_L55P_1 | | G18 | | |
| 1 | IO_L54N_1 | | L18 | | |
| 1 | IO_L54P_1 | | K18 | | |
| 1 | IO_L53_1/No_Pair | | D17 | | |
| 1 | IO_L50_1/No_Pair | | D16 | | |
| 1 | IO_L49N_1 | | G17 | | |
| 1 | IO_L49P_1 | | F17 | | |

*Table 13:* **FF1704 — XC2VP70, XC2VPX70, and XC2VP100**

| Bank | Pin Description | | Pin Number | No Connects | |
|---|---|---|---|---|---|
| | Virtex-II Pro Devices | XC2VPX70 (if Different) | | XC2VP70, XC2VPX70 | XC2VP100 |
| 1 | IO_L48N_1 | | J17 | | |
| 1 | IO_L48P_1 | | H17 | | |
| 1 | IO_L47N_1 | | K17 | | |
| 1 | IO_L47P_1 | | L17 | | |
| 1 | IO_L46N_1 | | M17 | | |
| 1 | IO_L46P_1 | | M18 | | |
| 1 | IO_L45N_1/VREF_1 | | F16 | | |
| 1 | IO_L45P_1 | | E16 | | |
| 1 | IO_L44N_1 | | G16 | | |
| 1 | IO_L44P_1 | | H16 | | |
| 1 | IO_L43N_1 | | K16 | | |
| 1 | IO_L43P_1 | | J16 | | |
| 1 | IO_L39N_1 | | M16 | | |
| 1 | IO_L39P_1 | | L16 | | |
| 1 | IO_L38N_1 | | C15 | | |
| 1 | IO_L38P_1 | | C14 | | |
| 1 | IO_L37N_1 | | F15 | | |
| 1 | IO_L37P_1 | | E15 | | |
| 1 | IO_L87N_1/VREF_1 | | J15 | NC | |
| 1 | IO_L87P_1 | | H15 | NC | |
| 1 | IO_L86N_1 | | K15 | NC | |
| 1 | IO_L86P_1 | | L15 | NC | |
| 1 | IO_L85N_1 | | E14 | NC | |
| 1 | IO_L85P_1 | | D14 | NC | |
| 1 | IO_L84N_1 | | G14 | NC | |
| 1 | IO_L84P_1 | | F14 | NC | |
| 1 | IO_L83_1/No_Pair | | H14 | NC | |
| 1 | IO_L78N_1 | | L14 | NC | |
| 1 | IO_L78P_1 | | K14 | NC | |
| 1 | IO_L36N_1/VREF_1 | | M14 | | |
| 1 | IO_L36P_1 | | M15 | | |
| 1 | IO_L35N_1 | | C13 | | |
| 1 | IO_L35P_1 | | D13 | | |
| 1 | IO_L34N_1 | | F13 | | |
| 1 | IO_L34P_1 | | E13 | | |
| 1 | IO_L30N_1 | | H13 | | |

*Table 13:* **FF1704 — XC2VP70, XC2VPX70, and XC2VP100**

| Bank | Pin Description | | Pin Number | No Connects | |
|---|---|---|---|---|---|
| | Virtex-II Pro Devices | XC2VPX70 (if Different) | | XC2VP70, XC2VPX70 | XC2VP100 |
| 1 | IO_L30P_1 | | G13 | | |
| 1 | IO_L29N_1 | | K13 | | |
| 1 | IO_L29P_1 | | J13 | | |
| 1 | IO_L28N_1 | | M13 | | |
| 1 | IO_L28P_1 | | L13 | | |
| 1 | IO_L27N_1/VREF_1 | | E12 | | |
| 1 | IO_L27P_1 | | D12 | | |
| 1 | IO_L26N_1 | | F12 | | |
| 1 | IO_L26P_1 | | G12 | | |
| 1 | IO_L25N_1 | | J12 | | |
| 1 | IO_L25P_1 | | H12 | | |
| 1 | IO_L21N_1 | | L12 | | |
| 1 | IO_L21P_1 | | K12 | | |
| 1 | IO_L20N_1 | | C11 | | |
| 1 | IO_L20P_1 | | C10 | | |
| 1 | IO_L19N_1 | | F11 | | |
| 1 | IO_L19P_1 | | E11 | | |
| 1 | IO_L09N_1/VREF_1 | | J11 | | |
| 1 | IO_L09P_1 | | H11 | | |
| 1 | IO_L08N_1 | | D10 | | |
| 1 | IO_L08P_1 | | E10 | | |
| 1 | IO_L07N_1 | | G10 | | |
| 1 | IO_L07P_1 | | F10 | | |
| 1 | IO_L06N_1 | | J10 | | |
| 1 | IO_L06P_1 | | H10 | | |
| 1 | IO_L05_1/No_Pair | | K11 | | |
| 1 | IO_L03N_1/VREF_1 | | D9 | | |
| 1 | IO_L03P_1 | | C9 | | |
| 1 | IO_L02N_1 | | E9 | | |
| 1 | IO_L02P_1 | | F9 | | |
| 1 | IO_L01N_1/VRP_1 | | H9 | | |
| 1 | IO_L01P_1/VRN_1 | | G9 | | |
| | | | | | |
| 2 | IO_L01N_2/VRP_2 | | C5 | | |
| 2 | IO_L01P_2/VRN_2 | | C6 | | |
| 2 | IO_L02N_2 | | E7 | | |

*Table 13:* **FF1704 — XC2VP70, XC2VPX70, and XC2VP100**

| Bank | Pin Description | | Pin Number | No Connects | |
|---|---|---|---|---|---|
| | Virtex-II Pro Devices | XC2VPX70 (if Different) | | XC2VP70, XC2VPX70 | XC2VP100 |
| 2 | IO_L02P_2 | | D7 | | |
| 2 | IO_L03N_2 | | E6 | | |
| 2 | IO_L03P_2 | | D6 | | |
| 2 | IO_L04N_2/VREF_2 | | G6 | | |
| 2 | IO_L04P_2 | | F7 | | |
| 2 | IO_L05N_2 | | D3 | | |
| 2 | IO_L05P_2 | | E3 | | |
| 2 | IO_L06N_2 | | D1 | | |
| 2 | IO_L06P_2 | | D2 | | |
| 2 | IO_L73N_2 | | E1 | | |
| 2 | IO_L73P_2 | | E2 | | |
| 2 | IO_L74N_2 | | F4 | | |
| 2 | IO_L74P_2 | | F3 | | |
| 2 | IO_L75N_2 | | F1 | | |
| 2 | IO_L75P_2 | | F2 | | |
| 2 | IO_L76N_2/VREF_2 | | G3 | | |
| 2 | IO_L76P_2 | | G4 | | |
| 2 | IO_L77N_2 | | G2 | | |
| 2 | IO_L77P_2 | | G1 | | |
| 2 | IO_L78N_2 | | G5 | | |
| 2 | IO_L78P_2 | | H6 | | |
| 2 | IO_L79N_2 | | H4 | | |
| 2 | IO_L79P_2 | | H5 | | |
| 2 | IO_L80N_2 | | H3 | | |
| 2 | IO_L80P_2 | | H2 | | |
| 2 | IO_L81N_2 | | H7 | | |
| 2 | IO_L81P_2 | | J8 | | |
| 2 | IO_L82N_2/VREF_2 | | J6 | | |
| 2 | IO_L82P_2 | | J7 | | |
| 2 | IO_L83N_2 | | J5 | | |
| 2 | IO_L83P_2 | | J4 | | |
| 2 | IO_L84N_2 | | J1 | | |
| 2 | IO_L84P_2 | | J2 | | |
| 2 | IO_L07N_2 | | K9 | | |
| 2 | IO_L07P_2 | | L10 | | |
| 2 | IO_L08N_2 | | K6 | | |

*Table 13:* **FF1704 — XC2VP70, XC2VPX70, and XC2VP100**

| Bank | Pin Description | | Pin Number | No Connects | |
|---|---|---|---|---|---|
| | Virtex-II Pro Devices | XC2VPX70 (if Different) | | XC2VP70, XC2VPX70 | XC2VP100 |
| 2 | IO_L08P_2 | | K5 | | |
| 2 | IO_L09N_2 | | K8 | | |
| 2 | IO_L09P_2 | | K7 | | |
| 2 | IO_L10N_2/VREF_2 | | K2 | | |
| 2 | IO_L10P_2 | | K1 | | |
| 2 | IO_L11N_2 | | L8 | | |
| 2 | IO_L11P_2 | | L9 | | |
| 2 | IO_L12N_2 | | L6 | | |
| 2 | IO_L12P_2 | | L7 | | |
| 2 | IO_L13N_2 | | K3 | | |
| 2 | IO_L13P_2 | | L3 | | |
| 2 | IO_L14N_2 | | L5 | | |
| 2 | IO_L14P_2 | | L4 | | |
| 2 | IO_L15N_2 | | L1 | | |
| 2 | IO_L15P_2 | | L2 | | |
| 2 | IO_L16N_2/VREF_2 | | M7 | | |
| 2 | IO_L16P_2 | | M8 | | |
| 2 | IO_L17N_2 | | M11 | | |
| 2 | IO_L17P_2 | | M12 | | |
| 2 | IO_L18N_2 | | M9 | | |
| 2 | IO_L18P_2 | | M10 | | |
| 2 | IO_L19N_2 | | M2 | | |
| 2 | IO_L19P_2 | | M3 | | |
| 2 | IO_L20N_2 | | M4 | | |
| 2 | IO_L20P_2 | | M5 | | |
| 2 | IO_L21N_2 | | N7 | | |
| 2 | IO_L21P_2 | | N8 | | |
| 2 | IO_L22N_2/VREF_2 | | N5 | | |
| 2 | IO_L22P_2 | | N6 | | |
| 2 | IO_L23N_2 | | N9 | | |
| 2 | IO_L23P_2 | | N10 | | |
| 2 | IO_L24N_2 | | N3 | | |
| 2 | IO_L24P_2 | | N4 | | |
| 2 | IO_L25N_2 | | N1 | | |
| 2 | IO_L25P_2 | | N2 | | |
| 2 | IO_L26N_2 | | N11 | | |

*Table 13:* **FF1704 — XC2VP70, XC2VPX70, and XC2VP100**

| Bank | Pin Description | | Pin Number | No Connects | |
|---|---|---|---|---|---|
| | Virtex-II Pro Devices | XC2VPX70 (if Different) | | XC2VP70, XC2VPX70 | XC2VP100 |
| 2 | IO_L26P_2 | | N12 | | |
| 2 | IO_L27N_2 | | P9 | | |
| 2 | IO_L27P_2 | | P10 | | |
| 2 | IO_L28N_2/VREF_2 | | P7 | | |
| 2 | IO_L28P_2 | | P8 | | |
| 2 | IO_L29N_2 | | P11 | | |
| 2 | IO_L29P_2 | | P12 | | |
| 2 | IO_L30N_2 | | P5 | | |
| 2 | IO_L30P_2 | | P6 | | |
| 2 | IO_L31N_2 | | P1 | | |
| 2 | IO_L31P_2 | | P2 | | |
| 2 | IO_L32N_2 | | R9 | | |
| 2 | IO_L32P_2 | | R10 | | |
| 2 | IO_L33N_2 | | R5 | | |
| 2 | IO_L33P_2 | | R6 | | |
| 2 | IO_L34N_2/VREF_2 | | P3 | | |
| 2 | IO_L34P_2 | | R3 | | |
| 2 | IO_L35N_2 | | R1 | | |
| 2 | IO_L35P_2 | | R2 | | |
| 2 | IO_L36N_2 | | R11 | | |
| 2 | IO_L36P_2 | | R12 | | |
| 2 | IO_L37N_2 | | T6 | | |
| 2 | IO_L37P_2 | | T7 | | |
| 2 | IO_L38N_2 | | T8 | | |
| 2 | IO_L38P_2 | | R8 | | |
| 2 | IO_L39N_2 | | T4 | | |
| 2 | IO_L39P_2 | | T5 | | |
| 2 | IO_L40N_2/VREF_2 | | T2 | | |
| 2 | IO_L40P_2 | | T3 | | |
| 2 | IO_L41N_2 | | T10 | | |
| 2 | IO_L41P_2 | | T11 | | |
| 2 | IO_L42N_2 | | U7 | | |
| 2 | IO_L42P_2 | | U8 | | |
| 2 | IO_L43N_2 | | U5 | | |
| 2 | IO_L43P_2 | | U6 | | |
| 2 | IO_L44N_2 | | U9 | | |

*Table 13:* **FF1704 — XC2VP70, XC2VPX70, and XC2VP100**

| Bank | Pin Description | | Pin Number | No Connects | |
|---|---|---|---|---|---|
| | Virtex-II Pro Devices | XC2VPX70 (if Different) | | XC2VP70, XC2VPX70 | XC2VP100 |
| 2 | IO_L44P_2 | | U10 | | |
| 2 | IO_L45N_2 | | U3 | | |
| 2 | IO_L45P_2 | | U4 | | |
| 2 | IO_L46N_2/VREF_2 | | U1 | | |
| 2 | IO_L46P_2 | | U2 | | |
| 2 | IO_L47N_2 | | T12 | | |
| 2 | IO_L47P_2 | | U12 | | |
| 2 | IO_L48N_2 | | V10 | | |
| 2 | IO_L48P_2 | | V11 | | |
| 2 | IO_L49N_2 | | V7 | | |
| 2 | IO_L49P_2 | | V8 | | |
| 2 | IO_L50N_2 | | U11 | | |
| 2 | IO_L50P_2 | | V12 | | |
| 2 | IO_L51N_2 | | V4 | | |
| 2 | IO_L51P_2 | | V5 | | |
| 2 | IO_L52N_2/VREF_2 | | V1 | | |
| 2 | IO_L52P_2 | | V2 | | |
| 2 | IO_L53N_2 | | W9 | | |
| 2 | IO_L53P_2 | | W10 | | |
| 2 | IO_L54N_2 | | W7 | | |
| 2 | IO_L54P_2 | | W8 | | |
| 2 | IO_L55N_2 | | W5 | | |
| 2 | IO_L55P_2 | | W6 | | |
| 2 | IO_L56N_2 | | W11 | | |
| 2 | IO_L56P_2 | | W12 | | |
| 2 | IO_L57N_2 | | W3 | | |
| 2 | IO_L57P_2 | | W4 | | |
| 2 | IO_L58N_2/VREF_2 | | W1 | | |
| 2 | IO_L58P_2 | | W2 | | |
| 2 | IO_L59N_2 | | Y9 | | |
| 2 | IO_L59P_2 | | Y10 | | |
| 2 | IO_L60N_2 | | Y6 | | |
| 2 | IO_L60P_2 | | Y7 | | |
| 2 | IO_L85N_2 | | Y3 | | |
| 2 | IO_L85P_2 | | Y4 | | |
| 2 | IO_L86N_2 | | Y11 | | |

*Table 13:* **FF1704 — XC2VP70, XC2VPX70, and XC2VP100**

| Bank | Pin Description | | Pin Number | No Connects | |
|---|---|---|---|---|---|
| | Virtex-II Pro Devices | XC2VPX70 (if Different) | | XC2VP70, XC2VPX70 | XC2VP100 |
| 2 | IO_L86P_2 | | Y12 | | |
| 2 | IO_L87N_2 | | AA9 | | |
| 2 | IO_L87P_2 | | AA10 | | |
| 2 | IO_L88N_2/VREF_2 | | AA6 | | |
| 2 | IO_L88P_2 | | AA7 | | |
| 2 | IO_L89N_2 | | AA12 | | |
| 2 | IO_L89P_2 | | AB12 | | |
| 2 | IO_L90N_2 | | AA3 | | |
| 2 | IO_L90P_2 | | AA4 | | |
| | | | | | |
| 3 | IO_L90N_3 | | AB3 | | |
| 3 | IO_L90P_3 | | AB4 | | |
| 3 | IO_L89N_3 | | AB6 | | |
| 3 | IO_L89P_3 | | AB7 | | |
| 3 | IO_L88N_3 | | AB9 | | |
| 3 | IO_L88P_3 | | AB10 | | |
| 3 | IO_L87N_3/VREF_3 | | AC3 | | |
| 3 | IO_L87P_3 | | AC4 | | |
| 3 | IO_L86N_3 | | AC11 | | |
| 3 | IO_L86P_3 | | AC12 | | |
| 3 | IO_L85N_3 | | AC6 | | |
| 3 | IO_L85P_3 | | AC7 | | |
| 3 | IO_L60N_3 | | AC9 | | |
| 3 | IO_L60P_3 | | AC10 | | |
| 3 | IO_L59N_3 | | AD9 | | |
| 3 | IO_L59P_3 | | AD10 | | |
| 3 | IO_L58N_3 | | AD1 | | |
| 3 | IO_L58P_3 | | AD2 | | |
| 3 | IO_L57N_3/VREF_3 | | AD3 | | |
| 3 | IO_L57P_3 | | AD4 | | |
| 3 | IO_L56N_3 | | AD11 | | |
| 3 | IO_L56P_3 | | AD12 | | |
| 3 | IO_L55N_3 | | AD5 | | |
| 3 | IO_L55P_3 | | AD6 | | |
| 3 | IO_L54N_3 | | AD7 | | |
| 3 | IO_L54P_3 | | AD8 | | |

*Table 13:* **FF1704 — XC2VP70, XC2VPX70, and XC2VP100**

| Bank | Pin Description | | Pin Number | No Connects | |
|---|---|---|---|---|---|
| | Virtex-II Pro Devices | XC2VPX70 (if Different) | | XC2VP70, XC2VPX70 | XC2VP100 |
| 3 | IO_L53N_3 | | AE10 | | |
| 3 | IO_L53P_3 | | AE11 | | |
| 3 | IO_L52N_3 | | AE1 | | |
| 3 | IO_L52P_3 | | AE2 | | |
| 3 | IO_L51N_3/VREF_3 | | AE4 | | |
| 3 | IO_L51P_3 | | AE5 | | |
| 3 | IO_L50N_3 | | AF11 | | |
| 3 | IO_L50P_3 | | AE12 | | |
| 3 | IO_L49N_3 | | AE7 | | |
| 3 | IO_L49P_3 | | AE8 | | |
| 3 | IO_L48N_3 | | AF1 | | |
| 3 | IO_L48P_3 | | AF2 | | |
| 3 | IO_L47N_3 | | AG12 | | |
| 3 | IO_L47P_3 | | AF12 | | |
| 3 | IO_L46N_3 | | AF3 | | |
| 3 | IO_L46P_3 | | AF4 | | |
| 3 | IO_L45N_3/VREF_3 | | AF5 | | |
| 3 | IO_L45P_3 | | AF6 | | |
| 3 | IO_L44N_3 | | AF7 | | |
| 3 | IO_L44P_3 | | AF8 | | |
| 3 | IO_L43N_3 | | AF9 | | |
| 3 | IO_L43P_3 | | AF10 | | |
| 3 | IO_L42N_3 | | AG2 | | |
| 3 | IO_L42P_3 | | AG3 | | |
| 3 | IO_L41N_3 | | AG10 | | |
| 3 | IO_L41P_3 | | AG11 | | |
| 3 | IO_L40N_3 | | AG4 | | |
| 3 | IO_L40P_3 | | AG5 | | |
| 3 | IO_L39N_3/VREF_3 | | AG6 | | |
| 3 | IO_L39P_3 | | AG7 | | |
| 3 | IO_L38N_3 | | AG8 | | |
| 3 | IO_L38P_3 | | AH8 | | |
| 3 | IO_L37N_3 | | AH1 | | |
| 3 | IO_L37P_3 | | AH2 | | |
| 3 | IO_L36N_3 | | AH3 | | |
| 3 | IO_L36P_3 | | AJ3 | | |

*Table 13:* **FF1704 — XC2VP70, XC2VPX70, and XC2VP100**

| Bank | Pin Description | | Pin Number | No Connects | |
|---|---|---|---|---|---|
| | Virtex-II Pro Devices | XC2VPX70 (if Different) | | XC2VP70, XC2VPX70 | XC2VP100 |
| 3 | IO_L35N_3 | | AH11 | | |
| 3 | IO_L35P_3 | | AH12 | | |
| 3 | IO_L34N_3 | | AH5 | | |
| 3 | IO_L34P_3 | | AH6 | | |
| 3 | IO_L33N_3/VREF_3 | | AH9 | | |
| 3 | IO_L33P_3 | | AH10 | | |
| 3 | IO_L32N_3 | | AJ11 | | |
| 3 | IO_L32P_3 | | AJ12 | | |
| 3 | IO_L31N_3 | | AJ1 | | |
| 3 | IO_L31P_3 | | AJ2 | | |
| 3 | IO_L30N_3 | | AJ5 | | |
| 3 | IO_L30P_3 | | AJ6 | | |
| 3 | IO_L29N_3 | | AJ9 | | |
| 3 | IO_L29P_3 | | AJ10 | | |
| 3 | IO_L28N_3 | | AJ7 | | |
| 3 | IO_L28P_3 | | AJ8 | | |
| 3 | IO_L27N_3/VREF_3 | | AK1 | | |
| 3 | IO_L27P_3 | | AK2 | | |
| 3 | IO_L26N_3 | | AK11 | | |
| 3 | IO_L26P_3 | | AK12 | | |
| 3 | IO_L25N_3 | | AK3 | | |
| 3 | IO_L25P_3 | | AK4 | | |
| 3 | IO_L24N_3 | | AK5 | | |
| 3 | IO_L24P_3 | | AK6 | | |
| 3 | IO_L23N_3 | | AK9 | | |
| 3 | IO_L23P_3 | | AK10 | | |
| 3 | IO_L22N_3 | | AK7 | | |
| 3 | IO_L22P_3 | | AK8 | | |
| 3 | IO_L21N_3/VREF_3 | | AL2 | | |
| 3 | IO_L21P_3 | | AL3 | | |
| 3 | IO_L20N_3 | | AL11 | | |
| 3 | IO_L20P_3 | | AL12 | | |
| 3 | IO_L19N_3 | | AL4 | | |
| 3 | IO_L19P_3 | | AL5 | | |
| 3 | IO_L18N_3 | | AL7 | | |
| 3 | IO_L18P_3 | | AL8 | | |

*Table 13:* **FF1704 — XC2VP70, XC2VPX70, and XC2VP100**

| Bank | Pin Description | | Pin Number | No Connects | |
|---|---|---|---|---|---|
| | Virtex-II Pro Devices | XC2VPX70 (if Different) | | XC2VP70, XC2VPX70 | XC2VP100 |
| 3 | IO_L17N_3 | | AL9 | | |
| 3 | IO_L17P_3 | | AL10 | | |
| 3 | IO_L16N_3 | | AM1 | | |
| 3 | IO_L16P_3 | | AM2 | | |
| 3 | IO_L15N_3/VREF_3 | | AM3 | | |
| 3 | IO_L15P_3 | | AN3 | | |
| 3 | IO_L14N_3 | | AM8 | | |
| 3 | IO_L14P_3 | | AM9 | | |
| 3 | IO_L13N_3 | | AM4 | | |
| 3 | IO_L13P_3 | | AM5 | | |
| 3 | IO_L12N_3 | | AM6 | | |
| 3 | IO_L12P_3 | | AM7 | | |
| 3 | IO_L11N_3 | | AN9 | | |
| 3 | IO_L11P_3 | | AM10 | | |
| 3 | IO_L10N_3 | | AN1 | | |
| 3 | IO_L10P_3 | | AN2 | | |
| 3 | IO_L09N_3/VREF_3 | | AN5 | | |
| 3 | IO_L09P_3 | | AN6 | | |
| 3 | IO_L08N_3 | | AN7 | | |
| 3 | IO_L08P_3 | | AN8 | | |
| 3 | IO_L07N_3 | | AP1 | | |
| 3 | IO_L07P_3 | | AP2 | | |
| 3 | IO_L84N_3 | | AP4 | | |
| 3 | IO_L84P_3 | | AP5 | | |
| 3 | IO_L83N_3 | | AR7 | | |
| 3 | IO_L83P_3 | | AP8 | | |
| 3 | IO_L82N_3 | | AP6 | | |
| 3 | IO_L82P_3 | | AP7 | | |
| 3 | IO_L81N_3/VREF_3 | | AR2 | | |
| 3 | IO_L81P_3 | | AR3 | | |
| 3 | IO_L80N_3 | | AT5 | | |
| 3 | IO_L80P_3 | | AR6 | | |
| 3 | IO_L79N_3 | | AR4 | | |
| 3 | IO_L79P_3 | | AR5 | | |
| 3 | IO_L78N_3 | | AT1 | | |
| 3 | IO_L78P_3 | | AT2 | | |

*Table 13:* **FF1704 — XC2VP70, XC2VPX70, and XC2VP100**

| Bank | Pin Description | | Pin Number | No Connects | |
|---|---|---|---|---|---|
| | Virtex-II Pro Devices | XC2VPX70 (if Different) | | XC2VP70, XC2VPX70 | XC2VP100 |
| 3 | IO_L77N_3 | | AT3 | | |
| 3 | IO_L77P_3 | | AT4 | | |
| 3 | IO_L76N_3 | | AU1 | | |
| 3 | IO_L76P_3 | | AU2 | | |
| 3 | IO_L75N_3/VREF_3 | | AU3 | | |
| 3 | IO_L75P_3 | | AU4 | | |
| 3 | IO_L74N_3 | | AV3 | | |
| 3 | IO_L74P_3 | | AW3 | | |
| 3 | IO_L73N_3 | | AV1 | | |
| 3 | IO_L73P_3 | | AV2 | | |
| 3 | IO_L06N_3 | | AW1 | | |
| 3 | IO_L06P_3 | | AW2 | | |
| 3 | IO_L05N_3 | | AT8 | | |
| 3 | IO_L05P_3 | | AU8 | | |
| 3 | IO_L04N_3 | | AT6 | | |
| 3 | IO_L04P_3 | | AU7 | | |
| 3 | IO_L03N_3/VREF_3 | | AY5 | | |
| 3 | IO_L03P_3 | | AY6 | | |
| 3 | IO_L02N_3 | | AV7 | | |
| 3 | IO_L02P_3 | | AW7 | | |
| 3 | IO_L01N_3/VRP_3 | | AV6 | | |
| 3 | IO_L01P_3/VRN_3 | | AW6 | | |
| | | | | | |
| 4 | IO_L01N_4/BUSY/DOUT(1) | | AT9 | | |
| 4 | IO_L01P_4/INIT_B | | AR9 | | |
| 4 | IO_L02N_4/D0/DIN(1) | | AU9 | | |
| 4 | IO_L02P_4/D1 | | AV9 | | |
| 4 | IO_L03N_4/D2 | | AY9 | | |
| 4 | IO_L03P_4/D3 | | AW9 | | |
| 4 | IO_L05_4/No_Pair | | AN11 | | |
| 4 | IO_L06N_4/VRP_4 | | AR10 | | |
| 4 | IO_L06P_4/VRN_4 | | AP10 | | |
| 4 | IO_L07N_4 | | AU10 | | |
| 4 | IO_L07P_4/VREF_4 | | AT10 | | |
| 4 | IO_L08N_4 | | AV10 | | |
| 4 | IO_L08P_4 | | AW10 | | |

*Table 13:* **FF1704 — XC2VP70, XC2VPX70, and XC2VP100**

| Bank | Pin Description | | Pin Number | No Connects | |
|---|---|---|---|---|---|
| | Virtex-II Pro Devices | XC2VPX70 (if Different) | | XC2VP70, XC2VPX70 | XC2VP100 |
| 4 | IO_L09N_4 | | AR11 | | |
| 4 | IO_L09P_4/VREF_4 | | AP11 | | |
| 4 | IO_L19N_4 | | AV11 | | |
| 4 | IO_L19P_4 | | AU11 | | |
| 4 | IO_L20N_4 | | AY10 | | |
| 4 | IO_L20P_4 | | AY11 | | |
| 4 | IO_L21N_4 | | AN12 | | |
| 4 | IO_L21P_4 | | AM12 | | |
| 4 | IO_L25N_4 | | AR12 | | |
| 4 | IO_L25P_4 | | AP12 | | |
| 4 | IO_L26N_4 | | AT12 | | |
| 4 | IO_L26P_4 | | AU12 | | |
| 4 | IO_L27N_4 | | AW12 | | |
| 4 | IO_L27P_4/VREF_4 | | AV12 | | |
| 4 | IO_L28N_4 | | AM13 | | |
| 4 | IO_L28P_4 | | AL13 | | |
| 4 | IO_L29N_4 | | AP13 | | |
| 4 | IO_L29P_4 | | AN13 | | |
| 4 | IO_L30N_4 | | AT13 | | |
| 4 | IO_L30P_4 | | AR13 | | |
| 4 | IO_L34N_4 | | AV13 | | |
| 4 | IO_L34P_4 | | AU13 | | |
| 4 | IO_L35N_4 | | AW13 | | |
| 4 | IO_L35P_4 | | AY13 | | |
| 4 | IO_L36N_4 | | AL15 | | |
| 4 | IO_L36P_4/VREF_4 | | AL14 | | |
| 4 | IO_L78N_4 | | AN14 | NC | |
| 4 | IO_L78P_4 | | AM14 | NC | |
| 4 | IO_L83_4/No_Pair | | AR14 | NC | |
| 4 | IO_L84N_4 | | AU14 | NC | |
| 4 | IO_L84P_4 | | AT14 | NC | |
| 4 | IO_L85N_4 | | AW14 | NC | |
| 4 | IO_L85P_4 | | AV14 | NC | |
| 4 | IO_L86N_4 | | AM15 | NC | |
| 4 | IO_L86P_4 | | AN15 | NC | |
| 4 | IO_L87N_4 | | AR15 | NC | |

*Table 13:* **FF1704 — XC2VP70, XC2VPX70, and XC2VP100**

| Bank | Pin Description | | Pin Number | No Connects | |
|---|---|---|---|---|---|
| | Virtex-II Pro Devices | XC2VPX70 (if Different) | | XC2VP70, XC2VPX70 | XC2VP100 |
| 4 | IO_L87P_4/VREF_4 | | AP15 | NC | |
| 4 | IO_L37N_4 | | AV15 | | |
| 4 | IO_L37P_4 | | AU15 | | |
| 4 | IO_L38N_4 | | AY14 | | |
| 4 | IO_L38P_4 | | AY15 | | |
| 4 | IO_L39N_4 | | AM16 | | |
| 4 | IO_L39P_4 | | AL16 | | |
| 4 | IO_L43N_4 | | AP16 | | |
| 4 | IO_L43P_4 | | AN16 | | |
| 4 | IO_L44N_4 | | AR16 | | |
| 4 | IO_L44P_4 | | AT16 | | |
| 4 | IO_L45N_4 | | AV16 | | |
| 4 | IO_L45P_4/VREF_4 | | AU16 | | |
| 4 | IO_L46N_4 | | AL18 | | |
| 4 | IO_L46P_4 | | AL17 | | |
| 4 | IO_L47N_4 | | AM17 | | |
| 4 | IO_L47P_4 | | AN17 | | |
| 4 | IO_L48N_4 | | AR17 | | |
| 4 | IO_L48P_4 | | AP17 | | |
| 4 | IO_L49N_4 | | AU17 | | |
| 4 | IO_L49P_4 | | AT17 | | |
| 4 | IO_L50_4/No_Pair | | AW16 | | |
| 4 | IO_L53_4/No_Pair | | AW17 | | |
| 4 | IO_L54N_4 | | AN18 | | |
| 4 | IO_L54P_4 | | AM18 | | |
| 4 | IO_L55N_4 | | AT18 | | |
| 4 | IO_L55P_4 | | AR18 | | |
| 4 | IO_L56N_4 | | AV17 | | |
| 4 | IO_L56P_4 | | AV18 | | |
| 4 | IO_L57N_4 | | AY18 | | |
| 4 | IO_L57P_4/VREF_4 | | AY17 | | |
| 4 | IO_L58N_4 | | AM19 | | |
| 4 | IO_L58P_4 | | AL19 | | |
| 4 | IO_L59N_4 | | AP19 | | |
| 4 | IO_L59P_4 | | AN19 | | |
| 4 | IO_L60N_4 | | AT19 | | |

*Table 13:* **FF1704 — XC2VP70, XC2VPX70, and XC2VP100**

| Bank | Pin Description | | Pin Number | No Connects | |
|---|---|---|---|---|---|
| | Virtex-II Pro Devices | XC2VPX70 (if Different) | | XC2VP70, XC2VPX70 | XC2VP100 |
| 4 | IO_L60P_4 | | AR19 | | |
| 4 | IO_L64N_4 | | AV19 | | |
| 4 | IO_L64P_4 | | AU19 | | |
| 4 | IO_L65N_4 | | AW19 | | |
| 4 | IO_L65P_4 | | AY19 | | |
| 4 | IO_L66N_4 | | AL21 | | |
| 4 | IO_L66P_4/VREF_4 | | AL20 | | |
| 4 | IO_L67N_4 | | AN20 | | |
| 4 | IO_L67P_4 | | AM20 | | |
| 4 | IO_L68N_4 | | AP20 | | |
| 4 | IO_L68P_4 | | AR20 | | |
| 4 | IO_L69N_4 | | AV20 | | |
| 4 | IO_L69P_4/VREF_4 | | AU20 | | |
| 4 | IO_L73N_4 | | AY20 | | |
| 4 | IO_L73P_4 | | AW20 | | |
| 4 | IO_L74N_4/GCLK3S | | AN21 | | |
| 4 | IO_L74P_4/GCLK2P | | AP21 | | |
| 4 | IO_L75N_4/GCLK1S | | AU21 | | |
| 4 | IO_L75P_4/GCLK0P | | AT21 | | |
| | | | | | |
| 5 | IO_L75N_5/GCLK7S | BREFCLKN | AT22 | | |
| 5 | IO_L75P_5/GCLK6P | BREFCLKP | AU22 | | |
| 5 | IO_L74N_5/GCLK5S | | AP22 | | |
| 5 | IO_L74P_5/GCLK4P | | AN22 | | |
| 5 | IO_L73N_5 | | AW23 | | |
| 5 | IO_L73P_5 | | AY23 | | |
| 5 | IO_L69N_5/VREF_5 | | AU23 | | |
| 5 | IO_L69P_5 | | AV23 | | |
| 5 | IO_L68N_5 | | AR23 | | |
| 5 | IO_L68P_5 | | AP23 | | |
| 5 | IO_L67N_5 | | AM23 | | |
| 5 | IO_L67P_5 | | AN23 | | |
| 5 | IO_L66N_5/VREF_5 | | AL23 | | |
| 5 | IO_L66P_5 | | AL22 | | |
| 5 | IO_L65N_5 | | AY24 | | |
| 5 | IO_L65P_5 | | AW24 | | |

*Table 13:* **FF1704 — XC2VP70, XC2VPX70, and XC2VP100**

| Bank | Pin Description | | Pin Number | No Connects | |
|---|---|---|---|---|---|
| | Virtex-II Pro Devices | XC2VPX70 (if Different) | | XC2VP70, XC2VPX70 | XC2VP100 |
| 5 | IO_L64N_5 | | AU24 | | |
| 5 | IO_L64P_5 | | AV24 | | |
| 5 | IO_L60N_5 | | AR24 | | |
| 5 | IO_L60P_5 | | AT24 | | |
| 5 | IO_L59N_5 | | AN24 | | |
| 5 | IO_L59P_5 | | AP24 | | |
| 5 | IO_L58N_5 | | AL24 | | |
| 5 | IO_L58P_5 | | AM24 | | |
| 5 | IO_L57N_5/VREF_5 | | AY26 | | |
| 5 | IO_L57P_5 | | AY25 | | |
| 5 | IO_L56N_5 | | AV25 | | |
| 5 | IO_L56P_5 | | AV26 | | |
| 5 | IO_L55N_5 | | AR25 | | |
| 5 | IO_L55P_5 | | AT25 | | |
| 5 | IO_L54N_5 | | AM25 | | |
| 5 | IO_L54P_5 | | AN25 | | |
| 5 | IO_L53_5/No_Pair | | AW26 | | |
| 5 | IO_L50_5/No_Pair | | AW27 | | |
| 5 | IO_L49N_5 | | AT26 | | |
| 5 | IO_L49P_5 | | AU26 | | |
| 5 | IO_L48N_5 | | AP26 | | |
| 5 | IO_L48P_5 | | AR26 | | |
| 5 | IO_L47N_5 | | AN26 | | |
| 5 | IO_L47P_5 | | AM26 | | |
| 5 | IO_L46N_5 | | AL26 | | |
| 5 | IO_L46P_5 | | AL25 | | |
| 5 | IO_L45N_5/VREF_5 | | AU27 | | |
| 5 | IO_L45P_5 | | AV27 | | |
| 5 | IO_L44N_5 | | AT27 | | |
| 5 | IO_L44P_5 | | AR27 | | |
| 5 | IO_L43N_5 | | AN27 | | |
| 5 | IO_L43P_5 | | AP27 | | |
| 5 | IO_L39N_5 | | AL27 | | |
| 5 | IO_L39P_5 | | AM27 | | |
| 5 | IO_L38N_5 | | AY28 | | |
| 5 | IO_L38P_5 | | AY29 | | |

*Table 13:* **FF1704 — XC2VP70, XC2VPX70, and XC2VP100**

| Bank | Pin Description | | Pin Number | No Connects | |
|---|---|---|---|---|---|
| | Virtex-II Pro Devices | XC2VPX70 (if Different) | | XC2VP70, XC2VPX70 | XC2VP100 |
| 5 | IO_L37N_5 | | AU28 | | |
| 5 | IO_L37P_5 | | AV28 | | |
| 5 | IO_L87N_5/VREF_5 | | AP28 | NC | |
| 5 | IO_L87P_5 | | AR28 | NC | |
| 5 | IO_L86N_5 | | AN28 | NC | |
| 5 | IO_L86P_5 | | AM28 | NC | |
| 5 | IO_L85N_5 | | AV29 | NC | |
| 5 | IO_L85P_5 | | AW29 | NC | |
| 5 | IO_L84N_5 | | AT29 | NC | |
| 5 | IO_L84P_5 | | AU29 | NC | |
| 5 | IO_L83_5/No_Pair | | AR29 | NC | |
| 5 | IO_L78N_5 | | AM29 | NC | |
| 5 | IO_L78P_5 | | AN29 | NC | |
| 5 | IO_L36N_5/VREF_5 | | AL29 | | |
| 5 | IO_L36P_5 | | AL28 | | |
| 5 | IO_L35N_5 | | AY30 | | |
| 5 | IO_L35P_5 | | AW30 | | |
| 5 | IO_L34N_5 | | AU30 | | |
| 5 | IO_L34P_5 | | AV30 | | |
| 5 | IO_L30N_5 | | AR30 | | |
| 5 | IO_L30P_5 | | AT30 | | |
| 5 | IO_L29N_5 | | AN30 | | |
| 5 | IO_L29P_5 | | AP30 | | |
| 5 | IO_L28N_5 | | AL30 | | |
| 5 | IO_L28P_5 | | AM30 | | |
| 5 | IO_L27N_5/VREF_5 | | AV31 | | |
| 5 | IO_L27P_5 | | AW31 | | |
| 5 | IO_L26N_5 | | AU31 | | |
| 5 | IO_L26P_5 | | AT31 | | |
| 5 | IO_L25N_5 | | AP31 | | |
| 5 | IO_L25P_5 | | AR31 | | |
| 5 | IO_L21N_5 | | AM31 | | |
| 5 | IO_L21P_5 | | AN31 | | |
| 5 | IO_L20N_5 | | AY32 | | |
| 5 | IO_L20P_5 | | AY33 | | |
| 5 | IO_L19N_5 | | AU32 | | |

*Table 13:* **FF1704 — XC2VP70, XC2VPX70, and XC2VP100**

| Bank | Pin Description | | Pin Number | No Connects | |
|---|---|---|---|---|---|
| | Virtex-II Pro Devices | XC2VPX70 (if Different) | | XC2VP70, XC2VPX70 | XC2VP100 |
| 5 | IO_L19P_5 | | AV32 | | |
| 5 | IO_L09N_5/VREF_5 | | AP32 | | |
| 5 | IO_L09P_5 | | AR32 | | |
| 5 | IO_L08N_5 | | AW33 | | |
| 5 | IO_L08P_5 | | AV33 | | |
| 5 | IO_L07N_5/VREF_5 | | AT33 | | |
| 5 | IO_L07P_5 | | AU33 | | |
| 5 | IO_L06N_5/VRP_5 | | AP33 | | |
| 5 | IO_L06P_5/VRN_5 | | AR33 | | |
| 5 | IO_L05_5/No_Pair | | AN32 | | |
| 5 | IO_L03N_5/D4 | | AW34 | | |
| 5 | IO_L03P_5/D5 | | AY34 | | |
| 5 | IO_L02N_5/D6 | | AV34 | | |
| 5 | IO_L02P_5/D7 | | AU34 | | |
| 5 | IO_L01N_5/RDWR_B | | AR34 | | |
| 5 | IO_L01P_5/CS_B | | AT34 | | |
| | | | | | |
| 6 | IO_L01P_6/VRN_6 | | AW37 | | |
| 6 | IO_L01N_6/VRP_6 | | AV37 | | |
| 6 | IO_L02P_6 | | AW36 | | |
| 6 | IO_L02N_6 | | AV36 | | |
| 6 | IO_L03P_6 | | AY37 | | |
| 6 | IO_L03N_6/VREF_6 | | AY38 | | |
| 6 | IO_L04P_6 | | AU36 | | |
| 6 | IO_L04N_6 | | AT37 | | |
| 6 | IO_L05P_6 | | AU35 | | |
| 6 | IO_L05N_6 | | AT35 | | |
| 6 | IO_L06P_6 | | AW41 | | |
| 6 | IO_L06N_6 | | AW42 | | |
| 6 | IO_L73P_6 | | AV41 | | |
| 6 | IO_L73N_6 | | AV42 | | |
| 6 | IO_L74P_6 | | AW40 | | |
| 6 | IO_L74N_6 | | AV40 | | |
| 6 | IO_L75P_6 | | AU39 | | |
| 6 | IO_L75N_6/VREF_6 | | AU40 | | |
| 6 | IO_L76P_6 | | AU41 | | |

*Table 13:* **FF1704 — XC2VP70, XC2VPX70, and XC2VP100**

| Bank | Pin Description | | Pin Number | No Connects | |
|---|---|---|---|---|---|
| | Virtex-II Pro Devices | XC2VPX70 (if Different) | | XC2VP70, XC2VPX70 | XC2VP100 |
| 6 | IO_L76N_6 | | AU42 | | |
| 6 | IO_L77P_6 | | AT39 | | |
| 6 | IO_L77N_6 | | AT40 | | |
| 6 | IO_L78P_6 | | AT41 | | |
| 6 | IO_L78N_6 | | AT42 | | |
| 6 | IO_L79P_6 | | AR38 | | |
| 6 | IO_L79N_6 | | AR39 | | |
| 6 | IO_L80P_6 | | AR37 | | |
| 6 | IO_L80N_6 | | AT38 | | |
| 6 | IO_L81P_6 | | AR40 | | |
| 6 | IO_L81N_6/VREF_6 | | AR41 | | |
| 6 | IO_L82P_6 | | AP36 | | |
| 6 | IO_L82N_6 | | AP37 | | |
| 6 | IO_L83P_6 | | AP35 | | |
| 6 | IO_L83N_6 | | AR36 | | |
| 6 | IO_L84P_6 | | AP38 | | |
| 6 | IO_L84N_6 | | AP39 | | |
| 6 | IO_L07P_6 | | AP41 | | |
| 6 | IO_L07N_6 | | AP42 | | |
| 6 | IO_L08P_6 | | AN35 | | |
| 6 | IO_L08N_6 | | AN36 | | |
| 6 | IO_L09P_6 | | AN37 | | |
| 6 | IO_L09N_6/VREF_6 | | AN38 | | |
| 6 | IO_L10P_6 | | AN41 | | |
| 6 | IO_L10N_6 | | AN42 | | |
| 6 | IO_L11P_6 | | AM33 | | |
| 6 | IO_L11N_6 | | AN34 | | |
| 6 | IO_L12P_6 | | AM36 | | |
| 6 | IO_L12N_6 | | AM37 | | |
| 6 | IO_L13P_6 | | AM38 | | |
| 6 | IO_L13N_6 | | AM39 | | |
| 6 | IO_L14P_6 | | AM34 | | |
| 6 | IO_L14N_6 | | AM35 | | |
| 6 | IO_L15P_6 | | AN40 | | |
| 6 | IO_L15N_6/VREF_6 | | AM40 | | |
| 6 | IO_L16P_6 | | AM41 | | |

*Table 13:* **FF1704 — XC2VP70, XC2VPX70, and XC2VP100**

| Bank | Pin Description | | Pin Number | No Connects | |
|---|---|---|---|---|---|
| | Virtex-II Pro Devices | XC2VPX70 (if Different) | | XC2VP70, XC2VPX70 | XC2VP100 |
| 6 | IO_L16N_6 | | AM42 | | |
| 6 | IO_L17P_6 | | AL33 | | |
| 6 | IO_L17N_6 | | AL34 | | |
| 6 | IO_L18P_6 | | AL35 | | |
| 6 | IO_L18N_6 | | AL36 | | |
| 6 | IO_L19P_6 | | AL38 | | |
| 6 | IO_L19N_6 | | AL39 | | |
| 6 | IO_L20P_6 | | AL31 | | |
| 6 | IO_L20N_6 | | AL32 | | |
| 6 | IO_L21P_6 | | AL40 | | |
| 6 | IO_L21N_6/VREF_6 | | AL41 | | |
| 6 | IO_L22P_6 | | AK35 | | |
| 6 | IO_L22N_6 | | AK36 | | |
| 6 | IO_L23P_6 | | AK33 | | |
| 6 | IO_L23N_6 | | AK34 | | |
| 6 | IO_L24P_6 | | AK37 | | |
| 6 | IO_L24N_6 | | AK38 | | |
| 6 | IO_L25P_6 | | AK39 | | |
| 6 | IO_L25N_6 | | AK40 | | |
| 6 | IO_L26P_6 | | AK31 | | |
| 6 | IO_L26N_6 | | AK32 | | |
| 6 | IO_L27P_6 | | AK41 | | |
| 6 | IO_L27N_6/VREF_6 | | AK42 | | |
| 6 | IO_L28P_6 | | AJ35 | | |
| 6 | IO_L28N_6 | | AJ36 | | |
| 6 | IO_L29P_6 | | AJ33 | | |
| 6 | IO_L29N_6 | | AJ34 | | |
| 6 | IO_L30P_6 | | AJ37 | | |
| 6 | IO_L30N_6 | | AJ38 | | |
| 6 | IO_L31P_6 | | AJ41 | | |
| 6 | IO_L31N_6 | | AJ42 | | |
| 6 | IO_L32P_6 | | AJ31 | | |
| 6 | IO_L32N_6 | | AJ32 | | |
| 6 | IO_L33P_6 | | AH33 | | |
| 6 | IO_L33N_6/VREF_6 | | AH34 | | |
| 6 | IO_L34P_6 | | AH37 | | |

*Table 13:* **FF1704 — XC2VP70, XC2VPX70, and XC2VP100**

| Bank | Pin Description | | Pin Number | No Connects | |
|---|---|---|---|---|---|
| | Virtex-II Pro Devices | XC2VPX70 (if Different) | | XC2VP70, XC2VPX70 | XC2VP100 |
| 6 | IO_L34N_6 | | AH38 | | |
| 6 | IO_L35P_6 | | AH31 | | |
| 6 | IO_L35N_6 | | AH32 | | |
| 6 | IO_L36P_6 | | AJ40 | | |
| 6 | IO_L36N_6 | | AH40 | | |
| 6 | IO_L37P_6 | | AH41 | | |
| 6 | IO_L37N_6 | | AH42 | | |
| 6 | IO_L38P_6 | | AH35 | | |
| 6 | IO_L38N_6 | | AG35 | | |
| 6 | IO_L39P_6 | | AG36 | | |
| 6 | IO_L39N_6/VREF_6 | | AG37 | | |
| 6 | IO_L40P_6 | | AG38 | | |
| 6 | IO_L40N_6 | | AG39 | | |
| 6 | IO_L41P_6 | | AG32 | | |
| 6 | IO_L41N_6 | | AG33 | | |
| 6 | IO_L42P_6 | | AG40 | | |
| 6 | IO_L42N_6 | | AG41 | | |
| 6 | IO_L43P_6 | | AF33 | | |
| 6 | IO_L43N_6 | | AF34 | | |
| 6 | IO_L44P_6 | | AF35 | | |
| 6 | IO_L44N_6 | | AF36 | | |
| 6 | IO_L45P_6 | | AF37 | | |
| 6 | IO_L45N_6/VREF_6 | | AF38 | | |
| 6 | IO_L46P_6 | | AF39 | | |
| 6 | IO_L46N_6 | | AF40 | | |
| 6 | IO_L47P_6 | | AF31 | | |
| 6 | IO_L47N_6 | | AG31 | | |
| 6 | IO_L48P_6 | | AF41 | | |
| 6 | IO_L48N_6 | | AF42 | | |
| 6 | IO_L49P_6 | | AE35 | | |
| 6 | IO_L49N_6 | | AE36 | | |
| 6 | IO_L50P_6 | | AE31 | | |
| 6 | IO_L50N_6 | | AF32 | | |
| 6 | IO_L51P_6 | | AE38 | | |
| 6 | IO_L51N_6/VREF_6 | | AE39 | | |
| 6 | IO_L52P_6 | | AE41 | | |

*Table 13:* **FF1704 — XC2VP70, XC2VPX70, and XC2VP100**

| Bank | Pin Description | | Pin Number | No Connects | |
|---|---|---|---|---|---|
| | Virtex-II Pro Devices | XC2VPX70 (if Different) | | XC2VP70, XC2VPX70 | XC2VP100 |
| 6 | IO_L52N_6 | | AE42 | | |
| 6 | IO_L53P_6 | | AE32 | | |
| 6 | IO_L53N_6 | | AE33 | | |
| 6 | IO_L54P_6 | | AD35 | | |
| 6 | IO_L54N_6 | | AD36 | | |
| 6 | IO_L55P_6 | | AD37 | | |
| 6 | IO_L55N_6 | | AD38 | | |
| 6 | IO_L56P_6 | | AD31 | | |
| 6 | IO_L56N_6 | | AD32 | | |
| 6 | IO_L57P_6 | | AD39 | | |
| 6 | IO_L57N_6/VREF_6 | | AD40 | | |
| 6 | IO_L58P_6 | | AD41 | | |
| 6 | IO_L58N_6 | | AD42 | | |
| 6 | IO_L59P_6 | | AD33 | | |
| 6 | IO_L59N_6 | | AD34 | | |
| 6 | IO_L60P_6 | | AC33 | | |
| 6 | IO_L60N_6 | | AC34 | | |
| 6 | IO_L85P_6 | | AC36 | | |
| 6 | IO_L85N_6 | | AC37 | | |
| 6 | IO_L86P_6 | | AC31 | | |
| 6 | IO_L86N_6 | | AC32 | | |
| 6 | IO_L87P_6 | | AC39 | | |
| 6 | IO_L87N_6/VREF_6 | | AC40 | | |
| 6 | IO_L88P_6 | | AB33 | | |
| 6 | IO_L88N_6 | | AB34 | | |
| 6 | IO_L89P_6 | | AB36 | | |
| 6 | IO_L89N_6 | | AB37 | | |
| 6 | IO_L90P_6 | | AB39 | | |
| 6 | IO_L90N_6 | | AB40 | | |
| | | | | | |
| 7 | IO_L90P_7 | | AA39 | | |
| 7 | IO_L90N_7 | | AA40 | | |
| 7 | IO_L89P_7 | | AB31 | | |
| 7 | IO_L89N_7 | | AA31 | | |
| 7 | IO_L88P_7 | | AA36 | | |
| 7 | IO_L88N_7/VREF_7 | | AA37 | | |

*Table 13:* **FF1704 — XC2VP70, XC2VPX70, and XC2VP100**

| Bank | Pin Description | | Pin Number | No Connects | |
|---|---|---|---|---|---|
| | Virtex-II Pro Devices | XC2VPX70 (if Different) | | XC2VP70, XC2VPX70 | XC2VP100 |
| 7 | IO_L87P_7 | | AA33 | | |
| 7 | IO_L87N_7 | | AA34 | | |
| 7 | IO_L86P_7 | | Y31 | | |
| 7 | IO_L86N_7 | | Y32 | | |
| 7 | IO_L85P_7 | | Y39 | | |
| 7 | IO_L85N_7 | | Y40 | | |
| 7 | IO_L60P_7 | | Y36 | | |
| 7 | IO_L60N_7 | | Y37 | | |
| 7 | IO_L59P_7 | | Y33 | | |
| 7 | IO_L59N_7 | | Y34 | | |
| 7 | IO_L58P_7 | | W41 | | |
| 7 | IO_L58N_7/VREF_7 | | W42 | | |
| 7 | IO_L57P_7 | | W39 | | |
| 7 | IO_L57N_7 | | W40 | | |
| 7 | IO_L56P_7 | | W31 | | |
| 7 | IO_L56N_7 | | W32 | | |
| 7 | IO_L55P_7 | | W37 | | |
| 7 | IO_L55N_7 | | W38 | | |
| 7 | IO_L54P_7 | | W35 | | |
| 7 | IO_L54N_7 | | W36 | | |
| 7 | IO_L53P_7 | | W33 | | |
| 7 | IO_L53N_7 | | W34 | | |
| 7 | IO_L52P_7 | | V41 | | |
| 7 | IO_L52N_7/VREF_7 | | V42 | | |
| 7 | IO_L51P_7 | | V38 | | |
| 7 | IO_L51N_7 | | V39 | | |
| 7 | IO_L50P_7 | | V31 | | |
| 7 | IO_L50N_7 | | U32 | | |
| 7 | IO_L49P_7 | | V35 | | |
| 7 | IO_L49N_7 | | V36 | | |
| 7 | IO_L48P_7 | | V32 | | |
| 7 | IO_L48N_7 | | V33 | | |
| 7 | IO_L47P_7 | | U31 | | |
| 7 | IO_L47N_7 | | T31 | | |
| 7 | IO_L46P_7 | | U41 | | |
| 7 | IO_L46N_7/VREF_7 | | U42 | | |

*Table 13:* **FF1704 — XC2VP70, XC2VPX70, and XC2VP100**

| Bank | Pin Description | | Pin Number | No Connects | |
|---|---|---|---|---|---|
| | Virtex-II Pro Devices | XC2VPX70 (if Different) | | XC2VP70, XC2VPX70 | XC2VP100 |
| 7 | IO_L45P_7 | | U39 | | |
| 7 | IO_L45N_7 | | U40 | | |
| 7 | IO_L44P_7 | | U33 | | |
| 7 | IO_L44N_7 | | U34 | | |
| 7 | IO_L43P_7 | | U37 | | |
| 7 | IO_L43N_7 | | U38 | | |
| 7 | IO_L42P_7 | | U35 | | |
| 7 | IO_L42N_7 | | U36 | | |
| 7 | IO_L41P_7 | | T32 | | |
| 7 | IO_L41N_7 | | T33 | | |
| 7 | IO_L40P_7 | | T40 | | |
| 7 | IO_L40N_7/VREF_7 | | T41 | | |
| 7 | IO_L39P_7 | | T38 | | |
| 7 | IO_L39N_7 | | T39 | | |
| 7 | IO_L38P_7 | | R35 | | |
| 7 | IO_L38N_7 | | T35 | | |
| 7 | IO_L37P_7 | | T36 | | |
| 7 | IO_L37N_7 | | T37 | | |
| 7 | IO_L36P_7 | | R31 | | |
| 7 | IO_L36N_7 | | R32 | | |
| 7 | IO_L35P_7 | | R41 | | |
| 7 | IO_L35N_7 | | R42 | | |
| 7 | IO_L34P_7 | | R40 | | |
| 7 | IO_L34N_7/VREF_7 | | P40 | | |
| 7 | IO_L33P_7 | | R37 | | |
| 7 | IO_L33N_7 | | R38 | | |
| 7 | IO_L32P_7 | | R33 | | |
| 7 | IO_L32N_7 | | R34 | | |
| 7 | IO_L31P_7 | | P41 | | |
| 7 | IO_L31N_7 | | P42 | | |
| 7 | IO_L30P_7 | | P37 | | |
| 7 | IO_L30N_7 | | P38 | | |
| 7 | IO_L29P_7 | | P31 | | |
| 7 | IO_L29N_7 | | P32 | | |
| 7 | IO_L28P_7 | | P35 | | |
| 7 | IO_L28N_7/VREF_7 | | P36 | | |

*Table 13:* **FF1704 — XC2VP70, XC2VPX70, and XC2VP100**

| Bank | Pin Description | | Pin Number | No Connects | |
|---|---|---|---|---|---|
| | Virtex-II Pro Devices | XC2VPX70 (if Different) | | XC2VP70, XC2VPX70 | XC2VP100 |
| 7 | IO_L27P_7 | | P33 | | |
| 7 | IO_L27N_7 | | P34 | | |
| 7 | IO_L26P_7 | | N31 | | |
| 7 | IO_L26N_7 | | N32 | | |
| 7 | IO_L25P_7 | | N41 | | |
| 7 | IO_L25N_7 | | N42 | | |
| 7 | IO_L24P_7 | | N39 | | |
| 7 | IO_L24N_7 | | N40 | | |
| 7 | IO_L23P_7 | | N33 | | |
| 7 | IO_L23N_7 | | N34 | | |
| 7 | IO_L22P_7 | | N37 | | |
| 7 | IO_L22N_7/VREF_7 | | N38 | | |
| 7 | IO_L21P_7 | | N35 | | |
| 7 | IO_L21N_7 | | N36 | | |
| 7 | IO_L20P_7 | | M38 | | |
| 7 | IO_L20N_7 | | M39 | | |
| 7 | IO_L19P_7 | | M40 | | |
| 7 | IO_L19N_7 | | M41 | | |
| 7 | IO_L18P_7 | | M33 | | |
| 7 | IO_L18N_7 | | M34 | | |
| 7 | IO_L17P_7 | | M31 | | |
| 7 | IO_L17N_7 | | M32 | | |
| 7 | IO_L16P_7 | | M35 | | |
| 7 | IO_L16N_7/VREF_7 | | M36 | | |
| 7 | IO_L15P_7 | | L41 | | |
| 7 | IO_L15N_7 | | L42 | | |
| 7 | IO_L14P_7 | | L39 | | |
| 7 | IO_L14N_7 | | L38 | | |
| 7 | IO_L13P_7 | | L40 | | |
| 7 | IO_L13N_7 | | K40 | | |
| 7 | IO_L12P_7 | | L36 | | |
| 7 | IO_L12N_7 | | L37 | | |
| 7 | IO_L11P_7 | | L34 | | |
| 7 | IO_L11N_7 | | L35 | | |
| 7 | IO_L10P_7 | | K42 | | |
| 7 | IO_L10N_7/VREF_7 | | K41 | | |

*Table 13:* **FF1704 — XC2VP70, XC2VPX70, and XC2VP100**

| Bank | Pin Description | | Pin Number | No Connects | |
|---|---|---|---|---|---|
| | Virtex-II Pro Devices | XC2VPX70 (if Different) | | XC2VP70, XC2VPX70 | XC2VP100 |
| 7 | IO_L09P_7 | | K36 | | |
| 7 | IO_L09N_7 | | K35 | | |
| 7 | IO_L08P_7 | | K38 | | |
| 7 | IO_L08N_7 | | K37 | | |
| 7 | IO_L07P_7 | | L33 | | |
| 7 | IO_L07N_7 | | K34 | | |
| 7 | IO_L84P_7 | | J41 | | |
| 7 | IO_L84N_7 | | J42 | | |
| 7 | IO_L83P_7 | | J39 | | |
| 7 | IO_L83N_7 | | J38 | | |
| 7 | IO_L82P_7 | | J36 | | |
| 7 | IO_L82N_7/VREF_7 | | J37 | | |
| 7 | IO_L81P_7 | | J35 | | |
| 7 | IO_L81N_7 | | H36 | | |
| 7 | IO_L80P_7 | | H41 | | |
| 7 | IO_L80N_7 | | H40 | | |
| 7 | IO_L79P_7 | | H38 | | |
| 7 | IO_L79N_7 | | H39 | | |
| 7 | IO_L78P_7 | | H37 | | |
| 7 | IO_L78N_7 | | G38 | | |
| 7 | IO_L77P_7 | | G42 | | |
| 7 | IO_L77N_7 | | G41 | | |
| 7 | IO_L76P_7 | | G39 | | |
| 7 | IO_L76N_7/VREF_7 | | G40 | | |
| 7 | IO_L75P_7 | | F41 | | |
| 7 | IO_L75N_7 | | F42 | | |
| 7 | IO_L74P_7 | | F40 | | |
| 7 | IO_L74N_7 | | F39 | | |
| 7 | IO_L73P_7 | | E41 | | |
| 7 | IO_L73N_7 | | E42 | | |
| 7 | IO_L06P_7 | | D41 | | |
| 7 | IO_L06N_7 | | D42 | | |
| 7 | IO_L05P_7 | | E40 | | |
| 7 | IO_L05N_7 | | D40 | | |
| 7 | IO_L04P_7 | | F36 | | |
| 7 | IO_L04N_7/VREF_7 | | G37 | | |

*Table 13:* **FF1704 — XC2VP70, XC2VPX70, and XC2VP100**

| Bank | Pin Description | | Pin Number | No Connects | |
|---|---|---|---|---|---|
| | Virtex-II Pro Devices | XC2VPX70 (if Different) | | XC2VP70, XC2VPX70 | XC2VP100 |
| 7 | IO_L03P_7 | | D37 | | |
| 7 | IO_L03N_7 | | E37 | | |
| 7 | IO_L02P_7 | | D36 | | |
| 7 | IO_L02N_7 | | E36 | | |
| 7 | IO_L01P_7/VRN_7 | | C37 | | |
| 7 | IO_L01N_7/VRP_7 | | C38 | | |
| | | | | | |
| 0 | VCCO_0 | | D25 | | |
| 0 | VCCO_0 | | G23 | | |
| 0 | VCCO_0 | | G28 | | |
| 0 | VCCO_0 | | G32 | | |
| 0 | VCCO_0 | | J25 | | |
| 0 | VCCO_0 | | J29 | | |
| 0 | VCCO_0 | | P22 | | |
| 0 | VCCO_0 | | P23 | | |
| 0 | VCCO_0 | | P24 | | |
| 0 | VCCO_0 | | P25 | | |
| 0 | VCCO_0 | | P26 | | |
| 0 | VCCO_0 | | R22 | | |
| 0 | VCCO_0 | | R23 | | |
| 0 | VCCO_0 | | R24 | | |
| 0 | VCCO_0 | | R25 | | |
| 1 | VCCO_1 | | R21 | | |
| 1 | VCCO_1 | | R20 | | |
| 1 | VCCO_1 | | R19 | | |
| 1 | VCCO_1 | | R18 | | |
| 1 | VCCO_1 | | P21 | | |
| 1 | VCCO_1 | | P20 | | |
| 1 | VCCO_1 | | P19 | | |
| 1 | VCCO_1 | | P18 | | |
| 1 | VCCO_1 | | P17 | | |
| 1 | VCCO_1 | | J18 | | |
| 1 | VCCO_1 | | J14 | | |
| 1 | VCCO_1 | | G20 | | |
| 1 | VCCO_1 | | G15 | | |
| 1 | VCCO_1 | | G11 | | |

*Table 13:* **FF1704 — XC2VP70, XC2VPX70, and XC2VP100**

| Bank | Pin Description | | Pin Number | No Connects | |
|---|---|---|---|---|---|
| | Virtex-II Pro Devices | XC2VPX70 (if Different) | | XC2VP70, XC2VPX70 | XC2VP100 |
| 1 | VCCO_1 | | D18 | | |
| 2 | VCCO_2 | | AA15 | | |
| 2 | VCCO_2 | | AA14 | | |
| 2 | VCCO_2 | | Y15 | | |
| 2 | VCCO_2 | | Y14 | | |
| 2 | VCCO_2 | | Y8 | | |
| 2 | VCCO_2 | | Y5 | | |
| 2 | VCCO_2 | | W15 | | |
| 2 | VCCO_2 | | W14 | | |
| 2 | VCCO_2 | | V15 | | |
| 2 | VCCO_2 | | V14 | | |
| 2 | VCCO_2 | | V3 | | |
| 2 | VCCO_2 | | U15 | | |
| 2 | VCCO_2 | | U14 | | |
| 2 | VCCO_2 | | T15 | | |
| 2 | VCCO_2 | | T14 | | |
| 2 | VCCO_2 | | R14 | | |
| 2 | VCCO_2 | | T9 | | |
| 2 | VCCO_2 | | P4 | | |
| 2 | VCCO_2 | | M6 | | |
| 2 | VCCO_2 | | J3 | | |
| 2 | VCCO_2 | | F5 | | |
| 3 | VCCO_3 | | AU5 | | |
| 3 | VCCO_3 | | AP3 | | |
| 3 | VCCO_3 | | AL6 | | |
| 3 | VCCO_3 | | AJ4 | | |
| 3 | VCCO_3 | | AH14 | | |
| 3 | VCCO_3 | | AG15 | | |
| 3 | VCCO_3 | | AG14 | | |
| 3 | VCCO_3 | | AG9 | | |
| 3 | VCCO_3 | | AF15 | | |
| 3 | VCCO_3 | | AF14 | | |
| 3 | VCCO_3 | | AE15 | | |
| 3 | VCCO_3 | | AE14 | | |
| 3 | VCCO_3 | | AE3 | | |
| 3 | VCCO_3 | | AD15 | | |

*Table 13:* **FF1704 — XC2VP70, XC2VPX70, and XC2VP100**

| Bank | Pin Description | | Pin Number | No Connects | |
|---|---|---|---|---|---|
| | Virtex-II Pro Devices | XC2VPX70 (if Different) | | XC2VP70, XC2VPX70 | XC2VP100 |
| 3 | VCCO_3 | | AD14 | | |
| 3 | VCCO_3 | | AC15 | | |
| 3 | VCCO_3 | | AC14 | | |
| 3 | VCCO_3 | | AC8 | | |
| 3 | VCCO_3 | | AC5 | | |
| 3 | VCCO_3 | | AB15 | | |
| 3 | VCCO_3 | | AB14 | | |
| 4 | VCCO_4 | | AW18 | | |
| 4 | VCCO_4 | | AT20 | | |
| 4 | VCCO_4 | | AT15 | | |
| 4 | VCCO_4 | | AT11 | | |
| 4 | VCCO_4 | | AP18 | | |
| 4 | VCCO_4 | | AP14 | | |
| 4 | VCCO_4 | | AJ21 | | |
| 4 | VCCO_4 | | AJ20 | | |
| 4 | VCCO_4 | | AJ19 | | |
| 4 | VCCO_4 | | AJ18 | | |
| 4 | VCCO_4 | | AJ17 | | |
| 4 | VCCO_4 | | AH21 | | |
| 4 | VCCO_4 | | AH20 | | |
| 4 | VCCO_4 | | AH19 | | |
| 4 | VCCO_4 | | AH18 | | |
| 5 | VCCO_5 | | AW25 | | |
| 5 | VCCO_5 | | AT32 | | |
| 5 | VCCO_5 | | AT28 | | |
| 5 | VCCO_5 | | AT23 | | |
| 5 | VCCO_5 | | AP29 | | |
| 5 | VCCO_5 | | AP25 | | |
| 5 | VCCO_5 | | AJ26 | | |
| 5 | VCCO_5 | | AJ25 | | |
| 5 | VCCO_5 | | AJ24 | | |
| 5 | VCCO_5 | | AJ23 | | |
| 5 | VCCO_5 | | AJ22 | | |
| 5 | VCCO_5 | | AH25 | | |
| 5 | VCCO_5 | | AH24 | | |
| 5 | VCCO_5 | | AH23 | | |

*Table 13:* **FF1704 — XC2VP70, XC2VPX70, and XC2VP100**

| Bank | Pin Description | | Pin Number | No Connects | |
|---|---|---|---|---|---|
| | Virtex-II Pro Devices | XC2VPX70 (if Different) | | XC2VP70, XC2VPX70 | XC2VP100 |
| 5 | VCCO_5 | | AH22 | | |
| 6 | VCCO_6 | | AU38 | | |
| 6 | VCCO_6 | | AP40 | | |
| 6 | VCCO_6 | | AL37 | | |
| 6 | VCCO_6 | | AJ39 | | |
| 6 | VCCO_6 | | AH29 | | |
| 6 | VCCO_6 | | AG34 | | |
| 6 | VCCO_6 | | AG29 | | |
| 6 | VCCO_6 | | AG28 | | |
| 6 | VCCO_6 | | AF29 | | |
| 6 | VCCO_6 | | AF28 | | |
| 6 | VCCO_6 | | AE40 | | |
| 6 | VCCO_6 | | AE29 | | |
| 6 | VCCO_6 | | AE28 | | |
| 6 | VCCO_6 | | AD29 | | |
| 6 | VCCO_6 | | AD28 | | |
| 6 | VCCO_6 | | AC38 | | |
| 6 | VCCO_6 | | AC35 | | |
| 6 | VCCO_6 | | AC29 | | |
| 6 | VCCO_6 | | AC28 | | |
| 6 | VCCO_6 | | AB29 | | |
| 6 | VCCO_6 | | AB28 | | |
| 7 | VCCO_7 | | AA29 | | |
| 7 | VCCO_7 | | AA28 | | |
| 7 | VCCO_7 | | Y38 | | |
| 7 | VCCO_7 | | Y35 | | |
| 7 | VCCO_7 | | Y29 | | |
| 7 | VCCO_7 | | Y28 | | |
| 7 | VCCO_7 | | W29 | | |
| 7 | VCCO_7 | | W28 | | |
| 7 | VCCO_7 | | V40 | | |
| 7 | VCCO_7 | | V29 | | |
| 7 | VCCO_7 | | V28 | | |
| 7 | VCCO_7 | | U29 | | |
| 7 | VCCO_7 | | U28 | | |
| 7 | VCCO_7 | | T34 | | |

*Table 13:* **FF1704 — XC2VP70, XC2VPX70, and XC2VP100**

| Bank | Pin Description | | Pin Number | No Connects | |
|---|---|---|---|---|---|
| | Virtex-II Pro Devices | XC2VPX70 (if Different) | | XC2VP70, XC2VPX70 | XC2VP100 |
| 7 | VCCO_7 | | T29 | | |
| 7 | VCCO_7 | | T28 | | |
| 7 | VCCO_7 | | R29 | | |
| 7 | VCCO_7 | | P39 | | |
| 7 | VCCO_7 | | M37 | | |
| 7 | VCCO_7 | | J40 | | |
| 7 | VCCO_7 | | F38 | | |
| | | | | | |
| N/A | CCLK | | AY7 | | |
| N/A | PROG_B | | G35 | | |
| N/A | DONE | | AW8 | | |
| N/A | M0 | | AV35 | | |
| N/A | M1 | | AY36 | | |
| N/A | M2 | | AW35 | | |
| N/A | TCK | | G8 | | |
| N/A | TDI | | C36 | | |
| N/A | TDO | | C7 | | |
| N/A | TMS | | F8 | | |
| N/A | PWRDWN_B | | AV8 | | |
| N/A | HSWAP_EN | | F35 | | |
| N/A | RSVD | | D8 | | |
| N/A | VBATT | | E8 | | |
| N/A | DXP | | E35 | | |
| N/A | DXN | | D35 | | |
| N/A | AVCCAUXTX2 | | B40 | | |
| N/A | VTTXPAD2 | | B41 | | |
| N/A | TXNPAD2 | | A41 | | |
| N/A | TXPPAD2 | | A40 | | |
| N/A | GNDA2 | | C39 | | |
| N/A | RXPPAD2 | | A39 | | |
| N/A | RXNPAD2 | | A38 | | |
| N/A | VTRXPAD2 | | B39 | | |
| N/A | AVCCAUXRX2 | | B38 | | |
| N/A | AVCCAUXTX3 | | B36 | | |
| N/A | VTTXPAD3 | | B37 | | |
| N/A | TXNPAD3 | | A37 | | |

*Table 13:* **FF1704 — XC2VP70, XC2VPX70, and XC2VP100**

| Bank | Pin Description | | Pin Number | No Connects | |
|---|---|---|---|---|---|
| | Virtex-II Pro Devices | XC2VPX70 (if Different) | | XC2VP70, XC2VPX70 | XC2VP100 |
| N/A | TXPPAD3 | | A36 | | |
| N/A | GNDA3 | | C35 | | |
| N/A | RXPPAD3 | | A35 | | |
| N/A | RXNPAD3 | | A34 | | |
| N/A | VTRXPAD3 | | B35 | | |
| N/A | AVCCAUXRX3 | | B34 | | |
| N/A | AVCCAUXTX4 | | B32 | | |
| N/A | VTTXPAD4 | | B33 | | |
| N/A | TXNPAD4 | | A33 | | |
| N/A | TXPPAD4 | | A32 | | |
| N/A | GNDA4 | | C31 | | |
| N/A | RXPPAD4 | | A31 | | |
| N/A | RXNPAD4 | | A30 | | |
| N/A | VTRXPAD4 | | B31 | | |
| N/A | AVCCAUXRX4 | | B30 | | |
| N/A | AVCCAUXTX5 | | B28 | | |
| N/A | VTTXPAD5 | | B29 | | |
| N/A | TXNPAD5 | | A29 | | |
| N/A | TXPPAD5 | | A28 | | |
| N/A | GNDA5 | | C27 | | |
| N/A | RXPPAD5 | | A27 | | |
| N/A | RXNPAD5 | | A26 | | |
| N/A | VTRXPAD5 | | B27 | | |
| N/A | AVCCAUXRX5 | | B26 | | |
| N/A | AVCCAUXTX6 | | B24 | | |
| N/A | VTTXPAD6 | | B25 | | |
| N/A | TXNPAD6 | | A25 | | |
| N/A | TXPPAD6 | | A24 | | |
| N/A | GNDA6 | | C22 | | |
| N/A | RXPPAD6 | | A23 | | |
| N/A | RXNPAD6 | | A22 | | |
| N/A | VTRXPAD6 | | B23 | | |
| N/A | AVCCAUXRX6 | | B22 | | |
| N/A | AVCCAUXTX7 | | B20 | | |
| N/A | VTTXPAD7 | | B21 | | |
| N/A | TXNPAD7 | | A21 | | |

*Table 13:* **FF1704 — XC2VP70, XC2VPX70, and XC2VP100**

| Bank | Pin Description | | Pin Number | No Connects | |
|---|---|---|---|---|---|
| | Virtex-II Pro Devices | XC2VPX70 (if Different) | | XC2VP70, XC2VPX70 | XC2VP100 |
| N/A | TXPPAD7 | | A20 | | |
| N/A | GNDA7 | | C21 | | |
| N/A | RXPPAD7 | | A19 | | |
| N/A | RXNPAD7 | | A18 | | |
| N/A | VTRXPAD7 | | B19 | | |
| N/A | AVCCAUXRX7 | | B18 | | |
| N/A | AVCCAUXTX8 | | B16 | | |
| N/A | VTTXPAD8 | | B17 | | |
| N/A | TXNPAD8 | | A17 | | |
| N/A | TXPPAD8 | | A16 | | |
| N/A | GNDA8 | | C16 | | |
| N/A | RXPPAD8 | | A15 | | |
| N/A | RXNPAD8 | | A14 | | |
| N/A | VTRXPAD8 | | B15 | | |
| N/A | AVCCAUXRX8 | | B14 | | |
| N/A | AVCCAUXTX9 | | B12 | | |
| N/A | VTTXPAD9 | | B13 | | |
| N/A | TXNPAD9 | | A13 | | |
| N/A | TXPPAD9 | | A12 | | |
| N/A | GNDA9 | | C12 | | |
| N/A | RXPPAD9 | | A11 | | |
| N/A | RXNPAD9 | | A10 | | |
| N/A | VTRXPAD9 | | B11 | | |
| N/A | AVCCAUXRX9 | | B10 | | |
| N/A | AVCCAUXTX10 | | B8 | | |
| N/A | VTTXPAD10 | | B9 | | |
| N/A | TXNPAD10 | | A9 | | |
| N/A | TXPPAD10 | | A8 | | |
| N/A | GNDA10 | | C8 | | |
| N/A | RXPPAD10 | | A7 | | |
| N/A | RXNPAD10 | | A6 | | |
| N/A | VTRXPAD10 | | B7 | | |
| N/A | AVCCAUXRX10 | | B6 | | |
| N/A | AVCCAUXTX11 | | B4 | | |
| N/A | VTTXPAD11 | | B5 | | |
| N/A | TXNPAD11 | | A5 | | |

*Table 13:* **FF1704 — XC2VP70, XC2VPX70, and XC2VP100**

| Bank | Pin Description | | Pin Number | No Connects | |
|---|---|---|---|---|---|
| | Virtex-II Pro Devices | XC2VPX70 (if Different) | | XC2VP70, XC2VPX70 | XC2VP100 |
| N/A | TXPPAD11 | | A4 | | |
| N/A | GNDA11 | | C4 | | |
| N/A | RXPPAD11 | | A3 | | |
| N/A | RXNPAD11 | | A2 | | |
| N/A | VTRXPAD11 | | B3 | | |
| N/A | AVCCAUXRX11 | | B2 | | |
| N/A | AVCCAUXRX14 | | BA2 | | |
| N/A | VTRXPAD14 | | BA3 | | |
| N/A | RXNPAD14 | | BB2 | | |
| N/A | RXPPAD14 | | BB3 | | |
| N/A | GNDA14 | | AY4 | | |
| N/A | TXPPAD14 | | BB4 | | |
| N/A | TXNPAD14 | | BB5 | | |
| N/A | VTTXPAD14 | | BA5 | | |
| N/A | AVCCAUXTX14 | | BA4 | | |
| N/A | AVCCAUXRX15 | | BA6 | | |
| N/A | VTRXPAD15 | | BA7 | | |
| N/A | RXNPAD15 | | BB6 | | |
| N/A | RXPPAD15 | | BB7 | | |
| N/A | GNDA15 | | AY8 | | |
| N/A | TXPPAD15 | | BB8 | | |
| N/A | TXNPAD15 | | BB9 | | |
| N/A | VTTXPAD15 | | BA9 | | |
| N/A | AVCCAUXTX15 | | BA8 | | |
| N/A | AVCCAUXRX16 | | BA10 | | |
| N/A | VTRXPAD16 | | BA11 | | |
| N/A | RXNPAD16 | | BB10 | | |
| N/A | RXPPAD16 | | BB11 | | |
| N/A | GNDA16 | | AY12 | | |
| N/A | TXPPAD16 | | BB12 | | |
| N/A | TXNPAD16 | | BB13 | | |
| N/A | VTTXPAD16 | | BA13 | | |
| N/A | AVCCAUXTX16 | | BA12 | | |
| N/A | AVCCAUXRX17 | | BA14 | | |
| N/A | VTRXPAD17 | | BA15 | | |
| N/A | RXNPAD17 | | BB14 | | |

*Table 13:* **FF1704 — XC2VP70, XC2VPX70, and XC2VP100**

| Bank | Pin Description | | Pin Number | No Connects | |
|---|---|---|---|---|---|
| | Virtex-II Pro Devices | XC2VPX70 (if Different) | | XC2VP70, XC2VPX70 | XC2VP100 |
| N/A | RXPPAD17 | | BB15 | | |
| N/A | GNDA17 | | AY16 | | |
| N/A | TXPPAD17 | | BB16 | | |
| N/A | TXNPAD17 | | BB17 | | |
| N/A | VTTXPAD17 | | BA17 | | |
| N/A | AVCCAUXTX17 | | BA16 | | |
| N/A | AVCCAUXRX18 | | BA18 | | |
| N/A | VTRXPAD18 | | BA19 | | |
| N/A | RXNPAD18 | | BB18 | | |
| N/A | RXPPAD18 | | BB19 | | |
| N/A | GNDA18 | | AY21 | | |
| N/A | TXPPAD18 | | BB20 | | |
| N/A | TXNPAD18 | | BB21 | | |
| N/A | VTTXPAD18 | | BA21 | | |
| N/A | AVCCAUXTX18 | | BA20 | | |
| N/A | AVCCAUXRX19 | | BA22 | | |
| N/A | VTRXPAD19 | | BA23 | | |
| N/A | RXNPAD19 | | BB22 | | |
| N/A | RXPPAD19 | | BB23 | | |
| N/A | GNDA19 | | AY22 | | |
| N/A | TXPPAD19 | | BB24 | | |
| N/A | TXNPAD19 | | BB25 | | |
| N/A | VTTXPAD19 | | BA25 | | |
| N/A | AVCCAUXTX19 | | BA24 | | |
| N/A | AVCCAUXRX20 | | BA26 | | |
| N/A | VTRXPAD20 | | BA27 | | |
| N/A | RXNPAD20 | | BB26 | | |
| N/A | RXPPAD20 | | BB27 | | |
| N/A | GNDA20 | | AY27 | | |
| N/A | TXPPAD20 | | BB28 | | |
| N/A | TXNPAD20 | | BB29 | | |
| N/A | VTTXPAD20 | | BA29 | | |
| N/A | AVCCAUXTX20 | | BA28 | | |
| N/A | AVCCAUXRX21 | | BA30 | | |
| N/A | VTRXPAD21 | | BA31 | | |
| N/A | RXNPAD21 | | BB30 | | |

*Table 13:* **FF1704 — XC2VP70, XC2VPX70, and XC2VP100**

| Bank | Pin Description | | Pin Number | No Connects | |
|---|---|---|---|---|---|
| | Virtex-II Pro Devices | XC2VPX70 (if Different) | | XC2VP70, XC2VPX70 | XC2VP100 |
| N/A | RXPPAD21 | | BB31 | | |
| N/A | GNDA21 | | AY31 | | |
| N/A | TXPPAD21 | | BB32 | | |
| N/A | TXNPAD21 | | BB33 | | |
| N/A | VTTXPAD21 | | BA33 | | |
| N/A | AVCCAUXTX21 | | BA32 | | |
| N/A | AVCCAUXRX22 | | BA34 | | |
| N/A | VTRXPAD22 | | BA35 | | |
| N/A | RXNPAD22 | | BB34 | | |
| N/A | RXPPAD22 | | BB35 | | |
| N/A | GNDA22 | | AY35 | | |
| N/A | TXPPAD22 | | BB36 | | |
| N/A | TXNPAD22 | | BB37 | | |
| N/A | VTTXPAD22 | | BA37 | | |
| N/A | AVCCAUXTX22 | | BA36 | | |
| N/A | AVCCAUXRX23 | | BA38 | | |
| N/A | VTRXPAD23 | | BA39 | | |
| N/A | RXNPAD23 | | BB38 | | |
| N/A | RXPPAD23 | | BB39 | | |
| N/A | GNDA23 | | AY39 | | |
| N/A | TXPPAD23 | | BB40 | | |
| N/A | TXNPAD23 | | BB41 | | |
| N/A | VTTXPAD23 | | BA41 | | |
| N/A | AVCCAUXTX23 | | BA40 | | |
| | | | | | |
| N/A | VCCINT | | AB27 | | |
| N/A | VCCINT | | AB16 | | |
| N/A | VCCINT | | AC27 | | |
| N/A | VCCINT | | AC16 | | |
| N/A | VCCINT | | AD27 | | |
| N/A | VCCINT | | AD16 | | |
| N/A | VCCINT | | AE27 | | |
| N/A | VCCINT | | AE16 | | |
| N/A | VCCINT | | AF27 | | |
| N/A | VCCINT | | AF26 | | |
| N/A | VCCINT | | AF17 | | |

*Table 13:* **FF1704 — XC2VP70, XC2VPX70, and XC2VP100**

| Bank | Pin Description | | Pin Number | No Connects | |
|---|---|---|---|---|---|
| | Virtex-II Pro Devices | XC2VPX70 (if Different) | | XC2VP70, XC2VPX70 | XC2VP100 |
| N/A | VCCINT | | AF16 | | |
| N/A | VCCINT | | AG27 | | |
| N/A | VCCINT | | AG26 | | |
| N/A | VCCINT | | AG25 | | |
| N/A | VCCINT | | AG24 | | |
| N/A | VCCINT | | AG23 | | |
| N/A | VCCINT | | AG22 | | |
| N/A | VCCINT | | AG21 | | |
| N/A | VCCINT | | AG20 | | |
| N/A | VCCINT | | AG19 | | |
| N/A | VCCINT | | AG18 | | |
| N/A | VCCINT | | AG17 | | |
| N/A | VCCINT | | AG16 | | |
| N/A | VCCINT | | AH28 | | |
| N/A | VCCINT | | AH27 | | |
| N/A | VCCINT | | AH26 | | |
| N/A | VCCINT | | AH17 | | |
| N/A | VCCINT | | AH16 | | |
| N/A | VCCINT | | AH15 | | |
| N/A | VCCINT | | AJ29 | | |
| N/A | VCCINT | | AJ28 | | |
| N/A | VCCINT | | AJ27 | | |
| N/A | VCCINT | | AJ16 | | |
| N/A | VCCINT | | AJ15 | | |
| N/A | VCCINT | | AJ14 | | |
| N/A | VCCINT | | AK30 | | |
| N/A | VCCINT | | AK13 | | |
| N/A | VCCINT | | AA27 | | |
| N/A | VCCINT | | AA16 | | |
| N/A | VCCINT | | Y27 | | |
| N/A | VCCINT | | Y16 | | |
| N/A | VCCINT | | W27 | | |
| N/A | VCCINT | | W16 | | |
| N/A | VCCINT | | V27 | | |
| N/A | VCCINT | | V16 | | |
| N/A | VCCINT | | U27 | | |

*Table 13:* **FF1704 — XC2VP70, XC2VPX70, and XC2VP100**

| Bank | Pin Description | | Pin Number | No Connects | |
|---|---|---|---|---|---|
| | Virtex-II Pro Devices | XC2VPX70 (if Different) | | XC2VP70, XC2VPX70 | XC2VP100 |
| N/A | VCCINT | | U26 | | |
| N/A | VCCINT | | U17 | | |
| N/A | VCCINT | | U16 | | |
| N/A | VCCINT | | T27 | | |
| N/A | VCCINT | | T26 | | |
| N/A | VCCINT | | T25 | | |
| N/A | VCCINT | | T24 | | |
| N/A | VCCINT | | T23 | | |
| N/A | VCCINT | | T22 | | |
| N/A | VCCINT | | T21 | | |
| N/A | VCCINT | | T20 | | |
| N/A | VCCINT | | T19 | | |
| N/A | VCCINT | | T18 | | |
| N/A | VCCINT | | T17 | | |
| N/A | VCCINT | | T16 | | |
| N/A | VCCINT | | R28 | | |
| N/A | VCCINT | | R27 | | |
| N/A | VCCINT | | R26 | | |
| N/A | VCCINT | | R17 | | |
| N/A | VCCINT | | R16 | | |
| N/A | VCCINT | | R15 | | |
| N/A | VCCINT | | P29 | | |
| N/A | VCCINT | | P28 | | |
| N/A | VCCINT | | P27 | | |
| N/A | VCCINT | | P16 | | |
| N/A | VCCINT | | P15 | | |
| N/A | VCCINT | | P14 | | |
| N/A | VCCINT | | N30 | | |
| N/A | VCCINT | | N13 | | |
| N/A | VCCAUX | | AB42 | | |
| N/A | VCCAUX | | AB41 | | |
| N/A | VCCAUX | | AB2 | | |
| N/A | VCCAUX | | AB1 | | |
| N/A | VCCAUX | | AC42 | | |
| N/A | VCCAUX | | AC1 | | |
| N/A | VCCAUX | | AM32 | | |

*Table 13:* **FF1704 — XC2VP70, XC2VPX70, and XC2VP100**

| Bank | Pin Description | | Pin Number | No Connects | |
|---|---|---|---|---|---|
| | Virtex-II Pro Devices | XC2VPX70 (if Different) | | XC2VP70, XC2VPX70 | XC2VP100 |
| N/A | VCCAUX | | AM11 | | |
| N/A | VCCAUX | | AN33 | | |
| N/A | VCCAUX | | AN10 | | |
| N/A | VCCAUX | | AV39 | | |
| N/A | VCCAUX | | AV4 | | |
| N/A | VCCAUX | | AW38 | | |
| N/A | VCCAUX | | AW22 | | |
| N/A | VCCAUX | | AW21 | | |
| N/A | VCCAUX | | AW5 | | |
| N/A | VCCAUX | | AA42 | | |
| N/A | VCCAUX | | AA41 | | |
| N/A | VCCAUX | | AA2 | | |
| N/A | VCCAUX | | AA1 | | |
| N/A | VCCAUX | | Y42 | | |
| N/A | VCCAUX | | Y1 | | |
| N/A | VCCAUX | | L32 | | |
| N/A | VCCAUX | | L11 | | |
| N/A | VCCAUX | | K33 | | |
| N/A | VCCAUX | | K10 | | |
| N/A | VCCAUX | | E39 | | |
| N/A | VCCAUX | | E4 | | |
| N/A | VCCAUX | | D38 | | |
| N/A | VCCAUX | | D22 | | |
| N/A | VCCAUX | | D21 | | |
| N/A | VCCAUX | | D5 | | |
| N/A | GND | | AB38 | | |
| N/A | GND | | AB35 | | |
| N/A | GND | | AB32 | | |
| N/A | GND | | AB26 | | |
| N/A | GND | | AB25 | | |
| N/A | GND | | AB24 | | |
| N/A | GND | | AB23 | | |
| N/A | GND | | AB22 | | |
| N/A | GND | | AB21 | | |
| N/A | GND | | AB20 | | |
| N/A | GND | | AB19 | | |

*Table 13:* **FF1704 — XC2VP70, XC2VPX70, and XC2VP100**

| Bank | Pin Description | | Pin Number | No Connects | |
|---|---|---|---|---|---|
| | Virtex-II Pro Devices | XC2VPX70 (if Different) | | XC2VP70, XC2VPX70 | XC2VP100 |
| N/A | GND | | AB18 | | |
| N/A | GND | | AB17 | | |
| N/A | GND | | AB11 | | |
| N/A | GND | | AB8 | | |
| N/A | GND | | AB5 | | |
| N/A | GND | | AC41 | | |
| N/A | GND | | AC26 | | |
| N/A | GND | | AC25 | | |
| N/A | GND | | AC24 | | |
| N/A | GND | | AC23 | | |
| N/A | GND | | AC22 | | |
| N/A | GND | | AC21 | | |
| N/A | GND | | AC20 | | |
| N/A | GND | | AC19 | | |
| N/A | GND | | AC18 | | |
| N/A | GND | | AC17 | | |
| N/A | GND | | AC2 | | |
| N/A | GND | | AD26 | | |
| N/A | GND | | AD25 | | |
| N/A | GND | | AD24 | | |
| N/A | GND | | AD23 | | |
| N/A | GND | | AD22 | | |
| N/A | GND | | AD21 | | |
| N/A | GND | | AD20 | | |
| N/A | GND | | AD19 | | |
| N/A | GND | | AD18 | | |
| N/A | GND | | AD17 | | |
| N/A | GND | | AE37 | | |
| N/A | GND | | AE34 | | |
| N/A | GND | | AE26 | | |
| N/A | GND | | AE25 | | |
| N/A | GND | | AE24 | | |
| N/A | GND | | AE23 | | |
| N/A | GND | | AE22 | | |
| N/A | GND | | AE21 | | |
| N/A | GND | | AE20 | | |

*Table 13:* **FF1704 — XC2VP70, XC2VPX70, and XC2VP100**

| Bank | Pin Description | | Pin Number | No Connects | |
|---|---|---|---|---|---|
| | Virtex-II Pro Devices | XC2VPX70 (if Different) | | XC2VP70, XC2VPX70 | XC2VP100 |
| N/A | GND | | AE19 | | |
| N/A | GND | | AE18 | | |
| N/A | GND | | AE17 | | |
| N/A | GND | | AE9 | | |
| N/A | GND | | AE6 | | |
| N/A | GND | | AF25 | | |
| N/A | GND | | AF24 | | |
| N/A | GND | | AF23 | | |
| N/A | GND | | AF22 | | |
| N/A | GND | | AF21 | | |
| N/A | GND | | AF20 | | |
| N/A | GND | | AF19 | | |
| N/A | GND | | AF18 | | |
| N/A | GND | | AG42 | | |
| N/A | GND | | AG1 | | |
| N/A | GND | | AH39 | | |
| N/A | GND | | AH36 | | |
| N/A | GND | | AH7 | | |
| N/A | GND | | AH4 | | |
| N/A | GND | | AL42 | | |
| N/A | GND | | AL1 | | |
| N/A | GND | | AM22 | | |
| N/A | GND | | AM21 | | |
| N/A | GND | | AN39 | | |
| N/A | GND | | AN4 | | |
| N/A | GND | | AP34 | | |
| N/A | GND | | AP9 | | |
| N/A | GND | | AR42 | | |
| N/A | GND | | AR35 | | |
| N/A | GND | | AR22 | | |
| N/A | GND | | AR21 | | |
| N/A | GND | | AR8 | | |
| N/A | GND | | AR1 | | |
| N/A | GND | | AT36 | | |
| N/A | GND | | AT7 | | |
| N/A | GND | | AU37 | | |

*Table 13:* **FF1704 — XC2VP70, XC2VPX70, and XC2VP100**

| Bank | Pin Description | | Pin Number | No Connects | |
|---|---|---|---|---|---|
| | Virtex-II Pro Devices | XC2VPX70 (if Different) | | XC2VP70, XC2VPX70 | XC2VP100 |
| N/A | GND | | AU25 | | |
| N/A | GND | | AU18 | | |
| N/A | GND | | AU6 | | |
| N/A | GND | | AV38 | | |
| N/A | GND | | AV22 | | |
| N/A | GND | | AV21 | | |
| N/A | GND | | AV5 | | |
| N/A | GND | | AW39 | | |
| N/A | GND | | AW32 | | |
| N/A | GND | | AW28 | | |
| N/A | GND | | AW15 | | |
| N/A | GND | | AW11 | | |
| N/A | GND | | AW4 | | |
| N/A | GND | | AY42 | | |
| N/A | GND | | AY41 | | |
| N/A | GND | | AY40 | | |
| N/A | GND | | AY3 | | |
| N/A | GND | | AY2 | | |
| N/A | GND | | AY1 | | |
| N/A | GND | | BA42 | | |
| N/A | GND | | BA1 | | |
| N/A | GND | | AA38 | | |
| N/A | GND | | AA35 | | |
| N/A | GND | | AA32 | | |
| N/A | GND | | AA26 | | |
| N/A | GND | | AA25 | | |
| N/A | GND | | AA24 | | |
| N/A | GND | | AA23 | | |
| N/A | GND | | AA22 | | |
| N/A | GND | | AA21 | | |
| N/A | GND | | AA20 | | |
| N/A | GND | | AA19 | | |
| N/A | GND | | AA18 | | |
| N/A | GND | | AA17 | | |
| N/A | GND | | AA11 | | |
| N/A | GND | | AA8 | | |

*Table 13:* **FF1704 — XC2VP70, XC2VPX70, and XC2VP100**

| Bank | Pin Description | | Pin Number | No Connects | |
|---|---|---|---|---|---|
| | Virtex-II Pro Devices | XC2VPX70 (if Different) | | XC2VP70, XC2VPX70 | XC2VP100 |
| N/A | GND | | AA5 | | |
| N/A | GND | | Y41 | | |
| N/A | GND | | Y26 | | |
| N/A | GND | | Y25 | | |
| N/A | GND | | Y24 | | |
| N/A | GND | | Y23 | | |
| N/A | GND | | Y22 | | |
| N/A | GND | | Y21 | | |
| N/A | GND | | Y20 | | |
| N/A | GND | | Y19 | | |
| N/A | GND | | Y18 | | |
| N/A | GND | | Y17 | | |
| N/A | GND | | Y2 | | |
| N/A | GND | | W26 | | |
| N/A | GND | | W25 | | |
| N/A | GND | | W24 | | |
| N/A | GND | | W23 | | |
| N/A | GND | | W22 | | |
| N/A | GND | | W21 | | |
| N/A | GND | | W20 | | |
| N/A | GND | | W19 | | |
| N/A | GND | | W18 | | |
| N/A | GND | | W17 | | |
| N/A | GND | | V37 | | |
| N/A | GND | | V34 | | |
| N/A | GND | | V26 | | |
| N/A | GND | | V25 | | |
| N/A | GND | | V24 | | |
| N/A | GND | | V23 | | |
| N/A | GND | | V22 | | |
| N/A | GND | | V21 | | |
| N/A | GND | | V20 | | |
| N/A | GND | | V19 | | |
| N/A | GND | | V18 | | |
| N/A | GND | | V17 | | |
| N/A | GND | | V9 | | |

*Table 13:* **FF1704 — XC2VP70, XC2VPX70, and XC2VP100**

| Bank | Pin Description | | Pin Number | No Connects | |
|---|---|---|---|---|---|
| | Virtex-II Pro Devices | XC2VPX70 (if Different) | | XC2VP70, XC2VPX70 | XC2VP100 |
| N/A | GND | | V6 | | |
| N/A | GND | | U25 | | |
| N/A | GND | | U24 | | |
| N/A | GND | | U23 | | |
| N/A | GND | | U22 | | |
| N/A | GND | | U21 | | |
| N/A | GND | | U20 | | |
| N/A | GND | | U19 | | |
| N/A | GND | | U18 | | |
| N/A | GND | | T42 | | |
| N/A | GND | | T1 | | |
| N/A | GND | | R39 | | |
| N/A | GND | | R36 | | |
| N/A | GND | | R7 | | |
| N/A | GND | | R4 | | |
| N/A | GND | | M42 | | |
| N/A | GND | | M1 | | |
| N/A | GND | | L22 | | |
| N/A | GND | | L21 | | |
| N/A | GND | | K39 | | |
| N/A | GND | | K4 | | |
| N/A | GND | | J34 | | |
| N/A | GND | | J9 | | |
| N/A | GND | | H42 | | |
| N/A | GND | | H35 | | |
| N/A | GND | | H22 | | |
| N/A | GND | | H21 | | |
| N/A | GND | | H8 | | |
| N/A | GND | | H1 | | |
| N/A | GND | | G36 | | |
| N/A | GND | | G7 | | |
| N/A | GND | | F37 | | |
| N/A | GND | | F25 | | |
| N/A | GND | | F18 | | |
| N/A | GND | | F6 | | |
| N/A | GND | | E38 | | |

*Table 13:* **FF1704 — XC2VP70, XC2VPX70, and XC2VP100**

| Bank | Pin Description | | Pin Number | No Connects | |
|---|---|---|---|---|---|
| | Virtex-II Pro Devices | XC2VPX70 (if Different) | | XC2VP70, XC2VPX70 | XC2VP100 |
| N/A | GND | | E22 | | |
| N/A | GND | | E21 | | |
| N/A | GND | | E5 | | |
| N/A | GND | | D39 | | |
| N/A | GND | | D32 | | |
| N/A | GND | | D28 | | |
| N/A | GND | | D15 | | |
| N/A | GND | | D11 | | |
| N/A | GND | | D4 | | |
| N/A | GND | | C42 | | |
| N/A | GND | | C41 | | |
| N/A | GND | | C40 | | |
| N/A | GND | | C3 | | |
| N/A | GND | | C2 | | |
| N/A | GND | | C1 | | |
| N/A | GND | | B42 | | |
| N/A | GND | | B1 | | |
| N/A | GND | | N14 | | |
| N/A | GND | | N29 | | |
| N/A | GND | | AK14 | | |
| N/A | GND | | AK29 | | |
| N/A | GND | | P13 | | |
| N/A | GND | | P30 | | |
| N/A | GND | | AJ13 | | |
| N/A | GND | | AJ30 | | |

**Notes:**
1. See Table 4 for an explanation of the signals available on this pin.

## FF1704 Flip-Chip Fine-Pitch BGA Package Specifications (1.00mm pitch)

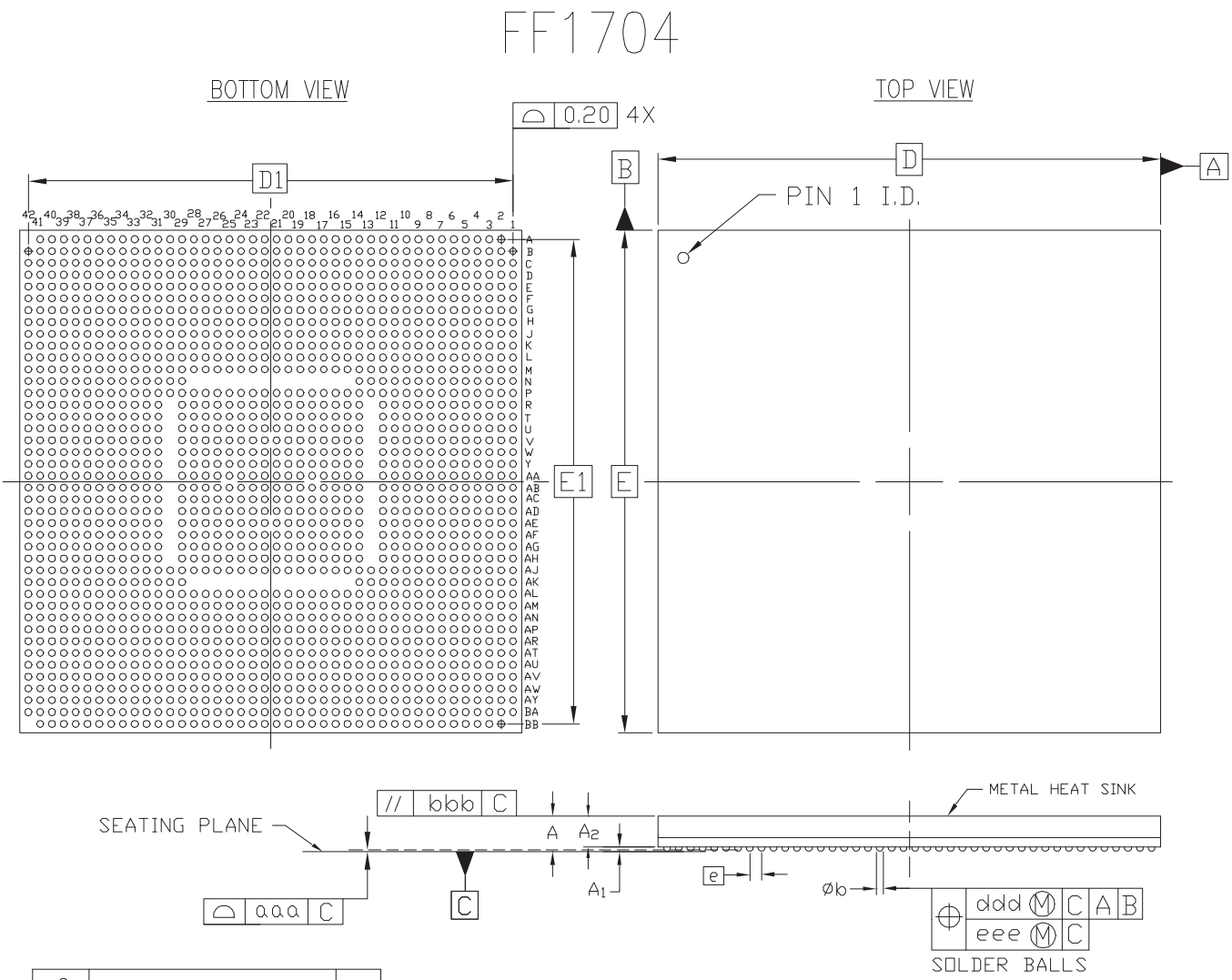


| SYMBOL | MILLIMETERS | | | NOTE |
|---|---|---|---|---|
| | MIN. | NOM. | MAX. | |
| A | — | 3.20 | 3.45 | |
| $A_1$ | 0.40 | 0.50 | 0.60 | |
| $A_2$ | — | — | 2.85 | |
| D/E | 42.50 BASIC | | | |
| $D_1/E_1$ | 41.00 REF | | | |
| e | 1.00 BASIC | | | |
| Øb | 0.50 | 0.60 | 0.70 | |
| aaa | — | — | 0.20 | |
| bbb | — | — | 0.25 | |
| ddd | — | — | 0.25 | |
| eee | — | — | 0.10 | |
| M | | 42 | | 2 |

NOTES:

1. ALL DIMENSIONS AND TOLERANCES CONFORM TO ASME Y14.5M-1994
2. SYMBOL "M" IS THE PIN MATRIX SIZE.
3. CONFORMS TO JEDEC MS-034-AAV-1 (DEPOPULATED)

*Figure 9:* **FF1704 Flip-Chip Fine-Pitch BGA Package Specifications**

## FF1696 Flip-Chip Fine-Pitch BGA Package

As shown in Table 14, XC2VP100 Virtex-II Pro devices are available in the FF1696 flip-chip fine-pitch BGA package. Following this table are the FF1696 Flip-Chip Fine-Pitch BGA Package Specifications (1.00mm pitch).

*Table 14:* **FF1696 — XC2VP100**

| Bank | Pin Description | Pin Number | No Connects |
|---|---|---|---|
| | | | XC2VP100 |
| 0 | IO_L01N_0/VRP_0 | E33 | |
| 0 | IO_L01P_0/VRN_0 | F33 | |
| 0 | IO_L02N_0 | K32 | |
| 0 | IO_L02P_0 | L32 | |
| 0 | IO_L03N_0 | C32 | |
| 0 | IO_L03P_0/VREF_0 | C33 | |
| 0 | IO_L05_0/No_Pair | G33 | |
| 0 | IO_L06N_0 | A33 | |
| 0 | IO_L06P_0 | B33 | |
| 0 | IO_L07N_0 | F32 | |
| 0 | IO_L07P_0 | G32 | |
| 0 | IO_L08N_0 | H32 | |
| 0 | IO_L08P_0 | J32 | |
| 0 | IO_L09N_0 | D32 | |
| 0 | IO_L09P_0/VREF_0 | E32 | |
| 0 | IO_L19N_0 | A32 | |
| 0 | IO_L19P_0 | B32 | |
| 0 | IO_L20N_0 | K31 | |
| 0 | IO_L20P_0 | L31 | |
| 0 | IO_L21N_0 | H30 | |
| 0 | IO_L21P_0 | G31 | |
| 0 | IO_L25N_0 | E31 | |
| 0 | IO_L25P_0 | F31 | |
| 0 | IO_L26N_0 | H31 | |
| 0 | IO_L26P_0 | J31 | |
| 0 | IO_L27N_0 | D30 | |
| 0 | IO_L27P_0/VREF_0 | D31 | |
| 0 | IO_L28N_0 | B31 | |
| 0 | IO_L28P_0 | C31 | |
| 0 | IO_L29N_0 | K30 | |
| 0 | IO_L29P_0 | L30 | |
| 0 | IO_L30N_0 | F30 | |
| 0 | IO_L30P_0 | G30 | |
| 0 | IO_L34N_0 | B30 | |

*Table 14:* **FF1696 — XC2VP100**

| Bank | Pin Description | Pin Number | No Connects |
|---|---|---|---|
| | | | XC2VP100 |
| 0 | IO_L34P_0 | C30 | |
| 0 | IO_L35N_0 | L29 | |
| 0 | IO_L35P_0 | M29 | |
| 0 | IO_L36N_0 | H28 | |
| 0 | IO_L36P_0/VREF_0 | G29 | |
| 0 | IO_L76N_0 | E29 | |
| 0 | IO_L76P_0 | F29 | |
| 0 | IO_L77N_0 | J29 | |
| 0 | IO_L77P_0 | K29 | |
| 0 | IO_L78N_0 | D28 | |
| 0 | IO_L78P_0 | C29 | |
| 0 | IO_L79N_0 | A29 | |
| 0 | IO_L79P_0 | B29 | |
| 0 | IO_L80_0/No_Pair | L28 | |
| 0 | IO_L83_0/No_Pair | M28 | |
| 0 | IO_L84N_0 | G27 | |
| 0 | IO_L84P_0 | G28 | |
| 0 | IO_L85N_0 | E28 | |
| 0 | IO_L85P_0 | F28 | |
| 0 | IO_L86N_0 | J28 | |
| 0 | IO_L86P_0 | K28 | |
| 0 | IO_L87N_0 | C27 | |
| 0 | IO_L87P_0/VREF_0 | C28 | |
| 0 | IO_L37N_0 | A28 | |
| 0 | IO_L37P_0 | B28 | |
| 0 | IO_L38N_0 | L27 | |
| 0 | IO_L38P_0 | M27 | |
| 0 | IO_L39N_0 | H26 | |
| 0 | IO_L39P_0 | H27 | |
| 0 | IO_L43N_0 | E27 | |
| 0 | IO_L43P_0 | F27 | |
| 0 | IO_L44N_0 | J27 | |
| 0 | IO_L44P_0 | K27 | |
| 0 | IO_L45N_0 | D26 | |
| 0 | IO_L45P_0/VREF_0 | D27 | |
| 0 | IO_L10N_0 | A27 | NC |
| 0 | IO_L10P_0 | B27 | NC |

*Table 14:* **FF1696 — XC2VP100**

| Bank | Pin Description | Pin Number | No Connects XC2VP100 |
|---|---|---|---|
| 0 | IO_L11N_0 | M25 | NC |
| 0 | IO_L11P_0 | M26 | NC |
| 0 | IO_L12N_0 | F26 | NC |
| 0 | IO_L12P_0 | G26 | NC |
| 0 | IO_L18N_0 | B26 | NC |
| 0 | IO_L18P_0/VREF_0 | C26 | NC |
| 0 | IO_L46N_0 | G24 | |
| 0 | IO_L46P_0 | G25 | |
| 0 | IO_L47N_0 | K26 | |
| 0 | IO_L47P_0 | L26 | |
| 0 | IO_L48N_0 | E25 | |
| 0 | IO_L48P_0 | F25 | |
| 0 | IO_L49N_0 | C24 | |
| 0 | IO_L49P_0 | C25 | |
| 0 | IO_L50_0/No_Pair | L24 | |
| 0 | IO_L53_0/No_Pair | L25 | |
| 0 | IO_L54N_0 | A25 | |
| 0 | IO_L54P_0 | B25 | |
| 0 | IO_L55N_0 | H23 | |
| 0 | IO_L55P_0 | H24 | |
| 0 | IO_L56N_0 | J25 | |
| 0 | IO_L56P_0 | K25 | |
| 0 | IO_L57N_0 | E24 | |
| 0 | IO_L57P_0/VREF_0 | F24 | |
| 0 | IO_L58N_0 | D23 | |
| 0 | IO_L58P_0 | D24 | |
| 0 | IO_L59N_0 | J24 | |
| 0 | IO_L59P_0 | K24 | |
| 0 | IO_L60N_0 | A24 | |
| 0 | IO_L60P_0 | B24 | |
| 0 | IO_L64N_0 | F23 | |
| 0 | IO_L64P_0 | G23 | |
| 0 | IO_L65N_0 | M22 | |
| 0 | IO_L65P_0 | M23 | |
| 0 | IO_L66N_0 | B23 | |
| 0 | IO_L66P_0/VREF_0 | C23 | |
| 0 | IO_L67N_0 | H22 | |

*Table 14:* **FF1696 — XC2VP100**

| Bank | Pin Description | Pin Number | No Connects |
|---|---|---|---|
| | | | XC2VP100 |
| 0 | IO_L67P_0 | J22 | |
| 0 | IO_L68N_0 | K23 | |
| 0 | IO_L68P_0 | L23 | |
| 0 | IO_L69N_0 | F22 | |
| 0 | IO_L69P_0/VREF_0 | G22 | |
| 0 | IO_L73N_0 | D22 | |
| 0 | IO_L73P_0 | E22 | |
| 0 | IO_L74N_0/GCLK7P | K22 | |
| 0 | IO_L74P_0/GCLK6S | L22 | |
| 0 | IO_L75N_0/GCLK5P | B22 | |
| 0 | IO_L75P_0/GCLK4S | C22 | |
| | | | |
| 1 | IO_L75N_1/GCLK3P | C21 | |
| 1 | IO_L75P_1/GCLK2S | B21 | |
| 1 | IO_L74N_1/GCLK1P | L21 | |
| 1 | IO_L74P_1/GCLK0S | K21 | |
| 1 | IO_L73N_1 | E21 | |
| 1 | IO_L73P_1 | D21 | |
| 1 | IO_L69N_1/VREF_1 | G21 | |
| 1 | IO_L69P_1 | F21 | |
| 1 | IO_L68N_1 | L20 | |
| 1 | IO_L68P_1 | K20 | |
| 1 | IO_L67N_1 | J21 | |
| 1 | IO_L67P_1 | H21 | |
| 1 | IO_L66N_1/VREF_1 | C20 | |
| 1 | IO_L66P_1 | B20 | |
| 1 | IO_L65N_1 | M20 | |
| 1 | IO_L65P_1 | M21 | |
| 1 | IO_L64N_1 | G20 | |
| 1 | IO_L64P_1 | F20 | |
| 1 | IO_L60N_1 | B19 | |
| 1 | IO_L60P_1 | A19 | |
| 1 | IO_L59N_1 | K19 | |
| 1 | IO_L59P_1 | J19 | |
| 1 | IO_L58N_1 | D19 | |
| 1 | IO_L58P_1 | D20 | |
| 1 | IO_L57N_1/VREF_1 | F19 | |

*Table 14:* **FF1696 — XC2VP100**

| Bank | Pin Description | Pin Number | No Connects |
|---|---|---|---|
| | | | XC2VP100 |
| 1 | IO_L57P_1 | E19 | |
| 1 | IO_L56N_1 | K18 | |
| 1 | IO_L56P_1 | J18 | |
| 1 | IO_L55N_1 | H19 | |
| 1 | IO_L55P_1 | H20 | |
| 1 | IO_L54N_1 | B18 | |
| 1 | IO_L54P_1 | A18 | |
| 1 | IO_L53_1/No_Pair | L18 | |
| 1 | IO_L50_1/No_Pair | L19 | |
| 1 | IO_L49N_1 | C18 | |
| 1 | IO_L49P_1 | C19 | |
| 1 | IO_L48N_1 | F18 | |
| 1 | IO_L48P_1 | E18 | |
| 1 | IO_L47N_1 | L17 | |
| 1 | IO_L47P_1 | K17 | |
| 1 | IO_L46N_1 | G18 | |
| 1 | IO_L46P_1 | G19 | |
| 1 | IO_L18N_1/VREF_1 | C17 | NC |
| 1 | IO_L18P_1 | B17 | NC |
| 1 | IO_L12N_1 | G17 | NC |
| 1 | IO_L12P_1 | F17 | NC |
| 1 | IO_L11N_1 | M17 | NC |
| 1 | IO_L11P_1 | M18 | NC |
| 1 | IO_L10N_1 | B16 | NC |
| 1 | IO_L10P_1 | A16 | NC |
| 1 | IO_L45N_1/VREF_1 | D16 | |
| 1 | IO_L45P_1 | D17 | |
| 1 | IO_L44N_1 | K16 | |
| 1 | IO_L44P_1 | J16 | |
| 1 | IO_L43N_1 | F16 | |
| 1 | IO_L43P_1 | E16 | |
| 1 | IO_L39N_1 | H16 | |
| 1 | IO_L39P_1 | H17 | |
| 1 | IO_L38N_1 | M16 | |
| 1 | IO_L38P_1 | L16 | |
| 1 | IO_L37N_1 | B15 | |
| 1 | IO_L37P_1 | A15 | |

*Table 14:* **FF1696 — XC2VP100**

| Bank | Pin Description | Pin Number | No Connects |
|---|---|---|---|
| | | | XC2VP100 |
| 1 | IO_L87N_1/VREF_1 | C15 | |
| 1 | IO_L87P_1 | C16 | |
| 1 | IO_L86N_1 | K15 | |
| 1 | IO_L86P_1 | J15 | |
| 1 | IO_L85N_1 | F15 | |
| 1 | IO_L85P_1 | E15 | |
| 1 | IO_L84N_1 | G15 | |
| 1 | IO_L84P_1 | G16 | |
| 1 | IO_L83_1/No_Pair | M15 | |
| 1 | IO_L80_1/No_Pair | L15 | |
| 1 | IO_L79N_1 | B14 | |
| 1 | IO_L79P_1 | A14 | |
| 1 | IO_L78N_1 | C14 | |
| 1 | IO_L78P_1 | D15 | |
| 1 | IO_L77N_1 | K14 | |
| 1 | IO_L77P_1 | J14 | |
| 1 | IO_L76N_1 | F14 | |
| 1 | IO_L76P_1 | E14 | |
| 1 | IO_L36N_1/VREF_1 | G14 | |
| 1 | IO_L36P_1 | H15 | |
| 1 | IO_L35N_1 | M14 | |
| 1 | IO_L35P_1 | L14 | |
| 1 | IO_L34N_1 | C13 | |
| 1 | IO_L34P_1 | B13 | |
| 1 | IO_L30N_1 | G13 | |
| 1 | IO_L30P_1 | F13 | |
| 1 | IO_L29N_1 | L13 | |
| 1 | IO_L29P_1 | K13 | |
| 1 | IO_L28N_1 | C12 | |
| 1 | IO_L28P_1 | B12 | |
| 1 | IO_L27N_1/VREF_1 | D12 | |
| 1 | IO_L27P_1 | D13 | |
| 1 | IO_L26N_1 | J12 | |
| 1 | IO_L26P_1 | H12 | |
| 1 | IO_L25N_1 | F12 | |
| 1 | IO_L25P_1 | E12 | |
| 1 | IO_L21N_1 | G12 | |

*Table 14:* **FF1696 — XC2VP100**

| Bank | Pin Description | Pin Number | No Connects XC2VP100 |
|---|---|---|---|
| 1 | IO_L21P_1 | H13 | |
| 1 | IO_L20N_1 | L12 | |
| 1 | IO_L20P_1 | K12 | |
| 1 | IO_L19N_1 | B11 | |
| 1 | IO_L19P_1 | A11 | |
| 1 | IO_L09N_1/VREF_1 | E11 | |
| 1 | IO_L09P_1 | D11 | |
| 1 | IO_L08N_1 | J11 | |
| 1 | IO_L08P_1 | H11 | |
| 1 | IO_L07N_1 | G11 | |
| 1 | IO_L07P_1 | F11 | |
| 1 | IO_L06N_1 | B10 | |
| 1 | IO_L06P_1 | A10 | |
| 1 | IO_L05_1/No_Pair | G10 | |
| 1 | IO_L03N_1/VREF_1 | C10 | |
| 1 | IO_L03P_1 | C11 | |
| 1 | IO_L02N_1 | L11 | |
| 1 | IO_L02P_1 | K11 | |
| 1 | IO_L01N_1/VRP_1 | F10 | |
| 1 | IO_L01P_1/VRN_1 | E10 | |
| | | | |
| 2 | IO_L01N_2/VRP_2 | B8 | |
| 2 | IO_L01P_2/VRN_2 | A8 | |
| 2 | IO_L02N_2 | C9 | |
| 2 | IO_L02P_2 | B9 | |
| 2 | IO_L03N_2 | B7 | |
| 2 | IO_L03P_2 | A7 | |
| 2 | IO_L04N_2/VREF_2 | B6 | |
| 2 | IO_L04P_2 | A6 | |
| 2 | IO_L05N_2 | D8 | |
| 2 | IO_L05P_2 | D9 | |
| 2 | IO_L06N_2 | B4 | |
| 2 | IO_L06P_2 | A4 | |
| 2 | IO_L73N_2 | C7 | |
| 2 | IO_L73P_2 | C8 | |
| 2 | IO_L74N_2 | G9 | |
| 2 | IO_L74P_2 | F9 | |

*Table 14:* **FF1696 — XC2VP100**

| Bank | Pin Description | Pin Number | No Connects |
|---|---|---|---|
| | | | XC2VP100 |
| 2 | IO_L75N_2 | C5 | |
| 2 | IO_L75P_2 | B5 | |
| 2 | IO_L76N_2/VREF_2 | D7 | |
| 2 | IO_L76P_2 | C6 | |
| 2 | IO_L77N_2 | H8 | |
| 2 | IO_L77P_2 | H9 | |
| 2 | IO_L78N_2 | C3 | |
| 2 | IO_L78P_2 | C4 | |
| 2 | IO_L79N_2 | D1 | |
| 2 | IO_L79P_2 | D2 | |
| 2 | IO_L80N_2 | J8 | |
| 2 | IO_L80P_2 | K9 | |
| 2 | IO_L81N_2 | E6 | |
| 2 | IO_L81P_2 | D5 | |
| 2 | IO_L82N_2/VREF_2 | E4 | |
| 2 | IO_L82P_2 | D4 | |
| 2 | IO_L83N_2 | L8 | |
| 2 | IO_L83P_2 | L9 | |
| 2 | IO_L84N_2 | E3 | |
| 2 | IO_L84P_2 | D3 | |
| 2 | IO_L61N_2 | F8 | |
| 2 | IO_L61P_2 | E8 | |
| 2 | IO_L62N_2 | M8 | |
| 2 | IO_L62P_2 | M9 | |
| 2 | IO_L63N_2 | F7 | |
| 2 | IO_L63P_2 | E7 | |
| 2 | IO_L64N_2/VREF_2 | F3 | |
| 2 | IO_L64P_2 | E2 | |
| 2 | IO_L65N_2 | N12 | |
| 2 | IO_L65P_2 | P12 | |
| 2 | IO_L66N_2 | F1 | |
| 2 | IO_L66P_2 | F2 | |
| 2 | IO_L67N_2 | G7 | |
| 2 | IO_L67P_2 | G8 | |
| 2 | IO_L68N_2 | N10 | |
| 2 | IO_L68P_2 | N11 | |
| 2 | IO_L69N_2 | G6 | |

*Table 14:* **FF1696 — XC2VP100**

| Bank | Pin Description | Pin Number | No Connects |
|---|---|---|---|
| | | | XC2VP100 |
| 2 | IO_L69P_2 | F6 | |
| 2 | IO_L70N_2/VREF_2 | G5 | |
| 2 | IO_L70P_2 | F5 | |
| 2 | IO_L71N_2 | P10 | |
| 2 | IO_L71P_2 | P11 | |
| 2 | IO_L72N_2 | G3 | |
| 2 | IO_L72P_2 | G4 | |
| 2 | IO_L07N_2 | G1 | |
| 2 | IO_L07P_2 | G2 | |
| 2 | IO_L08N_2 | N8 | |
| 2 | IO_L08P_2 | P9 | |
| 2 | IO_L09N_2 | H6 | |
| 2 | IO_L09P_2 | H7 | |
| 2 | IO_L10N_2/VREF_2 | H4 | |
| 2 | IO_L10P_2 | H5 | |
| 2 | IO_L11N_2 | R12 | |
| 2 | IO_L11P_2 | T12 | |
| 2 | IO_L12N_2 | H2 | |
| 2 | IO_L12P_2 | H3 | |
| 2 | IO_L13N_2 | J6 | |
| 2 | IO_L13P_2 | J7 | |
| 2 | IO_L14N_2 | R10 | |
| 2 | IO_L14P_2 | R11 | |
| 2 | IO_L15N_2 | J3 | |
| 2 | IO_L15P_2 | J4 | |
| 2 | IO_L16N_2/VREF_2 | J2 | |
| 2 | IO_L16P_2 | H1 | |
| 2 | IO_L17N_2 | R8 | |
| 2 | IO_L17P_2 | R9 | |
| 2 | IO_L18N_2 | K5 | |
| 2 | IO_L18P_2 | K6 | |
| 2 | IO_L19N_2 | K1 | |
| 2 | IO_L19P_2 | K2 | |
| 2 | IO_L20N_2 | T10 | |
| 2 | IO_L20P_2 | T11 | |
| 2 | IO_L21N_2 | L7 | |
| 2 | IO_L21P_2 | K7 | |

*Table 14:* **FF1696 — XC2VP100**

| Bank | Pin Description | Pin Number | No Connects |
|---|---|---|---|
| | | | XC2VP100 |
| 2 | IO_L22N_2/VREF_2 | L4 | |
| 2 | IO_L22P_2 | L5 | |
| 2 | IO_L23N_2 | T8 | |
| 2 | IO_L23P_2 | T9 | |
| 2 | IO_L24N_2 | L3 | |
| 2 | IO_L24P_2 | K3 | |
| 2 | IO_L25N_2 | L1 | |
| 2 | IO_L25P_2 | L2 | |
| 2 | IO_L26N_2 | U12 | |
| 2 | IO_L26P_2 | V12 | |
| 2 | IO_L27N_2 | M7 | |
| 2 | IO_L27P_2 | L6 | |
| 2 | IO_L28N_2/VREF_2 | M5 | |
| 2 | IO_L28P_2 | M6 | |
| 2 | IO_L29N_2 | U10 | |
| 2 | IO_L29P_2 | U11 | |
| 2 | IO_L30N_2 | M3 | |
| 2 | IO_L30P_2 | M4 | |
| 2 | IO_L31N_2 | N6 | |
| 2 | IO_L31P_2 | N7 | |
| 2 | IO_L32N_2 | U7 | |
| 2 | IO_L32P_2 | U8 | |
| 2 | IO_L33N_2 | N3 | |
| 2 | IO_L33P_2 | N4 | |
| 2 | IO_L34N_2/VREF_2 | N2 | |
| 2 | IO_L34P_2 | M2 | |
| 2 | IO_L35N_2 | V10 | |
| 2 | IO_L35P_2 | V11 | |
| 2 | IO_L36N_2 | P6 | |
| 2 | IO_L36P_2 | P7 | |
| 2 | IO_L37N_2 | P1 | |
| 2 | IO_L37P_2 | P2 | |
| 2 | IO_L38N_2 | V8 | |
| 2 | IO_L38P_2 | V9 | |
| 2 | IO_L39N_2 | R6 | |
| 2 | IO_L39P_2 | P5 | |
| 2 | IO_L40N_2/VREF_2 | R4 | |

*Table 14:* **FF1696 — XC2VP100**

| Bank | Pin Description | Pin Number | No Connects |
|---|---|---|---|
| | | | XC2VP100 |
| 2 | IO_L40P_2 | R5 | |
| 2 | IO_L41N_2 | V6 | |
| 2 | IO_L41P_2 | V7 | |
| 2 | IO_L42N_2 | R3 | |
| 2 | IO_L42P_2 | P3 | |
| 2 | IO_L43N_2 | R1 | |
| 2 | IO_L43P_2 | R2 | |
| 2 | IO_L44N_2 | W10 | |
| 2 | IO_L44P_2 | W11 | |
| 2 | IO_L45N_2 | T7 | |
| 2 | IO_L45P_2 | R7 | |
| 2 | IO_L46N_2/VREF_2 | T4 | |
| 2 | IO_L46P_2 | T5 | |
| 2 | IO_L47N_2 | W9 | |
| 2 | IO_L47P_2 | Y10 | |
| 2 | IO_L48N_2 | T1 | |
| 2 | IO_L48P_2 | T2 | |
| 2 | IO_L49N_2 | U6 | |
| 2 | IO_L49P_2 | T6 | |
| 2 | IO_L50N_2 | W7 | |
| 2 | IO_L50P_2 | Y8 | |
| 2 | IO_L51N_2 | U4 | |
| 2 | IO_L51P_2 | T3 | |
| 2 | IO_L52N_2/VREF_2 | U2 | |
| 2 | IO_L52P_2 | U3 | |
| 2 | IO_L53N_2 | Y11 | |
| 2 | IO_L53P_2 | Y12 | |
| 2 | IO_L54N_2 | V4 | |
| 2 | IO_L54P_2 | V5 | |
| 2 | IO_L55N_2 | V1 | |
| 2 | IO_L55P_2 | V2 | |
| 2 | IO_L56N_2 | Y6 | |
| 2 | IO_L56P_2 | Y7 | |
| 2 | IO_L57N_2 | W5 | |
| 2 | IO_L57P_2 | W6 | |
| 2 | IO_L58N_2/VREF_2 | W3 | |
| 2 | IO_L58P_2 | V3 | |

*Table 14:* **FF1696 — XC2VP100**

| Bank | Pin Description | Pin Number | No Connects |
|---|---|---|---|
| | | | XC2VP100 |
| 2 | IO_L59N_2 | AA11 | |
| 2 | IO_L59P_2 | AA12 | |
| 2 | IO_L60N_2 | W1 | |
| 2 | IO_L60P_2 | W2 | |
| 2 | IO_L85N_2 | Y2 | |
| 2 | IO_L85P_2 | Y3 | |
| 2 | IO_L86N_2 | AA9 | |
| 2 | IO_L86P_2 | AA10 | |
| 2 | IO_L87N_2 | AA5 | |
| 2 | IO_L87P_2 | AA6 | |
| 2 | IO_L88N_2/VREF_2 | AA4 | |
| 2 | IO_L88P_2 | Y4 | |
| 2 | IO_L89N_2 | AA7 | |
| 2 | IO_L89P_2 | AA8 | |
| 2 | IO_L90N_2 | AA2 | |
| 2 | IO_L90P_2 | AA3 | |
| | | | |
| 3 | IO_L90N_3 | AB5 | |
| 3 | IO_L90P_3 | AB6 | |
| 3 | IO_L89N_3 | AB11 | |
| 3 | IO_L89P_3 | AB12 | |
| 3 | IO_L88N_3 | AB2 | |
| 3 | IO_L88P_3 | AB3 | |
| 3 | IO_L87N_3/VREF_3 | AB4 | |
| 3 | IO_L87P_3 | AC4 | |
| 3 | IO_L86N_3 | AB9 | |
| 3 | IO_L86P_3 | AB10 | |
| 3 | IO_L85N_3 | AC2 | |
| 3 | IO_L85P_3 | AC3 | |
| 3 | IO_L60N_3 | AD5 | |
| 3 | IO_L60P_3 | AD6 | |
| 3 | IO_L59N_3 | AB7 | |
| 3 | IO_L59P_3 | AB8 | |
| 3 | IO_L58N_3 | AD1 | |
| 3 | IO_L58P_3 | AD2 | |
| 3 | IO_L57N_3/VREF_3 | AE4 | |
| 3 | IO_L57P_3 | AE5 | |

*Table 14:* **FF1696 — XC2VP100**

| Bank | Pin Description | Pin Number | No Connects |
|---|---|---|---|
| | | | XC2VP100 |
| 3 | IO_L56N_3 | AC11 | |
| 3 | IO_L56P_3 | AC12 | |
| 3 | IO_L55N_3 | AD3 | |
| 3 | IO_L55P_3 | AE3 | |
| 3 | IO_L54N_3 | AE1 | |
| 3 | IO_L54P_3 | AE2 | |
| 3 | IO_L53N_3 | AC6 | |
| 3 | IO_L53P_3 | AC7 | |
| 3 | IO_L52N_3 | AF2 | |
| 3 | IO_L52P_3 | AF3 | |
| 3 | IO_L51N_3/VREF_3 | AF6 | |
| 3 | IO_L51P_3 | AG6 | |
| 3 | IO_L50N_3 | AD10 | |
| 3 | IO_L50P_3 | AD11 | |
| 3 | IO_L49N_3 | AG4 | |
| 3 | IO_L49P_3 | AG5 | |
| 3 | IO_L48N_3 | AF4 | |
| 3 | IO_L48P_3 | AG3 | |
| 3 | IO_L47N_3 | AC10 | |
| 3 | IO_L47P_3 | AD9 | |
| 3 | IO_L46N_3 | AG1 | |
| 3 | IO_L46P_3 | AG2 | |
| 3 | IO_L45N_3/VREF_3 | AG7 | |
| 3 | IO_L45P_3 | AH7 | |
| 3 | IO_L44N_3 | AC8 | |
| 3 | IO_L44P_3 | AD7 | |
| 3 | IO_L43N_3 | AH4 | |
| 3 | IO_L43P_3 | AH5 | |
| 3 | IO_L42N_3 | AH1 | |
| 3 | IO_L42P_3 | AH2 | |
| 3 | IO_L41N_3 | AE10 | |
| 3 | IO_L41P_3 | AE11 | |
| 3 | IO_L40N_3 | AJ6 | |
| 3 | IO_L40P_3 | AJ7 | |
| 3 | IO_L39N_3/VREF_3 | AH6 | |
| 3 | IO_L39P_3 | AJ5 | |
| 3 | IO_L38N_3 | AE8 | |

*Table 14:* **FF1696 — XC2VP100**

| Bank | Pin Description | Pin Number | No Connects |
|---|---|---|---|
| | | | XC2VP100 |
| 3 | IO_L38P_3 | AE9 | |
| 3 | IO_L37N_3 | AH3 | |
| 3 | IO_L37P_3 | AJ3 | |
| 3 | IO_L36N_3 | AJ1 | |
| 3 | IO_L36P_3 | AJ2 | |
| 3 | IO_L35N_3 | AE6 | |
| 3 | IO_L35P_3 | AE7 | |
| 3 | IO_L34N_3 | AK6 | |
| 3 | IO_L34P_3 | AK7 | |
| 3 | IO_L33N_3/VREF_3 | AK3 | |
| 3 | IO_L33P_3 | AK4 | |
| 3 | IO_L32N_3 | AE12 | |
| 3 | IO_L32P_3 | AF12 | |
| 3 | IO_L31N_3 | AL5 | |
| 3 | IO_L31P_3 | AL6 | |
| 3 | IO_L30N_3 | AL3 | |
| 3 | IO_L30P_3 | AL4 | |
| 3 | IO_L29N_3 | AF10 | |
| 3 | IO_L29P_3 | AF11 | |
| 3 | IO_L28N_3 | AK2 | |
| 3 | IO_L28P_3 | AL2 | |
| 3 | IO_L27N_3/VREF_3 | AL7 | |
| 3 | IO_L27P_3 | AM6 | |
| 3 | IO_L26N_3 | AF7 | |
| 3 | IO_L26P_3 | AF8 | |
| 3 | IO_L25N_3 | AM4 | |
| 3 | IO_L25P_3 | AM5 | |
| 3 | IO_L24N_3 | AM1 | |
| 3 | IO_L24P_3 | AM2 | |
| 3 | IO_L23N_3 | AG10 | |
| 3 | IO_L23P_3 | AG11 | |
| 3 | IO_L22N_3 | AM7 | |
| 3 | IO_L22P_3 | AN7 | |
| 3 | IO_L21N_3/VREF_3 | AN5 | |
| 3 | IO_L21P_3 | AN6 | |
| 3 | IO_L20N_3 | AG8 | |
| 3 | IO_L20P_3 | AG9 | |

*Table 14:* **FF1696 — XC2VP100**

| Bank | Pin Description | Pin Number | No Connects |
|---|---|---|---|
| | | | XC2VP100 |
| 3 | IO_L19N_3 | AM3 | |
| 3 | IO_L19P_3 | AN3 | |
| 3 | IO_L18N_3 | AN1 | |
| 3 | IO_L18P_3 | AN2 | |
| 3 | IO_L17N_3 | AG12 | |
| 3 | IO_L17P_3 | AH12 | |
| 3 | IO_L16N_3 | AP6 | |
| 3 | IO_L16P_3 | AP7 | |
| 3 | IO_L15N_3/VREF_3 | AP3 | |
| 3 | IO_L15P_3 | AP4 | |
| 3 | IO_L14N_3 | AH10 | |
| 3 | IO_L14P_3 | AH11 | |
| 3 | IO_L13N_3 | AR6 | |
| 3 | IO_L13P_3 | AR7 | |
| 3 | IO_L12N_3 | AR4 | |
| 3 | IO_L12P_3 | AR5 | |
| 3 | IO_L11N_3 | AH8 | |
| 3 | IO_L11P_3 | AH9 | |
| 3 | IO_L10N_3 | AR2 | |
| 3 | IO_L10P_3 | AR3 | |
| 3 | IO_L09N_3/VREF_3 | AP2 | |
| 3 | IO_L09P_3 | AR1 | |
| 3 | IO_L08N_3 | AJ10 | |
| 3 | IO_L08P_3 | AJ11 | |
| 3 | IO_L07N_3 | AT7 | |
| 3 | IO_L07P_3 | AT8 | |
| 3 | IO_L72N_3 | AT3 | |
| 3 | IO_L72P_3 | AT4 | |
| 3 | IO_L71N_3 | AJ12 | |
| 3 | IO_L71P_3 | AK12 | |
| 3 | IO_L70N_3 | AT1 | |
| 3 | IO_L70P_3 | AT2 | |
| 3 | IO_L69N_3/VREF_3 | AT6 | |
| 3 | IO_L69P_3 | AU6 | |
| 3 | IO_L68N_3 | AK10 | |
| 3 | IO_L68P_3 | AK11 | |
| 3 | IO_L67N_3 | AT5 | |

*Table 14:* **FF1696 — XC2VP100**

| Bank | Pin Description | Pin Number | No Connects |
|---|---|---|---|
| | | | XC2VP100 |
| 3 | IO_L67P_3 | AU5 | |
| 3 | IO_L66N_3 | AU1 | |
| 3 | IO_L66P_3 | AU2 | |
| 3 | IO_L65N_3 | AJ9 | |
| 3 | IO_L65P_3 | AK8 | |
| 3 | IO_L64N_3 | AU8 | |
| 3 | IO_L64P_3 | AV8 | |
| 3 | IO_L63N_3/VREF_3 | AU7 | |
| 3 | IO_L63P_3 | AV7 | |
| 3 | IO_L62N_3 | AL8 | |
| 3 | IO_L62P_3 | AL9 | |
| 3 | IO_L61N_3 | AU3 | |
| 3 | IO_L61P_3 | AV2 | |
| 3 | IO_L84N_3 | AV6 | |
| 3 | IO_L84P_3 | AW5 | |
| 3 | IO_L83N_3 | AM8 | |
| 3 | IO_L83P_3 | AM9 | |
| 3 | IO_L82N_3 | AV4 | |
| 3 | IO_L82P_3 | AW4 | |
| 3 | IO_L81N_3/VREF_3 | AV3 | |
| 3 | IO_L81P_3 | AW3 | |
| 3 | IO_L80N_3 | AN9 | |
| 3 | IO_L80P_3 | AP8 | |
| 3 | IO_L79N_3 | AW1 | |
| 3 | IO_L79P_3 | AW2 | |
| 3 | IO_L78N_3 | AY7 | |
| 3 | IO_L78P_3 | AY8 | |
| 3 | IO_L77N_3 | AR8 | |
| 3 | IO_L77P_3 | AR9 | |
| 3 | IO_L76N_3 | AW7 | |
| 3 | IO_L76P_3 | AY6 | |
| 3 | IO_L75N_3/VREF_3 | AY3 | |
| 3 | IO_L75P_3 | AY4 | |
| 3 | IO_L74N_3 | AT9 | |
| 3 | IO_L74P_3 | AU9 | |
| 3 | IO_L73N_3 | AY5 | |
| 3 | IO_L73P_3 | BA5 | |

*Table 14:* **FF1696 — XC2VP100**

| Bank | Pin Description | Pin Number | No Connects XC2VP100 |
|---|---|---|---|
| 3 | IO_L06N_3 | BA8 | |
| 3 | IO_L06P_3 | BB8 | |
| 3 | IO_L05N_3 | AW8 | |
| 3 | IO_L05P_3 | AW9 | |
| 3 | IO_L04N_3 | BA7 | |
| 3 | IO_L04P_3 | BB7 | |
| 3 | IO_L03N_3/VREF_3 | BA6 | |
| 3 | IO_L03P_3 | BB6 | |
| 3 | IO_L02N_3 | AY9 | |
| 3 | IO_L02P_3 | BA9 | |
| 3 | IO_L01N_3/VRP_3 | BA4 | |
| 3 | IO_L01P_3/VRN_3 | BB4 | |
| | | | |
| 4 | IO_L01N_4/BUSY/DOUT(1) | AL11 | |
| 4 | IO_L01P_4/INIT_B | AL12 | |
| 4 | IO_L02N_4/D0/DIN(1) | AV10 | |
| 4 | IO_L02P_4/D1 | AU10 | |
| 4 | IO_L03N_4/D2 | AN11 | |
| 4 | IO_L03P_4/D3 | AM11 | |
| 4 | IO_L05_4/No_Pair | AT10 | |
| 4 | IO_L06N_4/VRP_4 | AY11 | |
| 4 | IO_L06P_4/VRN_4 | AY10 | |
| 4 | IO_L07N_4 | BB10 | |
| 4 | IO_L07P_4/VREF_4 | BA10 | |
| 4 | IO_L08N_4 | AU11 | |
| 4 | IO_L08P_4 | AT11 | |
| 4 | IO_L09N_4 | AR11 | |
| 4 | IO_L09P_4/VREF_4 | AP11 | |
| 4 | IO_L19N_4 | AW11 | |
| 4 | IO_L19P_4 | AV11 | |
| 4 | IO_L20N_4 | BB11 | |
| 4 | IO_L20P_4 | BA11 | |
| 4 | IO_L21N_4 | AN12 | |
| 4 | IO_L21P_4 | AM12 | |
| 4 | IO_L25N_4 | AR13 | |
| 4 | IO_L25P_4 | AT12 | |
| 4 | IO_L26N_4 | AV12 | |

*Table 14:* **FF1696 — XC2VP100**

| Bank | Pin Description | Pin Number | No Connects |
|---|---|---|---|
| | | | XC2VP100 |
| 4 | IO_L26P_4 | AU12 | |
| 4 | IO_L27N_4 | AR12 | |
| 4 | IO_L27P_4/VREF_4 | AP12 | |
| 4 | IO_L28N_4 | AW13 | |
| 4 | IO_L28P_4 | AW12 | |
| 4 | IO_L29N_4 | BA12 | |
| 4 | IO_L29P_4 | AY12 | |
| 4 | IO_L30N_4 | AN13 | |
| 4 | IO_L30P_4 | AM13 | |
| 4 | IO_L34N_4 | AU13 | |
| 4 | IO_L34P_4 | AT13 | |
| 4 | IO_L35N_4 | BA13 | |
| 4 | IO_L35P_4 | AY13 | |
| 4 | IO_L36N_4 | AM14 | |
| 4 | IO_L36P_4/VREF_4 | AL14 | |
| 4 | IO_L76N_4 | AR15 | |
| 4 | IO_L76P_4 | AT14 | |
| 4 | IO_L77N_4 | AV14 | |
| 4 | IO_L77P_4 | AU14 | |
| 4 | IO_L78N_4 | AP14 | |
| 4 | IO_L78P_4 | AN14 | |
| 4 | IO_L79N_4 | AW15 | |
| 4 | IO_L79P_4 | AY14 | |
| 4 | IO_L80_4/No_Pair | BB14 | |
| 4 | IO_L83_4/No_Pair | BA14 | |
| 4 | IO_L84N_4 | AM15 | |
| 4 | IO_L84P_4 | AL15 | |
| 4 | IO_L85N_4 | AT16 | |
| 4 | IO_L85P_4 | AT15 | |
| 4 | IO_L86N_4 | AV15 | |
| 4 | IO_L86P_4 | AU15 | |
| 4 | IO_L87N_4 | AP15 | |
| 4 | IO_L87P_4/VREF_4 | AN15 | |
| 4 | IO_L37N_4 | AY16 | |
| 4 | IO_L37P_4 | AY15 | |
| 4 | IO_L38N_4 | BB15 | |
| 4 | IO_L38P_4 | BA15 | |

*Table 14:* **FF1696 — XC2VP100**

| Bank | Pin Description | Pin Number | No Connects |
|---|---|---|---|
| | | | XC2VP100 |
| 4 | IO_L39N_4 | AM16 | |
| 4 | IO_L39P_4 | AL16 | |
| 4 | IO_L43N_4 | AR17 | |
| 4 | IO_L43P_4 | AR16 | |
| 4 | IO_L44N_4 | AV16 | |
| 4 | IO_L44P_4 | AU16 | |
| 4 | IO_L45N_4 | AP16 | |
| 4 | IO_L45P_4/VREF_4 | AN16 | |
| 4 | IO_L10N_4 | AW17 | NC |
| 4 | IO_L10P_4 | AW16 | NC |
| 4 | IO_L11N_4 | BB16 | NC |
| 4 | IO_L11P_4 | BA16 | NC |
| 4 | IO_L12N_4 | AL18 | NC |
| 4 | IO_L12P_4 | AL17 | NC |
| 4 | IO_L16N_4 | AU17 | NC |
| 4 | IO_L16P_4 | AT17 | NC |
| 4 | IO_L18N_4 | BA17 | NC |
| 4 | IO_L18P_4/VREF_4 | AY17 | NC |
| 4 | IO_L46N_4 | AT19 | |
| 4 | IO_L46P_4 | AT18 | |
| 4 | IO_L47N_4 | AN17 | |
| 4 | IO_L47P_4 | AM17 | |
| 4 | IO_L48N_4 | AV18 | |
| 4 | IO_L48P_4 | AU18 | |
| 4 | IO_L49N_4 | AY19 | |
| 4 | IO_L49P_4 | AY18 | |
| 4 | IO_L50_4/No_Pair | AM19 | |
| 4 | IO_L53_4/No_Pair | AM18 | |
| 4 | IO_L54N_4 | BB18 | |
| 4 | IO_L54P_4 | BA18 | |
| 4 | IO_L55N_4 | AR20 | |
| 4 | IO_L55P_4 | AR19 | |
| 4 | IO_L56N_4 | AP18 | |
| 4 | IO_L56P_4 | AN18 | |
| 4 | IO_L57N_4 | AV19 | |
| 4 | IO_L57P_4/VREF_4 | AU19 | |
| 4 | IO_L58N_4 | AW20 | |

*Table 14:* **FF1696 — XC2VP100**

| Bank | Pin Description | Pin Number | No Connects |
|---|---|---|---|
| | | | XC2VP100 |
| 4 | IO_L58P_4 | AW19 | |
| 4 | IO_L59N_4 | AP19 | |
| 4 | IO_L59P_4 | AN19 | |
| 4 | IO_L60N_4 | BB19 | |
| 4 | IO_L60P_4 | BA19 | |
| 4 | IO_L64N_4 | AU20 | |
| 4 | IO_L64P_4 | AT20 | |
| 4 | IO_L65N_4 | AL21 | |
| 4 | IO_L65P_4 | AL20 | |
| 4 | IO_L66N_4 | BA20 | |
| 4 | IO_L66P_4/VREF_4 | AY20 | |
| 4 | IO_L67N_4 | AR21 | |
| 4 | IO_L67P_4 | AP21 | |
| 4 | IO_L68N_4 | AN20 | |
| 4 | IO_L68P_4 | AM20 | |
| 4 | IO_L69N_4 | AU21 | |
| 4 | IO_L69P_4/VREF_4 | AT21 | |
| 4 | IO_L73N_4 | AW21 | |
| 4 | IO_L73P_4 | AV21 | |
| 4 | IO_L74N_4/GCLK3S | AN21 | |
| 4 | IO_L74P_4/GCLK2P | AM21 | |
| 4 | IO_L75N_4/GCLK1S | BA21 | |
| 4 | IO_L75P_4/GCLK0P | AY21 | |
| | | | |
| 5 | IO_L75N_5/GCLK7S | AY22 | |
| 5 | IO_L75P_5/GCLK6P | BA22 | |
| 5 | IO_L74N_5/GCLK5S | AM22 | |
| 5 | IO_L74P_5/GCLK4P | AN22 | |
| 5 | IO_L73N_5 | AV22 | |
| 5 | IO_L73P_5 | AW22 | |
| 5 | IO_L69N_5/VREF_5 | AT22 | |
| 5 | IO_L69P_5 | AU22 | |
| 5 | IO_L68N_5 | AM23 | |
| 5 | IO_L68P_5 | AN23 | |
| 5 | IO_L67N_5 | AP22 | |
| 5 | IO_L67P_5 | AR22 | |
| 5 | IO_L66N_5/VREF_5 | AY23 | |

*Table 14:* **FF1696 — XC2VP100**

| Bank | Pin Description | Pin Number | No Connects |
|---|---|---|---|
| | | | XC2VP100 |
| 5 | IO_L66P_5 | BA23 | |
| 5 | IO_L65N_5 | AL23 | |
| 5 | IO_L65P_5 | AL22 | |
| 5 | IO_L64N_5 | AT23 | |
| 5 | IO_L64P_5 | AU23 | |
| 5 | IO_L60N_5 | BA24 | |
| 5 | IO_L60P_5 | BB24 | |
| 5 | IO_L59N_5 | AN24 | |
| 5 | IO_L59P_5 | AP24 | |
| 5 | IO_L58N_5 | AW24 | |
| 5 | IO_L58P_5 | AW23 | |
| 5 | IO_L57N_5/VREF_5 | AU24 | |
| 5 | IO_L57P_5 | AV24 | |
| 5 | IO_L56N_5 | AN25 | |
| 5 | IO_L56P_5 | AP25 | |
| 5 | IO_L55N_5 | AR24 | |
| 5 | IO_L55P_5 | AR23 | |
| 5 | IO_L54N_5 | BA25 | |
| 5 | IO_L54P_5 | BB25 | |
| 5 | IO_L53_5/No_Pair | AM25 | |
| 5 | IO_L50_5/No_Pair | AM24 | |
| 5 | IO_L49N_5 | AY25 | |
| 5 | IO_L49P_5 | AY24 | |
| 5 | IO_L48N_5 | AU25 | |
| 5 | IO_L48P_5 | AV25 | |
| 5 | IO_L47N_5 | AM26 | |
| 5 | IO_L47P_5 | AN26 | |
| 5 | IO_L46N_5 | AT25 | |
| 5 | IO_L46P_5 | AT24 | |
| 5 | IO_L18N_5/VREF_5 | AY26 | NC |
| 5 | IO_L18P_5 | BA26 | NC |
| 5 | IO_L16N_5 | AT26 | NC |
| 5 | IO_L16P_5 | AU26 | NC |
| 5 | IO_L12N_5 | AL26 | NC |
| 5 | IO_L12P_5 | AL25 | NC |
| 5 | IO_L11N_5 | BA27 | NC |
| 5 | IO_L11P_5 | BB27 | NC |

*Table 14:* **FF1696 — XC2VP100**

| Bank | Pin Description | Pin Number | No Connects |
|---|---|---|---|
| | | | XC2VP100 |
| 5 | IO_L10N_5 | AW27 | NC |
| 5 | IO_L10P_5 | AW26 | NC |
| 5 | IO_L45N_5/VREF_5 | AN27 | |
| 5 | IO_L45P_5 | AP27 | |
| 5 | IO_L44N_5 | AU27 | |
| 5 | IO_L44P_5 | AV27 | |
| 5 | IO_L43N_5 | AR27 | |
| 5 | IO_L43P_5 | AR26 | |
| 5 | IO_L39N_5 | AL27 | |
| 5 | IO_L39P_5 | AM27 | |
| 5 | IO_L38N_5 | BA28 | |
| 5 | IO_L38P_5 | BB28 | |
| 5 | IO_L37N_5 | AY28 | |
| 5 | IO_L37P_5 | AY27 | |
| 5 | IO_L87N_5/VREF_5 | AN28 | |
| 5 | IO_L87P_5 | AP28 | |
| 5 | IO_L86N_5 | AU28 | |
| 5 | IO_L86P_5 | AV28 | |
| 5 | IO_L85N_5 | AT28 | |
| 5 | IO_L85P_5 | AT27 | |
| 5 | IO_L84N_5 | AL28 | |
| 5 | IO_L84P_5 | AM28 | |
| 5 | IO_L83_5/No_Pair | BA29 | |
| 5 | IO_L80_5/No_Pair | BB29 | |
| 5 | IO_L79N_5 | AY29 | |
| 5 | IO_L79P_5 | AW28 | |
| 5 | IO_L78N_5 | AN29 | |
| 5 | IO_L78P_5 | AP29 | |
| 5 | IO_L77N_5 | AU29 | |
| 5 | IO_L77P_5 | AV29 | |
| 5 | IO_L76N_5 | AT29 | |
| 5 | IO_L76P_5 | AR28 | |
| 5 | IO_L36N_5/VREF_5 | AL29 | |
| 5 | IO_L36P_5 | AM29 | |
| 5 | IO_L35N_5 | AY30 | |
| 5 | IO_L35P_5 | BA30 | |
| 5 | IO_L34N_5 | AT30 | |

*Table 14:* **FF1696 — XC2VP100**

| Bank | Pin Description | Pin Number | No Connects |
|---|---|---|---|
| | | | XC2VP100 |
| 5 | IO_L34P_5 | AU30 | |
| 5 | IO_L30N_5 | AM30 | |
| 5 | IO_L30P_5 | AN30 | |
| 5 | IO_L29N_5 | AY31 | |
| 5 | IO_L29P_5 | BA31 | |
| 5 | IO_L28N_5 | AW31 | |
| 5 | IO_L28P_5 | AW30 | |
| 5 | IO_L27N_5/VREF_5 | AP31 | |
| 5 | IO_L27P_5 | AR31 | |
| 5 | IO_L26N_5 | AU31 | |
| 5 | IO_L26P_5 | AV31 | |
| 5 | IO_L25N_5 | AT31 | |
| 5 | IO_L25P_5 | AR30 | |
| 5 | IO_L21N_5 | AM31 | |
| 5 | IO_L21P_5 | AN31 | |
| 5 | IO_L20N_5 | BA32 | |
| 5 | IO_L20P_5 | BB32 | |
| 5 | IO_L19N_5 | AV32 | |
| 5 | IO_L19P_5 | AW32 | |
| 5 | IO_L09N_5/VREF_5 | AP32 | |
| 5 | IO_L09P_5 | AR32 | |
| 5 | IO_L08N_5 | AT32 | |
| 5 | IO_L08P_5 | AU32 | |
| 5 | IO_L07N_5/VREF_5 | BA33 | |
| 5 | IO_L07P_5 | BB33 | |
| 5 | IO_L06N_5/VRP_5 | AY33 | |
| 5 | IO_L06P_5/VRN_5 | AY32 | |
| 5 | IO_L05_5/No_Pair | AT33 | |
| 5 | IO_L03N_5/D4 | AM32 | |
| 5 | IO_L03P_5/D5 | AN32 | |
| 5 | IO_L02N_5/D6 | AU33 | |
| 5 | IO_L02P_5/D7 | AV33 | |
| 5 | IO_L01N_5/RDWR_B | AL31 | |
| 5 | IO_L01P_5/CS_B | AL32 | |
| | | | |
| 6 | IO_L01P_6/VRN_6 | BB39 | |
| 6 | IO_L01N_6/VRP_6 | BA39 | |

*Table 14:* **FF1696 — XC2VP100**

| Bank | Pin Description | Pin Number | No Connects |
|---|---|---|---|
| | | | XC2VP100 |
| 6 | IO_L02P_6 | BA34 | |
| 6 | IO_L02N_6 | AY34 | |
| 6 | IO_L03P_6 | BB37 | |
| 6 | IO_L03N_6/VREF_6 | BA37 | |
| 6 | IO_L04P_6 | BB36 | |
| 6 | IO_L04N_6 | BA36 | |
| 6 | IO_L05P_6 | AW34 | |
| 6 | IO_L05N_6 | AW35 | |
| 6 | IO_L06P_6 | BB35 | |
| 6 | IO_L06N_6 | BA35 | |
| 6 | IO_L73P_6 | BA38 | |
| 6 | IO_L73N_6 | AY38 | |
| 6 | IO_L74P_6 | AU34 | |
| 6 | IO_L74N_6 | AT34 | |
| 6 | IO_L75P_6 | AY39 | |
| 6 | IO_L75N_6/VREF_6 | AY40 | |
| 6 | IO_L76P_6 | AY37 | |
| 6 | IO_L76N_6 | AW36 | |
| 6 | IO_L77P_6 | AR34 | |
| 6 | IO_L77N_6 | AR35 | |
| 6 | IO_L78P_6 | AY35 | |
| 6 | IO_L78N_6 | AY36 | |
| 6 | IO_L79P_6 | AW41 | |
| 6 | IO_L79N_6 | AW42 | |
| 6 | IO_L80P_6 | AP35 | |
| 6 | IO_L80N_6 | AN34 | |
| 6 | IO_L81P_6 | AW40 | |
| 6 | IO_L81N_6/VREF_6 | AV40 | |
| 6 | IO_L82P_6 | AW39 | |
| 6 | IO_L82N_6 | AV39 | |
| 6 | IO_L83P_6 | AM34 | |
| 6 | IO_L83N_6 | AM35 | |
| 6 | IO_L84P_6 | AW38 | |
| 6 | IO_L84N_6 | AV37 | |
| 6 | IO_L61P_6 | AV41 | |
| 6 | IO_L61N_6 | AU40 | |
| 6 | IO_L62P_6 | AL34 | |

*Table 14:* **FF1696 — XC2VP100**

| Bank | Pin Description | Pin Number | No Connects |
|---|---|---|---|
| | | | XC2VP100 |
| 6 | IO_L62N_6 | AL35 | |
| 6 | IO_L63P_6 | AV36 | |
| 6 | IO_L63N_6/VREF_6 | AU36 | |
| 6 | IO_L64P_6 | AV35 | |
| 6 | IO_L64N_6 | AU35 | |
| 6 | IO_L65P_6 | AK35 | |
| 6 | IO_L65N_6 | AJ34 | |
| 6 | IO_L66P_6 | AU41 | |
| 6 | IO_L66N_6 | AU42 | |
| 6 | IO_L67P_6 | AU38 | |
| 6 | IO_L67N_6 | AT38 | |
| 6 | IO_L68P_6 | AK32 | |
| 6 | IO_L68N_6 | AK33 | |
| 6 | IO_L69P_6 | AU37 | |
| 6 | IO_L69N_6/VREF_6 | AT37 | |
| 6 | IO_L70P_6 | AT41 | |
| 6 | IO_L70N_6 | AT42 | |
| 6 | IO_L71P_6 | AK31 | |
| 6 | IO_L71N_6 | AJ31 | |
| 6 | IO_L72P_6 | AT39 | |
| 6 | IO_L72N_6 | AT40 | |
| 6 | IO_L07P_6 | AT35 | |
| 6 | IO_L07N_6 | AT36 | |
| 6 | IO_L08P_6 | AJ32 | |
| 6 | IO_L08N_6 | AJ33 | |
| 6 | IO_L09P_6 | AR42 | |
| 6 | IO_L09N_6/VREF_6 | AP41 | |
| 6 | IO_L10P_6 | AR40 | |
| 6 | IO_L10N_6 | AR41 | |
| 6 | IO_L11P_6 | AH34 | |
| 6 | IO_L11N_6 | AH35 | |
| 6 | IO_L12P_6 | AR38 | |
| 6 | IO_L12N_6 | AR39 | |
| 6 | IO_L13P_6 | AR36 | |
| 6 | IO_L13N_6 | AR37 | |
| 6 | IO_L14P_6 | AH32 | |
| 6 | IO_L14N_6 | AH33 | |

*Table 14:* **FF1696 — XC2VP100**

| Bank | Pin Description | Pin Number | No Connects |
|---|---|---|---|
| | | | XC2VP100 |
| 6 | IO_L15P_6 | AP39 | |
| 6 | IO_L15N_6/VREF_6 | AP40 | |
| 6 | IO_L16P_6 | AP36 | |
| 6 | IO_L16N_6 | AP37 | |
| 6 | IO_L17P_6 | AH31 | |
| 6 | IO_L17N_6 | AG31 | |
| 6 | IO_L18P_6 | AN41 | |
| 6 | IO_L18N_6 | AN42 | |
| 6 | IO_L19P_6 | AN40 | |
| 6 | IO_L19N_6 | AM40 | |
| 6 | IO_L20P_6 | AG34 | |
| 6 | IO_L20N_6 | AG35 | |
| 6 | IO_L21P_6 | AN37 | |
| 6 | IO_L21N_6/VREF_6 | AN38 | |
| 6 | IO_L22P_6 | AN36 | |
| 6 | IO_L22N_6 | AM36 | |
| 6 | IO_L23P_6 | AG32 | |
| 6 | IO_L23N_6 | AG33 | |
| 6 | IO_L24P_6 | AM41 | |
| 6 | IO_L24N_6 | AM42 | |
| 6 | IO_L25P_6 | AM38 | |
| 6 | IO_L25N_6 | AM39 | |
| 6 | IO_L26P_6 | AF35 | |
| 6 | IO_L26N_6 | AF36 | |
| 6 | IO_L27P_6 | AM37 | |
| 6 | IO_L27N_6/VREF_6 | AL36 | |
| 6 | IO_L28P_6 | AL41 | |
| 6 | IO_L28N_6 | AK41 | |
| 6 | IO_L29P_6 | AF32 | |
| 6 | IO_L29N_6 | AF33 | |
| 6 | IO_L30P_6 | AL39 | |
| 6 | IO_L30N_6 | AL40 | |
| 6 | IO_L31P_6 | AL37 | |
| 6 | IO_L31N_6 | AL38 | |
| 6 | IO_L32P_6 | AF31 | |
| 6 | IO_L32N_6 | AE31 | |
| 6 | IO_L33P_6 | AK39 | |

*Table 14:* **FF1696 — XC2VP100**

| Bank | Pin Description | Pin Number | No Connects |
|---|---|---|---|
| | | | XC2VP100 |
| 6 | IO_L33N_6/VREF_6 | AK40 | |
| 6 | IO_L34P_6 | AK36 | |
| 6 | IO_L34N_6 | AK37 | |
| 6 | IO_L35P_6 | AE36 | |
| 6 | IO_L35N_6 | AE37 | |
| 6 | IO_L36P_6 | AJ41 | |
| 6 | IO_L36N_6 | AJ42 | |
| 6 | IO_L37P_6 | AJ40 | |
| 6 | IO_L37N_6 | AH40 | |
| 6 | IO_L38P_6 | AE34 | |
| 6 | IO_L38N_6 | AE35 | |
| 6 | IO_L39P_6 | AJ38 | |
| 6 | IO_L39N_6/VREF_6 | AH37 | |
| 6 | IO_L40P_6 | AJ36 | |
| 6 | IO_L40N_6 | AJ37 | |
| 6 | IO_L41P_6 | AE32 | |
| 6 | IO_L41N_6 | AE33 | |
| 6 | IO_L42P_6 | AH41 | |
| 6 | IO_L42N_6 | AH42 | |
| 6 | IO_L43P_6 | AH38 | |
| 6 | IO_L43N_6 | AH39 | |
| 6 | IO_L44P_6 | AD36 | |
| 6 | IO_L44N_6 | AC35 | |
| 6 | IO_L45P_6 | AH36 | |
| 6 | IO_L45N_6/VREF_6 | AG36 | |
| 6 | IO_L46P_6 | AG41 | |
| 6 | IO_L46N_6 | AG42 | |
| 6 | IO_L47P_6 | AD34 | |
| 6 | IO_L47N_6 | AC33 | |
| 6 | IO_L48P_6 | AG40 | |
| 6 | IO_L48N_6 | AF39 | |
| 6 | IO_L49P_6 | AG38 | |
| 6 | IO_L49N_6 | AG39 | |
| 6 | IO_L50P_6 | AD32 | |
| 6 | IO_L50N_6 | AD33 | |
| 6 | IO_L51P_6 | AG37 | |
| 6 | IO_L51N_6/VREF_6 | AF37 | |

*Table 14:* **FF1696 — XC2VP100**

| Bank | Pin Description | Pin Number | No Connects XC2VP100 |
|---|---|---|---|
| 6 | IO_L52P_6 | AF40 | |
| 6 | IO_L52N_6 | AF41 | |
| 6 | IO_L53P_6 | AC36 | |
| 6 | IO_L53N_6 | AC37 | |
| 6 | IO_L54P_6 | AE41 | |
| 6 | IO_L54N_6 | AE42 | |
| 6 | IO_L55P_6 | AE40 | |
| 6 | IO_L55N_6 | AD40 | |
| 6 | IO_L56P_6 | AC31 | |
| 6 | IO_L56N_6 | AC32 | |
| 6 | IO_L57P_6 | AE38 | |
| 6 | IO_L57N_6/VREF_6 | AE39 | |
| 6 | IO_L58P_6 | AD41 | |
| 6 | IO_L58N_6 | AD42 | |
| 6 | IO_L59P_6 | AB35 | |
| 6 | IO_L59N_6 | AB36 | |
| 6 | IO_L60P_6 | AD37 | |
| 6 | IO_L60N_6 | AD38 | |
| 6 | IO_L85P_6 | AC40 | |
| 6 | IO_L85N_6 | AC41 | |
| 6 | IO_L86P_6 | AB33 | |
| 6 | IO_L86N_6 | AB34 | |
| 6 | IO_L87P_6 | AC39 | |
| 6 | IO_L87N_6/VREF_6 | AB39 | |
| 6 | IO_L88P_6 | AB40 | |
| 6 | IO_L88N_6 | AB41 | |
| 6 | IO_L89P_6 | AB31 | |
| 6 | IO_L89N_6 | AB32 | |
| 6 | IO_L90P_6 | AB37 | |
| 6 | IO_L90N_6 | AB38 | |
| | | | |
| 7 | IO_L90P_7 | AA40 | |
| 7 | IO_L90N_7 | AA41 | |
| 7 | IO_L89P_7 | AA35 | |
| 7 | IO_L89N_7 | AA36 | |
| 7 | IO_L88P_7 | Y39 | |
| 7 | IO_L88N_7/VREF_7 | AA39 | |

*Table 14:* **FF1696 — XC2VP100**

| Bank | Pin Description | Pin Number | No Connects |
|---|---|---|---|
| | | | XC2VP100 |
| 7 | IO_L87P_7 | AA37 | |
| 7 | IO_L87N_7 | AA38 | |
| 7 | IO_L86P_7 | AA33 | |
| 7 | IO_L86N_7 | AA34 | |
| 7 | IO_L85P_7 | Y40 | |
| 7 | IO_L85N_7 | Y41 | |
| 7 | IO_L60P_7 | W41 | |
| 7 | IO_L60N_7 | W42 | |
| 7 | IO_L59P_7 | AA31 | |
| 7 | IO_L59N_7 | AA32 | |
| 7 | IO_L58P_7 | V40 | |
| 7 | IO_L58N_7/VREF_7 | W40 | |
| 7 | IO_L57P_7 | W37 | |
| 7 | IO_L57N_7 | W38 | |
| 7 | IO_L56P_7 | Y36 | |
| 7 | IO_L56N_7 | Y37 | |
| 7 | IO_L55P_7 | V41 | |
| 7 | IO_L55N_7 | V42 | |
| 7 | IO_L54P_7 | V38 | |
| 7 | IO_L54N_7 | V39 | |
| 7 | IO_L53P_7 | Y31 | |
| 7 | IO_L53N_7 | Y32 | |
| 7 | IO_L52P_7 | U40 | |
| 7 | IO_L52N_7/VREF_7 | U41 | |
| 7 | IO_L51P_7 | T40 | |
| 7 | IO_L51N_7 | U39 | |
| 7 | IO_L50P_7 | Y35 | |
| 7 | IO_L50N_7 | W36 | |
| 7 | IO_L49P_7 | T37 | |
| 7 | IO_L49N_7 | U37 | |
| 7 | IO_L48P_7 | T41 | |
| 7 | IO_L48N_7 | T42 | |
| 7 | IO_L47P_7 | Y33 | |
| 7 | IO_L47N_7 | W34 | |
| 7 | IO_L46P_7 | T38 | |
| 7 | IO_L46N_7/VREF_7 | T39 | |
| 7 | IO_L45P_7 | R36 | |

*Table 14:* **FF1696 — XC2VP100**

| Bank | Pin Description | Pin Number | No Connects |
|---|---|---|---|
| | | | XC2VP100 |
| 7 | IO_L45N_7 | T36 | |
| 7 | IO_L44P_7 | W32 | |
| 7 | IO_L44N_7 | W33 | |
| 7 | IO_L43P_7 | R41 | |
| 7 | IO_L43N_7 | R42 | |
| 7 | IO_L42P_7 | P40 | |
| 7 | IO_L42N_7 | R40 | |
| 7 | IO_L41P_7 | V36 | |
| 7 | IO_L41N_7 | V37 | |
| 7 | IO_L40P_7 | R38 | |
| 7 | IO_L40N_7/VREF_7 | R39 | |
| 7 | IO_L39P_7 | P38 | |
| 7 | IO_L39N_7 | R37 | |
| 7 | IO_L38P_7 | V34 | |
| 7 | IO_L38N_7 | V35 | |
| 7 | IO_L37P_7 | P41 | |
| 7 | IO_L37N_7 | P42 | |
| 7 | IO_L36P_7 | P36 | |
| 7 | IO_L36N_7 | P37 | |
| 7 | IO_L35P_7 | V32 | |
| 7 | IO_L35N_7 | V33 | |
| 7 | IO_L34P_7 | M41 | |
| 7 | IO_L34N_7/VREF_7 | N41 | |
| 7 | IO_L33P_7 | N39 | |
| 7 | IO_L33N_7 | N40 | |
| 7 | IO_L32P_7 | U35 | |
| 7 | IO_L32N_7 | U36 | |
| 7 | IO_L31P_7 | N36 | |
| 7 | IO_L31N_7 | N37 | |
| 7 | IO_L30P_7 | M39 | |
| 7 | IO_L30N_7 | M40 | |
| 7 | IO_L29P_7 | U32 | |
| 7 | IO_L29N_7 | U33 | |
| 7 | IO_L28P_7 | M37 | |
| 7 | IO_L28N_7/VREF_7 | M38 | |
| 7 | IO_L27P_7 | L37 | |
| 7 | IO_L27N_7 | M36 | |

*Table 14:* **FF1696 — XC2VP100**

| Bank | Pin Description | Pin Number | No Connects |
|---|---|---|---|
| | | | XC2VP100 |
| 7 | IO_L26P_7 | V31 | |
| 7 | IO_L26N_7 | U31 | |
| 7 | IO_L25P_7 | L41 | |
| 7 | IO_L25N_7 | L42 | |
| 7 | IO_L24P_7 | K40 | |
| 7 | IO_L24N_7 | L40 | |
| 7 | IO_L23P_7 | T34 | |
| 7 | IO_L23N_7 | T35 | |
| 7 | IO_L22P_7 | L38 | |
| 7 | IO_L22N_7/VREF_7 | L39 | |
| 7 | IO_L21P_7 | K36 | |
| 7 | IO_L21N_7 | L36 | |
| 7 | IO_L20P_7 | T32 | |
| 7 | IO_L20N_7 | T33 | |
| 7 | IO_L19P_7 | K41 | |
| 7 | IO_L19N_7 | K42 | |
| 7 | IO_L18P_7 | K37 | |
| 7 | IO_L18N_7 | K38 | |
| 7 | IO_L17P_7 | R34 | |
| 7 | IO_L17N_7 | R35 | |
| 7 | IO_L16P_7 | H42 | |
| 7 | IO_L16N_7/VREF_7 | J41 | |
| 7 | IO_L15P_7 | J39 | |
| 7 | IO_L15N_7 | J40 | |
| 7 | IO_L14P_7 | R32 | |
| 7 | IO_L14N_7 | R33 | |
| 7 | IO_L13P_7 | J36 | |
| 7 | IO_L13N_7 | J37 | |
| 7 | IO_L12P_7 | H40 | |
| 7 | IO_L12N_7 | H41 | |
| 7 | IO_L11P_7 | T31 | |
| 7 | IO_L11N_7 | R31 | |
| 7 | IO_L10P_7 | H38 | |
| 7 | IO_L10N_7/VREF_7 | H39 | |
| 7 | IO_L09P_7 | H36 | |
| 7 | IO_L09N_7 | H37 | |
| 7 | IO_L08P_7 | P34 | |

*Table 14:* **FF1696 — XC2VP100**

| Bank | Pin Description | Pin Number | No Connects |
|---|---|---|---|
| | | | XC2VP100 |
| 7 | IO_L08N_7 | N35 | |
| 7 | IO_L07P_7 | G41 | |
| 7 | IO_L07N_7 | G42 | |
| 7 | IO_L72P_7 | G39 | |
| 7 | IO_L72N_7 | G40 | |
| 7 | IO_L71P_7 | P32 | |
| 7 | IO_L71N_7 | P33 | |
| 7 | IO_L70P_7 | F38 | |
| 7 | IO_L70N_7/VREF_7 | G38 | |
| 7 | IO_L69P_7 | F37 | |
| 7 | IO_L69N_7 | G37 | |
| 7 | IO_L68P_7 | N32 | |
| 7 | IO_L68N_7 | N33 | |
| 7 | IO_L67P_7 | G35 | |
| 7 | IO_L67N_7 | G36 | |
| 7 | IO_L66P_7 | F41 | |
| 7 | IO_L66N_7 | F42 | |
| 7 | IO_L65P_7 | P31 | |
| 7 | IO_L65N_7 | N31 | |
| 7 | IO_L64P_7 | E41 | |
| 7 | IO_L64N_7/VREF_7 | F40 | |
| 7 | IO_L63P_7 | E36 | |
| 7 | IO_L63N_7 | F36 | |
| 7 | IO_L62P_7 | M34 | |
| 7 | IO_L62N_7 | M35 | |
| 7 | IO_L61P_7 | E35 | |
| 7 | IO_L61N_7 | F35 | |
| 7 | IO_L84P_7 | D40 | |
| 7 | IO_L84N_7 | E40 | |
| 7 | IO_L83P_7 | L34 | |
| 7 | IO_L83N_7 | L35 | |
| 7 | IO_L82P_7 | D39 | |
| 7 | IO_L82N_7/VREF_7 | E39 | |
| 7 | IO_L81P_7 | D38 | |
| 7 | IO_L81N_7 | E37 | |
| 7 | IO_L80P_7 | K34 | |
| 7 | IO_L80N_7 | J35 | |

*Table 14:* **FF1696 — XC2VP100**

| Bank | Pin Description | Pin Number | No Connects |
|---|---|---|---|
| | | | XC2VP100 |
| 7 | IO_L79P_7 | D41 | |
| 7 | IO_L79N_7 | D42 | |
| 7 | IO_L78P_7 | C39 | |
| 7 | IO_L78N_7 | C40 | |
| 7 | IO_L77P_7 | H34 | |
| 7 | IO_L77N_7 | H35 | |
| 7 | IO_L76P_7 | C37 | |
| 7 | IO_L76N_7/VREF_7 | D36 | |
| 7 | IO_L75P_7 | B38 | |
| 7 | IO_L75N_7 | C38 | |
| 7 | IO_L74P_7 | F34 | |
| 7 | IO_L74N_7 | G34 | |
| 7 | IO_L73P_7 | C35 | |
| 7 | IO_L73N_7 | C36 | |
| 7 | IO_L06P_7 | A39 | |
| 7 | IO_L06N_7 | B39 | |
| 7 | IO_L05P_7 | D34 | |
| 7 | IO_L05N_7 | D35 | |
| 7 | IO_L04P_7 | A37 | |
| 7 | IO_L04N_7/VREF_7 | B37 | |
| 7 | IO_L03P_7 | A36 | |
| 7 | IO_L03N_7 | B36 | |
| 7 | IO_L02P_7 | B34 | |
| 7 | IO_L02N_7 | C34 | |
| 7 | IO_L01P_7/VRN_7 | A35 | |
| 7 | IO_L01N_7/VRP_7 | B35 | |
| | | | |
| 7 | VCCO_7 | W39 | |
| 7 | VCCO_7 | P39 | |
| 7 | VCCO_7 | K39 | |
| 7 | VCCO_7 | F39 | |
| 7 | VCCO_7 | D37 | |
| 7 | VCCO_7 | W35 | |
| 7 | VCCO_7 | P35 | |
| 7 | VCCO_7 | K35 | |
| 7 | VCCO_7 | M33 | |
| 7 | VCCO_7 | H33 | |

*Table 14:* **FF1696 — XC2VP100**

| Bank | Pin Description | Pin Number | No Connects |
|---|---|---|---|
| | | | XC2VP100 |
| 7 | VCCO_7 | AA29 | |
| 7 | VCCO_7 | Y29 | |
| 7 | VCCO_7 | W29 | |
| 7 | VCCO_7 | V29 | |
| 7 | VCCO_7 | U29 | |
| 7 | VCCO_7 | T29 | |
| 7 | VCCO_7 | R29 | |
| 7 | VCCO_7 | AA28 | |
| 7 | VCCO_7 | Y28 | |
| 7 | VCCO_7 | W28 | |
| 7 | VCCO_7 | V28 | |
| 7 | VCCO_7 | U28 | |
| 7 | VCCO_7 | T28 | |
| 6 | VCCO_6 | AU39 | |
| 6 | VCCO_6 | AN39 | |
| 6 | VCCO_6 | AJ39 | |
| 6 | VCCO_6 | AD39 | |
| 6 | VCCO_6 | AW37 | |
| 6 | VCCO_6 | AN35 | |
| 6 | VCCO_6 | AJ35 | |
| 6 | VCCO_6 | AD35 | |
| 6 | VCCO_6 | AR33 | |
| 6 | VCCO_6 | AL33 | |
| 6 | VCCO_6 | AH29 | |
| 6 | VCCO_6 | AG29 | |
| 6 | VCCO_6 | AF29 | |
| 6 | VCCO_6 | AE29 | |
| 6 | VCCO_6 | AD29 | |
| 6 | VCCO_6 | AC29 | |
| 6 | VCCO_6 | AB29 | |
| 6 | VCCO_6 | AG28 | |
| 6 | VCCO_6 | AF28 | |
| 6 | VCCO_6 | AE28 | |
| 6 | VCCO_6 | AD28 | |
| 6 | VCCO_6 | AC28 | |
| 6 | VCCO_6 | AB28 | |
| 5 | VCCO_5 | AW33 | |

*Table 14:* **FF1696 — XC2VP100**

| Bank | Pin Description | Pin Number | No Connects XC2VP100 |
|---|---|---|---|
| 5 | VCCO_5 | AL30 | |
| 5 | VCCO_5 | AW29 | |
| 5 | VCCO_5 | AR29 | |
| 5 | VCCO_5 | AJ26 | |
| 5 | VCCO_5 | AW25 | |
| 5 | VCCO_5 | AR25 | |
| 5 | VCCO_5 | AJ25 | |
| 5 | VCCO_5 | AH25 | |
| 5 | VCCO_5 | AJ24 | |
| 5 | VCCO_5 | AH24 | |
| 5 | VCCO_5 | AJ23 | |
| 5 | VCCO_5 | AH23 | |
| 5 | VCCO_5 | AJ22 | |
| 5 | VCCO_5 | AH22 | |
| 4 | VCCO_4 | AJ21 | |
| 4 | VCCO_4 | AH21 | |
| 4 | VCCO_4 | AJ20 | |
| 4 | VCCO_4 | AH20 | |
| 4 | VCCO_4 | AJ19 | |
| 4 | VCCO_4 | AH19 | |
| 4 | VCCO_4 | AW18 | |
| 4 | VCCO_4 | AR18 | |
| 4 | VCCO_4 | AJ18 | |
| 4 | VCCO_4 | AH18 | |
| 4 | VCCO_4 | AJ17 | |
| 4 | VCCO_4 | AW14 | |
| 4 | VCCO_4 | AR14 | |
| 4 | VCCO_4 | AL13 | |
| 4 | VCCO_4 | AW10 | |
| 3 | VCCO_3 | AG15 | |
| 3 | VCCO_3 | AF15 | |
| 3 | VCCO_3 | AE15 | |
| 3 | VCCO_3 | AD15 | |
| 3 | VCCO_3 | AC15 | |
| 3 | VCCO_3 | AB15 | |
| 3 | VCCO_3 | AH14 | |
| 3 | VCCO_3 | AG14 | |

*Table 14:* **FF1696 — XC2VP100**

| Bank | Pin Description | Pin Number | No Connects |
|---|---|---|---|
| | | | XC2VP100 |
| 3 | VCCO_3 | AF14 | |
| 3 | VCCO_3 | AE14 | |
| 3 | VCCO_3 | AD14 | |
| 3 | VCCO_3 | AC14 | |
| 3 | VCCO_3 | AB14 | |
| 3 | VCCO_3 | AR10 | |
| 3 | VCCO_3 | AL10 | |
| 3 | VCCO_3 | AN8 | |
| 3 | VCCO_3 | AJ8 | |
| 3 | VCCO_3 | AD8 | |
| 3 | VCCO_3 | AW6 | |
| 3 | VCCO_3 | AU4 | |
| 3 | VCCO_3 | AN4 | |
| 3 | VCCO_3 | AJ4 | |
| 3 | VCCO_3 | AD4 | |
| 2 | VCCO_2 | AA15 | |
| 2 | VCCO_2 | Y15 | |
| 2 | VCCO_2 | W15 | |
| 2 | VCCO_2 | V15 | |
| 2 | VCCO_2 | U15 | |
| 2 | VCCO_2 | T15 | |
| 2 | VCCO_2 | AA14 | |
| 2 | VCCO_2 | Y14 | |
| 2 | VCCO_2 | W14 | |
| 2 | VCCO_2 | V14 | |
| 2 | VCCO_2 | U14 | |
| 2 | VCCO_2 | T14 | |
| 2 | VCCO_2 | R14 | |
| 2 | VCCO_2 | M10 | |
| 2 | VCCO_2 | H10 | |
| 2 | VCCO_2 | W8 | |
| 2 | VCCO_2 | P8 | |
| 2 | VCCO_2 | K8 | |
| 2 | VCCO_2 | D6 | |
| 2 | VCCO_2 | W4 | |
| 2 | VCCO_2 | P4 | |
| 2 | VCCO_2 | K4 | |

*Table 14:* **FF1696 — XC2VP100**

| Bank | Pin Description | Pin Number | No Connects |
|---|---|---|---|
| | | | XC2VP100 |
| 2 | VCCO_2 | F4 | |
| 1 | VCCO_1 | R21 | |
| 1 | VCCO_1 | P21 | |
| 1 | VCCO_1 | R20 | |
| 1 | VCCO_1 | P20 | |
| 1 | VCCO_1 | R19 | |
| 1 | VCCO_1 | P19 | |
| 1 | VCCO_1 | R18 | |
| 1 | VCCO_1 | P18 | |
| 1 | VCCO_1 | H18 | |
| 1 | VCCO_1 | D18 | |
| 1 | VCCO_1 | P17 | |
| 1 | VCCO_1 | H14 | |
| 1 | VCCO_1 | D14 | |
| 1 | VCCO_1 | M13 | |
| 1 | VCCO_1 | D10 | |
| 0 | VCCO_0 | D33 | |
| 0 | VCCO_0 | M30 | |
| 0 | VCCO_0 | H29 | |
| 0 | VCCO_0 | D29 | |
| 0 | VCCO_0 | P26 | |
| 0 | VCCO_0 | R25 | |
| 0 | VCCO_0 | P25 | |
| 0 | VCCO_0 | H25 | |
| 0 | VCCO_0 | D25 | |
| 0 | VCCO_0 | R24 | |
| 0 | VCCO_0 | P24 | |
| 0 | VCCO_0 | R23 | |
| 0 | VCCO_0 | P23 | |
| 0 | VCCO_0 | R22 | |
| 0 | VCCO_0 | P22 | |
| | | | |
| N/A | CCLK | AM10 | |
| N/A | PROG_B | J33 | |
| N/A | DONE | AN10 | |
| N/A | M0 | AP33 | |
| N/A | M1 | AN33 | |

*Table 14:* **FF1696 — XC2VP100**

| Bank | Pin Description | Pin Number | No Connects |
|---|---|---|---|
| | | | XC2VP100 |
| N/A | M2 | AM33 | |
| N/A | TCK | K10 | |
| N/A | TDI | M32 | |
| N/A | TDO | M11 | |
| N/A | TMS | L10 | |
| N/A | PWRDWN_B | AP10 | |
| N/A | HSWAP_EN | K33 | |
| N/A | RSVD | J10 | |
| N/A | VBATT | M12 | |
| N/A | DXP | M31 | |
| N/A | DXN | L33 | |
| | | | |
| N/A | VCCINT | AK30 | |
| N/A | VCCINT | N30 | |
| N/A | VCCINT | AJ29 | |
| N/A | VCCINT | P29 | |
| N/A | VCCINT | AJ28 | |
| N/A | VCCINT | AH28 | |
| N/A | VCCINT | R28 | |
| N/A | VCCINT | P28 | |
| N/A | VCCINT | AJ27 | |
| N/A | VCCINT | AH27 | |
| N/A | VCCINT | AG27 | |
| N/A | VCCINT | AF27 | |
| N/A | VCCINT | AE27 | |
| N/A | VCCINT | AD27 | |
| N/A | VCCINT | AC27 | |
| N/A | VCCINT | AB27 | |
| N/A | VCCINT | AA27 | |
| N/A | VCCINT | Y27 | |
| N/A | VCCINT | W27 | |
| N/A | VCCINT | V27 | |
| N/A | VCCINT | U27 | |
| N/A | VCCINT | T27 | |
| N/A | VCCINT | R27 | |
| N/A | VCCINT | P27 | |
| N/A | VCCINT | AH26 | |

*Table 14:* **FF1696 — XC2VP100**

| Bank | Pin Description | Pin Number | No Connects |
|---|---|---|---|
| | | | XC2VP100 |
| N/A | VCCINT | AG26 | |
| N/A | VCCINT | AF26 | |
| N/A | VCCINT | U26 | |
| N/A | VCCINT | T26 | |
| N/A | VCCINT | R26 | |
| N/A | VCCINT | AG25 | |
| N/A | VCCINT | T25 | |
| N/A | VCCINT | AG24 | |
| N/A | VCCINT | T24 | |
| N/A | VCCINT | AG23 | |
| N/A | VCCINT | T23 | |
| N/A | VCCINT | AG22 | |
| N/A | VCCINT | T22 | |
| N/A | VCCINT | AG21 | |
| N/A | VCCINT | T21 | |
| N/A | VCCINT | AG20 | |
| N/A | VCCINT | T20 | |
| N/A | VCCINT | AG19 | |
| N/A | VCCINT | T19 | |
| N/A | VCCINT | AG18 | |
| N/A | VCCINT | T18 | |
| N/A | VCCINT | AH17 | |
| N/A | VCCINT | AG17 | |
| N/A | VCCINT | AF17 | |
| N/A | VCCINT | U17 | |
| N/A | VCCINT | T17 | |
| N/A | VCCINT | R17 | |
| N/A | VCCINT | AJ16 | |
| N/A | VCCINT | AH16 | |
| N/A | VCCINT | AG16 | |
| N/A | VCCINT | AF16 | |
| N/A | VCCINT | AE16 | |
| N/A | VCCINT | AD16 | |
| N/A | VCCINT | AC16 | |
| N/A | VCCINT | AB16 | |
| N/A | VCCINT | AA16 | |
| N/A | VCCINT | Y16 | |

*Table 14:* **FF1696 — XC2VP100**

| Bank | Pin Description | Pin Number | No Connects |
|---|---|---|---|
| | | | XC2VP100 |
| N/A | VCCINT | W16 | |
| N/A | VCCINT | V16 | |
| N/A | VCCINT | U16 | |
| N/A | VCCINT | T16 | |
| N/A | VCCINT | R16 | |
| N/A | VCCINT | P16 | |
| N/A | VCCINT | AJ15 | |
| N/A | VCCINT | AH15 | |
| N/A | VCCINT | R15 | |
| N/A | VCCINT | P15 | |
| N/A | VCCINT | AJ14 | |
| N/A | VCCINT | P14 | |
| N/A | VCCINT | AK13 | |
| N/A | VCCINT | N13 | |
| N/A | VCCAUX | BA42 | |
| N/A | VCCAUX | AY42 | |
| N/A | VCCAUX | AL42 | |
| N/A | VCCAUX | AB42 | |
| N/A | VCCAUX | AA42 | |
| N/A | VCCAUX | M42 | |
| N/A | VCCAUX | C42 | |
| N/A | VCCAUX | B42 | |
| N/A | VCCAUX | BB41 | |
| N/A | VCCAUX | A41 | |
| N/A | VCCAUX | BB40 | |
| N/A | VCCAUX | A40 | |
| N/A | VCCAUX | BB31 | |
| N/A | VCCAUX | A31 | |
| N/A | VCCAUX | BB22 | |
| N/A | VCCAUX | A22 | |
| N/A | VCCAUX | BB21 | |
| N/A | VCCAUX | A21 | |
| N/A | VCCAUX | BB12 | |
| N/A | VCCAUX | A12 | |
| N/A | VCCAUX | BB3 | |
| N/A | VCCAUX | A3 | |
| N/A | VCCAUX | BB2 | |

*Table 14:* **FF1696 — XC2VP100**

| Bank | Pin Description | Pin Number | No Connects |
|---|---|---|---|
| | | | XC2VP100 |
| N/A | VCCAUX | A2 | |
| N/A | VCCAUX | BA1 | |
| N/A | VCCAUX | AY1 | |
| N/A | VCCAUX | AL1 | |
| N/A | VCCAUX | AB1 | |
| N/A | VCCAUX | AA1 | |
| N/A | VCCAUX | M1 | |
| N/A | VCCAUX | C1 | |
| N/A | VCCAUX | B1 | |
| N/A | GND | AV42 | |
| N/A | GND | AP42 | |
| N/A | GND | AK42 | |
| N/A | GND | AF42 | |
| N/A | GND | AC42 | |
| N/A | GND | Y42 | |
| N/A | GND | U42 | |
| N/A | GND | N42 | |
| N/A | GND | J42 | |
| N/A | GND | E42 | |
| N/A | GND | BA41 | |
| N/A | GND | AY41 | |
| N/A | GND | C41 | |
| N/A | GND | B41 | |
| N/A | GND | BA40 | |
| N/A | GND | B40 | |
| N/A | GND | BB38 | |
| N/A | GND | AV38 | |
| N/A | GND | AP38 | |
| N/A | GND | AK38 | |
| N/A | GND | AF38 | |
| N/A | GND | AC38 | |
| N/A | GND | Y38 | |
| N/A | GND | U38 | |
| N/A | GND | N38 | |
| N/A | GND | J38 | |
| N/A | GND | E38 | |
| N/A | GND | A38 | |

*Table 14:* **FF1696 — XC2VP100**

| Bank | Pin Description | Pin Number | No Connects |
|---|---|---|---|
| | | | XC2VP100 |
| N/A | GND | BB34 | |
| N/A | GND | AV34 | |
| N/A | GND | AP34 | |
| N/A | GND | AK34 | |
| N/A | GND | AF34 | |
| N/A | GND | AC34 | |
| N/A | GND | Y34 | |
| N/A | GND | U34 | |
| N/A | GND | N34 | |
| N/A | GND | J34 | |
| N/A | GND | E34 | |
| N/A | GND | A34 | |
| N/A | GND | AD31 | |
| N/A | GND | W31 | |
| N/A | GND | BB30 | |
| N/A | GND | AV30 | |
| N/A | GND | AP30 | |
| N/A | GND | J30 | |
| N/A | GND | E30 | |
| N/A | GND | A30 | |
| N/A | GND | BB26 | |
| N/A | GND | AV26 | |
| N/A | GND | AP26 | |
| N/A | GND | AE26 | |
| N/A | GND | AD26 | |
| N/A | GND | AC26 | |
| N/A | GND | AB26 | |
| N/A | GND | AA26 | |
| N/A | GND | Y26 | |
| N/A | GND | W26 | |
| N/A | GND | V26 | |
| N/A | GND | J26 | |
| N/A | GND | E26 | |
| N/A | GND | A26 | |
| N/A | GND | AF25 | |
| N/A | GND | AE25 | |
| N/A | GND | AD25 | |

*Table 14:* **FF1696 — XC2VP100**

| Bank | Pin Description | Pin Number | No Connects |
|---|---|---|---|
| | | | XC2VP100 |
| N/A | GND | AC25 | |
| N/A | GND | AB25 | |
| N/A | GND | AA25 | |
| N/A | GND | Y25 | |
| N/A | GND | W25 | |
| N/A | GND | V25 | |
| N/A | GND | U25 | |
| N/A | GND | AL24 | |
| N/A | GND | AF24 | |
| N/A | GND | AE24 | |
| N/A | GND | AD24 | |
| N/A | GND | AC24 | |
| N/A | GND | AB24 | |
| N/A | GND | AA24 | |
| N/A | GND | Y24 | |
| N/A | GND | W24 | |
| N/A | GND | V24 | |
| N/A | GND | U24 | |
| N/A | GND | M24 | |
| N/A | GND | BB23 | |
| N/A | GND | AV23 | |
| N/A | GND | AP23 | |
| N/A | GND | AF23 | |
| N/A | GND | AE23 | |
| N/A | GND | AD23 | |
| N/A | GND | AC23 | |
| N/A | GND | AB23 | |
| N/A | GND | AA23 | |
| N/A | GND | Y23 | |
| N/A | GND | W23 | |
| N/A | GND | V23 | |
| N/A | GND | U23 | |
| N/A | GND | J23 | |
| N/A | GND | E23 | |
| N/A | GND | A23 | |
| N/A | GND | AF22 | |
| N/A | GND | AE22 | |

*Table 14:* **FF1696 — XC2VP100**

| Bank | Pin Description | Pin Number | No Connects |
|---|---|---|---|
| | | | XC2VP100 |
| N/A | GND | AD22 | |
| N/A | GND | AC22 | |
| N/A | GND | AB22 | |
| N/A | GND | AA22 | |
| N/A | GND | Y22 | |
| N/A | GND | W22 | |
| N/A | GND | V22 | |
| N/A | GND | U22 | |
| N/A | GND | AF21 | |
| N/A | GND | AE21 | |
| N/A | GND | AD21 | |
| N/A | GND | AC21 | |
| N/A | GND | AB21 | |
| N/A | GND | AA21 | |
| N/A | GND | Y21 | |
| N/A | GND | W21 | |
| N/A | GND | V21 | |
| N/A | GND | U21 | |
| N/A | GND | BB20 | |
| N/A | GND | AV20 | |
| N/A | GND | AP20 | |
| N/A | GND | AF20 | |
| N/A | GND | AE20 | |
| N/A | GND | AD20 | |
| N/A | GND | AC20 | |
| N/A | GND | AB20 | |
| N/A | GND | AA20 | |
| N/A | GND | Y20 | |
| N/A | GND | W20 | |
| N/A | GND | V20 | |
| N/A | GND | U20 | |
| N/A | GND | J20 | |
| N/A | GND | E20 | |
| N/A | GND | A20 | |
| N/A | GND | AL19 | |
| N/A | GND | AF19 | |
| N/A | GND | AE19 | |

*Table 14:* **FF1696 — XC2VP100**

| Bank | Pin Description | Pin Number | No Connects XC2VP100 |
|---|---|---|---|
| N/A | GND | AD19 | |
| N/A | GND | AC19 | |
| N/A | GND | AB19 | |
| N/A | GND | AA19 | |
| N/A | GND | Y19 | |
| N/A | GND | W19 | |
| N/A | GND | V19 | |
| N/A | GND | U19 | |
| N/A | GND | M19 | |
| N/A | GND | AF18 | |
| N/A | GND | AE18 | |
| N/A | GND | AD18 | |
| N/A | GND | AC18 | |
| N/A | GND | AB18 | |
| N/A | GND | AA18 | |
| N/A | GND | Y18 | |
| N/A | GND | W18 | |
| N/A | GND | V18 | |
| N/A | GND | U18 | |
| N/A | GND | BB17 | |
| N/A | GND | AV17 | |
| N/A | GND | AP17 | |
| N/A | GND | AE17 | |
| N/A | GND | AD17 | |
| N/A | GND | AC17 | |
| N/A | GND | AB17 | |
| N/A | GND | AA17 | |
| N/A | GND | Y17 | |
| N/A | GND | W17 | |
| N/A | GND | V17 | |
| N/A | GND | J17 | |
| N/A | GND | E17 | |
| N/A | GND | A17 | |
| N/A | GND | BB13 | |
| N/A | GND | AV13 | |
| N/A | GND | AP13 | |
| N/A | GND | J13 | |

*Table 14:* **FF1696 — XC2VP100**

| Bank | Pin Description | Pin Number | No Connects |
|---|---|---|---|
| | | | XC2VP100 |
| N/A | GND | E13 | |
| N/A | GND | A13 | |
| N/A | GND | AD12 | |
| N/A | GND | W12 | |
| N/A | GND | BB9 | |
| N/A | GND | AV9 | |
| N/A | GND | AP9 | |
| N/A | GND | AK9 | |
| N/A | GND | AF9 | |
| N/A | GND | AC9 | |
| N/A | GND | Y9 | |
| N/A | GND | U9 | |
| N/A | GND | N9 | |
| N/A | GND | J9 | |
| N/A | GND | E9 | |
| N/A | GND | A9 | |
| N/A | GND | BB5 | |
| N/A | GND | AV5 | |
| N/A | GND | AP5 | |
| N/A | GND | AK5 | |
| N/A | GND | AF5 | |
| N/A | GND | AC5 | |
| N/A | GND | Y5 | |
| N/A | GND | U5 | |
| N/A | GND | N5 | |
| N/A | GND | J5 | |
| N/A | GND | E5 | |
| N/A | GND | A5 | |
| N/A | GND | BA3 | |
| N/A | GND | B3 | |
| N/A | GND | BA2 | |
| N/A | GND | AY2 | |
| N/A | GND | C2 | |
| N/A | GND | B2 | |
| N/A | GND | AV1 | |
| N/A | GND | AP1 | |
| N/A | GND | AK1 | |

*Table 14:* **FF1696 — XC2VP100**

| Bank | Pin Description | Pin Number | No Connects |
|---|---|---|---|
| | | | XC2VP100 |
| N/A | GND | AF1 | |
| N/A | GND | AC1 | |
| N/A | GND | Y1 | |
| N/A | GND | U1 | |
| N/A | GND | N1 | |
| N/A | GND | J1 | |
| N/A | GND | E1 | |

**Notes:**
1. See Table 4 for an explanation of the signals available on this pin.

## FF1696 Flip-Chip Fine-Pitch BGA Package Specifications (1.00mm pitch)

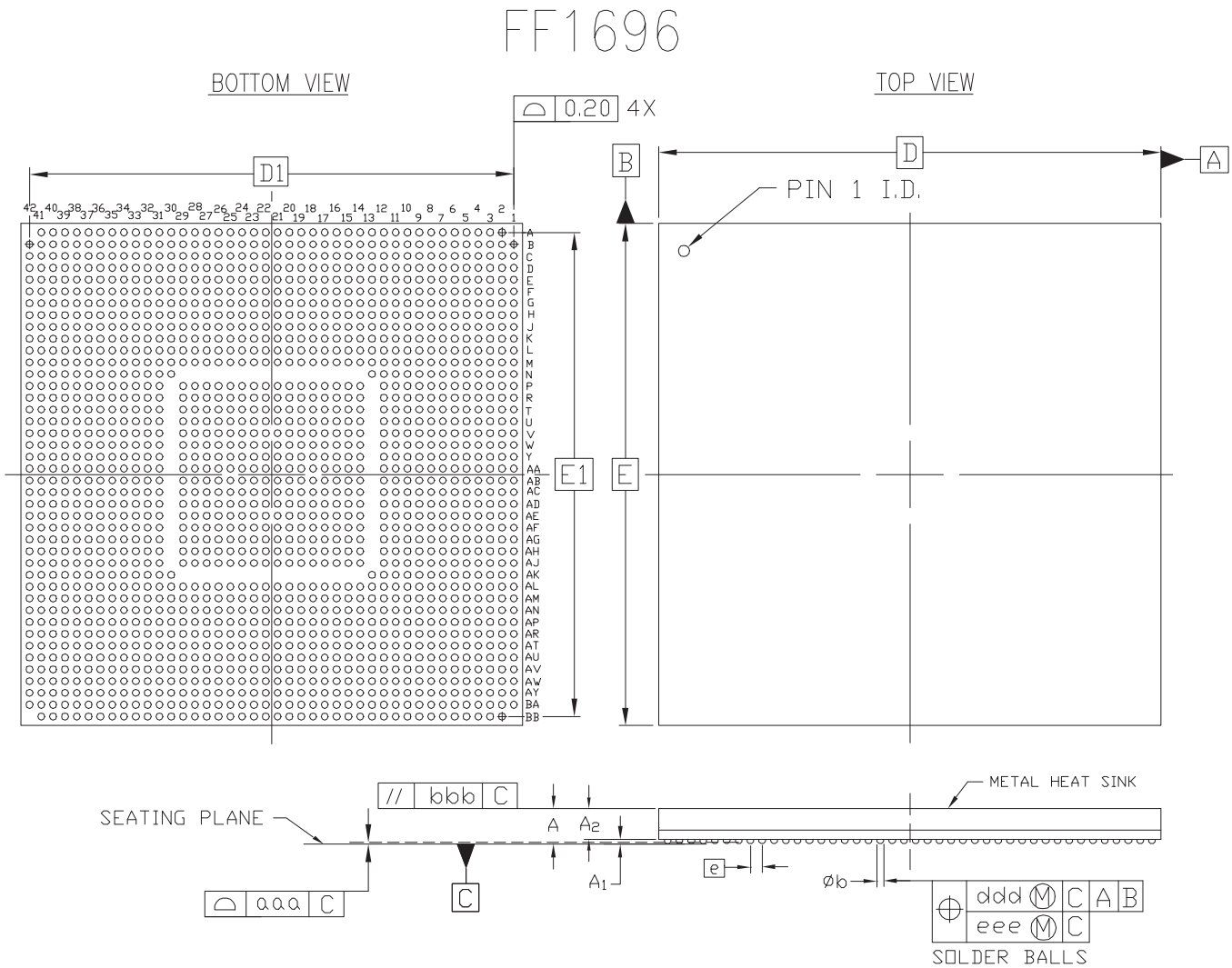


| SYMBOL | MILLIMETERS MIN. | NOM. | MAX. | NOTE |
|---|---|---|---|---|
| A | — | 3.20 | 3.45 | |
| $A_1$ | 0.40 | 0.50 | 0.60 | |
| $A_2$ | — | — | 2.85 | |
| D/E | 42.50 BASIC | | | |
| $D_1/E_1$ | 41.00 REF | | | |
| e | 1.00 BASIC | | | |
| øb | 0.50 | 0.60 | 0.70 | |
| aaa | — | — | 0.20 | |
| bbb | — | — | 0.25 | |
| ddd | — | — | 0.25 | |
| eee | — | — | 0.10 | |
| M | | 42 | | 2 |

NOTES:

1. ALL DIMENSIONS AND TOLERANCES CONFORM TO ASME Y14.5M-1994
2. SYMBOL "M" IS THE PIN MATRIX SIZE.
3. CONFORMS TO JEDEC MS-034-AAV-1 (DEPOPULATED)

*Figure 10:* **FF1696 Flip-Chip Fine-Pitch BGA Package Specifications**

## Revision History

This section records the change history for this module of the data sheet.

| Date | Version | Revision |
|---|---|---|
| 01/31/02 | 1.0 | Initial Xilinx release. |
| 08/14/02 | 2.0 | Added package and pinout information for new devices. |
| 08/27/02 | 2.1 | • Updated SelectIO-Ultra information in Table 4. (Table deleted in v2.3.)<br>• Corrected direction for RXNPAD and TXPPAD in Table 4 (formerly Table 5). |
| 09/27/02 | 2.2 | Corrected Table 2 and Table 3 entries for XC2VP30, FF1152 package, maximum I/Os from 692 to 644. |
| 11/20/02 | 2.3 | Added Number of Differential Pairs data to Table 3. Removed former Table 4. |
| 12/03/02 | 2.4 | Corrections in Table 4:<br>• Reclassified GCLKx (S/P) pins as Input/Output, since these pins can be used as normal I/Os if not used as clocks.<br>• Added cautionary note to PWRDWN_B pin, indicating that this function is not supported. |
| 01/20/03 | 2.5 | Added and removed package/pinout information for existing devices:<br>• In Table 1, added FG676 package information.<br>• In Table 3, added FG676 package option for XC2VP20, XC2VP30, and XC2VP40.<br>• In Table 12, removed FF1517 package option for XC2VP40.<br>• Added FG676 package pinouts (Table 7) for XC2VP20, XC2VP30, and XC2VP40.<br>• Added package diagram (Figure 3) for FG676 package. |
| 05/19/03 | 2.5.1 | • Added section **BREFCLK Pin Definitions**, page 5.<br>• Added clarification to Table 4 and all device pinout tables regarding the dual-use nature of pins D0/DIN and BUSY/DOUT during configuration. |
| 06/19/03 | 2.5.3 | • Added notation of "open-drain" to TDO pin in Table 4.<br>• The final GND pin in each of six pinout tables was inadvertently deleted in v2.5.1. This revision restores the deleted GND pins as follows:<br>- Pin A1, Table 6, page 16 (FG456)<br>- Pin AF26, Table 7, page 30 (FG676)<br>- Pin AN34, Table 10, page 98 (FF1152)<br>- Pin E1, Table 11, page 130 (FF1148)<br>- Pin C38, Table 12, page 162 (FF1517)<br>- Pin E1, Table 14, page 253 (FF1696) |
| 08/25/03 | 2.5.5 | • Table 4: Deleted Note 2, obsolete. There is only one GNDA pin per MGT.<br>• Table 4: Deleted pins ALT_VRP and ALT_VRN. Not used in Virtex-II Pro FPGAs. |
| 12/10/03 | 3.0 | • XC2VP2 through XC2VP70 speed grades -5, -6, and -7, and XC2VP100 speed grades -5 and -6, are released to **Production status**. |
| 02/19/04 | 3.1 | • Table 4, signal descriptions column:<br>- For signals TDI, TMS, and TCK, added: Pins are 3.3V-compatible.<br>- For signals M2, M1, M0, added: Tie to 3.3V only with 100Ω series resistor. No toggling during or after configuration.<br>- For signal TDO, added: No internal pull-up. External pull-up to 3.3V OK with resistor greater than 200Ω. |
| 03/09/04 | 3.1.1 | • Recompiled for backward compatibility with Acrobat 4 and above. No content changes. |
| 06/30/04 | 4.0 | Merged in DS110-4 (Module 4 of Virtex-II Pro X data sheet). Added data on available Pb-free packages and updated package diagrams for affected devices. |

| Date | Version | Revision |
|---|---|---|
| 11/17/04 | 4.1 | • Table 4: Added requirement to $V_{BATT}$ to connect pin to $V_{CCAUX}$ or GND if battery is not used. |
| 03/01/05 | 4.2 | • Table 3: Corrected number of Differential I/O Pairs for XC2VP30-FF1152 from 340 to 316.<br>• Table 4: Changed Direction for User I/O pins (IO_LXXY_#) from “Input/Output” to “Input/Output/Bidirectional”. |
| 06/20/05 | 4.3 | *No changes in Module 4 for this revision.* |
| 09/15/05 | 4.4 | *No changes in Module 4 for this revision.* |
| 10/10/05 | 4.5 | *No changes in Module 4 for this revision.* |
| 03/05/07 | 4.6 | • Figure 2, page 29: Corrected NOTE 3.<br>• Figure 7, page 161: Updated with drawing showing correct heat sink profile and detail. |
| 11/05/07 | 4.7 | Updated copyright notice and legal disclaimer. |
| 06/21/11 | 5.0 | Added *Product Not Recommended for New Designs* banner. Updated Figure 3, page 50, with the newest FG676/FGG676 mechanical drawing. |

## Notice of Disclaimer

THE XILINX HARDWARE FPGA AND CPLD DEVICES REFERRED TO HEREIN (“PRODUCTS”) ARE SUBJECT TO THE TERMS AND CONDITIONS OF THE XILINX LIMITED WARRANTY WHICH CAN BE VIEWED AT http://www.xilinx.com/warranty.htm. THIS LIMITED WARRANTY DOES NOT EXTEND TO ANY USE OF PRODUCTS IN AN APPLICATION OR ENVIRONMENT THAT IS NOT WITHIN THE SPECIFICATIONS STATED IN THE XILINX DATA SHEET. ALL SPECIFICATIONS ARE SUBJECT TO CHANGE WITHOUT NOTICE. PRODUCTS ARE NOT DESIGNED OR INTENDED TO BE FAIL-SAFE OR FOR USE IN ANY APPLICATION REQUIRING FAIL-SAFE PERFORMANCE, SUCH AS LIFE-SUPPORT OR SAFETY DEVICES OR SYSTEMS, OR ANY OTHER APPLICATION THAT INVOKES THE POTENTIAL RISKS OF DEATH, PERSONAL INJURY, OR PROPERTY OR ENVIRONMENTAL DAMAGE (“CRITICAL APPLICATIONS”). USE OF PRODUCTS IN CRITICAL APPLICATIONS IS AT THE SOLE RISK OF CUSTOMER, SUBJECT TO APPLICABLE LAWS AND REGULATIONS.

## Virtex-II Pro Data Sheet

The Virtex-II Pro Data Sheet contains the following modules:

- Virtex-II Pro and Virtex-II Pro X Platform FPGAs: Introduction and Overview (Module 1)
- Virtex-II Pro and Virtex-II Pro X Platform FPGAs: Functional Description (Module 2)
- Virtex-II Pro and Virtex-II Pro X Platform FPGAs: DC and Switching Characteristics (Module 3)
- Virtex-II Pro and Virtex-II Pro X Platform FPGAs: Pinout Information (Module 4)

# OCEAN CHIPS
## Океан Электроники
### Поставка электронных компонентов

Компания «Океан Электроники» предлагает заключение долгосрочных отношений при поставках импортных электронных компонентов на взаимовыгодных условиях!

Наши преимущества:

- Поставка оригинальных импортных электронных компонентов напрямую с производств Америки, Европы и Азии, а так же с крупнейших складов мира;
- Широкая линейка поставок активных и пассивных импортных электронных компонентов (более 30 млн. наименований);
- Поставка сложных, дефицитных, либо снятых с производства позиций;
- Оперативные сроки поставки под заказ (от 5 рабочих дней);
- Экспресс доставка в любую точку России;
- Помощь Конструкторского Отдела и консультации квалифицированных инженеров;
- Техническая поддержка проекта, помощь в подборе аналогов, поставка прототипов;
- Поставка электронных компонентов под контролем ВП;
- Система менеджмента качества сертифицирована по Международному стандарту ISO 9001;
- При необходимости вся продукция военного и аэрокосмического назначения проходит испытания и сертификацию в лаборатории (по согласованию с заказчиком);
- Поставка специализированных компонентов военного и аэрокосмического уровня качества (Xilinx, Altera, Analog Devices, Intersil, Interpoint, Microsemi, Actel, Aeroflex, Peregrine, VPT, Syfer, Eurofarad, Texas Instruments, MS Kennedy, Miteq, Cobham, E2V, MA-COM, Hittite, Mini-Circuits, General Dynamics и др.);

Компания «Океан Электроники» является официальным дистрибьютором и эксклюзивным представителем в России одного из крупнейших производителей разъемов военного и аэрокосмического назначения **«JONHON»**, а так же официальным дистрибьютором и эксклюзивным представителем в России производителя высокотехнологичных и надежных решений для передачи СВЧ сигналов **«FORSTAR»**.

AVIC JONHON

**«JONHON»** (основан в 1970 г.)

Разъемы специального, военного и аэрокосмического назначения:

(Применяются в военной, авиационной, аэрокосмической, морской, железнодорожной, горно- и нефтедобывающей отраслях промышленности)

**«FORSTAR»** (основан в 1998 г.)

ВЧ соединители, коаксиальные кабели, кабельные сборки и микроволновые компоненты:

(Применяются в телекоммуникациях гражданского и специального назначения, в средствах связи, РЛС, а так же военной, авиационной и аэрокосмической отраслях промышленности).

FORSTAR®

Телефон: 8 (812) 309-75-97 (многоканальный)
Факс: 8 (812) 320-03-32
Электронная почта: ocean@oceanchips.ru
Web: http://oceanchips.ru/
Адрес: 198099, г. Санкт-Петербург, ул. Калинина, д. 2, корп. 4, лит. А