MAX 3000A

Programmable Logic Device Family

June 2006, ver. 3.5 Data Sheet

Features...

- High–performance, low–cost CMOS EEPROM–based programmable logic devices (PLDs) built on a MAX® architecture (see Table 1)
- 3.3-V in-system programmability (ISP) through the built–in IEEE Std. 1149.1 Joint Test Action Group (JTAG) interface with advanced pin-locking capability
  - ISP circuitry compliant with IEEE Std. 1532
- Built–in boundary-scan test (BST) circuitry compliant with IEEE Std. 1149.1-1990
- Enhanced ISP features:
  - Enhanced ISP algorithm for faster programming
  - ISP_Done bit to ensure complete programming
  - Pull-up resistor on I/O pins during in–system programming
- High–density PLDs ranging from 600 to 10,000 usable gates
- 4.5–ns pin–to–pin logic delays with counter frequencies of up to 227.3 MHz
- MultiVolt™ I/O interface enabling the device core to run at 3.3 V, while I/O pins are compatible with 5.0–V, 3.3–V, and 2.5–V logic levels
- Pin counts ranging from 44 to 256 in a variety of thin quad flat pack (TQFP), plastic quad flat pack (PQFP), plastic J–lead chip carrier (PLCC), and FineLine BGA™ packages
- Hot–socketing support
- Programmable interconnect array (PIA) continuous routing structure for fast, predictable performance
- Industrial temperature range

Table 1. MAX 3000A Device Features

Feature	EPM3032A	EPM3064A	EPM3128A	EPM3256A	EPM3512A
Usable gates	600	1,250	2,500	5,000	10,000
Macrocells	32	64	128	256	512
Logic array blocks	2	4	8	16	32
Maximum user I/O pins	34	66	98	161	208
t_{PD} (ns)	4.5	4.5	5.0	7.5	7.5
t_{SU} (ns)	2.9	2.8	3.3	5.2	5.6
t_{CO1} (ns)	3.0	3.1	3.4	4.8	4.7
f_{CNT} (MHz)	227.3	222.2	192.3	126.6	116.3

…and More Features

- PCI compatible
- Bus–friendly architecture including programmable slew–rate control
- Open–drain output option
- Programmable macrocell flipflops with individual clear, preset, clock, and clock enable controls
- Programmable power–saving mode for a power reduction of over 50% in each macrocell
- Configurable expander product–term distribution, allowing up to 32 product terms per macrocell
- Programmable security bit for protection of proprietary designs
- Enhanced architectural features, including:
  - 6 or 10 pin– or logic–driven output enable signals
  - Two global clock signals with optional inversion
  - Enhanced interconnect resources for improved routability
  - Programmable output slew–rate control
- Software design support and automatic place–and–route provided by Altera's development systems for Windows–based PCs and Sun SPARCstations, and HP 9000 Series 700/800 workstations
- Additional design entry and simulation support provided by EDIF 2 0 0 and 3 0 0 netlist files, library of parameterized modules (LPM), Verilog HDL, VHDL, and other interfaces to popular EDA tools from third–party manufacturers such as Cadence, Exemplar Logic, Mentor Graphics, OrCAD, Synopsys, Synplicity, and VeriBest
- Programming support with the Altera master programming unit (MPU), MasterBlaster™ communications cable, ByteBlasterMV™ parallel port download cable, BitBlaster™ serial download cable as well as programming hardware from third–party manufacturers and any in–circuit tester that supports Jam™ Standard Test and Programming Language (STAPL) Files (**.jam**), Jam STAPL Byte-Code Files (**.jbc**), or Serial Vector Format Files (**.svf**)

General Description

MAX 3000A devices are low–cost, high–performance devices based on the Altera MAX architecture. Fabricated with advanced CMOS technology, the EEPROM–based MAX 3000A devices operate with a 3.3-V supply voltage and provide 600 to 10,000 usable gates, ISP, pin-to-pin delays as fast as 4.5 ns, and counter speeds of up to 227.3 MHz. MAX 3000A devices in the –4, –5, –6, –7, and –10 speed grades are compatible with the timing requirements of the PCI Special Interest Group (PCI SIG) ***PCI Local Bus Specification, Revision 2.2***. See Table 2.

Table 2. MAX 3000A Speed Grades

Device	Speed Grade				
	–4	–5	–6	–7	–10
EPM3032A	✓			✓	✓
EPM3064A	✓			✓	✓
EPM3128A		✓		✓	✓
EPM3256A				✓	✓
EPM3512A				✓	✓

The MAX 3000A architecture supports 100% transistor-to-transistor logic (TTL) emulation and high–density small-scale integration (SSI), medium-scale integration (MSI), and large-scale integration (LSI) logic functions. The MAX 3000A architecture easily integrates multiple devices ranging from PALs, GALs, and 22V10s to MACH and pLSI devices. MAX 3000A devices are available in a wide range of packages, including PLCC, PQFP, and TQFP packages. See Table 3.

Table 3. MAX 3000A Maximum User I/O Pins *Note (1)*

Device	44–Pin PLCC	44–Pin TQFP	100–Pin TQFP	144–Pin TQFP	208–Pin PQFP	256-Pin FineLine BGA
EPM3032A	34	34				
EPM3064A	34	34	66			
EPM3128A			80	96		98
EPM3256A				116	158	161
EPM3512A					172	208

Note:

(1) When the IEEE Std. 1149.1 (JTAG) interface is used for in–system programming or boundary–scan testing, four I/O pins become JTAG pins.

MAX 3000A devices use CMOS EEPROM cells to implement logic functions. The user–configurable MAX 3000A architecture accommodates a variety of independent combinatorial and sequential logic functions. The devices can be reprogrammed for quick and efficient iterations during design development and debugging cycles, and can be programmed and erased up to 100 times.

MAX 3000A devices contain 32 to 512 macrocells, combined into groups of 16 macrocells called logic array blocks (LABs). Each macrocell has a programmable–AND/fixed–OR array and a configurable register with independently programmable clock, clock enable, clear, and preset functions. To build complex logic functions, each macrocell can be supplemented with shareable expander and high–speed parallel expander product terms to provide up to 32 product terms per macrocell.

MAX 3000A devices provide programmable speed/power optimization. Speed–critical portions of a design can run at high speed/full power, while the remaining portions run at reduced speed/low power. This speed/power optimization feature enables the designer to configure one or more macrocells to operate at 50% or lower power while adding only a nominal timing delay. MAX 3000A devices also provide an option that reduces the slew rate of the output buffers, minimizing noise transients when non–speed–critical signals are switching. The output drivers of all MAX 3000A devices can be set for 2.5 V or 3.3 V, and all input pins are 2.5–V, 3.3–V, and 5.0-V tolerant, allowing MAX 3000A devices to be used in mixed–voltage systems.

MAX 3000A devices are supported by Altera development systems, which are integrated packages that offer schematic, text—including VHDL, Verilog HDL, and the Altera Hardware Description Language (AHDL)—and waveform design entry, compilation and logic synthesis, simulation and timing analysis, and device programming. The software provides EDIF 2 0 0 and 3 0 0, LPM, VHDL, Verilog HDL, and other interfaces for additional design entry and simulation support from other industry–standard PC– and UNIX–workstation–based EDA tools. The software runs on Windows–based PCs, as well as Sun SPARCstation, and HP 9000 Series 700/800 workstations.

For more information on development tools, see the *MAX+PLUS II Programmable Logic Development System & Software Data Sheet* and the *Quartus Programmable Logic Development System & Software Data Sheet*.

Functional Description

The MAX 3000A architecture includes the following elements:

- Logic array blocks (LABs)
- Macrocells
- Expander product terms (shareable and parallel)
- Programmable interconnect array (PIA)
- I/O control blocks

The MAX 3000A architecture includes four dedicated inputs that can be used as general–purpose inputs or as high–speed, global control signals (clock, clear, and two output enable signals) for each macrocell and I/O pin. Figure 1 shows the architecture of MAX 3000A devices.

Figure 1. MAX 3000A Device Block Diagram

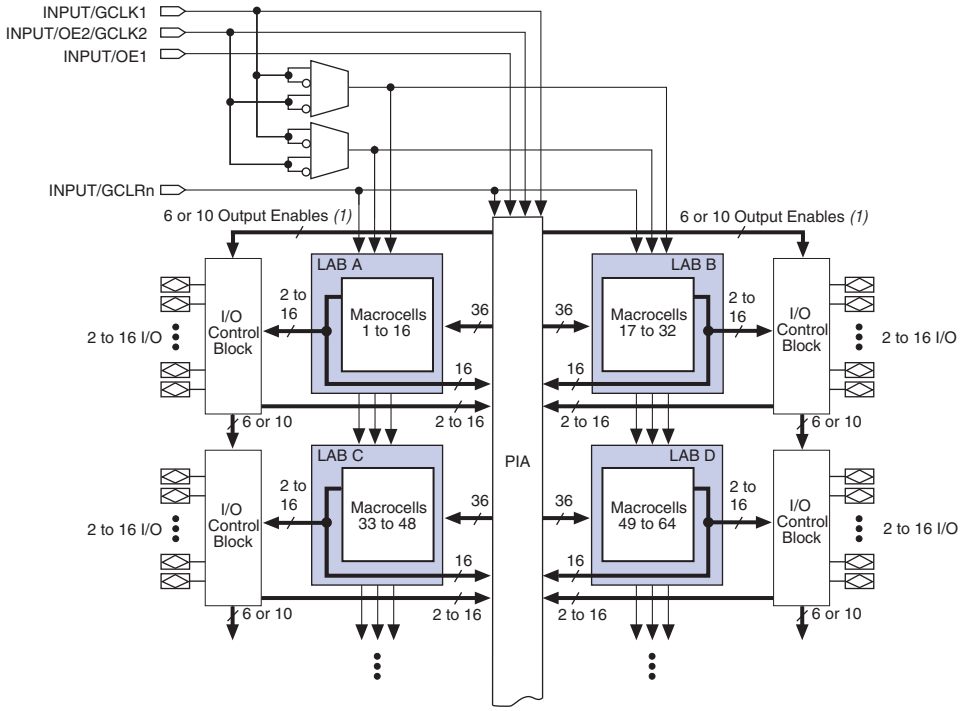

Note:

(1) EPM3032A, EPM3064A, EPM3128A, and EPM3256A devices have six output enables. EPM3512A devices have 10 output enables.

Logic Array Blocks

The MAX 3000A device architecture is based on the linking of high–performance LABs. LABs consist of 16–macrocell arrays, as shown in Figure 1. Multiple LABs are linked together via the PIA, a global bus that is fed by all dedicated input pins, I/O pins, and macrocells.

Each LAB is fed by the following signals:

- 36 signals from the PIA that are used for general logic inputs
- Global controls that are used for secondary register functions

Macrocells

MAX 3000A macrocells can be individually configured for either sequential or combinatorial logic operation. Macrocells consist of three functional blocks: logic array, product–term select matrix, and programmable register. Figure 2 shows a MAX 3000A macrocell.

Figure 2. MAX 3000A Macrocell

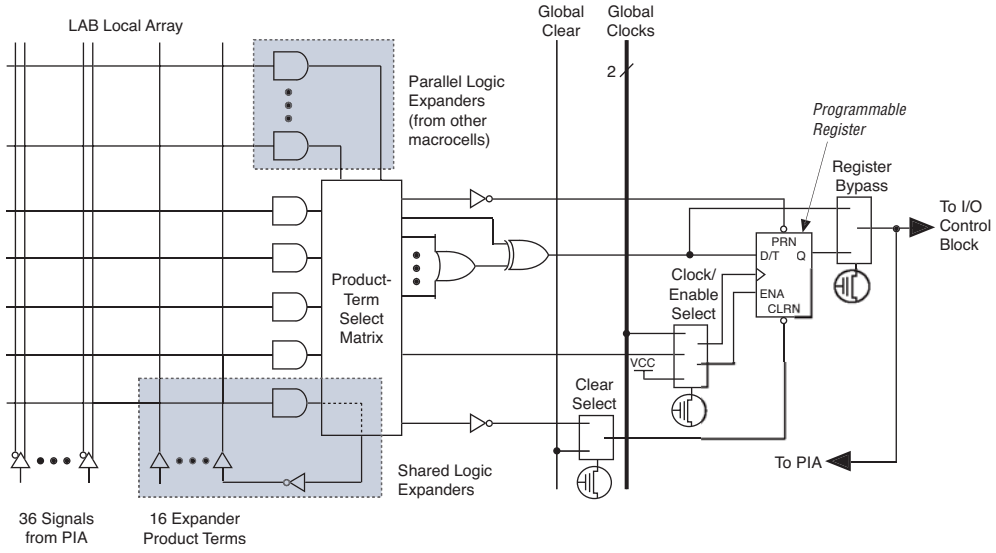

Combinatorial logic is implemented in the logic array, which provides five product terms per macrocell. The product–term select matrix allocates these product terms for use as either primary logic inputs (to the OR and XOR gates) to implement combinatorial functions, or as secondary inputs to the macrocell's register preset, clock, and clock enable control functions.

Two kinds of expander product terms ("expanders") are available to supplement macrocell logic resources:

- Shareable expanders, which are inverted product terms that are fed back into the logic array
- Parallel expanders, which are product terms borrowed from adjacent macrocells

The Altera development system automatically optimizes product–term allocation according to the logic requirements of the design.

For registered functions, each macrocell flipflop can be individually programmed to implement D, T, JK, or SR operation with programmable clock control. The flipflop can be bypassed for combinatorial operation. During design entry, the designer specifies the desired flipflop type; the Altera development system software then selects the most efficient flipflop operation for each registered function to optimize resource utilization.

Each programmable register can be clocked in three different modes:

- Global clock signal mode, which achieves the fastest clock–to–output performance.
- Global clock signal enabled by an active–high clock enable. A clock enable is generated by a product term. This mode provides an enable on each flipflop while still achieving the fast clock–to–output performance of the global clock.
- Array clock implemented with a product term. In this mode, the flipflop can be clocked by signals from buried macrocells or I/O pins.

Two global clock signals are available in MAX 3000A devices. As shown in Figure 1, these global clock signals can be the true or the complement of either of the two global clock pins, `GCLK1` or `GCLK2`.

Each register also supports asynchronous preset and clear functions. As shown in Figure 2, the product–term select matrix allocates product terms to control these operations. Although the product–term–driven preset and clear from the register are active high, active–low control can be obtained by inverting the signal within the logic array. In addition, each register clear function can be individually driven by the active–low dedicated global clear pin (`GCLRn`).

All registers are cleared upon power-up. By default, all registered outputs drive low when the device is powered up. You can set the registered outputs to drive high upon power-up through the Quartus® II software. Quartus II software uses the NOT Gate Push-Back method, which uses an additional macrocell to set the output high. To set this in the Quartus II software, go to the Assignment Editor and set the **Power-Up Level** assignment for the register to **High**.

Expander Product Terms

Although most logic functions can be implemented with the five product terms available in each macrocell, highly complex logic functions require additional product terms. Another macrocell can be used to supply the required logic resources. However, the MAX 3000A architecture also offers both shareable and parallel expander product terms (“expanders”) that provide additional product terms directly to any macrocell in the same LAB. These expanders help ensure that logic is synthesized with the fewest possible logic resources to obtain the fastest possible speed.

Shareable Expanders

Each LAB has 16 shareable expanders that can be viewed as a pool of uncommitted single product terms (one from each macrocell) with inverted outputs that feed back into the logic array. Each shareable expander can be used and shared by any or all macrocells in the LAB to build complex logic functions. Shareable expanders incur a small delay (t_{SEXP}). Figure 3 shows how shareable expanders can feed multiple macrocells.

Figure 3. MAX 3000A Shareable Expanders

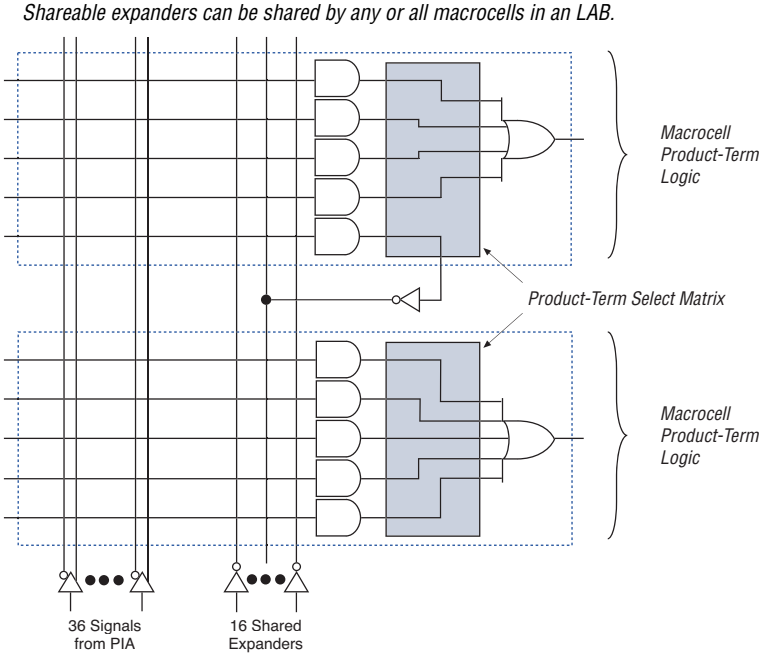

Parallel Expanders

Parallel expanders are unused product terms that can be allocated to a neighboring macrocell to implement fast, complex logic functions. Parallel expanders allow up to 20 product terms to directly feed the macrocell OR logic, with five product terms provided by the macrocell and 15 parallel expanders provided by neighboring macrocells in the LAB.

The Altera development system compiler can automatically allocate up to three sets of up to five parallel expanders to the macrocells that require additional product terms. Each set of five parallel expanders incurs a small, incremental timing delay (t_{PEXP}). For example, if a macrocell requires 14 product terms, the compiler uses the five dedicated product terms within the macrocell and allocates two sets of parallel expanders; the first set includes five product terms, and the second set includes four product terms, increasing the total delay by $2 \times t_{PEXP}$.

Two groups of eight macrocells within each LAB (e.g., macrocells 1 through 8 and 9 through 16) form two chains to lend or borrow parallel expanders. A macrocell borrows parallel expanders from lower–numbered macrocells. For example, macrocell 8 can borrow parallel expanders from macrocell 7, from macrocells 7 and 6, or from macrocells 7, 6, and 5. Within each group of eight, the lowest–numbered macrocell can only lend parallel expanders and the highest–numbered macrocell can only borrow them. Figure 4 shows how parallel expanders can be borrowed from a neighboring macrocell.

Figure 4. MAX 3000A Parallel Expanders

Unused product terms in a macrocell can be allocated to a neighboring macrocell.

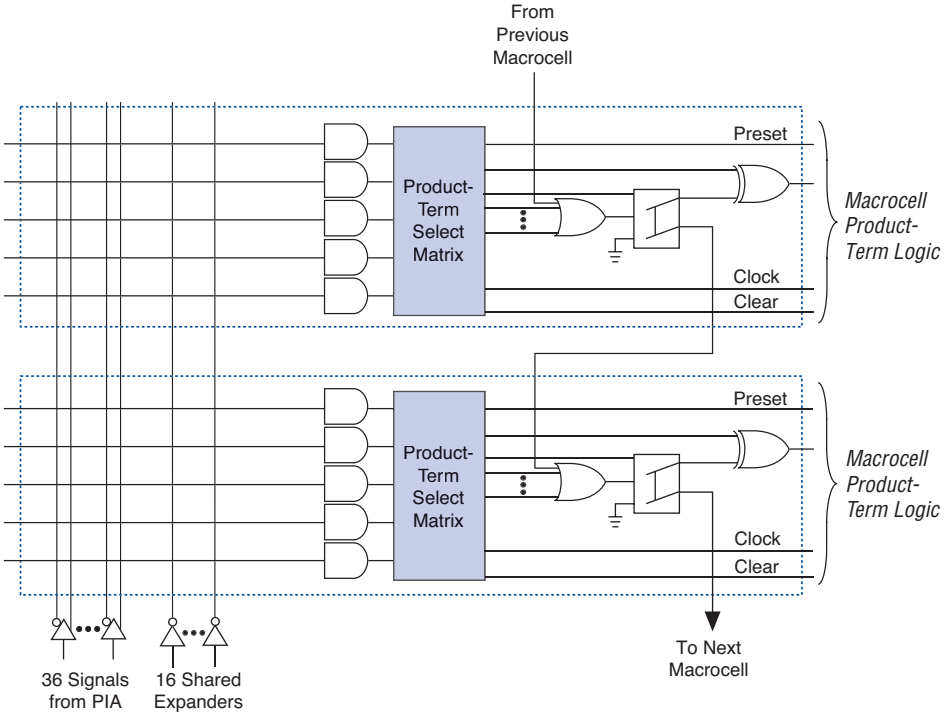

Programmable Interconnect Array

Logic is routed between LABs on the PIA. This global bus is a programmable path that connects any signal source to any destination on the device. All MAX 3000A dedicated inputs, I/O pins, and macrocell outputs feed the PIA, which makes the signals available throughout the entire device. Only the signals required by each LAB are actually routed from the PIA into the LAB. Figure 5 shows how the PIA signals are routed into the LAB. An EEPROM cell controls one input to a two-input AND gate, which selects a PIA signal to drive into the LAB.

Figure 5. MAX 3000A PIA Routing

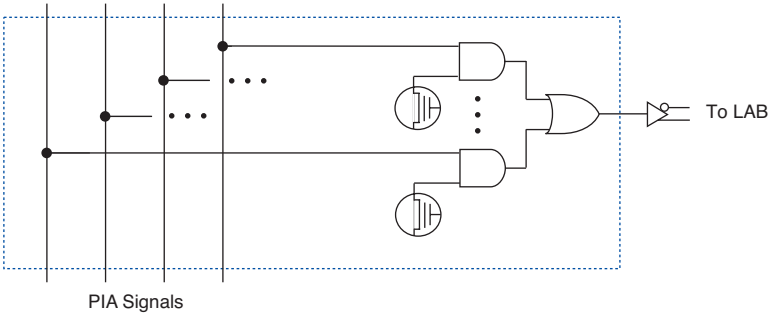

While the routing delays of channel–based routing schemes in masked or FPGAs are cumulative, variable, and path–dependent, the MAX 3000A PIA has a predictable delay. The PIA makes a design's timing performance easy to predict.

I/O Control Blocks

The I/O control block allows each I/O pin to be individually configured for input, output, or bidirectional operation. All I/O pins have a tri–state buffer that is individually controlled by one of the global output enable signals or directly connected to ground or V_{CC}. Figure 6 shows the I/O control block for MAX 3000A devices. The I/O control block has 6 or 10 global output enable signals that are driven by the true or complement of two output enable signals, a subset of the I/O pins, or a subset of the I/O macrocells.

Figure 6. I/O Control Block of MAX 3000A Devices

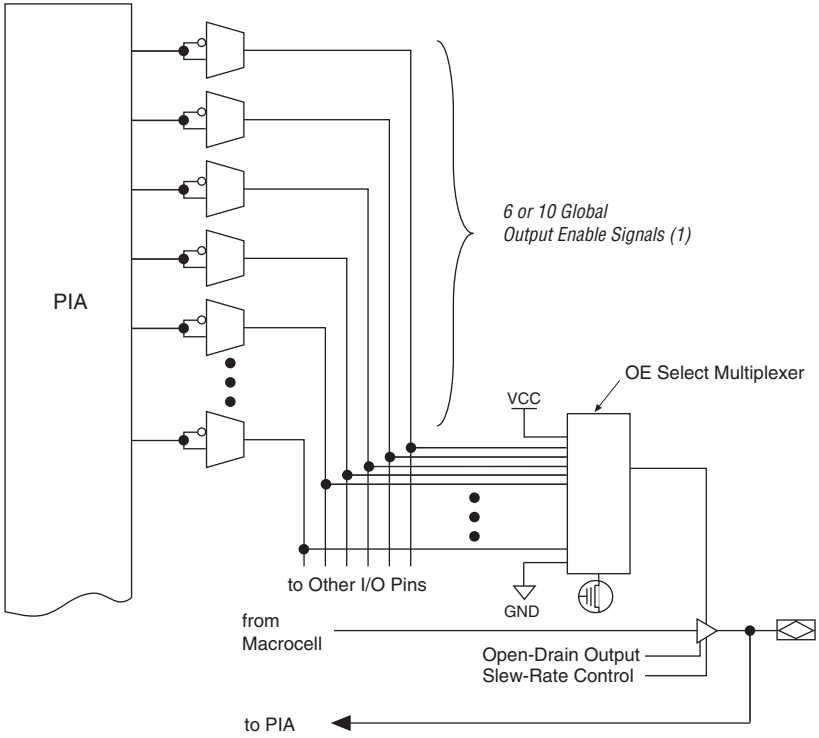

Note:

(1) EPM3032A, EPM3064A, EPM3128A, and EPM3256A devices have six output enables. EPM3512A devices have 10 output enables.

When the tri–state buffer control is connected to ground, the output is tri-stated (high impedance), and the I/O pin can be used as a dedicated input. When the tri–state buffer control is connected to V_{CC}, the output is enabled.

The MAX 3000A architecture provides dual I/O feedback, in which macrocell and pin feedbacks are independent. When an I/O pin is configured as an input, the associated macrocell can be used for buried logic.

In–System Programmability

MAX 3000A devices can be programmed in–system via an industry–standard four–pin IEEE Std. 1149.1-1990 (JTAG) interface. In-system programmability (ISP) offers quick, efficient iterations during design development and debugging cycles. The MAX 3000A architecture internally generates the high programming voltages required to program its EEPROM cells, allowing in–system programming with only a single 3.3–V power supply. During in–system programming, the I/O pins are tri–stated and weakly pulled–up to eliminate board conflicts. The pull–up value is nominally 50 kΩ

MAX 3000A devices have an enhanced ISP algorithm for faster programming. These devices also offer an `ISP_Done` bit that ensures safe operation when in–system programming is interrupted. This `ISP_Done` bit, which is the last bit programmed, prevents all I/O pins from driving until the bit is programmed.

ISP simplifies the manufacturing flow by allowing devices to be mounted on a printed circuit board (PCB) with standard pick–and–place equipment before they are programmed. MAX 3000A devices can be programmed by downloading the information via in–circuit testers, embedded processors, the MasterBlaster communications cable, the ByteBlasterMV parallel port download cable, and the BitBlaster serial download cable. Programming the devices after they are placed on the board eliminates lead damage on high–pin–count packages (e.g., QFP packages) due to device handling. MAX 3000A devices can be reprogrammed after a system has already shipped to the field. For example, product upgrades can be performed in the field via software or modem.

The Jam STAPL programming and test language can be used to program MAX 3000A devices with in–circuit testers, PCs, or embedded processors.

For more information on using the Jam STAPL programming and test language, see *Application Note 88 (Using the Jam Language for ISP & ICR via an Embedded Processor)*, *Application Note 122 (Using Jam STAPL for ISP & ICR via an Embedded Processor)* and *AN 111 (Embedded Programming Using the 8051 and Jam Byte-Code)*.

The ISP circuitry in MAX 3000A devices is compliant with the IEEE Std. 1532 specification. The IEEE Std. 1532 is a standard developed to allow concurrent ISP between multiple PLD vendors.

Programming Sequence

During in-system programming, instructions, addresses, and data are shifted into the MAX 3000A device through the `TDI` input pin. Data is shifted out through the `TDO` output pin and compared against the expected data.

Programming a pattern into the device requires the following six ISP stages. A stand-alone verification of a programmed pattern involves only stages 1, 2, 5, and 6.

1. *Enter ISP*. The enter ISP stage ensures that the I/O pins transition smoothly from user mode to ISP mode. The enter ISP stage requires 1 ms.

2. *Check ID*. Before any program or verify process, the silicon ID is checked. The time required to read this silicon ID is relatively small compared to the overall programming time.

3. *Bulk Erase*. Erasing the device in-system involves shifting in the instructions to erase the device and applying one erase pulse of 100 ms.

4. *Program*. Programming the device in-system involves shifting in the address and data and then applying the programming pulse to program the EEPROM cells. This process is repeated for each EEPROM address.

5. *Verify*. Verifying an Altera device in-system involves shifting in addresses, applying the read pulse to verify the EEPROM cells, and shifting out the data for comparison. This process is repeated for each EEPROM address.

6. *Exit ISP*. An exit ISP stage ensures that the I/O pins transition smoothly from ISP mode to user mode. The exit ISP stage requires 1 ms.

Programming Times

The time required to implement each of the six programming stages can be broken into the following two elements:

- A pulse time to erase, program, or read the EEPROM cells.
- A shifting time based on the test clock (`TCK`) frequency and the number of `TCK` cycles to shift instructions, address, and data into the device.

By combining the pulse and shift times for each of the programming stages, the program or verify time can be derived as a function of the TCK frequency, the number of devices, and specific target device(s). Because different ISP-capable devices have a different number of EEPROM cells, both the total fixed and total variable times are unique for a single device.

Programming a Single MAX 3000A Device

The time required to program a single MAX 3000A device in-system can be calculated from the following formula:

$$t_{PROG} = t_{PPULSE} + \frac{Cycle_{PTCK}}{f_{TCK}}$$

where: t_{PROG} = Programming time
t_{PPULSE} = Sum of the fixed times to erase, program, and verify the EEPROM cells
$Cycle_{PTCK}$ = Number of TCK cycles to program a device
f_{TCK} = TCK frequency

The ISP times for a stand-alone verification of a single MAX 3000A device can be calculated from the following formula:

$$t_{VER} = t_{VPULSE} + \frac{Cycle_{VTCK}}{f_{TCK}}$$

where: t_{VER} = Verify time
t_{VPULSE} = Sum of the fixed times to verify the EEPROM cells
$Cycle_{VTCK}$ = Number of TCK cycles to verify a device

The programming times described in Tables 4 through 6 are associated with the worst-case method using the enhanced ISP algorithm.

Table 4. MAX 3000A t_{PULSE} & $Cycle_{TCK}$ Values

Device	Programming		Stand-Alone Verification	
	t_{PPULSE} (s)	$Cycle_{PTCK}$	t_{VPULSE} (s)	$Cycle_{VTCK}$
EPM3032A	2.00	55,000	0.002	18,000
EPM3064A	2.00	105,000	0.002	35,000
EPM3128A	2.00	205,000	0.002	68,000
EPM3256A	2.00	447,000	0.002	149,000
EPM3512A	2.00	890,000	0.002	297,000

Tables 5 and 6 show the in-system programming and stand alone verification times for several common test clock frequencies.

Table 5. MAX 3000A In-System Programming Times for Different Test Clock Frequencies

Device	f_{TCK}								Units
	10 MHz	5 MHz	2 MHz	1 MHz	500 kHz	200 kHz	100 kHz	50 kHz	
EPM3032A	2.01	2.01	2.03	2.06	2.11	2.28	2.55	3.10	s
EPM3064A	2.01	2.02	2.05	2.11	2.21	2.53	3.05	4.10	s
EPM3128A	2.02	2.04	2.10	2.21	2.41	3.03	4.05	6.10	s
EPM3256A	2.05	2.09	2.23	2.45	2.90	4.24	6.47	10.94	s
EPM3512A	2.09	2.18	2.45	2.89	3.78	6.45	10.90	19.80	s

Table 6. MAX 3000A Stand-Alone Verification Times for Different Test Clock Frequencies

Device	f_{TCK}								Units
	10 MHz	5 MHz	2 MHz	1 MHz	500 kHz	200 kHz	100 kHz	50 kHz	
EPM3032A	0.00	0.01	0.01	0.02	0.04	0.09	0.18	0.36	s
EPM3064A	0.01	0.01	0.02	0.04	0.07	0.18	0.35	0.70	s
EPM3128A	0.01	0.02	0.04	0.07	0.14	0.34	0.68	1.36	s
EPM3256A	0.02	0.03	0.08	0.15	0.30	0.75	1.49	2.98	s
EPM3512A	0.03	0.06	0.15	0.30	0.60	1.49	2.97	5.94	s

Programming with External Hardware

MAX 3000A devices can be programmed on Windows–based PCs with an Altera Logic Programmer card, MPU, and the appropriate device adapter. The MPU performs continuity checking to ensure adequate electrical contact between the adapter and the device.

For more information, see the *Altera Programming Hardware Data Sheet*.

The Altera software can use text– or waveform–format test vectors created with the Altera Text Editor or Waveform Editor to test the programmed device. For added design verification, designers can perform functional testing to compare the functional device behavior with the results of simulation.

Data I/O, BP Microsystems, and other programming hardware manufacturers also provide programming support for Altera devices.

For more information, see *Programming Hardware Manufacturers*.

IEEE Std. 1149.1 (JTAG) Boundary–Scan Support

MAX 3000A devices include the JTAG BST circuitry defined by IEEE Std. 1149.1–1990. Table 7 describes the JTAG instructions supported by MAX 3000A devices. The pin-out tables found on the Altera web site (**http://www.altera.com**) or the *Altera Digital Library* show the location of the JTAG control pins for each device. If the JTAG interface is not required, the JTAG pins are available as user I/O pins.

Table 7. MAX 3000A JTAG Instructions

JTAG Instruction	Description
SAMPLE/PRELOAD	Allows a snapshot of signals at the device pins to be captured and examined during normal device operation, and permits an initial data pattern output at the device pins
EXTEST	Allows the external circuitry and board–level interconnections to be tested by forcing a test pattern at the output pins and capturing test results at the input pins
BYPASS	Places the 1–bit bypass register between the `TDI` and `TDO` pins, which allows the BST data to pass synchronously through a selected device to adjacent devices during normal device operation
IDCODE	Selects the IDCODE register and places it between the `TDI` and `TDO` pins, allowing the IDCODE to be serially shifted out of `TDO`
USERCODE	Selects the 32–bit USERCODE register and places it between the `TDI` and `TDO` pins, allowing the USERCODE value to be shifted out of `TDO`
ISP Instructions	These instructions are used when programming MAX 3000A devices via the JTAG ports with the MasterBlaster, ByteBlasterMV, or BitBlaster cable, or when using a Jam STAPL file, JBC file, or SVF file via an embedded processor or test equipment

The instruction register length of MAX 3000A devices is 10 bits. The IDCODE and USERCODE register length is 32 bits. Tables 8 and 9 show the boundary–scan register length and device IDCODE information for MAX 3000A devices.

Table 8. MAX 3000A Boundary–Scan Register Length

Device	Boundary–Scan Register Length
EPM3032A	96
EPM3064A	192
EPM3128A	288
EPM3256A	480
EPM3512A	624

Table 9. 32–Bit MAX 3000A Device IDCODE Value *Note (1)*

Device	IDCODE (32 bits)			
	Version (4 Bits)	Part Number (16 Bits)	Manufacturer's Identity (11 Bits)	1 (1 Bit) *(2)*
EPM3032A	0001	0111 0000 0011 0010	00001101110	1
EPM3064A	0001	0111 0000 0110 0100	00001101110	1
EPM3128A	0001	0111 0001 0010 1000	00001101110	1
EPM3256A	0001	0111 0010 0101 0110	00001101110	1
EPM3512A	0001	0111 0101 0001 0010	00001101110	1

Notes:
(1) The most significant bit (MSB) is on the left.
(2) The least significant bit (LSB) for all JTAG IDCODEs is 1.

See *Application Note 39 (IEEE 1149.1 (JTAG) Boundary–Scan Testing in Altera Devices)* for more information on JTAG BST.

Figure 7 shows the timing information for the JTAG signals.

Figure 7. MAX 3000A JTAG Waveforms

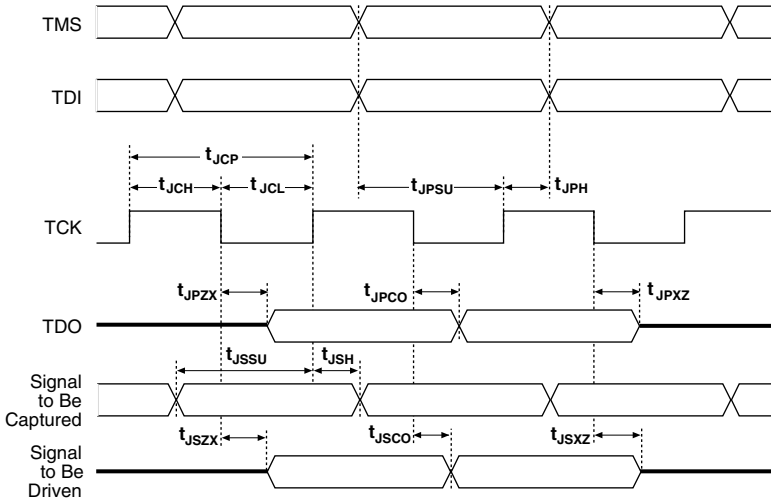

Table 10 shows the JTAG timing parameters and values for MAX 3000A devices.

Table 10. JTAG Timing Parameters & Values for MAX 3000A Devices

Symbol	Parameter	Min	Max	Unit
t_{JCP}	TCK clock period	100		ns
t_{JCH}	TCK clock high time	50		ns
t_{JCL}	TCK clock low time	50		ns
t_{JPSU}	JTAG port setup time	20		ns
t_{JPH}	JTAG port hold time	45		ns
t_{JPCO}	JTAG port clock to output		25	ns
t_{JPZX}	JTAG port high impedance to valid output		25	ns
t_{JPXZ}	JTAG port valid output to high impedance		25	ns
t_{JSSU}	Capture register setup time	20		ns
t_{JSH}	Capture register hold time	45		ns
t_{JSCO}	Update register clock to output		25	ns
t_{JSZX}	Update register high impedance to valid output		25	ns
t_{JSXZ}	Update register valid output to high impedance		25	ns

Programmable Speed/Power Control

MAX 3000A devices offer a power–saving mode that supports low-power operation across user–defined signal paths or the entire device. This feature allows total power dissipation to be reduced by 50% or more because most logic applications require only a small fraction of all gates to operate at maximum frequency.

The designer can program each individual macrocell in a MAX 3000A device for either high–speed or low–power operation. As a result, speed-critical paths in the design can run at high speed, while the remaining paths can operate at reduced power. Macrocells that run at low power incur a nominal timing delay adder (t_{LPA}) for the t_{LAD}, t_{LAC}, t_{IC}, t_{ACL}, t_{EN}, t_{CPPW} and t_{SEXP} parameters.

Output Configuration

MAX 3000A device outputs can be programmed to meet a variety of system–level requirements.

MultiVolt I/O Interface

The MAX 3000A device architecture supports the MultiVolt I/O interface feature, which allows MAX 3000A devices to connect to systems with differing supply voltages. MAX 3000A devices in all packages can be set for 2.5–V, 3.3–V, or 5.0–V I/O pin operation. These devices have one set of V_{CC} pins for internal operation and input buffers (`VCCINT`), and another set for I/O output drivers (`VCCIO`).

The `VCCIO` pins can be connected to either a 3.3–V or 2.5–V power supply, depending on the output requirements. When the `VCCIO` pins are connected to a 2.5–V power supply, the output levels are compatible with 2.5–V systems. When the `VCCIO` pins are connected to a 3.3–V power supply, the output high is at 3.3 V and is therefore compatible with 3.3-V or 5.0–V systems. Devices operating with V_{CCIO} levels lower than 3.0 V incur a nominally greater timing delay of t_{OD2} instead of t_{OD1}. Inputs can always be driven by 2.5–V, 3.3–V, or 5.0–V signals.

Table 11 summarizes the MAX 3000A MultiVolt I/O support.

Table 11. MAX 3000A MultiVolt I/O Support

V_{CCIO} Voltage	Input Signal (V)			Output Signal (V)		
	2.5	3.3	5.0	2.5	3.3	5.0
2.5	✓	✓	✓	✓		
3.3	✓	✓	✓	✓	✓	✓

Note:
(1) When V_{CCIO} is 3.3 V, a MAX 3000A device can drive a 2.5–V device that has 3.3–V tolerant inputs.

Open–Drain Output Option

MAX 3000A devices provide an optional open–drain (equivalent to open-collector) output for each I/O pin. This open–drain output enables the device to provide system–level control signals (e.g., interrupt and write enable signals) that can be asserted by any of several devices. It can also provide an additional wired–OR plane.

Open-drain output pins on MAX 3000A devices (with a pull-up resistor to the 5.0-V supply) can drive 5.0-V CMOS input pins that require a high V_{IH}. When the open-drain pin is active, it will drive low. When the pin is inactive, the resistor will pull up the trace to 5.0 V, thereby meeting CMOS requirements. The open-drain pin will only drive low or tri-state; it will never drive high. The rise time is dependent on the value of the pull-up resistor and load impedance. The I_{OL} current specification should be considered when selecting a pull-up resistor

Slew–Rate Control

The output buffer for each MAX 3000A I/O pin has an adjustable output slew rate that can be configured for low–noise or high–speed performance. A faster slew rate provides high–speed transitions for high-performance systems. However, these fast transitions may introduce noise transients into the system. A slow slew rate reduces system noise, but adds a nominal delay of 4 to 5 ns. When the configuration cell is turned off, the slew rate is set for low–noise performance. Each I/O pin has an individual EEPROM bit that controls the slew rate, allowing designers to specify the slew rate on a pin–by–pin basis. The slew rate control affects both the rising and falling edges of the output signal.

Design Security

All MAX 3000A devices contain a programmable security bit that controls access to the data programmed into the device. When this bit is programmed, a design implemented in the device cannot be copied or retrieved. This feature provides a high level of design security because programmed data within EEPROM cells is invisible. The security bit that controls this function, as well as all other programmed data, is reset only when the device is reprogrammed.

Generic Testing

MAX 3000A devices are fully tested. Complete testing of each programmable EEPROM bit and all internal logic elements ensures 100% programming yield. AC test measurements are taken under conditions equivalent to those shown in Figure 8. Test patterns can be used and then erased during early stages of the production flow.

Figure 8. MAX 3000A AC Test Conditions

Power supply transients can affect AC measurements. Simultaneous transitions of multiple outputs should be avoided for accurate measurement. Threshold tests must not be performed under AC conditions. Large–amplitude, fast–ground–current transients normally occur as the device outputs discharge the load capacitances. When these transients flow through the parasitic inductance between the device ground pin and the test system ground, significant reductions in observable noise immunity can result. Numbers in brackets are for 2.5–V outputs. Numbers without brackets are for 3.3–V devices or outputs.

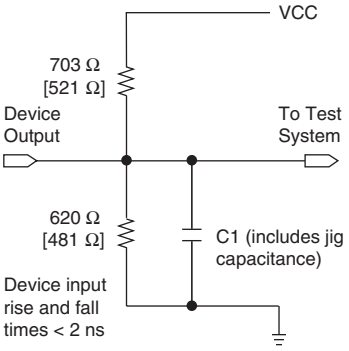

Operating Conditions

Tables 12 through 15 provide information on absolute maximum ratings, recommended operating conditions, DC operating conditions, and capacitance for MAX 3000A devices.

Table 12. MAX 3000A Device Absolute Maximum Ratings *Note (1)*

Symbol	Parameter	Conditions	Min	Max	Unit
V_{CC}	Supply voltage	With respect to ground *(2)*	–0.5	4.6	V
V_I	DC input voltage		–2.0	5.75	V
I_{OUT}	DC output current, per pin		–25	25	mA
T_{STG}	Storage temperature	No bias	–65	150	° C
T_A	Ambient temperature	Under bias	–65	135	° C
T_J	Junction temperature	PQFP and TQFP packages, under bias		135	° C

Table 13. MAX 3000A Device Recommended Operating Conditions

Symbol	Parameter	Conditions	Min	Max	Unit
V_{CCINT}	Supply voltage for internal logic and input buffers	*(10)*	3.0	3.6	V
V_{CCIO}	Supply voltage for output drivers, 3.3–V operation		3.0	3.6	V
	Supply voltage for output drivers, 2.5–V operation		2.3	2.7	V
V_{CCISP}	Supply voltage during ISP		3.0	3.6	V
V_I	Input voltage	*(3)*	–0.5	5.75	V
V_O	Output voltage		0	V_{CCIO}	V
T_A	Ambient temperature	Commercial range	0	70	° C
		Industrial range	–40	85	° C
T_J	Junction temperature	Commercial range	0	90	° C
		Industrial range *(11)*	–40	105	° C
t_R	Input rise time			40	ns
t_F	Input fall time			40	ns

Table 14. MAX 3000A Device DC Operating Conditions *Note (4)*

Symbol	Parameter	Conditions	Min	Max	Unit
V_{IH}	High–level input voltage		1.7	5.75	V
V_{IL}	Low–level input voltage		–0.5	0.8	V
V_{OH}	3.3–V high–level TTL output voltage	I_{OH} = –8 mA DC, V_{CCIO} = 3.00 V *(5)*	2.4		V
	3.3–V high–level CMOS output voltage	I_{OH} = –0.1 mA DC, V_{CCIO} = 3.00 V *(5)*	V_{CCIO} – 0.2		V
	2.5–V high–level output voltage	I_{OH} = –100 µA DC, V_{CCIO} = 2.30 V *(5)*	2.1		V
		I_{OH} = –1 mA DC, V_{CCIO} = 2.30 V *(5)*	2.0		V
		I_{OH} = –2 mA DC, V_{CCIO} = 2.30 V *(5)*	1.7		V
V_{OL}	3.3–V low–level TTL output voltage	I_{OL} = 8 mA DC, V_{CCIO} = 3.00 V *(6)*		0.4	V
	3.3–V low–level CMOS output voltage	I_{OL} = 0.1 mA DC, V_{CCIO} = 3.00 V *(6)*		0.2	V
	2.5–V low–level output voltage	I_{OL} = 100 µA DC, V_{CCIO} = 2.30 V *(6)*		0.2	V
		I_{OL} = 1 mA DC, V_{CCIO} = 2.30 V *(6)*		0.4	V
		I_{OL} = 2 mA DC, V_{CCIO} = 2.30 V *(6)*		0.7	V
I_I	Input leakage current	V_I = –0.5 to 5.5 V *(7)*	–10	10	µA
I_{OZ}	Tri–state output off–state current	V_I = –0.5 to 5.5 V *(7)*	–10	10	µA
R_{ISP}	Value of I/O pin pull–up resistor when programming in–system or during power–up	V_{CCIO} = 2.3 to 3.6 V *(8)*	20	74	kΩ

Table 15. MAX 3000A Device Capacitance *Note (9)*

Symbol	Parameter	Conditions	Min	Max	Unit
C_{IN}	Input pin capacitance	V_{IN} = 0 V, f = 1.0 MHz		8	pF
$C_{I/O}$	I/O pin capacitance	V_{OUT} = 0 V, f = 1.0 MHz		8	pF

Notes to tables:

(1) See the *Operating Requirements for Altera Devices Data Sheet*.

(2) Minimum DC input voltage is –0.5 V. During transitions, the inputs may undershoot to –2.0 V or overshoot to 5.75 V for input currents less than 100 mA and periods shorter than 20 ns.

(3) All pins, including dedicated inputs, I/O pins, and JTAG pins, may be driven before V_{CCINT} and V_{CCIO} are powered.

(4) These values are specified under the recommended operating conditions, as shown in Table 13 on page 23.

(5) The parameter is measured with 50% of the outputs each sourcing the specified current. The I_{OH} parameter refers to high–level TTL or CMOS output current.

(6) The parameter is measured with 50% of the outputs each sinking the specified current. The I_{OL} parameter refers to low–level TTL, PCI, or CMOS output current.

(7) This value is specified during normal device operation. During power-up, the maximum leakage current is ±300 µA.

(8) This pull–up exists while devices are programmed in–system and in unprogrammed devices during power–up.

(9) Capacitance is measured at 25° C and is sample–tested only. The `OE1` pin (high–voltage pin during programming) has a maximum capacitance of 20 pF.

(10) The POR time for all MAX 3000A devices does not exceed 100 µs. The sufficient V_{CCINT} voltage level for POR is 3.0 V. The device is fully initialized within the POR time after V_{CCINT} reaches the sufficient POR voltage level.

(11) These devices support in-system programming for –40° to 100° C. For in-system programming support between –40° and 0° C, contact Altera Applications.

Figure 9 shows the typical output drive characteristics of MAX 3000A devices.

Figure 9. Output Drive Characteristics of MAX 3000A Devices

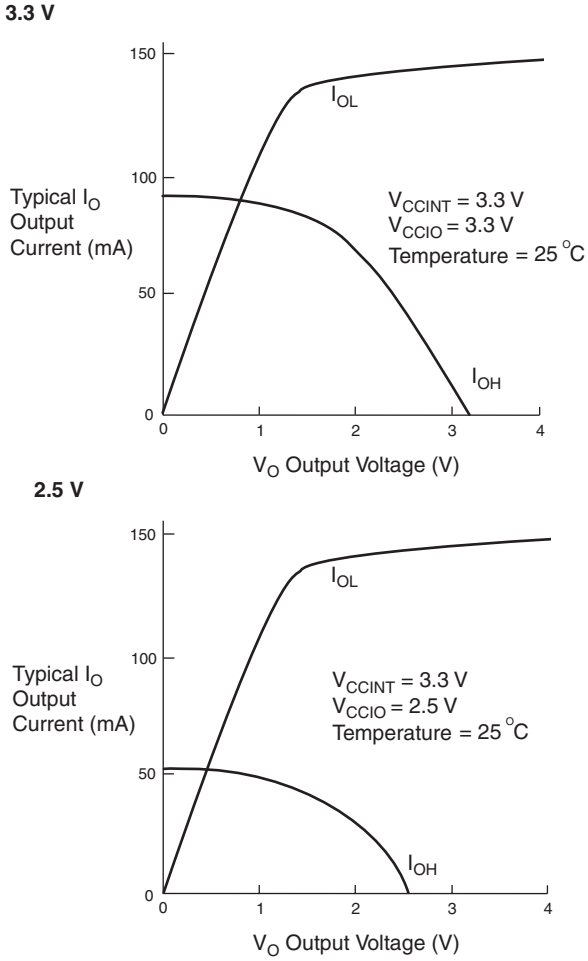

Power Sequencing & Hot–Socketing

Because MAX 3000A devices can be used in a mixed–voltage environment, they have been designed specifically to tolerate any possible power–up sequence. The V_{CCIO} and V_{CCINT} power planes can be powered in any order.

Signals can be driven into MAX 3000A devices before and during power-up without damaging the device. In addition, MAX 3000A devices do not drive out during power-up. Once operating conditions are reached, MAX 3000A devices operate as specified by the user.

Timing Model

MAX 3000A device timing can be analyzed with the Altera software, with a variety of popular industry–standard EDA simulators and timing analyzers, or with the timing model shown in Figure 10. MAX 3000A devices have predictable internal delays that enable the designer to determine the worst–case timing of any design. The software provides timing simulation, point–to–point delay prediction, and detailed timing analysis for device–wide performance evaluation.

Figure 10. MAX 3000A Timing Model

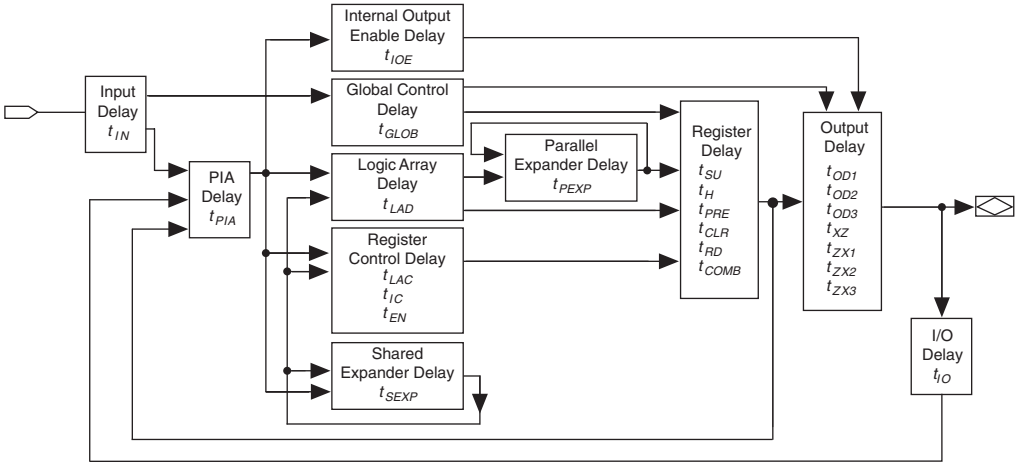

The timing characteristics of any signal path can be derived from the timing model and parameters of a particular device. External timing parameters, which represent pin–to–pin timing delays, can be calculated as the sum of internal parameters. Figure 11 shows the timing relationship between internal and external delay parameters.

Figure 11. MAX 3000A Switching Waveforms

t_R & t_F < 2 ns. Inputs are driven at 3 V for a logic high and 0 V for a logic low. All timing characteristics are measured at 1.5 V.

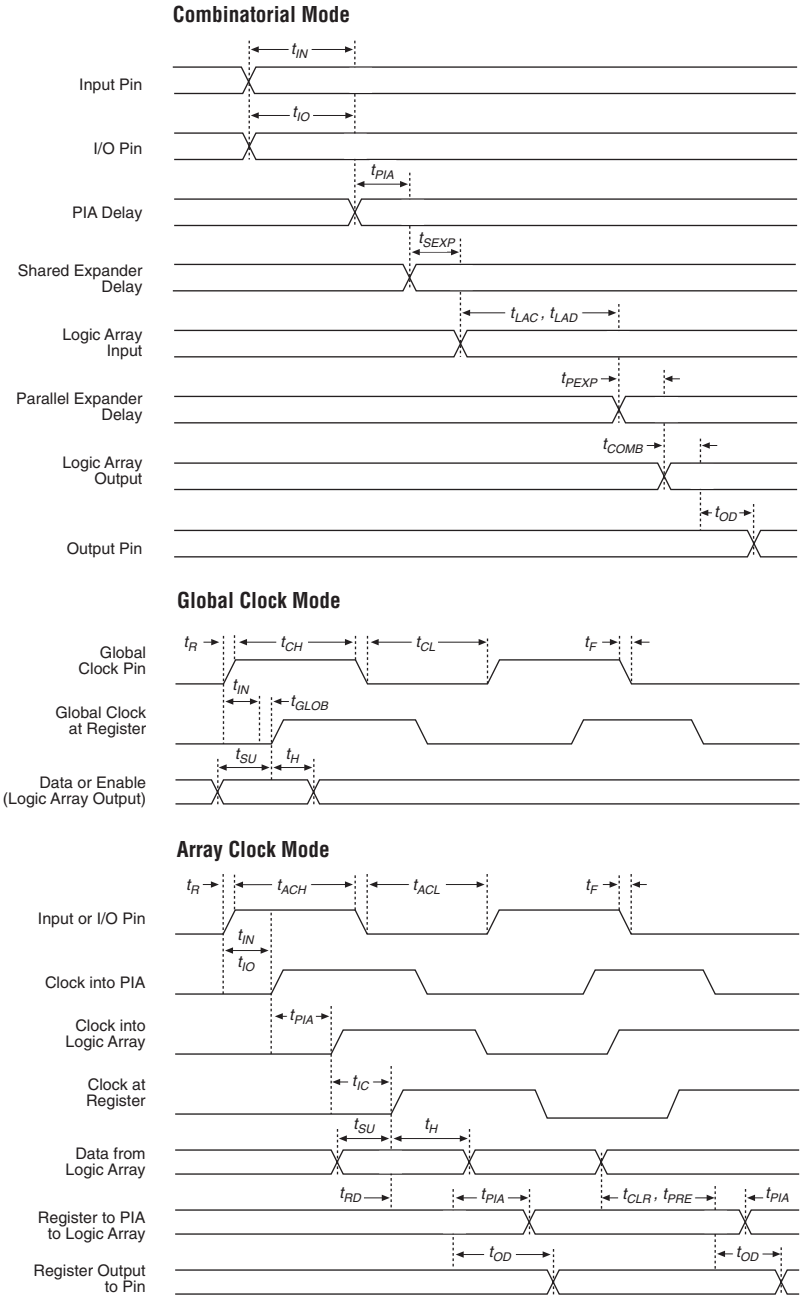

Tables 16 through 23 show EPM3032A, EPM3064A, EPM3128A, EPM3256A, and EPM3512A timing information.

Table 16. EPM3032A External Timing Parameters *Note (1)*

Symbol	Parameter	Conditions	Speed Grade						Unit
			–4		–7		–10		
			Min	Max	Min	Max	Min	Max	
t_{PD1}	Input to non–registered output	C1 = 35 pF *(2)*		4.5		7.5		10	ns
t_{PD2}	I/O input to non–registered output	C1 = 35 pF *(2)*		4.5		7.5		10	ns
t_{SU}	Global clock setup time	*(2)*	2.9		4.7		6.3		ns
t_{H}	Global clock hold time	*(2)*	0.0		0.0		0.0		ns
t_{CO1}	Global clock to output delay	C1 = 35 pF	1.0	3.0	1.0	5.0	1.0	6.7	ns
t_{CH}	Global clock high time		2.0		3.0		4.0		ns
t_{CL}	Global clock low time		2.0		3.0		4.0		ns
t_{ASU}	Array clock setup time	*(2)*	1.6		2.5		3.6		ns
t_{AH}	Array clock hold time	*(2)*	0.3		0.5		0.5		ns
t_{ACO1}	Array clock to output delay	C1 = 35 pF *(2)*	1.0	4.3	1.0	7.2	1.0	9.4	ns
t_{ACH}	Array clock high time		2.0		3.0		4.0		ns
t_{ACL}	Array clock low time		2.0		3.0		4.0		ns
t_{CPPW}	Minimum pulse width for clear and preset	*(3)*	2.0		3.0		4.0		ns
t_{CNT}	Minimum global clock period	*(2)*		4.4		7.2		9.7	ns
f_{CNT}	Maximum internal global clock frequency	*(2)*, *(4)*	227.3		138.9		103.1		MHz
t_{ACNT}	Minimum array clock period	*(2)*		4.4		7.2		9.7	ns
f_{ACNT}	Maximum internal array clock frequency	*(2)*, *(4)*	227.3		138.9		103.1		MHz

Table 17. EPM3032A Internal Timing Parameters (Part 1 of 2) *Note (1)*

Symbol	Parameter	Conditions	Speed Grade						Unit
			–4		–7		–10		
			Min	Max	Min	Max	Min	Max	
t_{IN}	Input pad and buffer delay			0.7		1.2		1.5	ns
t_{IO}	I/O input pad and buffer delay			0.7		1.2		1.5	ns
t_{SEXP}	Shared expander delay			1.9		3.1		4.0	ns
t_{PEXP}	Parallel expander delay			0.5		0.8		1.0	ns
t_{LAD}	Logic array delay			1.5		2.5		3.3	ns
t_{LAC}	Logic control array delay			0.6		1.0		1.2	ns
t_{IOE}	Internal output enable delay			0.0		0.0		0.0	ns
t_{OD1}	Output buffer and pad delay, slow slew rate = off V_{CCIO} = 3.3 V	C1 = 35 pF		0.8		1.3		1.8	ns
t_{OD2}	Output buffer and pad delay, slow slew rate = off V_{CCIO} = 2.5 V	C1 = 35 pF		1.3		1.8		2.3	ns
t_{OD3}	Output buffer and pad delay, slow slew rate = on V_{CCIO} = 2.5 V or 3.3 V	C1 = 35 pF		5.8		6.3		6.8	ns
t_{ZX1}	Output buffer enable delay, slow slew rate = off V_{CCIO} = 3.3 V	C1 = 35 pF		4.0		4.0		5.0	ns
t_{ZX2}	Output buffer enable delay, slow slew rate = off V_{CCIO} = 2.5 V	C1 = 35 pF		4.5		4.5		5.5	ns
t_{ZX3}	Output buffer enable delay, slow slew rate = on V_{CCIO} = 2.5 V or 3.3 V	C1 = 35 pF		9.0		9.0		10.0	ns
t_{XZ}	Output buffer disable delay	C1 = 5 pF		4.0		4.0		5.0	ns
t_{SU}	Register setup time		1.3		2.0		2.8		ns
t_{H}	Register hold time		0.6		1.0		1.3		ns
t_{RD}	Register delay			0.7		1.2		1.5	ns
t_{COMB}	Combinatorial delay			0.6		1.0		1.3	ns
t_{IC}	Array clock delay			1.2		2.0		2.5	ns
t_{EN}	Register enable time			0.6		1.0		1.2	ns
t_{GLOB}	Global control delay			0.8		1.3		1.9	ns
t_{PRE}	Register preset time			1.2		1.9		2.6	ns
t_{CLR}	Register clear time			1.2		1.9		2.6	ns

Table 17. EPM3032A Internal Timing Parameters (Part 2 of 2) *Note (1)*

Symbol	Parameter	Conditions	Speed Grade						Unit
			–4		–7		–10		
			Min	Max	Min	Max	Min	Max	
t_{PIA}	PIA delay	*(2)*		0.9		1.5		2.1	ns
t_{LPA}	Low–power adder	*(5)*		2.5		4.0		5.0	ns

Table 18. EPM3064A External Timing Parameters *Note (1)*

Symbol	Parameter	Conditions	Speed Grade						Unit
			–4		–7		–10		
			Min	Max	Min	Max	Min	Max	
t_{PD1}	Input to non–registered output	C1 = 35 pF *(2)*		4.5		7.5		10.0	ns
t_{PD2}	I/O input to non–registered output	C1 = 35 pF *(2)*		4.5		7.5		10.0	ns
t_{SU}	Global clock setup time	*(2)*	2.8		4.7		6.2		ns
t_{H}	Global clock hold time	*(2)*	0.0		0.0		0.0		ns
t_{CO1}	Global clock to output delay	C1 = 35 pF	1.0	3.1	1.0	5.1	1.0	7.0	ns
t_{CH}	Global clock high time		2.0		3.0		4.0		ns
t_{CL}	Global clock low time		2.0		3.0		4.0		ns
t_{ASU}	Array clock setup time	*(2)*	1.6		2.6		3.6		ns
t_{AH}	Array clock hold time	*(2)*	0.3		0.4		0.6		ns
t_{ACO1}	Array clock to output delay	C1 = 35 pF *(2)*	1.0	4.3	1.0	7.2	1.0	9.6	ns
t_{ACH}	Array clock high time		2.0		3.0		4.0		ns
t_{ACL}	Array clock low time		2.0		3.0		4.0		ns
t_{CPPW}	Minimum pulse width for clear and preset	*(3)*	2.0		3.0		4.0		ns
t_{CNT}	Minimum global clock period	*(2)*		4.5		7.4		10.0	ns
f_{CNT}	Maximum internal global clock frequency	*(2)*, *(4)*	222.2		135.1		100.0		MHz
t_{ACNT}	Minimum array clock period	*(2)*		4.5		7.4		10.0	ns
f_{ACNT}	Maximum internal array clock frequency	*(2)*, *(4)*	222.2		135.1		100.0		MHz

Table 19. EPM3064A Internal Timing Parameters (Part 1 of 2) *Note (1)*

Symbol	Parameter	Conditions	Speed Grade						Unit
			–4		–7		–10		
			Min	Max	Min	Max	Min	Max	
t_{IN}	Input pad and buffer delay			0.6		1.1		1.4	ns
t_{IO}	I/O input pad and buffer delay			0.6		1.1		1.4	ns
t_{SEXP}	Shared expander delay			1.8		3.0		3.9	ns
t_{PEXP}	Parallel expander delay			0.4		0.7		0.9	ns
t_{LAD}	Logic array delay			1.5		2.5		3.2	ns
t_{LAC}	Logic control array delay			0.6		1.0		1.2	ns
t_{IOE}	Internal output enable delay			0.0		0.0		0.0	ns
t_{OD1}	Output buffer and pad delay, slow slew rate = off V_{CCIO} = 3.3 V	C1 = 35 pF		0.8		1.3		1.8	ns
t_{OD2}	Output buffer and pad delay, slow slew rate = off V_{CCIO} = 2.5 V	C1 = 35 pF		1.3		1.8		2.3	ns
t_{OD3}	Output buffer and pad delay, slow slew rate = on V_{CCIO} = 2.5 V or 3.3 V	C1 = 35 pF		5.8		6.3		6.8	ns
t_{ZX1}	Output buffer enable delay, slow slew rate = off V_{CCIO} = 3.3 V	C1 = 35 pF		4.0		4.0		5.0	ns
t_{ZX2}	Output buffer enable delay, slow slew rate = off V_{CCIO} = 2.5 V	C1 = 35 pF		4.5		4.5		5.5	ns
t_{ZX3}	Output buffer enable delay, slow slew rate = on V_{CCIO} = 2.5 V or 3.3 V	C1 = 35 pF		9.0		9.0		10.0	ns
t_{XZ}	Output buffer disable delay	C1 = 5 pF		4.0		4.0		5.0	ns
t_{SU}	Register setup time		1.3		2.0		2.9		ns
t_{H}	Register hold time		0.6		1.0		1.3		ns
t_{RD}	Register delay			0.7		1.2		1.6	ns
t_{COMB}	Combinatorial delay			0.6		0.9		1.3	ns
t_{IC}	Array clock delay			1.2		1.9		2.5	ns
t_{EN}	Register enable time			0.6		1.0		1.2	ns
t_{GLOB}	Global control delay			1.0		1.5		2.2	ns
t_{PRE}	Register preset time			1.3		2.1		2.9	ns

Table 19. EPM3064A Internal Timing Parameters (Part 2 of 2) *Note (1)*

Symbol	Parameter	Conditions	Speed Grade						Unit
			–4		–7		–10		
			Min	Max	Min	Max	Min	Max	
t_{CLR}	Register clear time			1.3		2.1		2.9	ns
t_{PIA}	PIA delay	*(2)*		1.0		1.7		2.3	ns
t_{LPA}	Low–power adder	*(5)*		3.5		4.0		5.0	ns

Table 20. EPM3128A External Timing Parameters *Note (1)*

Symbol	Parameter	Conditions	Speed Grade						Unit
			–5		–7		–10		
			Min	Max	Min	Max	Min	Max	
t_{PD1}	Input to non–registered output	C1 = 35 pF *(2)*		5.0		7.5		10	ns
t_{PD2}	I/O input to non–registered output	C1 = 35 pF *(2)*		5.0		7.5		10	ns
t_{SU}	Global clock setup time	*(2)*	3.3		4.9		6.6		ns
t_{H}	Global clock hold time	*(2)*	0.0		0.0		0.0		ns
t_{CO1}	Global clock to output delay	C1 = 35 pF	1.0	3.4	1.0	5.0	1.0	6.6	ns
t_{CH}	Global clock high time		2.0		3.0		4.0		ns
t_{CL}	Global clock low time		2.0		3.0		4.0		ns
t_{ASU}	Array clock setup time	*(2)*	1.8		2.8		3.8		ns
t_{AH}	Array clock hold time	*(2)*	0.2		0.3		0.4		ns
t_{ACO1}	Array clock to output delay	C1 = 35 pF *(2)*	1.0	4.9	1.0	7.1	1.0	9.4	ns
t_{ACH}	Array clock high time		2.0		3.0		4.0		ns
t_{ACL}	Array clock low time		2.0		3.0		4.0		ns
t_{CPPW}	Minimum pulse width for clear and preset	*(3)*	2.0		3.0		4.0		ns
t_{CNT}	Minimum global clock period	*(2)*		5.2		7.7		10.2	ns
f_{CNT}	Maximum internal global clock frequency	*(2)*, *(4)*	192.3		129.9		98.0		MHz
t_{ACNT}	Minimum array clock period	*(2)*		5.2		7.7		10.2	ns

Table 20. EPM3128A External Timing Parameters *Note (1)*

Symbol	Parameter	Conditions	Speed Grade						Unit
			–5		–7		–10		
			Min	Max	Min	Max	Min	Max	
f_{ACNT}	Maximum internal array clock frequency	*(2)*, *(4)*	192.3		129.9		98.0		MHz

Table 21. EPM3128A Internal Timing Parameters (Part 1 of 2) *Note (1)*

Symbol	Parameter	Conditions	Speed Grade						Unit
			–5		–7		–10		
			Min	Max	Min	Max	Min	Max	
t_{IN}	Input pad and buffer delay			0.7		1.0		1.4	ns
t_{IO}	I/O input pad and buffer delay			0.7		1.0		1.4	ns
t_{SEXP}	Shared expander delay			2.0		2.9		3.8	ns
t_{PEXP}	Parallel expander delay			0.4		0.7		0.9	ns
t_{LAD}	Logic array delay			1.6		2.4		3.1	ns
t_{LAC}	Logic control array delay			0.7		1.0		1.3	ns
t_{IOE}	Internal output enable delay			0.0		0.0		0.0	ns
t_{OD1}	Output buffer and pad delay, slow slew rate = off V_{CCIO} = 3.3 V	C1 = 35 pF		0.8		1.2		1.6	ns
t_{OD2}	Output buffer and pad delay, slow slew rate = off V_{CCIO} = 2.5 V	C1 = 35 pF		1.3		1.7		2.1	ns
t_{OD3}	Output buffer and pad delay, slow slew rate = on V_{CCIO} = 2.5 V or 3.3 V	C1 = 35 pF		5.8		6.2		6.6	ns
t_{ZX1}	Output buffer enable delay, slow slew rate = off V_{CCIO} = 3.3 V	C1 = 35 pF		4.0		4.0		5.0	ns
t_{ZX2}	Output buffer enable delay, slow slew rate = off V_{CCIO} = 2.5 V	C1 = 35 pF		4.5		4.5		5.5	ns
t_{ZX3}	Output buffer enable delay, slow slew rate = on V_{CCIO} = 2.5 V or 3.3 V	C1 = 35 pF		9.0		9.0		10.0	ns
t_{XZ}	Output buffer disable delay	C1 = 5 pF		4.0		4.0		5.0	ns

Table 21. EPM3128A Internal Timing Parameters (Part 2 of 2) *Note (1)*

Symbol	Parameter	Conditions	Speed Grade						Unit
			–5		–7		–10		
			Min	Max	Min	Max	Min	Max	
t_{SU}	Register setup time		1.4		2.1		2.9		ns
t_{H}	Register hold time		0.6		1.0		1.3		ns
t_{RD}	Register delay			0.8		1.2		1.6	ns
t_{COMB}	Combinatorial delay			0.5		0.9		1.3	ns
t_{IC}	Array clock delay			1.2		1.7		2.2	ns
t_{EN}	Register enable time			0.7		1.0		1.3	ns
t_{GLOB}	Global control delay			1.1		1.6		2.0	ns
t_{PRE}	Register preset time			1.4		2.0		2.7	ns
t_{CLR}	Register clear time			1.4		2.0		2.7	ns
t_{PIA}	PIA delay	*(2)*		1.4		2.0		2.6	ns
t_{LPA}	Low–power adder	*(5)*		4.0		4.0		5.0	ns

Table 22. EPM3256A External Timing Parameters *Note (1)*

Symbol	Parameter	Conditions	Speed Grade				Unit
			–7		–10		
			Min	Max	Min	Max	
t_{PD1}	Input to non–registered output	C1 = 35 pF *(2)*		7.5		10	ns
t_{PD2}	I/O input to non–registered output	C1 = 35 pF *(2)*		7.5		10	ns
t_{SU}	Global clock setup time	*(2)*	5.2		6.9		ns
t_{H}	Global clock hold time	*(2)*	0.0		0.0		ns
t_{CO1}	Global clock to output delay	C1 = 35 pF	1.0	4.8	1.0	6.4	ns
t_{CH}	Global clock high time		3.0		4.0		ns
t_{CL}	Global clock low time		3.0		4.0		ns
t_{ASU}	Array clock setup time	*(2)*	2.7		3.6		ns
t_{AH}	Array clock hold time	*(2)*	0.3		0.5		ns
t_{ACO1}	Array clock to output delay	C1 = 35 pF *(2)*	1.0	7.3	1.0	9.7	ns
t_{ACH}	Array clock high time		3.0		4.0		ns
t_{ACL}	Array clock low time		3.0		4.0		ns
t_{CPPW}	Minimum pulse width for clear and preset	*(3)*	3.0		4.0		ns

Table 22. EPM3256A External Timing Parameters *Note (1)*

Symbol	Parameter	Conditions	Speed Grade				Unit
			–7		–10		
			Min	Max	Min	Max	
t_{CNT}	Minimum global clock period	*(2)*		7.9		10.5	ns
f_{CNT}	Maximum internal global clock frequency	*(2)*, *(4)*	126.6		95.2		MHz
t_{ACNT}	Minimum array clock period	*(2)*		7.9		10.5	ns
f_{ACNT}	Maximum internal array clock frequency	*(2)*, *(4)*	126.6		95.2		MHz

Table 23. EPM3256A Internal Timing Parameters (Part 1 of 2) *Note (1)*

Symbol	Parameter	Conditions	Speed Grade				Unit
			–7		–10		
			Min	Max	Min	Max	
t_{IN}	Input pad and buffer delay			0.9		1.2	ns
t_{IO}	I/O input pad and buffer delay			0.9		1.2	ns
t_{SEXP}	Shared expander delay			2.8		3.7	ns
t_{PEXP}	Parallel expander delay			0.5		0.6	ns
t_{LAD}	Logic array delay			2.2		2.8	ns
t_{LAC}	Logic control array delay			1.0		1.3	ns
t_{IOE}	Internal output enable delay			0.0		0.0	ns
t_{OD1}	Output buffer and pad delay, slow slew rate = off V_{CCIO} = 3.3 V	C1 = 35 pF		1.2		1.6	ns
t_{OD2}	Output buffer and pad delay, slow slew rate = off V_{CCIO} = 2.5 V	C1 = 35 pF		1.7		2.1	ns
t_{OD3}	Output buffer and pad delay, slow slew rate = on V_{CCIO} = 2.5 V or 3.3 V	C1 = 35 pF		6.2		6.6	ns
t_{ZX1}	Output buffer enable delay, slow slew rate = off V_{CCIO} = 3.3 V	C1 = 35 pF		4.0		5.0	ns
t_{ZX2}	Output buffer enable delay, slow slew rate = off V_{CCIO} = 2.5 V	C1 = 35 pF		4.5		5.5	ns

Table 23. EPM3256A Internal Timing Parameters (Part 2 of 2) *Note (1)*

Symbol	Parameter	Conditions	Speed Grade				Unit
			–7		–10		
			Min	Max	Min	Max	
t_{ZX3}	Output buffer enable delay, slow slew rate = on V_{CCIO} = 2.5 V or 3.3 V	C1 = 35 pF		9.0		10.0	ns
t_{XZ}	Output buffer disable delay	C1 = 5 pF		4.0		5.0	ns
t_{SU}	Register setup time		2.1		2.9		ns
t_{H}	Register hold time		0.9		1.2		ns
t_{RD}	Register delay			1.2		1.6	ns
t_{COMB}	Combinatorial delay			0.8		1.2	ns
t_{IC}	Array clock delay			1.6		2.1	ns
t_{EN}	Register enable time			1.0		1.3	ns
t_{GLOB}	Global control delay			1.5		2.0	ns
t_{PRE}	Register preset time			2.3		3.0	ns
t_{CLR}	Register clear time			2.3		3.0	ns
t_{PIA}	PIA delay	*(2)*		2.4		3.2	ns
t_{LPA}	Low–power adder	*(5)*		4.0		5.0	ns

Table 24. EPM3512A External Timing Parameters *Note (1)*

Symbol	Parameter	Conditions	Speed Grade				Unit
			-7		-10		
			Min	Max	Min	Max	
t_{PD1}	Input to non-registered output	C1 = 35 pF *(2)*		7.5		10.0	ns
t_{PD2}	I/O input to non-registered output	C1 = 35 pF *(2)*		7.5		10.0	ns
t_{SU}	Global clock setup time	*(2)*	5.6		7.6		ns
t_{H}	Global clock hold time	*(2)*	0.0		0.0		ns
t_{FSU}	Global clock setup time of fast input		3.0		3.0		ns
t_{FH}	Global clock hold time of fast input		0.0		0.0		ns
t_{CO1}	Global clock to output delay	C1 = 35 pF	1.0	4.7	1.0	6.3	ns
t_{CH}	Global clock high time		3.0		4.0		ns
t_{CL}	Global clock low time		3.0		4.0		ns
t_{ASU}	Array clock setup time	*(2)*	2.5		3.5		ns

Table 24. EPM3512A External Timing Parameters *Note (1)*

Symbol	Parameter	Conditions	Speed Grade				Unit
			-7		-10		
			Min	Max	Min	Max	
t_{AH}	Array clock hold time	*(2)*	0.2		0.3		ns
t_{ACO1}	Array clock to output delay	C1 = 35 pF *(2)*	1.0	7.8	1.0	10.4	ns
t_{ACH}	Array clock high time		3.0		4.0		ns
t_{ACL}	Array clock low time		3.0		4.0		ns
t_{CPPW}	Minimum pulse width for clear and preset	*(3)*	3.0		4.0		ns
t_{CNT}	Minimum global clock period	*(2)*		8.6		11.5	ns
f_{CNT}	Maximum internal global clock frequency	*(2)*, *(4)*	116.3		87.0		MHz
t_{ACNT}	Minimum array clock period	*(2)*		8.6		11.5	ns
f_{ACNT}	Maximum internal array clock frequency	*(2)*, *(4)*	116.3		87.0		MHz

Table 25. EPM3512A Internal Timing Parameters (Part 1 of 2) *Note (1)*

Symbol	Parameter	Conditions	Speed Grade				Unit
			-7		-10		
			Min	Max	Min	Max	
t_{IN}	Input pad and buffer delay			0.7		0.9	ns
t_{IO}	I/O input pad and buffer delay			0.7		0.9	ns
t_{FIN}	Fast input delay			3.1		3.6	ns
t_{SEXP}	Shared expander delay			2.7		3.5	ns
t_{PEXP}	Parallel expander delay			0.4		0.5	ns
t_{LAD}	Logic array delay			2.2		2.8	ns
t_{LAC}	Logic control array delay			1.0		1.3	ns
t_{IOE}	Internal output enable delay			0.0		0.0	ns
t_{OD1}	Output buffer and pad delay, slow slew rate = off V_{CCIO} = 3.3 V	C1 = 35 pF		1.0		1.5	ns
t_{OD2}	Output buffer and pad delay, slow slew rate = off V_{CCIO} = 2.5 V	C1 = 35 pF		1.5		2.0	ns

Table 25. EPM3512A Internal Timing Parameters (Part 2 of 2) *Note (1)*

Symbol	Parameter	Conditions	Speed Grade				Unit
			-7		-10		
			Min	Max	Min	Max	
t_{OD3}	Output buffer and pad delay, slow slew rate = on V_{CCIO} = 2.5 V or 3.3 V	C1 = 35 pF		6.0		6.5	ns
t_{ZX1}	Output buffer enable delay, slow slew rate = off V_{CCIO} = 3.3 V	C1 = 35 pF		4.0		5.0	ns
t_{ZX2}	Output buffer enable delay, slow slew rate = off V_{CCIO} = 2.5 V	C1 = 35 pF		4.5		5.5	ns
t_{ZX3}	Output buffer enable delay, slow slew rate = on V_{CCIO} = 3.3 V	C1 = 35 pF		9.0		10.0	ns
t_{XZ}	Output buffer disable delay	C1 = 5 pF		4.0		5.0	ns
t_{SU}	Register setup time		2.1		3.0		ns
t_{H}	Register hold time		0.6		0.8		ns
t_{FSU}	Register setup time of fast input		1.6		1.6		ns
t_{FH}	Register hold time of fast input		1.4		1.4		ns
t_{RD}	Register delay			1.3		1.7	ns
t_{COMB}	Combinatorial delay			0.6		0.8	ns
t_{IC}	Array clock delay			1.8		2.3	ns
t_{EN}	Register enable time			1.0		1.3	ns
t_{GLOB}	Global control delay			1.7		2.2	ns
t_{PRE}	Register preset time			1.0		1.4	ns
t_{CLR}	Register clear time			1.0		1.4	ns
t_{PIA}	PIA delay	*(2)*		3.0		4.0	ns
t_{LPA}	Low-power adder	*(5)*		4.5		5.0	ns

Notes to tables:

(1) These values are specified under the recommended operating conditions, as shown in Table 13 on page 23. See Figure 11 on page 27 for more information on switching waveforms.

(2) These values are specified for a PIA fan–out of one LAB (16 macrocells). For each additional LAB fan–out in these devices, add an additional 0.1 ns to the PIA timing value.

(3) This minimum pulse width for preset and clear applies for both global clear and array controls. The t_{LPA} parameter must be added to this minimum width if the clear or reset signal incorporates the t_{LAD} parameter into the signal path.

(4) These parameters are measured with a 16–bit loadable, enabled, up/down counter programmed into each LAB.

(5) The t_{LPA} parameter must be added to the t_{LAD}, t_{LAC}, t_{IC}, t_{EN}, t_{SEXP}, $\mathbf{t_{ACL}}$, and $\mathbf{t_{CPPW}}$ parameters for macrocells running in low–power mode.

Power Consumption

Supply power (P) versus frequency ($\mathbf{f_{MAX}}$, in MHz) for MAX 3000A devices is calculated with the following equation:

$$P = P_{INT} + P_{IO} = I_{CCINT} \times V_{CC} + P_{IO}$$

The P_{IO} value, which depends on the device output load characteristics and switching frequency, can be calculated using the guidelines given in *Application Note 74 (Evaluating Power for Altera Devices)*.

The I_{CCINT} value depends on the switching frequency and the application logic. The I_{CCINT} value is calculated with the following equation:

$$I_{CCINT} =$$

$$(A \times MC_{TON}) + [B \times (MC_{DEV} - MC_{TON})] + (C \times MC_{USED} \times \mathbf{f_{MAX}} \times \mathbf{tog_{LC}})$$

The parameters in the I_{CCINT} equation are:

MC_{TON}	=	Number of macrocells with the Turbo Bit™ option turned on, as reported in the Quartus II or MAX+PLUS II Report File (**.rpt**)
MC_{DEV}	=	Number of macrocells in the device
MC_{USED}	=	Total number of macrocells in the design, as reported in the RPT File
$\mathbf{f_{MAX}}$	=	Highest clock frequency to the device
$\mathbf{tog_{LC}}$	=	Average percentage of logic cells toggling at each clock (typically 12.5%)
A, B, C	=	Constants (shown in Table 26)

Table 26. MAX 3000A I_{CC} Equation Constants

Device	A	B	C
EPM3032A	0.71	0.30	0.014
EPM3064A	0.71	0.30	0.014
EPM3128A	0.71	0.30	0.014
EPM3256A	0.71	0.30	0.014
EPM3512A	0.71	0.30	0.014

The I_{CCINT} calculation provides an I_{CC} estimate based on typical conditions using a pattern of a 16–bit, loadable, enabled, up/down counter in each LAB with no output load. Actual I_{CC} should be verified during operation because this measurement is sensitive to the actual pattern in the device and the environmental operating conditions.

Figures 12 and 13 show the typical supply current versus frequency for MAX 3000A devices.

Figure 12. I_{CC} vs. Frequency for MAX 3000A Devices

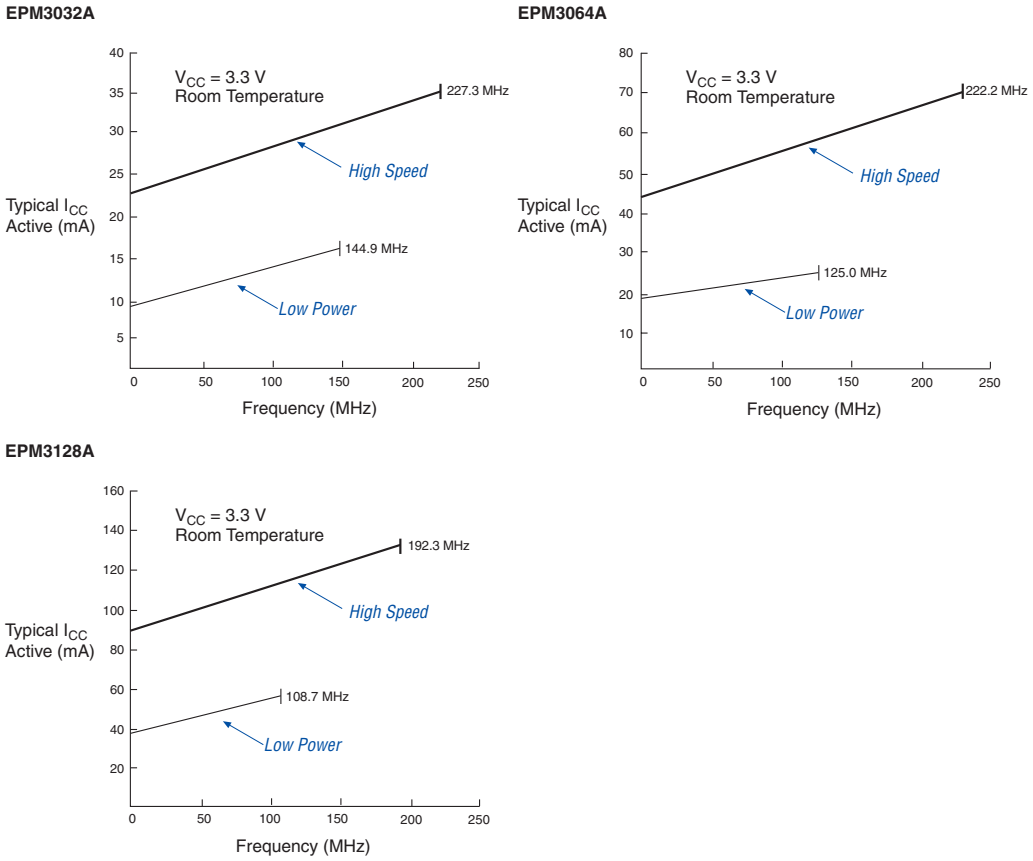

Figure 13. I_{CC} vs. Frequency for MAX 3000A Devices

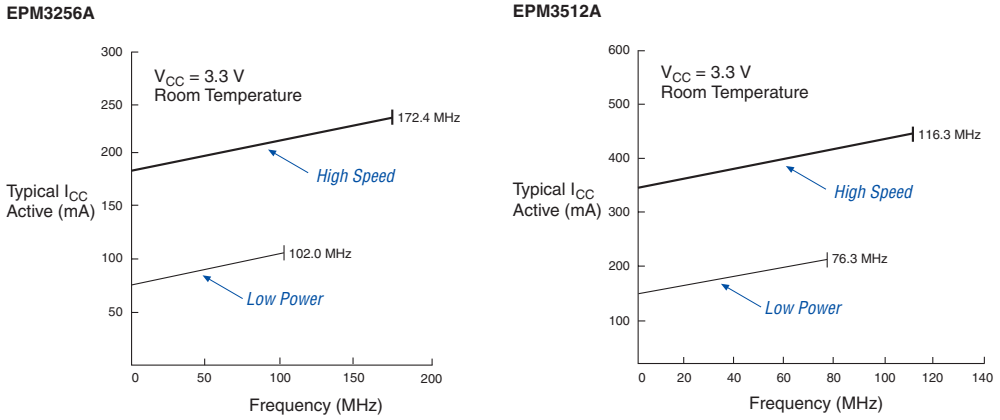

Device Pin–Outs

See the Altera web site (**http://www.altera.com**) or the *Altera Digital Library* for pin–out information.

Figures 14 through 18 show the package pin–out diagrams for MAX 3000A devices.

Figure 14. 44–Pin PLCC/TQFP Package Pin–Out Diagram

Package outlines not drawn to scale.

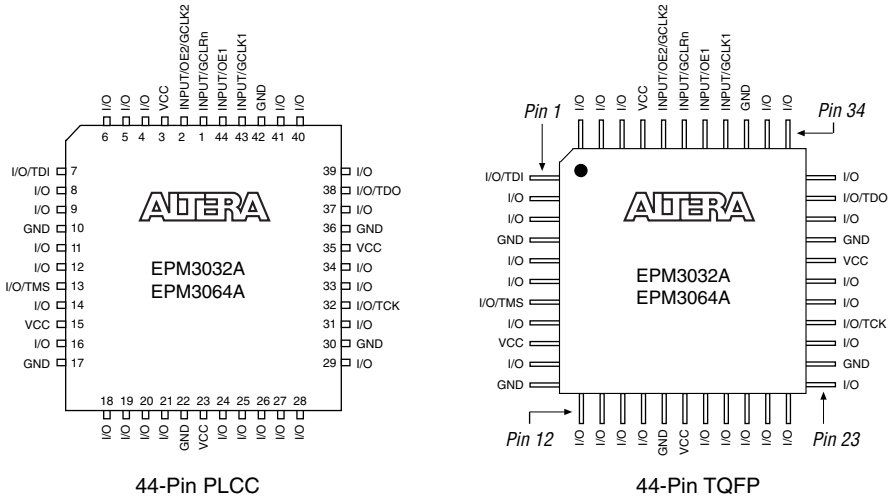

Figure 15. 100–Pin TQFP Package Pin–Out Diagram

Package outline not drawn to scale.

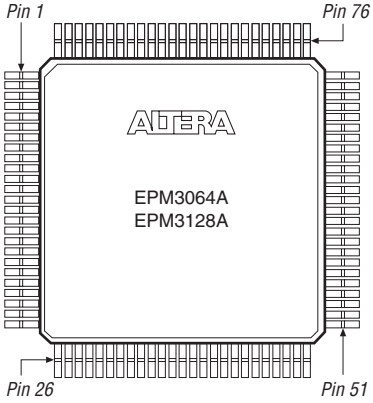

Figure 16. 144–Pin TQFP Package Pin–Out Diagram

Package outline not drawn to scale.

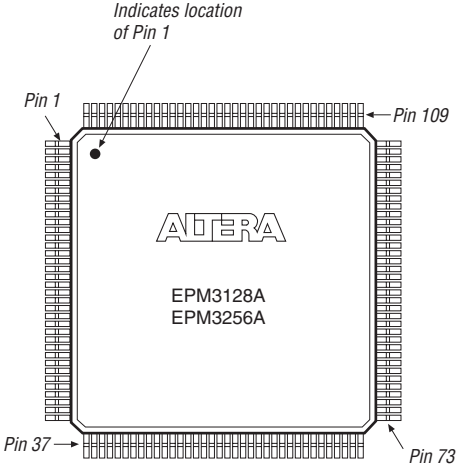

Figure 17. 208–Pin PQFP Package Pin–Out Diagram

Package outline not drawn to scale.

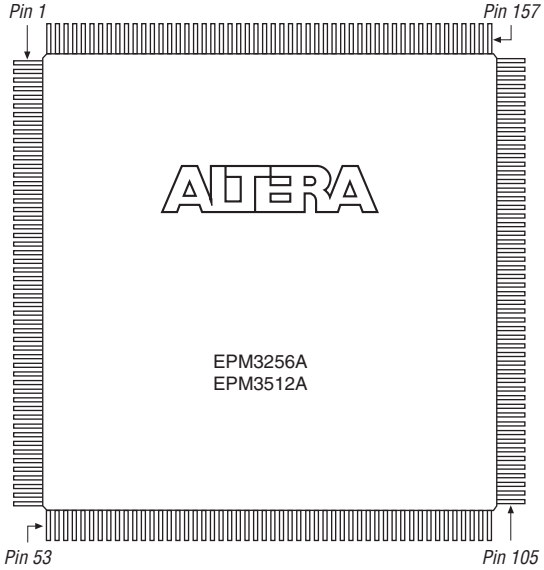

Figure 18. 256-Pin FineLine BGA Package Pin-Out Diagram

Package outline not drawn to scale.

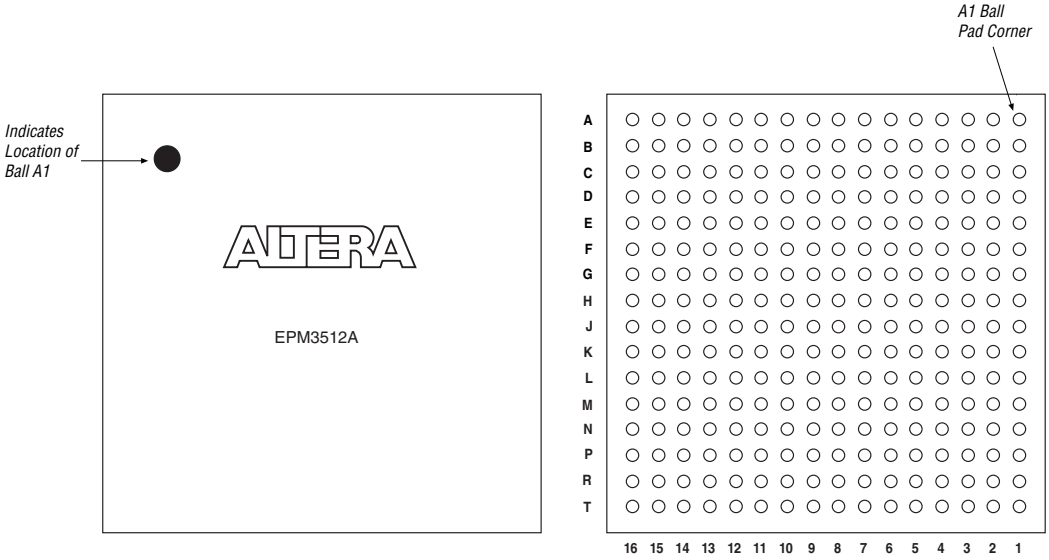

Revision History

The information contained in the *MAX 3000A Programmable Logic Device Data Sheet* version 3.5 supersedes information published in previous versions. The following changes were made in the *MAX 3000A Programmable Logic Device Data Sheet* version 3.5:

Version 3.5

The following changes were made in the *MAX 3000A Programmable Logic Device Data Sheet* version 3.5:

- New paragraph added before "Expander Product Terms".

Version 3.4

The following changes were made in the *MAX 3000A Programmable Logic Device Data Sheet* version 3.4:

- Updated Table 1.

Version 3.3

The following changes were made in the *MAX 3000A Programmable Logic Device Data Sheet* version 3.3:

- Updated Tables 3, 13, and 26.
- Added Tables 4 through 6.
- Updated Figures 12 and 13.
- Added "Programming Sequence" on page 14 and "Programming Times" on page 14

Version 3.2

The following change were made in the *MAX 3000A Programmable Logic Device Data Sheet* version 3.2:

- Updated the EPM3512 I_{CC} versus frequency graph in Figure 13.

Version 3.1

The following changes were made in the *MAX 3000A Programmable Logic Device Data Sheet* version 3.1:

- Updated timing information in Table 1 for the EPM3256A device.
- Updated *Note (10)* of Table 15.

Version 3.0

The following changes were made in the *MAX 3000A Programmable Logic Device Data Sheet* version 3.0:

- Added EPM3512A device.
- Updated Tables 2 and 3.

101 Innovation Drive
San Jose, CA 95134
(408) 544-7000
http://www.altera.com
Applications Hotline:
(800) 800-EPLD
Customer Marketing:
(408) 544-7104
Literature Services:
lit_req@altera.com

Copyright © 2006 Altera Corporation. All rights reserved. Altera, The Programmable Solutions Company, the stylized Altera logo, specific device designations, and all other words and logos that are identified as trademarks and/or service marks are, unless noted otherwise, the trademarks and service marks of Altera Corporation in the U.S. and other countries. All other product or service names are the property of their respective holders. Altera products are protected under numerous U.S. and foreign patents and pending applications, maskwork rights, and copyrights. Altera warrants performance of its semiconductor products to current specifications in accordance with Altera's standard warranty, but reserves the right to make changes to any products and services at any time without notice. Altera assumes no responsibility or liability arising out of the application or use of any information, product, or service described herein except as expressly agreed to in writing by Altera Corporation. Altera customers are advised to obtain the latest version of device specifications before relying on any published information and before placing orders for products or services

I.S. EN ISO 9001

OCEAN CHIPS
Океан Электроники
Поставка электронных компонентов

Компания «Океан Электроники» предлагает заключение долгосрочных отношений при поставках импортных электронных компонентов на взаимовыгодных условиях!

Наши преимущества:

- Поставка оригинальных импортных электронных компонентов напрямую с производств Америки, Европы и Азии, а так же с крупнейших складов мира;
- Широкая линейка поставок активных и пассивных импортных электронных компонентов (более 30 млн. наименований);
- Поставка сложных, дефицитных, либо снятых с производства позиций;
- Оперативные сроки поставки под заказ (от 5 рабочих дней);
- Экспресс доставка в любую точку России;
- Помощь Конструкторского Отдела и консультации квалифицированных инженеров;
- Техническая поддержка проекта, помощь в подборе аналогов, поставка прототипов;
- Поставка электронных компонентов под контролем ВП;
- Система менеджмента качества сертифицирована по Международному стандарту ISO 9001;
- При необходимости вся продукция военного и аэрокосмического назначения проходит испытания и сертификацию в лаборатории (по согласованию с заказчиком);
- Поставка специализированных компонентов военного и аэрокосмического уровня качества (Xilinx, Altera, Analog Devices, Intersil, Interpoint, Microsemi, Actel, Aeroflex, Peregrine, VPT, Syfer, Eurofarad, Texas Instruments, MS Kennedy, Miteq, Cobham, E2V, MA-COM, Hittite, Mini-Circuits, General Dynamics и др.);

Компания «Океан Электроники» является официальным дистрибьютором и эксклюзивным представителем в России одного из крупнейших производителей разъемов военного и аэрокосмического назначения **«JONHON»**, а так же официальным дистрибьютором и эксклюзивным представителем в России производителя высокотехнологичных и надежных решений для передачи СВЧ сигналов **«FORSTAR»**.

AVIC JONHON

«JONHON» (основан в 1970 г.)

Разъемы специального, военного и аэрокосмического назначения:

(Применяются в военной, авиационной, аэрокосмической, морской, железнодорожной, горно- и нефтедобывающей отраслях промышленности)

«FORSTAR» (основан в 1998 г.)

ВЧ соединители, коаксиальные кабели, кабельные сборки и микроволновые компоненты:

(Применяются в телекоммуникациях гражданского и специального назначения, в средствах связи, РЛС, а так же военной, авиационной и аэрокосмической отраслях промышленности).

FORSTAR®

Телефон: 8 (812) 309-75-97 (многоканальный)
Факс: 8 (812) 320-03-32
Электронная почта: ocean@oceanchips.ru
Web: http://oceanchips.ru/
Адрес: 198099, г. Санкт-Петербург, ул. Калинина, д. 2, корп. 4, лит. А