Conductive Polymer Aluminum Capacitors SMD (Chip), Low Impedance

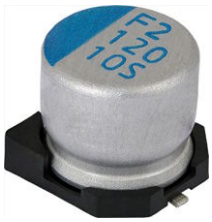

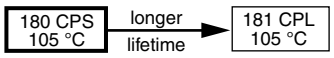

Fig. 1

QUICK REFERENCE DATA	
DESCRIPTION	**VALUE**
Nominal case sizes (L x W x H in mm)	5.3 x 5.3 x 5.7 to 10.4 x 10.4 x 12.6
Rated capacitance range, C_R	22 µF to 2700 µF
Tolerance on C_R	± 20 %
Rated voltage range, U_R	2.5 V to 35 V
Category temperature range	-55 °C to +105 °C
Endurance test at 105 °C	2000 h
Useful life at 105 °C	2500 h
Shelf life at 0 V, 105 °C	1000 h
Based on sectional specification	IEC 60384-18 / CECC 32300
Climatic category IEC 60068	55/105/56

FEATURES

- Useful life: up to 2500 h at 105 °C
- Very low ESR and highest ripple current
- SMD-version with base plate, lead (Pb)-free reflow solderable
- Material categorization: for definitions of compliance please see www.vishay.com/doc?99912

Pb-free

RoHS COMPLIANT

APPLICATIONS

- SMD technology, for high temperature reflow soldering
- Industrial and professional applications
- Telecommunications and IT
- Portable and mobile equipment

MARKING

- Rated capacitance (in µF)
- Rated voltage (in V)
- Date code, in accordance with IEC 60062
- Blue mark or “-” sign indicating the cathode (the anode is identified by bevelled edges)
- Code indicating group number (S)

PACKAGING

Supplied in blister tape on reel

For technical questions, contact: aluminumcaps1@vishay.com

THIS DOCUMENT IS SUBJECT TO CHANGE WITHOUT NOTICE. THE PRODUCTS DESCRIBED HEREIN AND THIS DOCUMENT ARE SUBJECT TO SPECIFIC DISCLAIMERS, SET FORTH AT www.vishay.com/doc?91000

SELECTION CHART FOR C_R, U_R, AND RELEVANT NOMINAL CASE SIZES (L x W x H in mm)

C_R (µF)	U_R (V)							
	2.5	4.0	6.3	10	16	20	25	35
22	→	→	→	→	→	→	→	6.6 x 6.6 x 5.9
39	→	→	→	→	5.3 x 5.3 x 5.7 6.6 x 6.6 x 5.9	-	-	-
56	→	→	→	→	→	→	6.6 x 6.6 x 5.9	-
68	→	→	→	5.3 x 5.3 x 5.7	6.6 x 6.6 x 5.9	-	-	-
82	→	→	→	→	→	→	→	8.4 x 8.4 x 12
100	→	→	→	→	6.6 x 6.6 x 5.9	-	-	-
120	→	→	5.3 x 5.3 x 5.7	6.6 x 6.6 x 5.9	→	6.6 x 6.6 x 5.9	→	10.4 x 10.4 x 12.6
150	→	5.3 x 5.3 x 5.7	→	6.6 x 6.6 x 7.7	8.4 x 8.4 x 6.7	-	-	-
180	5.3 x 5.3 x 5.7	→	→	→	→	→	8.4 x 8.4 x 12	-
220	→	→	6.6 x 6.6 x 5.9	→	10.4 x 10.4 x 7.7	-	-	-
270	→	6.6 x 6.6 x 5.9	→	→	8.4 x 8.4 x 12	-	-	-
330	→	6.6 x 6.6 x 5.9	6.6 x 6.6 x 5.9 6.6 x 6.6 x 7.7	→	10.4 x 10.4 x 12.6	→	10.4 x 10.4 x 12.6	-
390	6.6 x 6.6 x 5.9	6.6 x 6.6 x 7.7	8.4 x 8.4 x 6.7	→	→	8.4 x 8.4 x 12	-	-
470	→	→	→	10.4 x 10.4 x 7.7	10.4 x 10.4 x 12.6	-	-	-
560	6.6 x 6.6 x 5.9 6.6 x 6.6 x 7.7	8.4 x 8.4 x 6.7 8.4 x 8.4 x 12	→	→	→	10.4 x 10.4 x 12.6	-	-
680	8.4 x 8.4 x 6.7	-	-	-	-	-	-	-
820	8.4 x 8.4 x 12	→	8.4 x 8.4 x 12 10.4 x 10.4 x 7.7	→	10.4 x 10.4 x 12.6	-	-	-
1000	→	10.4 x 10.4 x 7.7	-	-	-	-	-	-
1200	10.4 x 10.4 x 7.7	8.4 x 8.4 x 12	-	-	-	-	-	-
1500	8.4 x 8.4 x 12	8.4 x 8.4 x 12	10.4 x 10.4 x 12.6	-	-	-	-	-
2200	→	10.4 x 10.4 x 12.6	-	-	-	-	-	-
2700	10.4 x 10.4 x 12.6	-	-	-	-	-	-	-

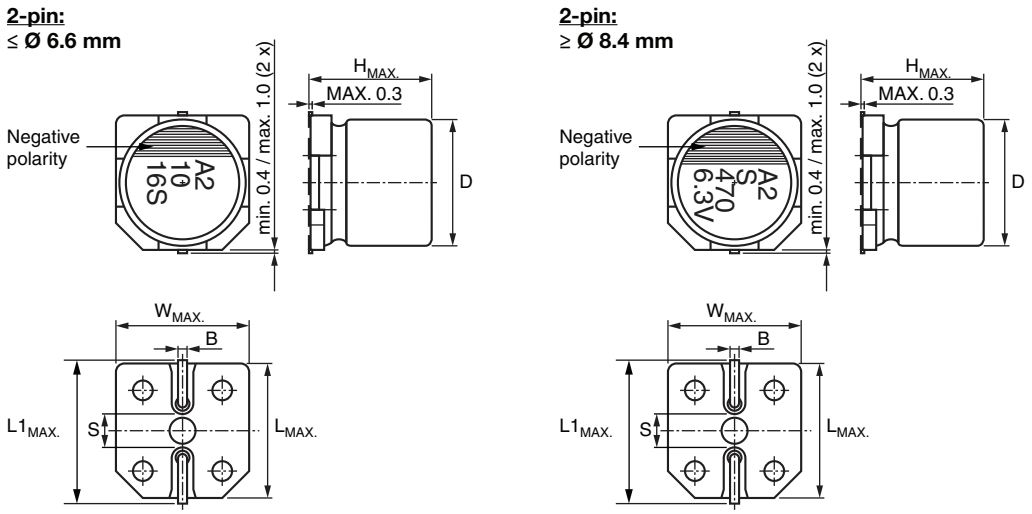

Fig. 2 - Dimensional outline

For technical questions, contact: aluminumcaps1@vishay.com
THIS DOCUMENT IS SUBJECT TO CHANGE WITHOUT NOTICE. THE PRODUCTS DESCRIBED HEREIN AND THIS DOCUMENT ARE SUBJECT TO SPECIFIC DISCLAIMERS, SET FORTH AT www.vishay.com/doc?91000

Table 1

DIMENSIONS in millimeters **AND MASS**									
NOMINAL CASE SIZE L x W x H	CASE CODE	$L_{MAX.}$	$W_{MAX.}$	$H_{MAX.}$	Ø D	$B_{MAX.}$	S	$L1_{MAX.}$	MASS (g)
5.3 x 5.3 x 5.7	0506	5.5	5.5	6.0	5.0	0.8	1.5	6.1	~ 0.15
6.6 x 6.6 x 5.9	0606	6.8	6.8	6.0	6.3	0.8	2.0	7.4	~ 0.25
6.6 x 6.6 x 7.7	0608	6.8	6.8	8.0	6.3	0.8	2.0	7.4	~ 0.4
8.4 x 8.4 x 6.7	0807	8.6	8.6	7.0	8.0	1.1	3.1	9.2	~ 0.5
8.4 x 8.4 x 12	0812	8.6	8.6	12.5	8.0	1.1	3.1	9.2	~ 0.8
10.4 x 10.4 x 7.7	1008	10.6	10.6	8.0	10	1.3	4.7	11.2	~ 0.9
10.4 x 10.4 x 12.6	1013	10.6	10.6	12.7	10	1.3	4.7	11.2	~ 1.3

Table 2

TAPE AND REEL DIMENSIONS in millimeters, **PACKAGING QUANTITIES**						
NOMINAL CASE SIZE L x W x H	CASE CODE	PITCH P_1	TAPE WIDTH W	TAPE THICKNESS T_2	REEL DIAMETER	PACKAGING QUANTITY PER REEL
5.3 x 5.3 x 5.7	0506	12	12	6.2	380	1000
6.6 x 6.6 x 5.9	0606	12	16	6.2	380	1000
6.6 x 6.6 x 7.7	0608	12	16	8.3	380	1000
8.4 x 8.4 x 6.7	0807	12	16	6.8	380	1000
8.4 x 8.4 x 12	0812	16	16	13.0	380	400
10.4 x 10.4 x 7.7	1008	16	24	10.0	380	500
10.4 x 10.4 x 12.6	1013	16	24	14.0	380	400

MOUNTING

The capacitors are designed for automatic placement on to printed-circuit boards.

Optimum dimensions of soldering pads depend amongst others on soldering method, mounting accuracy, print layout and / or adjacent components.

For recommended soldering pad dimensions, refer to Fig. 3 and Table 3.

SOLDERING

Soldering conditions are defined by the curve, temperature versus time, where the temperature is that measured on the component during processing.

For maximum conditions refer to Fig. 4.

Any temperature versus time curve which does not exceed the specified maximum curves may be applied.

As a general principle, temperature and duration shall be the **minimum** necessary required to ensure good soldering connections. However, the specified maximum curves should never be exceeded.

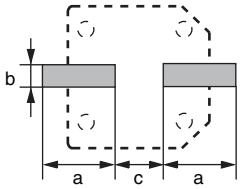

Fig. 3 - Recommended soldering pad dimensions

For technical questions, contact: aluminumcaps1@vishay.com
THIS DOCUMENT IS SUBJECT TO CHANGE WITHOUT NOTICE. THE PRODUCTS DESCRIBED HEREIN AND THIS DOCUMENT ARE SUBJECT TO SPECIFIC DISCLAIMERS, SET FORTH AT www.vishay.com/doc?91000

Table 3

RECOMMENDED SOLDERING PAD DIMENSIONS in millimeters			
CASE CODE	**a**	**b**	**c**
0506	1.4	3.0	1.6
0606	1.9	3.5	1.6
0608	1.9	3.5	1.6
0807	3.0	3.5	2.5
0812	3.0	3.5	2.5
1008	4.0	4.0	2.5
1013	4.0	4.0	2.5

ADVANCED SOLDERING PROFILE FOR LEAD (Pb)-FREE REFLOW PROCESS

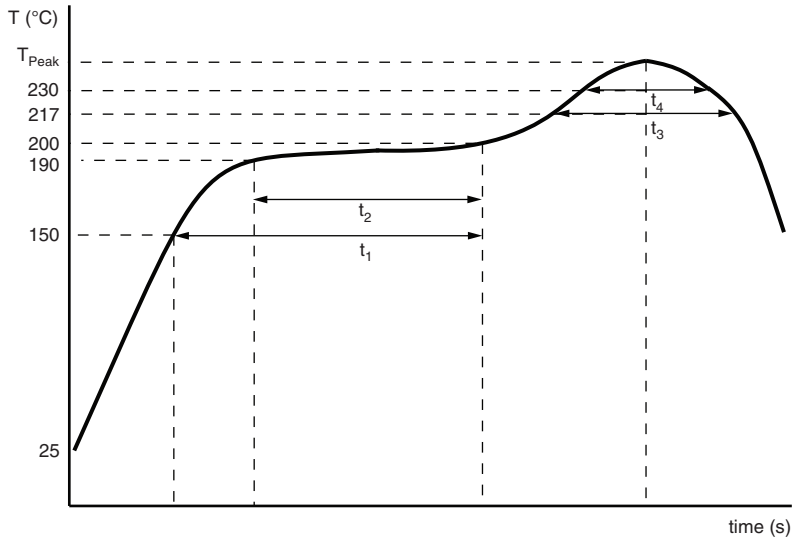

Fig. 4 - Maximum temperature load during reflow soldering

Table 4

REFLOW SOLDERING CONDITIONS for MAL2180xxxxxE3	
PROFILE FEATURES	**CASE CODE 0506 TO 1013**
Max. time from 25 °C to T_{Peak}	300 s
Max. ramp-up rate to 150 °C	3 K/s
Max. time from 150 °C to 200 °C (t_1)	150 s
Max. time from 190 °C to 200 °C (t_2)	110 s
Ramp up rate from 200 °C to T_{Peak}	0.5 K/s to 3 K/s
Max. time above $T_{Liquidus}$ (217 °C) (t_3)	90 s
Max. time above 230 °C (t_4)	70 s
Peak temperature T_{Peak}	260 °C
Max. time above T_{Peak} minus 5 °C	40 s
Ramp-down rate from $T_{Liquidus}$	3 K/s to 6 K/s

Note

- Temperature measuring point on top of the case and on terminals.

For technical questions, contact: aluminumcaps1@vishay.com
THIS DOCUMENT IS SUBJECT TO CHANGE WITHOUT NOTICE. THE PRODUCTS DESCRIBED HEREIN AND THIS DOCUMENT ARE SUBJECT TO SPECIFIC DISCLAIMERS, SET FORTH AT www.vishay.com/doc?91000

ELECTRICAL DATA	
SYMBOL	DESCRIPTION
C_R	Rated capacitance at 100 Hz, tolerance ± 20 %
I_R	Rated RMS ripple current at 100 kHz, 105 °C
I_{L2}	Max. leakage current after 2 min at U_R
tan δ	Max. dissipation factor at 100 Hz
Z	Max. impedance at 100 kHz

Note

- Unless otherwise specified, all electrical values in Table 5 apply at T_{amb} = 20 °C, P = 86 kPa to 106 kPa, RH = 45 % to 75 %

ORDERING EXAMPLE

Conductive polymer 180 CPS series

100 µF / 16 V; ± 20 %

Nominal case size: 6.6 mm x 6.6 mm x 5.9 mm; taped on reel

Ordering code: MAL218097504E3

Table 5

ELECTRICAL DATA AND ORDERING INFORMATION							
U_R (V)	C_R (µF)	NOMINAL CASE SIZE L x W x H (mm)	I_R 105 °C 100 kHz (mA)	I_{L2} 2 min (µA)	tan δ 100 Hz	Z 100 kHz 20 °C (Ω)	ORDERING CODE MAL2180...
2.5	180	5.3 x 5.3 x 5.7	2800	300	0.12	0.019	97251E3
	390	6.6 x 6.6 x 5.9	3160	300	0.12	0.014	97253E3
	560	6.6 x 6.6 x 5.9	3500	300	0.12	0.016	97254E3
	560	6.6 x 6.6 x 7.7	4200	420	0.12	0.009	97255E3
	680	8.4 x 8.4 x 6.7	3370	500	0.12	0.020	97256E3
	820	8.4 x 8.4 x 12	5380	500	0.12	0.009	97257E3
	1200	10.4 x 10.4 x 7.7	4450	600	0.15	0.013	97258E3
	1500	8.4 x 8.4 x 12	5150	750	0.12	0.012	97259E3
	2700	10.4 x 10.4 x 12.6	5600	1350	0.15	0.009	97261E3
4	150	5.3 x 5.3 x 5.7	2730	300	0.12	0.020	97701E3
	270	6.6 x 6.6 x 5.9	3160	300	0.12	0.015	97702E3
	330	6.6 x 6.6 x 5.9	3160	300	0.12	0.015	97703E3
	390	6.6 x 6.6 x 7.7	4200	468	0.12	0.009	97704E3
	560	8.4 x 8.4 x 6.7	3220	500	0.12	0.022	97705E3
	560	8.4 x 8.4 x 12	5380	500	0.15	0.009	97706E3
	1000	10.4 x 10.4 x 7.7	4300	800	0.12	0.014	97707E3
	1200	8.4 x 8.4 x 12	4700	960	0.15	0.012	97708E3
	1500	8.4 x 8.4 x 12	4700	1200	0.15	0.012	97709E3
	2200	10.4 x 10.4 x 12.6	5700	1760	0.15	0.009	97711E3
6.3	120	5.3 x 5.3 x 5.7	2660	300	0.12	0.021	97301E3
	220	6.6 x 6.6 x 5.9	3160	300	0.12	0.015	97303E3
	330	6.6 x 6.6 x 5.9	3390	415	0.12	0.017	97304E3
	330	6.6 x 6.6 x 7.7	4200	623	0.12	0.009	97305E3
	390	8.4 x 8.4 x 6.7	3220	491	0.12	0.022	97306E3
	820	8.4 x 8.4 x 12	4700	1033	0.15	0.013	97307E3
	820	10.4 x 10.4 x 7.7	4300	1033	0.12	0.014	97308E3
	1500	10.4 x 10.4 x 12.6	5560	1890	0.15	0.010	97309E3
10	68	5.3 x 5.3 x 5.7	2540	300	0.12	0.023	97401E3
	120	6.6 x 6.6 x 5.9	2600	300	0.12	0.022	97402E3
	150	6.6 x 6.6 x 7.7	2800	450	0.12	0.015	97403E3
	270	8.4 x 8.4 x 6.7	3220	500	0.12	0.022	97404E3
	470	10.4 x 10.4 x 7.7	3800	940	0.12	0.019	97405E3

For technical questions, contact: aluminumcaps1@vishay.com
THIS DOCUMENT IS SUBJECT TO CHANGE WITHOUT NOTICE. THE PRODUCTS DESCRIBED HEREIN AND THIS DOCUMENT ARE SUBJECT TO SPECIFIC DISCLAIMERS, SET FORTH AT www.vishay.com/doc?91000

ELECTRICAL DATA AND ORDERING INFORMATION							
U_R (V)	C_R (µF)	NOMINAL CASE SIZE L x W x H (mm)	I_R 105 °C 100 kHz (mA)	I_{L2} 2 min (µA)	tan δ 100 Hz	Z 100 kHz 20 °C (Ω)	ORDERING CODE MAL2180...
16	39	5.3 x 5.3 x 5.7	2350	300	0.12	0.020	97501E3
	39	6.6 x 6.6 x 5.9	2460	300	0.12	0.024	97502E3
	68	6.6 x 6.6 x 5.9	2440	300	0.12	0.025	97503E3
	100	6.6 x 6.6 x 5.9	2490	320	0.12	0.024	97504E3
	150	8.4 x 8.4 x 6.7	3220	500	0.12	0.022	97505E3
	220	10.4 x 10.4 x 7.7	3450	704	0.12	0.022	97506E3
	270	8.4 x 8.4 x 12	4850	864	0.15	0.012	97507E3
	330	10.4 x 10.4 x 12.6	5300	1056	0.15	0.012	97508E3
	470	10.4 x 10.4 x 12.6	6100	1504	0.15	0.010	97509E3
	820	10.4 x 10.4 x 12.6	5400	2624	0.12	0.012	97511E3
20	120	6.6 x 6.6 x 5.9	3200	480	0.12	0.025	97201E3
	390	8.4 x 8.4 x 12	4950	1560	0.12	0.014	97202E3
	560	10.4 x 10.4 x 12.6	5600	2240	0.12	0.012	97203E3
25	56	6.6 x 6.6 x 5.9	2800	280	0.12	0.030	97601E3
	180	8.4 x 8.4 x 12	4650	900	0.12	0.016	97602E3
	330	10.4 x 10.4 x 12.6	5000	1650	0.12	0.014	97603E3
35	22	6.6 x 6.6 x 5.9	2600	154	0.12	0.035	97001E3
	82	8.4 x 8.4 x 12	4000	574	0.12	0.020	97002E3
	120	10.4 x 10.4 x 12.6	4400	840	0.12	0.018	97003E3

Table 6

ADDITIONAL ELECTRICAL DATA		
PARAMETER	**CONDITIONS**	**VALUE**
Voltage		
Surge voltage for short periods	IEC 60384-18, subclause 4.14	$U_s \leq 1.15 \times U_R$
Reverse voltage for short periods	IEC 60384-18, subclause 4.16; $T_A \leq 105$ °C	$U_{rev} \leq 1$ V

USEFUL LIFE AND ENDURANCE

Table 7

ENDURANCE TEST AND USEFUL LIFE						
SERIES	CASE CODE	USEFUL LIFE AT 105 °C (h)	ENDURANCE AT 105 °C (h)	ENDURANCE AT 95 °C (h)	ENDURANCE AT 85 °C (h)	ENDURANCE AT 75 °C (h)
180 CPS	0506 - 1013	2500	2000	6000	20 000	63 000

Endurance can be calculated by formula below:

$$L_r = L_0 \times 10^{\frac{T_0 - T_r}{20}}$$

L_r: estimated lifetime (h)

L_0: base lifetime specified at maximum operating temperature with applied the DC voltage (h)

T_0: rated maximum operating temperature (°C)

T_r: actual ambient temperature (°C)

For technical questions, contact: aluminumcaps1@vishay.com
THIS DOCUMENT IS SUBJECT TO CHANGE WITHOUT NOTICE. THE PRODUCTS DESCRIBED HEREIN AND THIS DOCUMENT ARE SUBJECT TO SPECIFIC DISCLAIMERS, SET FORTH AT www.vishay.com/doc?91000

Table 8

TEST PROCEDURES AND REQUIREMENTS			
TEST		PROCEDURE (quick reference)	REQUIREMENTS
NAME OF TEST	REFERENCE		
Mounting	IEC 60384-18, subclause 4.3	Shall be performed prior to tests mentioned below; reflow soldering; for maximum temperature load refer to chapter “Mounting”	$\Delta C/C$: ± 5 % tan $\delta \leq$ spec. limit $I_{L2} \leq$ spec. limit
Endurance	IEC 60384-18 / CECC 32300, subclause 4.15	T_{amb} = 105 °C; U_R applied; for test duration see Table 7	$\Delta C/C$: ± 20 % tan $\delta \leq$ 2 x spec. limit $I_{L2} \leq$ spec. limit
Useful life	CECC 30301, subclause 1.8.1	T_{amb} = 105 °C; U_R and I_R applied; for test duration see Table 7	$\Delta C/C$: ± 30 % tan $\delta \leq$ 3 x spec. limit $I_{L2} \leq$ spec. limit
Shelf life (storage at high temperature)	IEC 60384-18 / CECC 32300, subclause 4.17	T_{amb} = 105 °C; no voltage applied; 1000 h after test: U_R to be applied for 30 min, 24 h to 48 h before measurement	For requirements see “Endurance test” above

For technical questions, contact: aluminumcaps1@vishay.com
THIS DOCUMENT IS SUBJECT TO CHANGE WITHOUT NOTICE. THE PRODUCTS DESCRIBED HEREIN AND THIS DOCUMENT ARE SUBJECT TO SPECIFIC DISCLAIMERS, SET FORTH AT www.vishay.com/doc?91000

Disclaimer

ALL PRODUCT, PRODUCT SPECIFICATIONS AND DATA ARE SUBJECT TO CHANGE WITHOUT NOTICE TO IMPROVE RELIABILITY, FUNCTION OR DESIGN OR OTHERWISE.

Vishay Intertechnology, Inc., its affiliates, agents, and employees, and all persons acting on its or their behalf (collectively, "Vishay"), disclaim any and all liability for any errors, inaccuracies or incompleteness contained in any datasheet or in any other disclosure relating to any product.

Vishay makes no warranty, representation or guarantee regarding the suitability of the products for any particular purpose or the continuing production of any product. To the maximum extent permitted by applicable law, Vishay disclaims (i) any and all liability arising out of the application or use of any product, (ii) any and all liability, including without limitation special, consequential or incidental damages, and (iii) any and all implied warranties, including warranties of fitness for particular purpose, non-infringement and merchantability.

Statements regarding the suitability of products for certain types of applications are based on Vishay's knowledge of typical requirements that are often placed on Vishay products in generic applications. Such statements are not binding statements about the suitability of products for a particular application. It is the customer's responsibility to validate that a particular product with the properties described in the product specification is suitable for use in a particular application. Parameters provided in datasheets and/or specifications may vary in different applications and performance may vary over time. All operating parameters, including typical parameters, must be validated for each customer application by the customer's technical experts. Product specifications do not expand or otherwise modify Vishay's terms and conditions of purchase, including but not limited to the warranty expressed therein.

Except as expressly indicated in writing, Vishay products are not designed for use in medical, life-saving, or life-sustaining applications or for any other application in which the failure of the Vishay product could result in personal injury or death. Customers using or selling Vishay products not expressly indicated for use in such applications do so at their own risk. Please contact authorized Vishay personnel to obtain written terms and conditions regarding products designed for such applications.

No license, express or implied, by estoppel or otherwise, to any intellectual property rights is granted by this document or by any conduct of Vishay. Product names and markings noted herein may be trademarks of their respective owners.

Material Category Policy

Vishay Intertechnology, Inc. hereby certifies that all its products that are identified as RoHS-Compliant fulfill the definitions and restrictions defined under Directive 2011/65/EU of The European Parliament and of the Council of June 8, 2011 on the restriction of the use of certain hazardous substances in electrical and electronic equipment (EEE) - recast, unless otherwise specified as non-compliant.

Please note that some Vishay documentation may still make reference to RoHS Directive 2002/95/EC. We confirm that all the products identified as being compliant to Directive 2002/95/EC conform to Directive 2011/65/EU.

Vishay Intertechnology, Inc. hereby certifies that all its products that are identified as Halogen-Free follow Halogen-Free requirements as per JEDEC JS709A standards. Please note that some Vishay documentation may still make reference to the IEC 61249-2-21 definition. We confirm that all the products identified as being compliant to IEC 61249-2-21 conform to JEDEC JS709A standards.

OCEAN CHIPS
Океан Электроники
Поставка электронных компонентов

Компания «Океан Электроники» предлагает заключение долгосрочных отношений при поставках импортных электронных компонентов на взаимовыгодных условиях!

Наши преимущества:

- Поставка оригинальных импортных электронных компонентов напрямую с производств Америки, Европы и Азии, а так же с крупнейших складов мира;
- Широкая линейка поставок активных и пассивных импортных электронных компонентов (более 30 млн. наименований);
- Поставка сложных, дефицитных, либо снятых с производства позиций;
- Оперативные сроки поставки под заказ (от 5 рабочих дней);
- Экспресс доставка в любую точку России;
- Помощь Конструкторского Отдела и консультации квалифицированных инженеров;
- Техническая поддержка проекта, помощь в подборе аналогов, поставка прототипов;
- Поставка электронных компонентов под контролем ВП;
- Система менеджмента качества сертифицирована по Международному стандарту ISO 9001;
- При необходимости вся продукция военного и аэрокосмического назначения проходит испытания и сертификацию в лаборатории (по согласованию с заказчиком);
- Поставка специализированных компонентов военного и аэрокосмического уровня качества (Xilinx, Altera, Analog Devices, Intersil, Interpoint, Microsemi, Actel, Aeroflex, Peregrine, VPT, Syfer, Eurofarad, Texas Instruments, MS Kennedy, Miteq, Cobham, E2V, MA-COM, Hittite, Mini-Circuits, General Dynamics и др.);

Компания «Океан Электроники» является официальным дистрибьютором и эксклюзивным представителем в России одного из крупнейших производителей разъемов военного и аэрокосмического назначения **«JONHON»**, а так же официальным дистрибьютором и эксклюзивным представителем в России производителя высокотехнологичных и надежных решений для передачи СВЧ сигналов **«FORSTAR»**.

AVIC JONHON

«JONHON» (основан в 1970 г.)

Разъемы специального, военного и аэрокосмического назначения:

(Применяются в военной, авиационной, аэрокосмической, морской, железнодорожной, горно- и нефтедобывающей отраслях промышленности)

«FORSTAR» (основан в 1998 г.)

ВЧ соединители, коаксиальные кабели, кабельные сборки и микроволновые компоненты:

(Применяются в телекоммуникациях гражданского и специального назначения, в средствах связи, РЛС, а так же военной, авиационной и аэрокосмической отраслях промышленности).

FORSTAR®

Телефон: 8 (812) 309-75-97 (многоканальный)
Факс: 8 (812) 320-03-32
Электронная почта: ocean@oceanchips.ru
Web: http://oceanchips.ru/
Адрес: 198099, г. Санкт-Петербург, ул. Калинина, д. 2, корп. 4, лит. А