Amphenol Information, Communications, and Commercial

Amphenol

Modular Jacks

PRODUCT CATALOGUE

The Company

Amphenol Commercial Products Group of Amphenol Canada Corp., a subsidiary of Amphenol Corporation, is an ISO 9001 certified facility located in Toronto, Canada. Our activities are dedicated to the design, development, and manufacturing of interconnect products intended for use in the data communications and telecommunications markets. Our expertise in understanding and supporting our customers' interconnect needs has earned Amphenol Canada a reputation of quality and excellence among the world's leading users of electronic components.

About the Catalogue

This modular jack catalogue represents some of our more popular products within this product category. Other product categories include, but are not limited to: D-Sub, Micro-Ribbon, USB, Headers and Sockets, CoolPower connectors, VHDCI, Capacitively Decoupled BNC, filtered connectors (D-Subs and micro-ribbon), and rugged connectors (RJ, USB, D-Subs, and bulkhead adapters).

All of our modular jacks are RoHS compliant.
All drawings in this document are measured in inches [mm], unless otherwise indicated.

Notice: Specifications are subject to change without notice. Contact your nearest Amphenol sales office for the latest specifications. All statements, information, and data given herein are believed to be accurate and reliable, but are presented without guarantee, warranty, or responsibility of any kind, expressed, or implied. Statements or suggestions concerning possible use of our products are made without representation or warranty that any such use is free of patent infringement, and are not recommended to infringe any patent. The user should not assume that all safety measures are indicated or that other measures may not be required. Amphenol and RJ vista are registered trademarks.

CONTENTS

Right Angle (Side Entry)

THROUGH-HOLE

RJHSE	Tab Up, Multiport	5-8
RJESE	Tab Up, Standard Profile	9-11
RJE29	Tab Up, Slim Profile	12-13
RJE37	Tab Up, Single Port, Low Profile	14-15
RJE39	Tab Up, Narrow, 2 and 8 Port	16-17
RJE01	Tab Up, RJ11 (Six Position)	18-19
RJSBE	Tab Down, 1, 2 and 4 Port	20-22
FRJAE	Tab Down, Filtered and Shielded	23-25
RJE02	Tab Down, Single Port, High Profile	26-27
RJE03	Tab Down, Single Port, Low Profile	28-29
RJE05	Tab Down, Ultra Low Profile	30-31
RJE09	Tab Down, Standard Profile	32-34
RJULE	Tab Down, Recessed, Low Profile	35-36
RJE73	Tab Down, Single Port, Low Profile	37-38

SURFACE MOUNT

RJSSE	Tab Up, with Light Pipes	39-40
RJCSE	Tab Up, Standard Profile	42-43
RJLSE	Tab Down, Ultra Low Profile	45-46
RJE07	Tab Down, Single Port	46-47
RJE15	Tab Down, Single Port, Low Profile	48-49

PRESS FIT

RJE56	Tab Down, RJ45	50-51

STACKED

RJE36	Stacked, RJ45 Over USB	66-67
RJSAE	Stacked, 2, 4 and 8 Ports	68-69
RJSNE	Stacked, 4 over 4 Ports	70-71

Additional Products

RJE17	RJ45 Coupler	99-100
Coming Soon & Other		100-103

Vertical (Top Entry)

THROUGH-HOLE

RJHSE	Multiport, Standard Profile	5-8
RJE06	Single Port, Slim Profile	52-53
RJE08	Single/Dual Port, Standard Profile	54-55
RJE74	Single Port, Standard Profile	56-57
RJE88	Single Port, Low Profile	58-59
RJE1J	Single Port, Narrow Profile	60-61
RJE4N	Vertical, 2x4 Port	62-63

SURFACE MOUNT

RJE23	Single Port, Surface Mount	64-65

Category 5e (1G, 2.5G)

RJE48	Right Angle, Low Profile	72-73
RJE58	Right Angle, Standard Profile	74-76
RJE72	Right Angle, Recessed, Low Profile	77-78
RJSGE	Stacked, Press Fit, 2 over 2 Ports	79-80
RJE1R	Stacked, 1 over 1 Ports	90-91

Category 6 (5G, 10G)

RJE45	Vertical, Single Port, Low Profile	81-82
RJE49	Right Angle, Low Profile	83-84
RJE59	Right Angle, Standard Profile	85-87
RJE71	Right Angle, Recessed, Low Profile	88-89
RJE1R	Stacked, 1 over 1 Ports	90-91

Category 6A (10G)

RJE4A	Vertical, Single Port, Low Profile	92-93
RJE7B	Right Angle, Recessed, Low Profile	94-95
RJE60	Right Angle, Standard Profile	96-97

LED OPTIONS 3

Note: Denotes LEDs are available for connectors in the series

LED OPTIONS

LED Designation

LED Code	LED 2 Left		LED 1 Right	
0	Blocked		Blocked	
1	Yellow		Green	
2	Blocked		Green	
3	Yellow		Blocked	
4	Green		Yellow	
5	Green		Green	
6	Yellow		Yellow	
7	Red		Green	
8	Green		Red	
9	Green		Blocked	
A	Green	Yellow	Green	Yellow
B	Red	Green	Red	Green
C	Red	Green	Green	Yellow
D	Green		Green	Yellow
E	Yellow		Green	Yellow
F	Green	Yellow	Yellow	
G	Green	Orange	Green	Orange
H	Green	Yellow	Green	
J	Red	Green	Yellow	
K	Yellow		Green	Orange
L	Green	Yellow	Red	
M	Red		Yellow	
N	Green	Red	Green	Yellow
P	Green		Red	Green
R	Green	Orange	Green	
T	Red		Red	
V	Red	Green	Green	

Ex. RJHSE - 538X*

***LED Designation Code**

Note: A black X in the part number refers to the LED designation code for all drawings in this catalogue.

Tab Up Connectors:

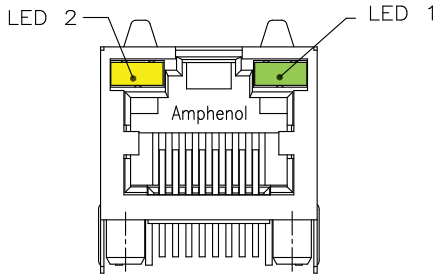

Tab Down Connectors:

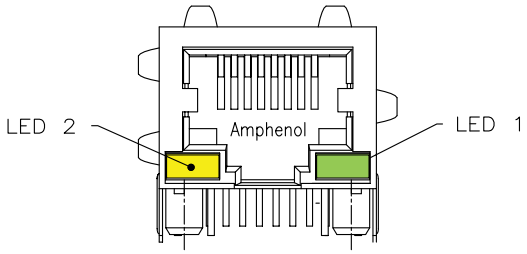

Stacked Connectors:

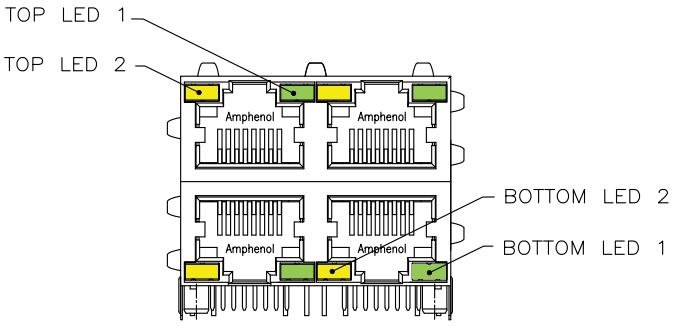

Other LED options are available. If you do not see what you're looking for, please email sales@amphenolcanada.com to request the complete the LED ordering options.

Click to Return to Table of Contents

WAVE SOLDER PROFILE

Typical Wave Solder Profile for Leaded and Lead-Free Through-Hole Package

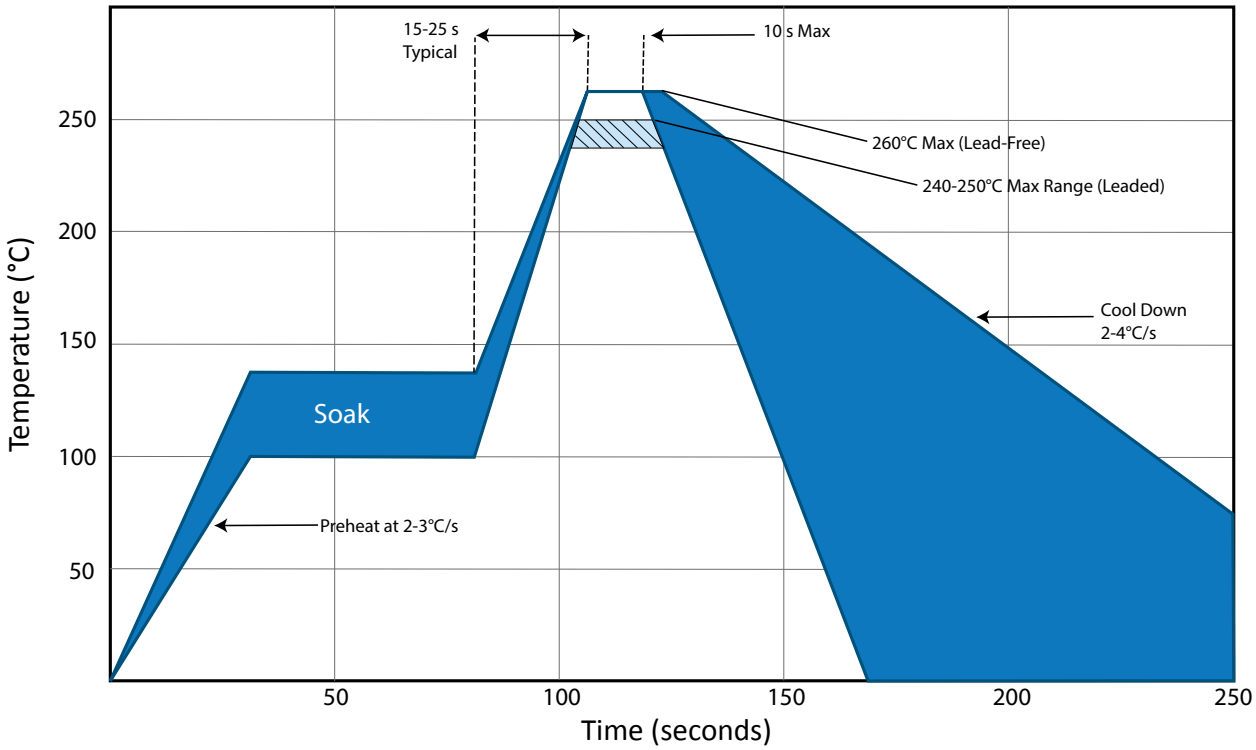

Click to Return to Table of Contents

RJHSE

TAB UP, MULTIPORT, WITH LEDs

TAB UP, MULTIPORT, WITH LEDs

A series of EMI Quiet Modular Jack connectors with built-in LEDs. This product is ideal for LAN applications such as adapter cards and routers. Shielded and non-shielded versions are available, with a variety of LED colors and ports.

SPECIFICATIONS

Material

Insulator:	High temp. thermoplastic; Complies with UL 94V-0; Black
Contacts:	Phosphor bronze hard temper with gold thickness options (6µ", 15µ", 30µ", 50µ") over 50µ" min. nickel on contact mating area; 100µ" min. matte tin plating on soldering tail
Shield:	Stainless steel with tin dipped tails
LED:	Tin plating on LED tails

Mechanical

Insertion Force:	5 lbs max.
Pull Retention Force:	20 lbs min.
Durability:	750 mating & unmating cycles
Recommended Soldering Temperature:	Wave soldering peaked at 260°C for 5 secs max.
Operating Temperature:	-55°C to + 85°C
UL File #:	E135615
CSA File #:	LR685398

Note: Connectors without LEDs are suitable for IR Reflow

Electrical

Contact Resistance:	20 mΩ max.
Insulation resistance:	500 MΩ min. at 500V DC for 2 mins max.
Current Rating:	1.5 Amps per contact
Voltage Rating:	125 Volts AC
DWV:	1000 VAC, 60 Hz. 1 min.
Standard LEDs:	For 5.0 V Systems
Forward Voltage:	2.1 Volts typical
Reverse Voltage:	6 Volts min.
Luminous Intensity:	0.5 mcd min. at 2mA
Low Current LEDs:	For 3.3 V Systems
Forward Voltage:	2 Volts typical
Reverse Voltage:	6 Volts min.
Luminous Intensity:	1 mcd min. at 2mA

Note: Vertical version is only available in single port

ORDERING INFORMATION

RJHSE - X X X X - XX

Version

3 - Vertical mount, 8 positions, 30µ" gold plating
5 - Right angle, 8 positions, 50µ" gold plating
7 - Right angle, 6 positions, 50µ" gold plating
L - Right angle, low profile, 8 positions, 50µ" gold plating
N - Vertical mount, 8 positions, 50µ" gold plating

Shield Options

0 - No shield
3 - Shield with top and side tabs (single port has top tabs only)
4 - For single port only: Shield with top and side tabs
F - Shield without top, side or bottom tabs
P - Shield with top & bottom tabs, for vertical mount connector

Number of Ports

Blank - 1 Port
02 - 2 Ports
03 - 3 Ports
04 - 4 Ports
06 - 6 Ports
08 - 8 Ports

LED Options

Click to view page 3 for options

Number of Contacts

4 - 4 Contacts
6 - 6 Contacts
8 - 8 Contacts

Didn't find what you were looking for?
Please contact sales@amphenolcanada.com and let us know what you need.

Click to Return to Table of Contents

Amphenol Commercial Products - Amphenol Canada Corp. | Telephone: (416) 291-4401 | Fax: (416) 754-8668 | Email: sales@amphenolcanada.com
All specifications are subject to change without notice. Catalogue is updated regularly. Please refer to www.amphenolcanada.com for the most recent edition.

RJHSE

TAB UP, MULTIPORT, WITH LEDs

Single Port

RJHSE-508X

Non-Shielded

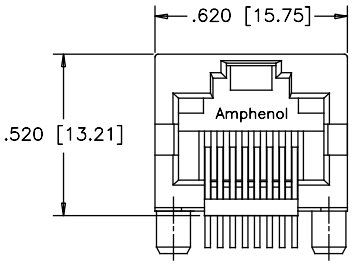

FRONT VIEW

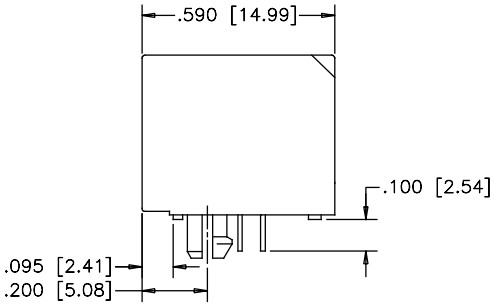

SIDE VIEW

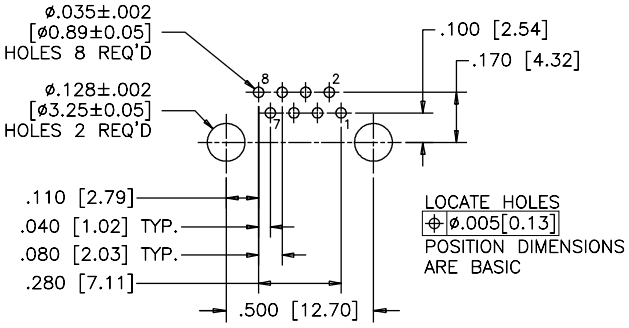

RECOMMENDED PCB LAYOUT

Shielded - With Top & Side Ground Tabs

RJHSE-548X

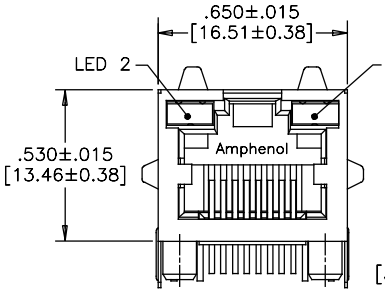

FRONT VIEW

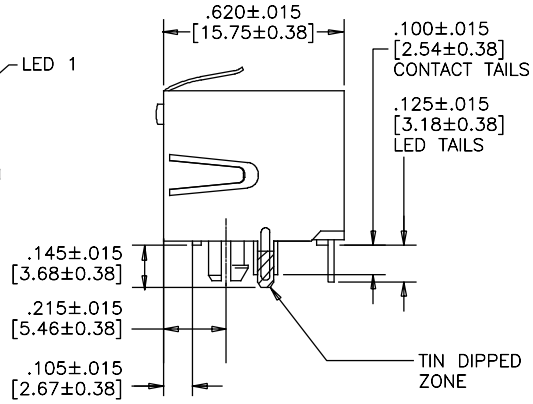

SIDE VIEW

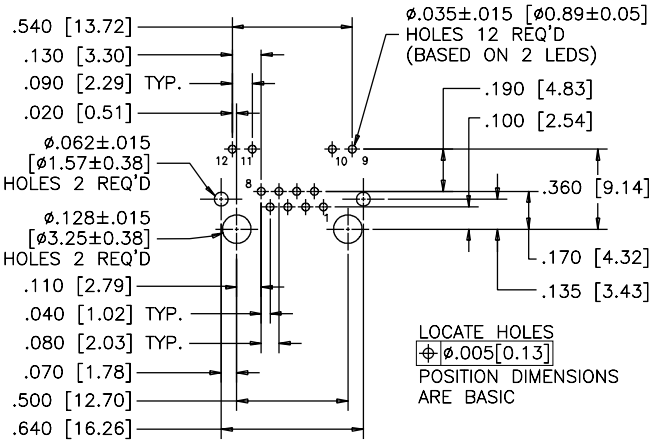

RECOMMENDED PCB LAYOUT

Vertical Mount

RJHSE-338X

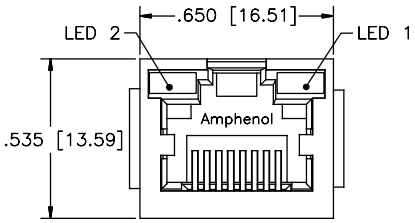

FRONT VIEW

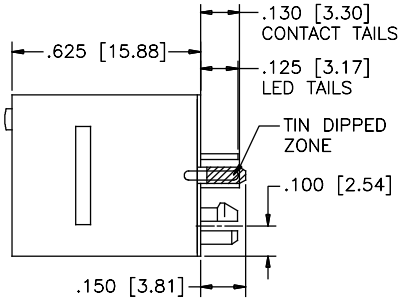

SIDE VIEW

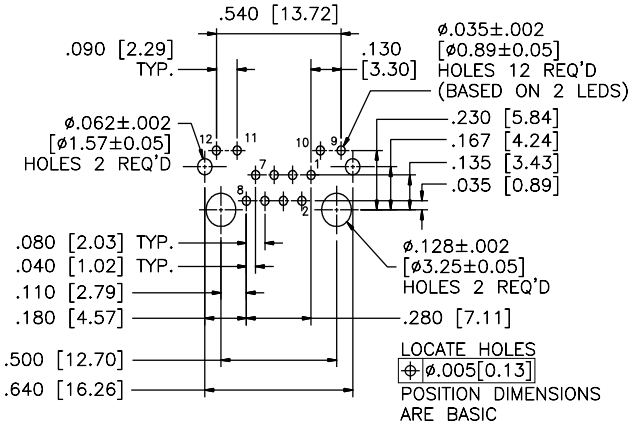

RECOMMENDED PCB LAYOUT

RJHSE

TAB UP, MULTIPORT, WITH LEDs

Single Port

RJHSE-L38X

Shielded - Low Profile

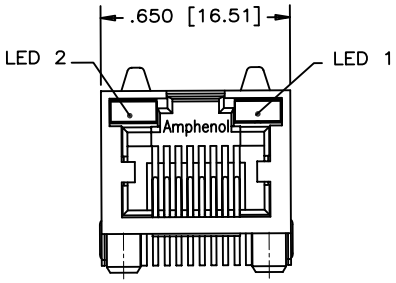

FRONT VIEW

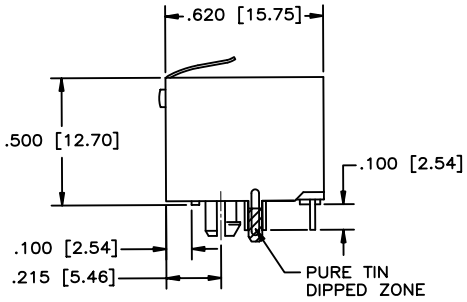

SIDE VIEW

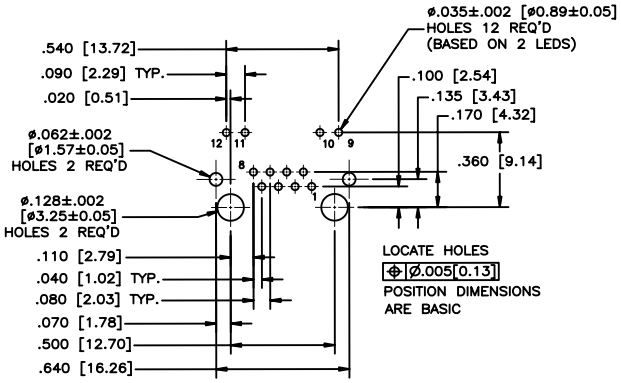

RECOMMENDED PCB LAYOUT

Multi Port

RJHSE-508X-04

Non-Shielded

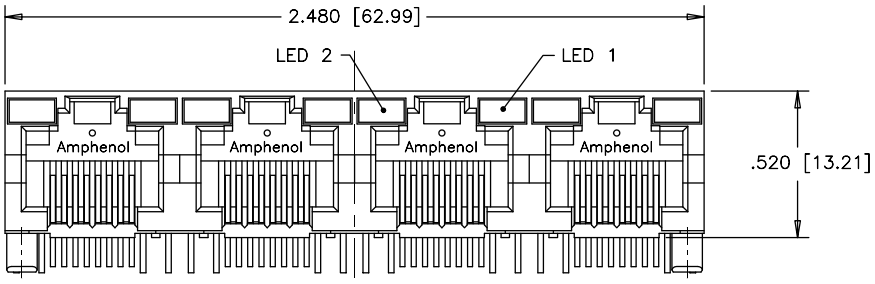

FRONT VIEW

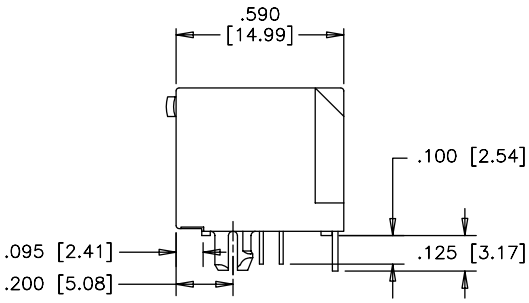

SIDE VIEW

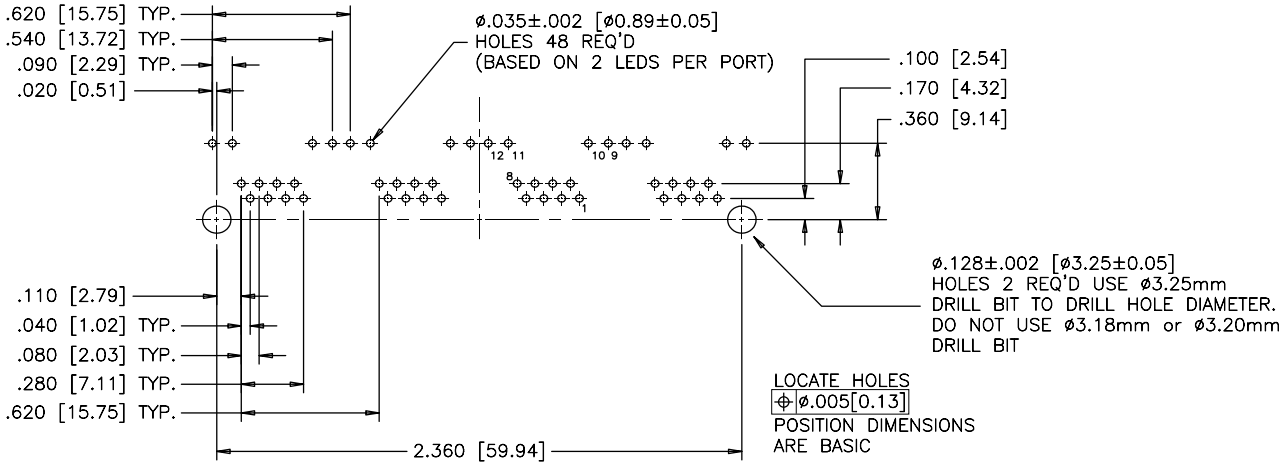

RECOMMENDED PCB LAYOUT

Amphenol Commercial Products - Amphenol Canada Corp. | Telephone: (416) 291-4401 | Fax: (416) 754-8668 | Email: sales@amphenolcanada.com
All specifications are subject to change without notice. Catalogue is updated regularly. Please refer to www.amphenolcanada.com for the most recent edition.

Multi Port

Shielded

RJHSE-538X-04

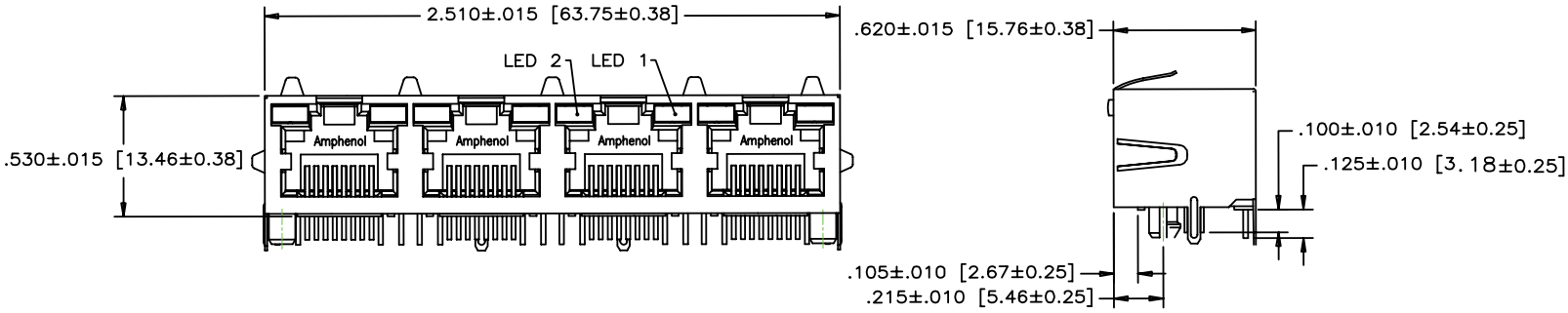

FRONT VIEW

SIDE VIEW

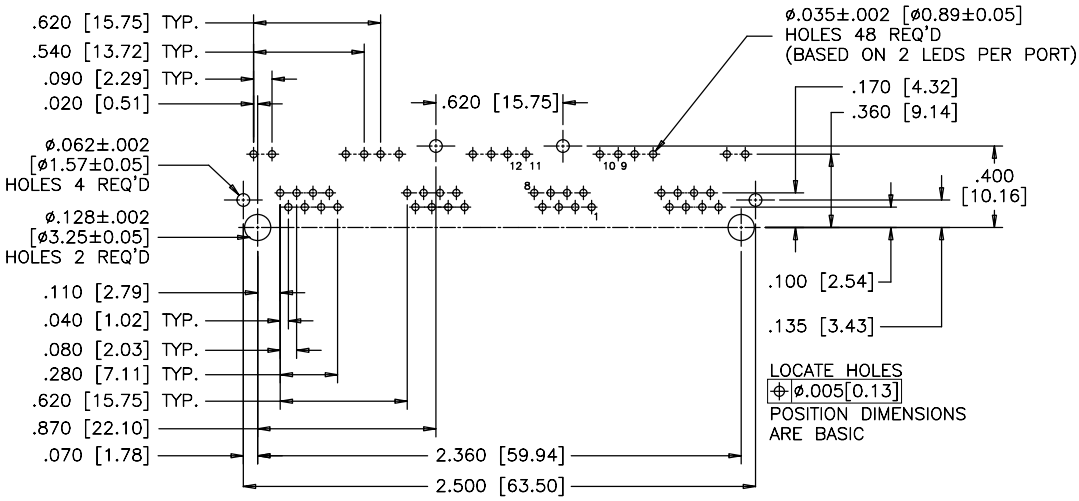

RECOMMENDED PCB LAYOUT

Notes

RJESE

TAB UP, RJ45 & RJ11, STANDARD PROFILE

TAB UP, RJ45 & RJ11, STANDARD PROFILE

This family of EMI quiet modular jack connectors with integrated LEDs features the same data transfer capabilities as our existing series of LED-integrated modular jacks. This product is an economical solution ideal for LAN applications and is intended for use with low temperature soldering processes. Shielded and non-shielded versions are available with a variety of LED options. Also offered in both single and multi port configurations.

SPECIFICATIONS

Material

Insulator:	Engineering thermoplastic; Complies with UL 94V-0; Black
Contacts:	Phosphor bronze hard temper with gold thickness options (6µ", 15µ", 30µ", 50µ") over 50µ" min. nickel on contact mating area; 100µ" min. matte tin plating on soldering tail
Shield:	Stainless steel with tin dipped tails
LED:	Tin plating on LED tails

Mechanical

Insertion Force:	5 lbs max.
Pull Retention Force:	20 lbs min.
Durability:	750 mating & unmating cycles
Recommended Soldering Temperature:	Wave soldering peaked at 260°C for 5 secs max.
Operating Temperature:	-55°C to + 85°C
UL File:	E135615

Electrical

Contact Resistance:	20 mΩ max.
Insulation resistance:	500 MΩ min. at 500V DC for 2 mins max.
Current Rating:	1.5 Amps per contact
Voltage Rating:	125 Volts AC
DWV:	1000 VAC, 60 Hz. 1 min.
LED Forward DC Current:	20mA typical
LED Forward Voltage:	1.9 Volts max. at 2mA (for single colours) 2.6 Volts max. at 2mA (for bicolours)
LED Reverse Voltage:	5 Volts min.
LED Light Intensity:	0.4 to 1.5 mcd min. at 2mA (for single colours) 0.5 mcd min. at 2mA (for bicolours)
LED Wave Length:	Yellow: 587 ± 7 nm measured at 20mA Green: 565 ± 6 nm measured at 20mA Red: 625 ± 5 nm measured at 20mA

ORDERING INFORMATION

RJESE - X X X X - X X XX

Version
- 3 - Vertical mount, 8 positions, with panel stops
- 7 - Right angle, 6 positions
- 8 - Right angle, 8 positions

Shield Options
- 0 - No shield
- 3 - Standard shield, 1 to 8 port (single port without side tabs)
- 4 - Single port shield, top and side tabs

Number of Contacts
- 4 - 4 Contacts
- 6 - 6 Contacts
- 8 - 8 Contacts

LED Options
- Click to view page 3 for options

Special Identifier
- Blank - Standard black housing
- 02 - Yellow housing colour
- 03 - Red housing colour

Number of Ports
- 1 -1 Port
- 2 - 2 Ports
- 4 - 4 Ports

Contact Plating
- 0 - 6µ" gold plating
- 1 - 15µ" gold plating
- 2 - 30µ" gold plating
- 3 - 50µ" gold plating
- F - 1~3µ" gold plating

Click to Return to Table of Contents

Amphenol Commercial Products - Amphenol Canada Corp. | Telephone: (416) 291-4401 | Fax: (416) 754-8668 | Email: sales@amphenolcanada.com
All specifications are subject to change without notice. Catalogue is updated regularly. Please refer to www.amphenolcanada.com for the most recent edition.

RJESE

TAB UP, RJ45 & RJ11, STANDARD PROFILE

Single Port

Non-Shielded

RJESE-808X-X1

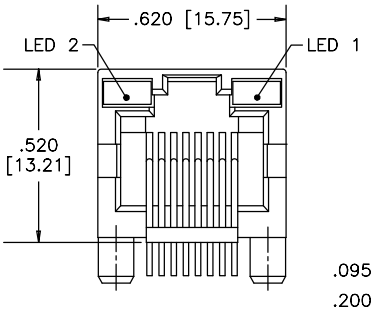

FRONT VIEW

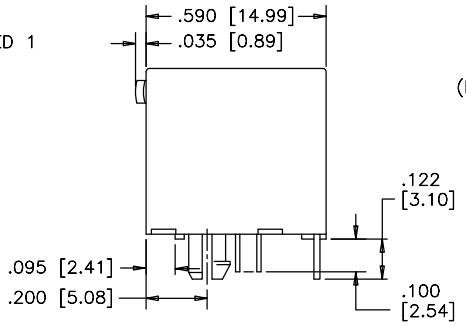

SIDE VIEW

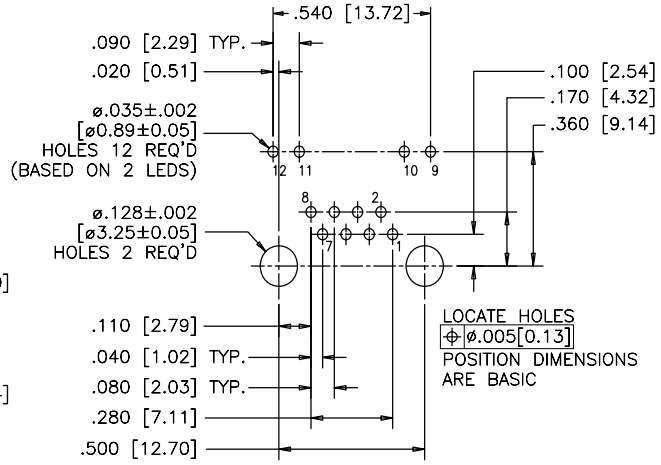

RECOMMENDED PCB LAYOUT

Shielded

RJESE-848X-X1

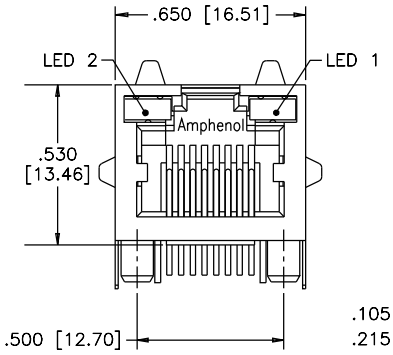

FRONT VIEW

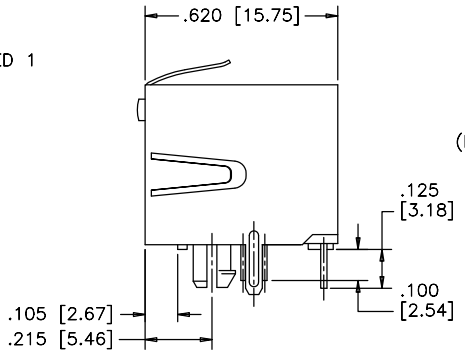

SIDE VIEW

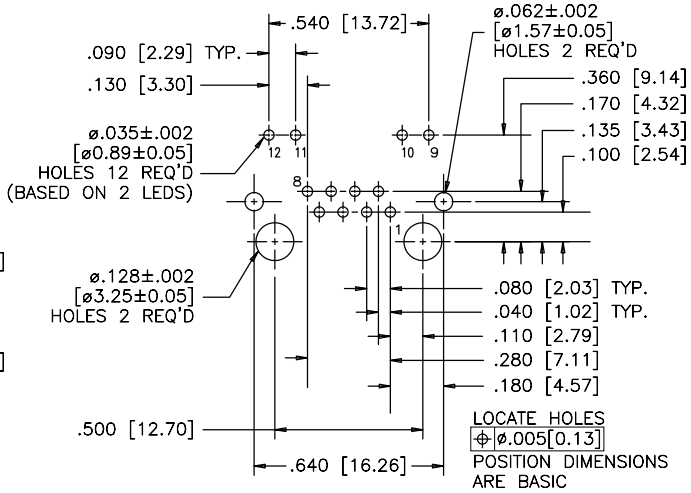

RECOMMENDED PCB LAYOUT

Didn't find what you were looking for?
Please contact sales@amphenolcanada.com and let us know what you need.

RJESE

TAB UP, RJ45 & RJ11, STANDARD PROFILE

Multi Port

RJESE-808X-X4

Non-Shielded

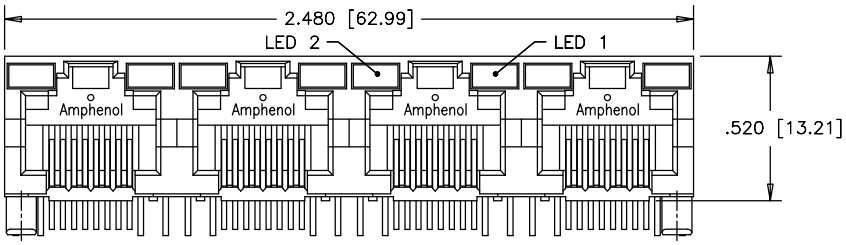

FRONT VIEW

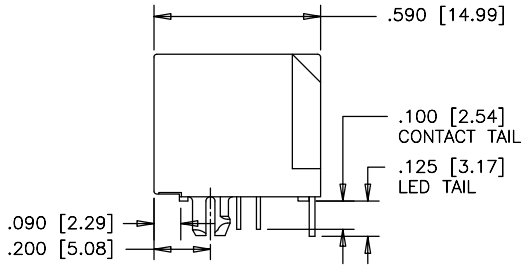

SIDE VIEW

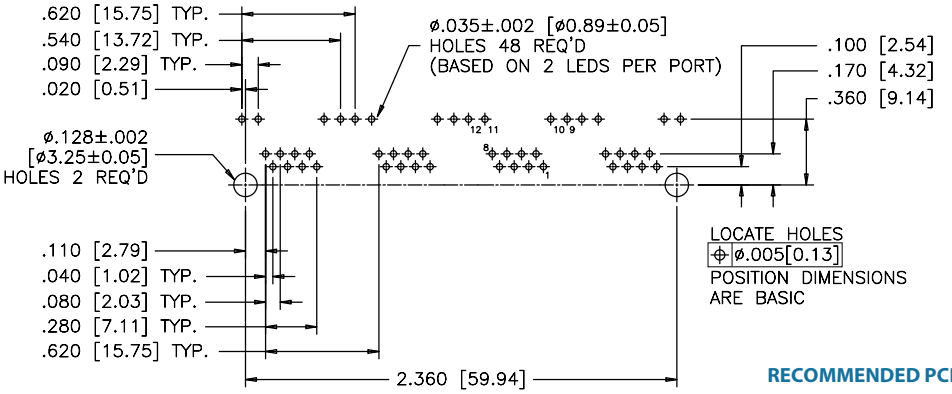

RECOMMENDED PCB LAYOUT

Shielded

RJESE-838X-X4

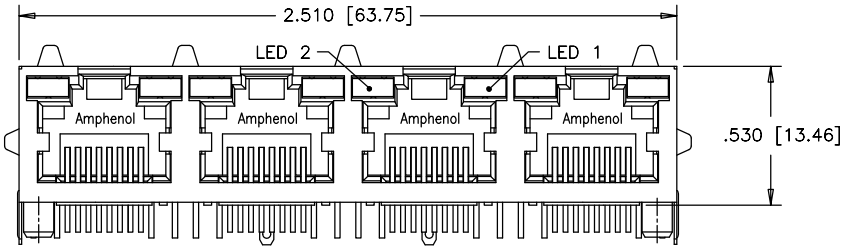

FRONT VIEW

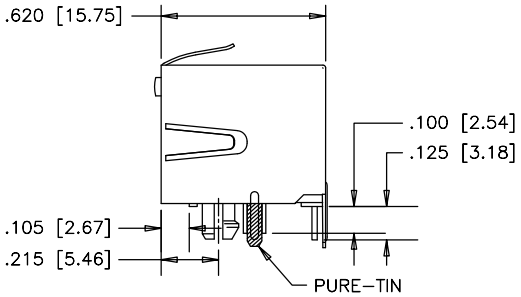

SIDE VIEW

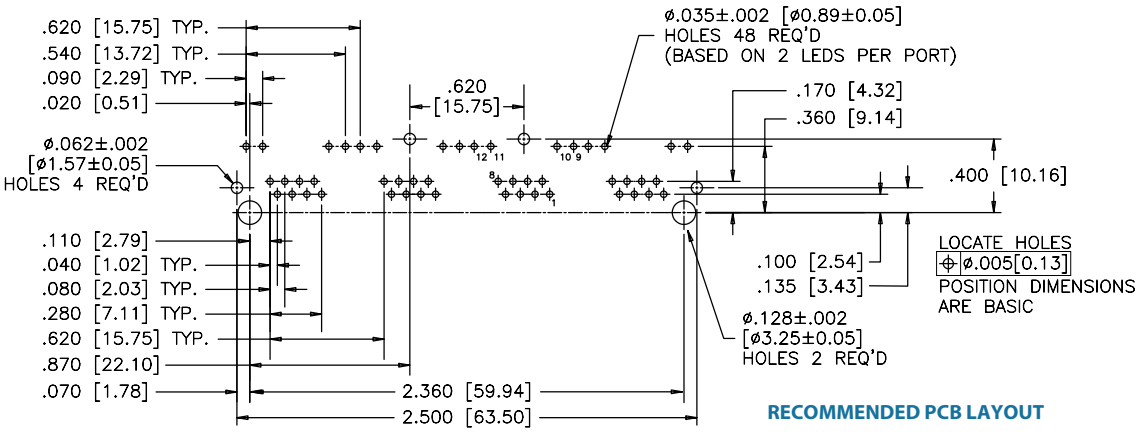

RECOMMENDED PCB LAYOUT

Amphenol Commercial Products - Amphenol Canada Corp. | Telephone: (416) 291-4401 | Fax: (416) 754-8668 | Email: sales@amphenolcanada.com
All specifications are subject to change without notice. Catalogue is updated regularly. Please refer to www.amphenolcanada.com for the most recent edition.

RJE29

TAB UP, SLIM PROFILE

TAB UP, SLIM PROFILE

RJE29 series is designed to meet a wide variety of applications. Available in multiple positions and contacts to support basic telecom and Ethernet protocols. Shielding is available for increased EMI performance.

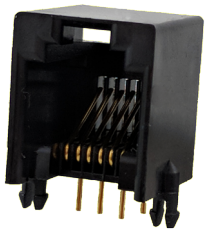

SPECIFICATIONS

Material

Insulator:	High temp. thermoplastic; Complies with UL 94V-0; Black
Contacts:	Phosphor bronze hard temper with gold thickness options (6µ", 15µ", 30µ", 50µ") over 50µ" min. nickel on contact mating area; 100µ" min. matte tin plating on soldering tail
Shield:	Stainless steel with tin dipped tails
LED:	Tin plating on LED tails

Electrical

Contact Resistance:	40 mΩ max.
Insulation resistance:	500 MΩ min. at 100V DC
Current Rating:	1.5 Amps
Voltage Rating:	150 Volts AC
DWV:	1000 VAC, 60 Hz. 1 min.

Mechanical

Insertion Force:	4 contacts: 1.8 Kgf Max 6 contacts: 2.1 Kgf Max 8 contacts: 2.3 Kgf Max 10 contacts: 2.5Kgf Max
Pull Retention Force:	20 lbs min.
Durability:	750 mating & unmating cycles with 50u"
Recommended Soldering Temperature:	Wave soldering peaked at 260°C for 5 secs max.
Operating Temperature:	-40°C to + 85°C
UL File Number:	E136228

ORDERING INFORMATION

RJE29 - 1 X X - X X X X

Number of Ports
1 - 1 Port

Number of Positions
4 - 4 Positions
6 - 6 Positions
8 - 8 Positions

Number of Contacts
4 - 4 Positions
6 - 6 Positions
8 - 8 Positions

Modifier
0 - Standard product
1 - 15mm housing depth

Panel Stop Options
1 - Without panel stops
2 - With panel stops

Contact Plating
1 - 6µ" gold plating
2 - 15µ" gold plating
3 - 30µ" gold plating
4 - 50µ" gold plating

Shield Options
0 - No shield
1 - Shield with no EMI tabs

Didn't find what you were looking for?
Please contact sales@amphenolcanada.com and let us know what you need.

Click to Return to Table of Contents

RJE29

TAB UP, SLIM PROFILE

Single Port

Non-Shielded

RJE29-144-0X10

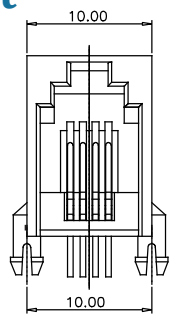

FRONT VIEW

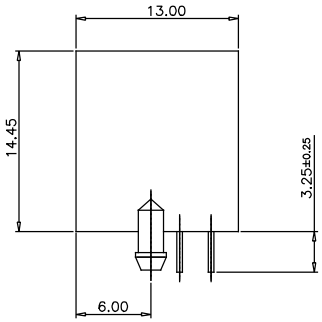

SIDE VIEW

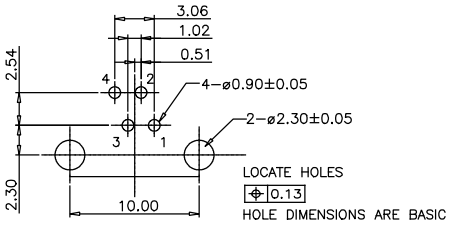

RECOMMENDED PCB LAYOUT

Non-Shielded

RJE29-166-0X10

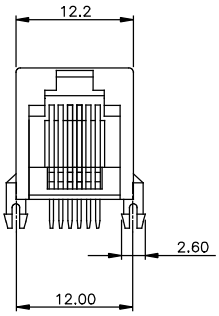

FRONT VIEW

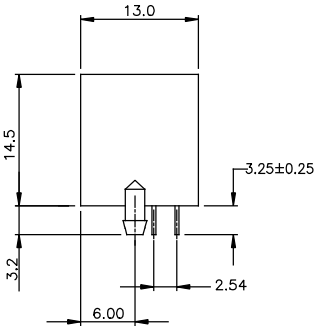

SIDE VIEW

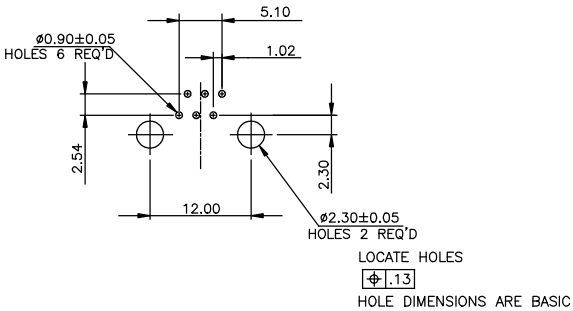

RECOMMENDED PCB LAYOUT

Non-Shielded

RJE29-188-0X10

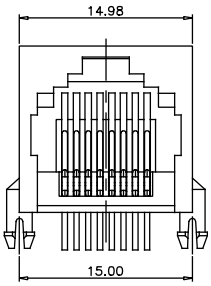

FRONT VIEW

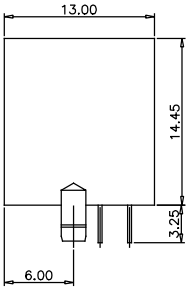

SIDE VIEW

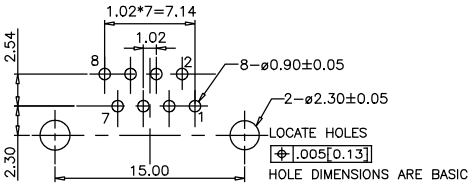

RECOMMENDED PCB LAYOUT

Shielded

RJE29-188-1X10

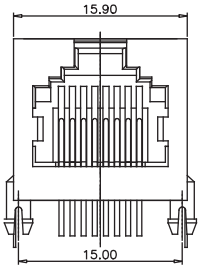

FRONT VIEW

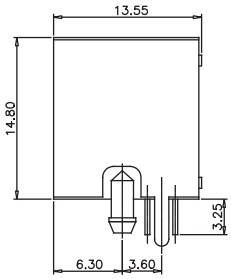

SIDE VIEW

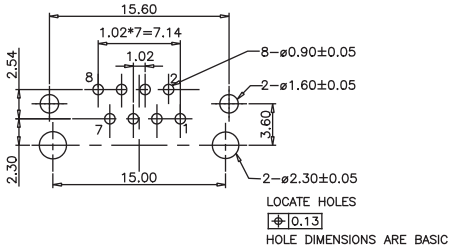

RECOMMENDED PCB LAYOUT

Amphenol Commercial Products - Amphenol Canada Corp. | Telephone: (416) 291-4401 | Fax: (416) 754-8668 | Email: sales@amphenolcanada.com
All specifications are subject to change without notice. Catalogue is updated regularly. Please refer to www.amphenolcanada.com for the most recent edition.

RJE37

TAB UP, SINGLE PORT, LOW PROFILE, WITH LEDs

TAB UP, SINGLE PORT, LOW PROFILE, WITH LEDs

Single port through-hole (THT) series with multiple shield and LED options. Similar to our single port RJHSE series, but with a slightly lower profile and longer body. Inverted latch orientation for easy mating with industry standard plugs.

SPECIFICATIONS

Material

Insulator:	High temp. thermoplastic; Complies with UL 94V-0; Black
Contacts:	Phosphor bronze hard temper with gold thickness options (6µ", 15µ", 30µ", 50µ") over 50µ" min. nickel on contact mating area; 100µ" min. matte tin plating on soldering tail
Shield:	Stainless steel with tin dipped tails
LED:	Tin plating on LED tails

Mechanical

Insertion Force:	5 lbs max.
Pull Retention Force:	20 lbs min.
Durability:	750 mating & unmating cycles
Recommended Soldering Temperature:	Wave soldering peaked at 260°C for 5 secs max.
Operating Temperature:	-55°C to + 85°C
UL File Number:	E135615

Note: Connectors without LEDs are suitable for IR Reflow

Electrical

Contact Resistance:	20 mΩ max.
Insulation resistance:	500 MΩ min. at 500V DC for 2 mins max.
Current Rating:	1.5 Amps per contact
Voltage Rating:	125 Volts AC
DWV:	1000 VAC, 60 Hz. 1 min.
LED Forward DC Current :	20mA typical
LED Forward Voltage:	2.6 Volts max. at 2mA
LED Reverse Voltage:	5 Volts min.
LED Light Intensity:	0.4 to 1.5 mcd min. at 2mA (for single colours) 0.5 mcd min. at 2mA (for bicolours)
LED Wave Length:	Yellow: 585 ± 7 nm measured at 20mA Green: 568 ± 6 nm measured at 20mA Red: 640 ± 5 nm measured at 20mA

ORDERING INFORMATION

RJE37 - 1 8 8 - X X X 0

Number of Ports
1 - 1 Port

Number of Positions
8 - 8 Positions

Number of Contacts
8 - 8 Contacts

Shield Options
0 - No shield
1 - Shield with top and side tabs
2- Shield with top tabs only

Modifier
0 - Standard product

LED Options
Click to view page 3 for options

Contact Plating
1 - 6µ" gold plating
2 - 15µ" gold plating
3 - 30µ" gold plating
4 - 50µ" gold plating

Didn't find what you were looking for?
Please contact sales@amphenolcanada.com and let us know what you need.

Click to Return to Table of Contents

RJE37

TAB UP, SINGLE PORT, LOW PROFILE, WITH LEDs

Single Port

Non-Shielded

RJE37-188-0XX0

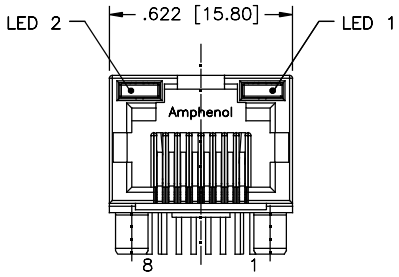

FRONT VIEW

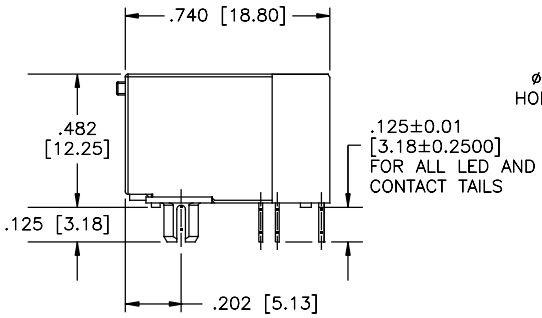

SIDE VIEW

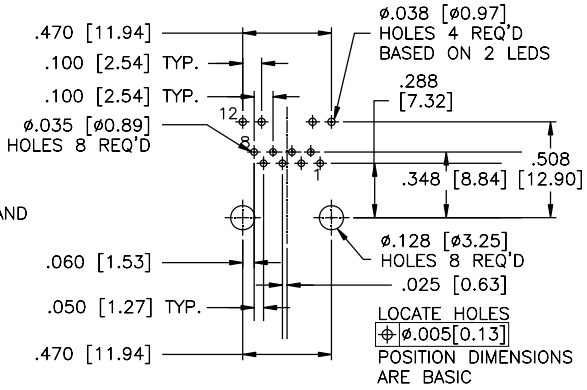

RECOMMENDED PCB LAYOUT

Shielded - With Full Tabs

RJE37-188-1XX0

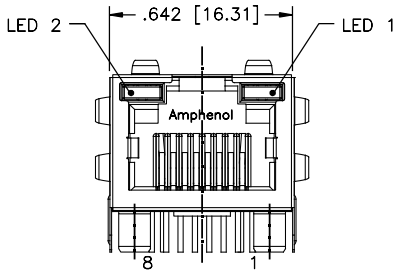

FRONT VIEW

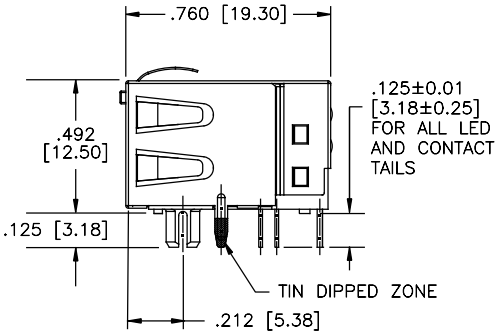

SIDE VIEW

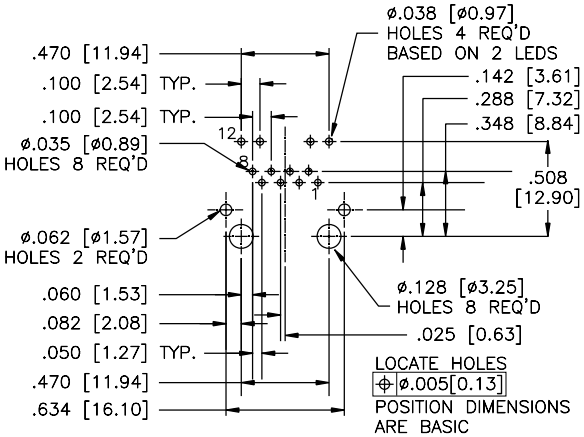

RECOMMENDED PCB LAYOUT

Shielded - With Top Tabs Only

RJE37-188-2XX0

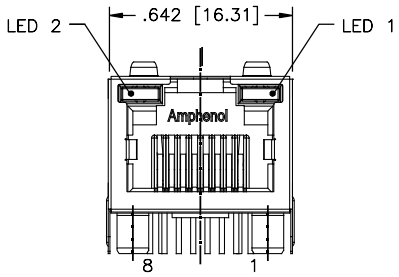

FRONT VIEW

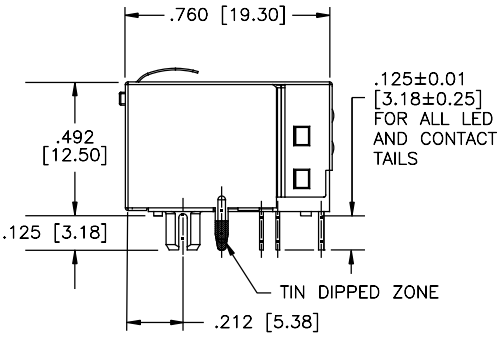

SIDE VIEW

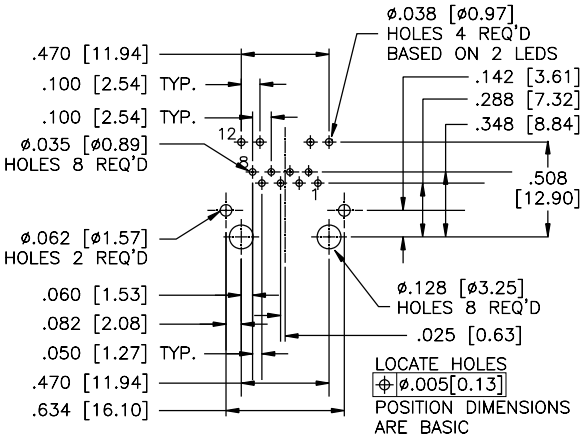

RECOMMENDED PCB LAYOUT

Amphenol Commercial Products - Amphenol Canada Corp. | Telephone: (416) 291-4401 | Fax: (416) 754-8668 | Email: sales@amphenolcanada.com
All specifications are subject to change without notice. Catalogue is updated regularly. Please refer to www.amphenolcanada.com for the most recent edition.

RJE39

TAB UP, NARROW, TWO AND EIGHT PORT

TAB UP, NARROW, TWO AND EIGHT PORT

Single and eight port through-hole (THT) series with multiple shield and LED options. Similar to the RJHSE series, but with a narrower profile. This series is ideal for programs that need multiple connectors, but have limited PCB space.

SPECIFICATIONS

Material

Insulator:	High temp. thermoplastic; Complies with UL 94V-0; Black
Contacts:	Phosphor bronze hard temper with gold thickness options (6µ", 15µ", 30µ", 50µ") over 50µ" min. nickel on contact mating area; 100µ" min. matte tin plating on soldering tail
Shield:	Stainless steel with tin dipped tails
LED:	Tin plating on LED tails

Mechanical

Insertion Force:	5 lbs max.
Pull Retention Force:	20 lbs min.
Durability:	750 mating & unmating cycles
Recommended Soldering Temperature:	Wave soldering peaked at 260°C for 5 secs max.
Operating Temperature:	-55°C to + 85°C
UL File Number:	E135615

Note: Connectors without LEDs are suitable for IR Reflow

Electrical

Contact Resistance:	20 mΩ max.
Insulation resistance:	500 MΩ min. at 500V DC for 2 mins max.
Current Rating:	1.5 Amps per contact
Voltage Rating:	125 Volts AC
DWV:	1000 VAC, 60 Hz. 1 min.
LED Forward DC Current:	20mA typical
LED Forward Voltage:	2.6 Volts max. at 2mA (for single colour)
LED Reverse Voltage:	5 Volts min.
LED Light Intensity:	4.5 to 6.0 mcd min. at 20mA (for single colours)
LED Wave Length:	Yellow: 588 ± 7 nm measured at 20mA Green: 570 ± 6 nm measured at 20mA Red: 628 ± 5 nm measured at 20mA

ORDERING INFORMATION

RJE39 - X 8 8 - X X X 0

Number of Ports
2 - 2 Port
8 - 8 Port

Number of Positions
8 - 8 Positions

Number of Contacts
8 -8 Contacts

Shield Options
0 - No shield
1 - Shield with top and side tabs

Modifier
0 - Standard product

LED Options
Click to view page 3 for options

Contact Plating
1 - 6µ" gold plating
2 - 15µ" gold plating
3 - 30µ" gold plating
4 - 50µ" gold plating

Didn't find what you were looking for?
Please contact sales@amphenolcanada.com and let us know what you need.

Click to Return to Table of Contents

RJE39

TAB UP, NARROW, TWO AND EIGHT PORT

Two Port

Shielded

RJE39-288-1XX0

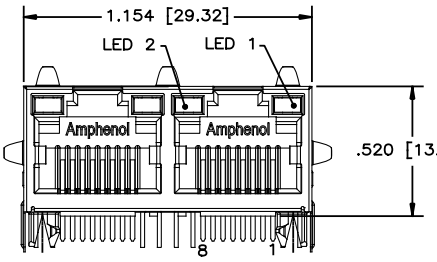

FRONT VIEW

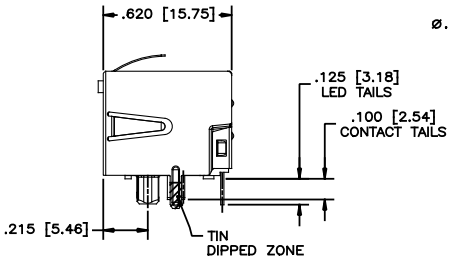

SIDE VIEW

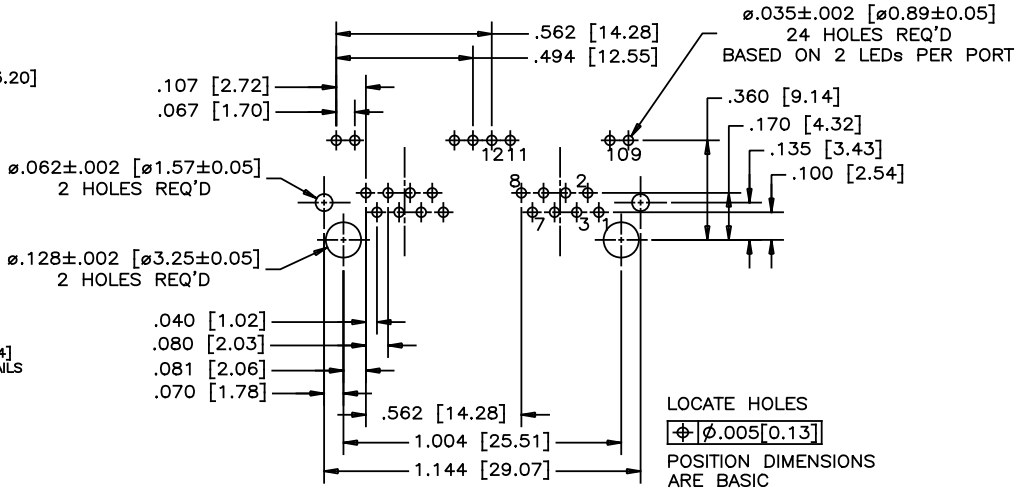

RECOMMENDED PCB LAYOUT

Eight Port

Shielded

RJE39-888-1XX0

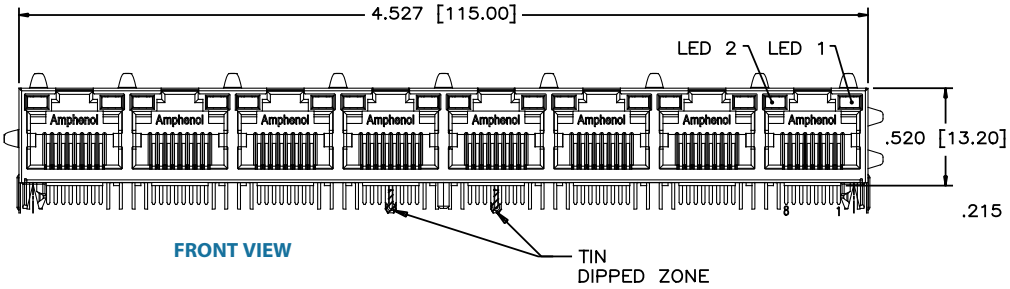

FRONT VIEW

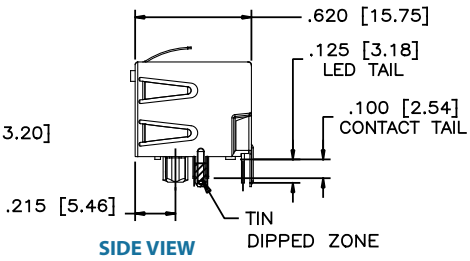

SIDE VIEW

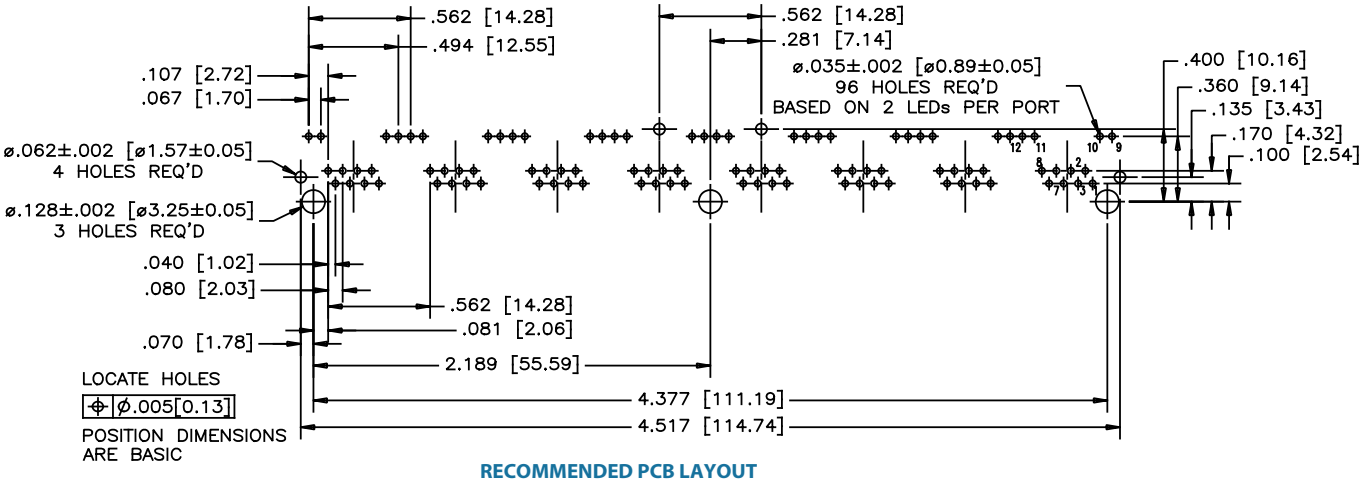

RECOMMENDED PCB LAYOUT

Amphenol Commercial Products - Amphenol Canada Corp. | Telephone: (416) 291-4401 | Fax: (416) 754-8668 | Email: sales@amphenolcanada.com
All specifications are subject to change without notice. Catalogue is updated regularly. Please refer to www.amphenolcanada.com for the most recent edition.

RJE01

TAB UP, RJ11 (SIX POSITION)

TAB UP, RJ11 (SIX POSITION)

The RJE01 series of 6-position jacks are designed for superior EMI performance. The inverted connector provides shorter leads, eliminating the EMI antenna effect of the standard connector footprint. Typical performance improvement over their standard connector counterparts is 5-10 dB over the frequency range.

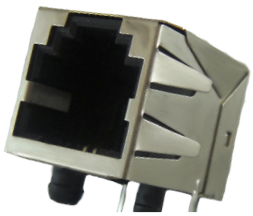

SPECIFICATIONS

Material

Insulator:	High temp. thermoplastic; Complies with UL 94V-0; Black
Contacts:	Phosphor bronze hard temper with gold thickness options (6µ", 15µ", 30µ", 50µ") over 50µ" min. nickel on contact mating area; 100µ" min. matte tin plating on soldering tail
Shield:	Stainless steel with tin dipped tails

Electrical

Contact Resistance:	20 mΩ max.
Insulation resistance:	500 MΩ min. at 500V DC for 2 mins max.
Current Rating:	1.5 Amps per contact
Voltage Rating:	125 Volts AC
DWV:	1000 VAC, 60 Hz. 1 min.

Mechanical

Insertion Force:	5 lbs max.
Pull Retention Force:	20 lbs min.
Durability:	750 mating & unmating cycles
Recommended Soldering Temperature:	Wave soldering peaked at 260°C for 5 secs max.
Operating Temperature:	-55°C to + 85°C
UL File #:	E135615
CSA File #:	LR685398

ORDERING INFORMATION

RJE01 - X X X - XX

Contact Plating
- 1 - 6µ" gold plating
- G -15µ" gold plating
- J - 30µ" gold plating
- 6 - 50µ" gold plating

Number of Contacts
- 2 - 2 Contacts
- 4 - 4 Contacts
- 6 - 6 Contacts

Number of Ports
- 01 - 1 Port
- 02 - 2 Port

Shield Options
- 0 - No Shield
- 1 - Shield with top and side EMI tabs
- 2 - Shield with side & PCB tails
- 4 - Shield without tabs & PCB tails
- 5 - Shield without tabs, with rear PCB tails

Didn't find what you were looking for?
Please contact sales@amphenolcanada.com and let us know what you need.

Click to Return to Table of Contents

RJE01

TAB UP, RJ11 (SIX POSITION)

Single Port

Non-Shielded

RJE01-X60-01

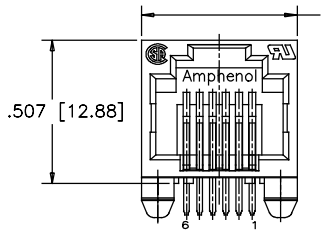

FRONT VIEW

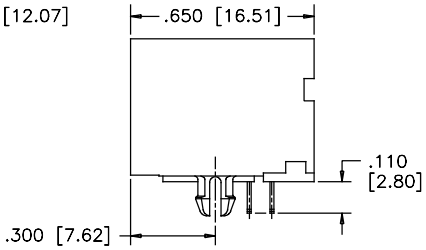

SIDE VIEW

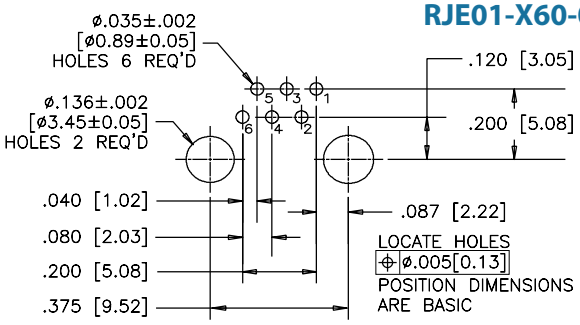

RECOMMENDED PCB LAYOUT

Shielded

RJE01-X62-01

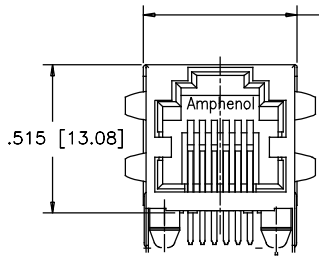

FRONT VIEW

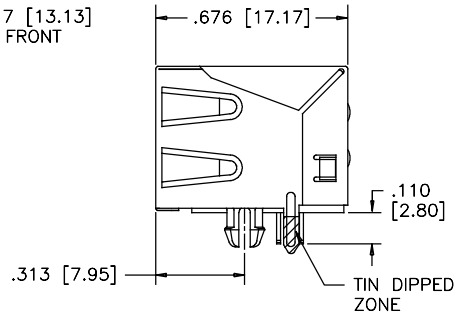

SIDE VIEW

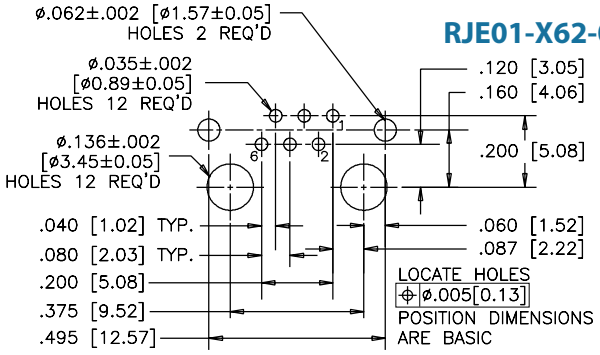

RECOMMENDED PCB LAYOUT

Multi Port

Non-Shielded

RJE01-X60-02

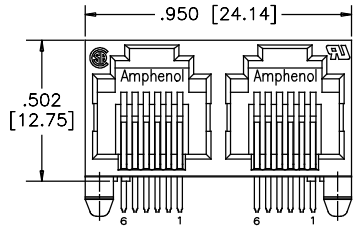

FRONT VIEW

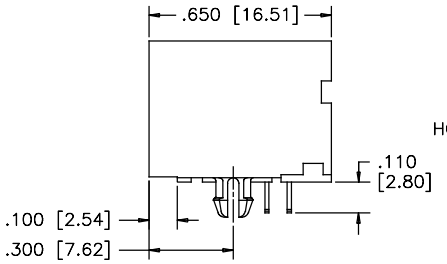

SIDE VIEW

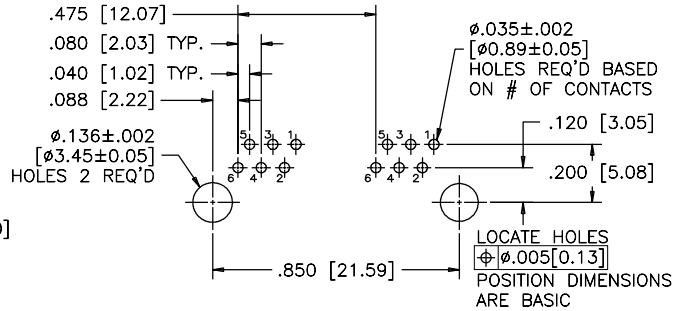

RECOMMENDED PCB LAYOUT

Shielded

RJE01-X62-02

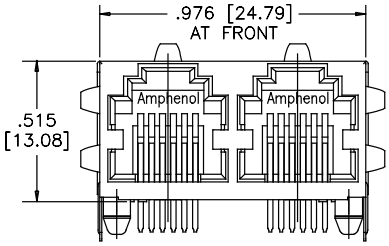

FRONT VIEW

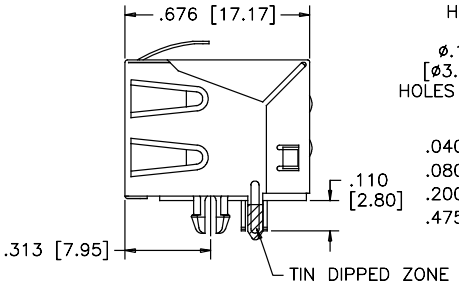

SIDE VIEW

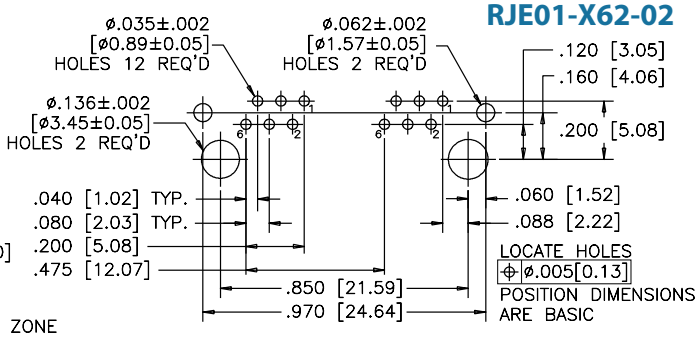

RECOMMENDED PCB LAYOUT

Amphenol Commercial Products - Amphenol Canada Corp. | Telephone: (416) 291-4401 | Fax: (416) 754-8668 | Email: sales@amphenolcanada.com
All specifications are subject to change without notice. Catalogue is updated regularly. Please refer to www.amphenolcanada.com for the most recent edition.

RJSBE

TAB DOWN, 1, 2 AND 4 PORT WITH LEDs

TAB DOWN, 1, 2 AND 4 PORT WITH LEDs

The RJSBE series of modular jacks supports Ethernet Protocols. Shielding is available with or without a ferrite filter for increased EMI performance and LEDs for link activity and network speed verification.

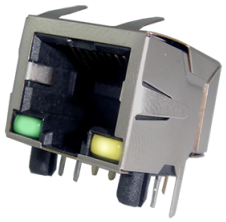

SPECIFICATIONS

Material

Insulator:	High temp. thermoplastic; Complies with UL 94V-0; Black
Contacts:	Phosphor bronze hard temper with gold thickness options (6µ", 15µ", 30µ", 50µ") over 50µ" min. nickel on contact mating area; 100µ" min. matte tin plating on soldering tail
Shield:	Copper alloy; nickel plated with tin dipped tails
LED:	Tin plating on LED tails

Mechanical

Insertion Force:	5 lbs max.
Pull Retention Force:	20 lbs min.
Durability:	750 mating & unmating cycles
Recommended Soldering Temperature:	Wave soldering peaked at 260°C for 5 secs max.
Operating Temperature:	-55°C to + 85°C
UL File #:	E135615
CSA File #:	LR685398

Note: Connectors without LEDs are suitable for IR Reflow

Electrical

Contact Resistance:	20 mΩ max.
Insulation resistance:	500 MΩ min. at 500V DC for 2 mins max.
Current Rating:	1.5 Amps per contact
Voltage Rating:	125 Volts AC
DWV:	1000 VAC, 60 Hz. 1 min.
LED Forward DC Current:	20mA typical
LED Forward Voltage:	1.9 Volts max. at 2mA (for single colours) 2.6 Volts max. at 2mA (for bicolours)
LED Reverse Voltage:	5 Volts min.
LED Light Intensity:	0.4 to 1.5 mcd min. at 2mA (for single colours) 0.5 mcd min. at 2mA (for bicolours)
LED Wave Length:	Yellow: 587 ± 7 nm measured at 20mA Green: 565 ± 6 nm measured at 20mA Red: 625 ± 5 nm measured at 20mA

ORDERING INFORMATION

RJSBE - X X X X - C X

Version
- 5 - 8 Positions, 50µ" gold plating
- 7 - 6 Positions, 50µ" gold plating
- D - 8 Positions, 6µ" gold plating
- G - 8 Positions, 15µ" gold plating
- J - 8 Positions, 30µ" gold plating

Shield Options
- 0 - No shield
- 2 - Shield with top and side tabs, filtered
- 3 - Shield with top and side tabs, no filter
- F - Shield with no tabs, no filter

Number of Ports
- Blank - 1 Port
- 02 - 2 Ports
- 04 - 4 Ports

LED Options
- Click to view page 3 for options

Number of Contacts
- 4 - 4 Contacts
- 6 - 6 Contacts
- 8 - 8 Contacts

Didn't find what you were looking for?
Please contact sales@amphenolcanada.com and let us know what you need.

Click to Return to Table of Contents

RJSBE

TAB DOWN, 1, 2 AND 4 PORT WITH LEDs

Single Port

RJSBE-508X-C1

Non-Shielded

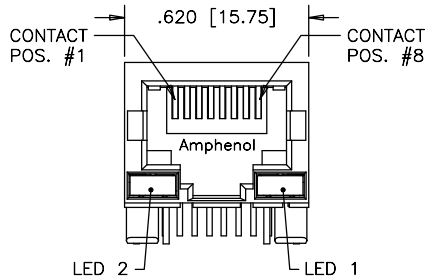

FRONT VIEW

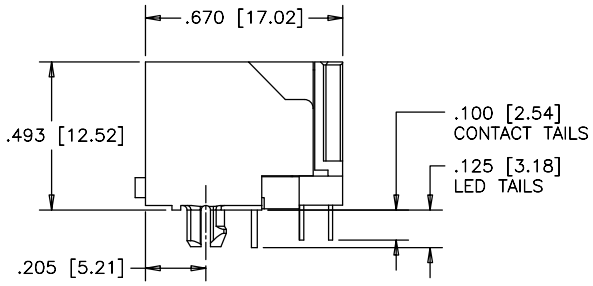

SIDE VIEW

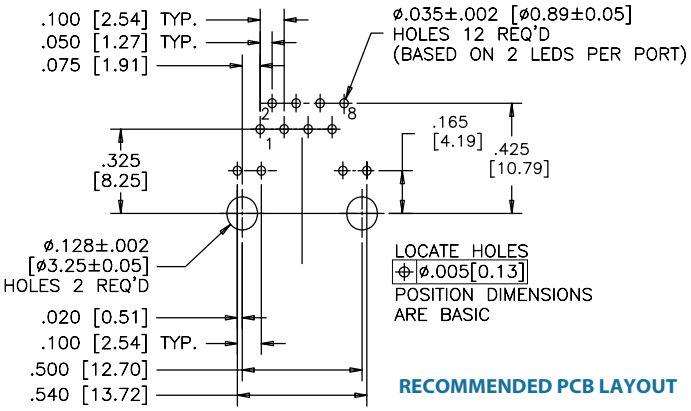

RECOMMENDED PCB LAYOUT

Shielded

RJSBE-538X-C1

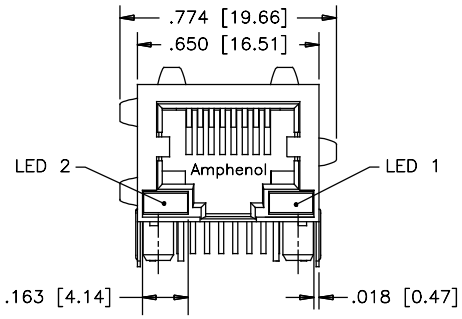

FRONT VIEW

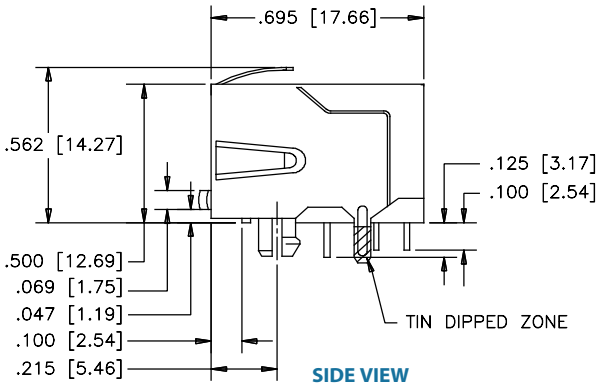

SIDE VIEW

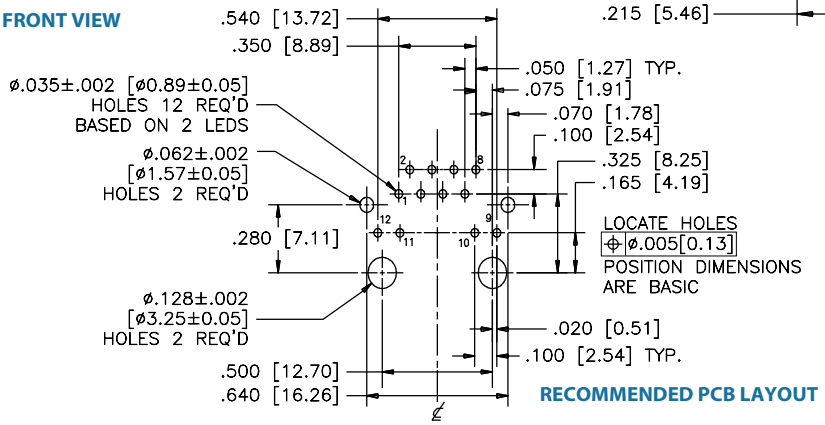

RECOMMENDED PCB LAYOUT

Amphenol Commercial Products - Amphenol Canada Corp. | Telephone: (416) 291-4401 | Fax: (416) 754-8668 | Email: sales@amphenolcanada.com
All specifications are subject to change without notice. Catalogue is updated regularly. Please refer to www.amphenolcanada.com for the most recent edition.

RJSBE

TAB DOWN, 1, 2 AND 4 PORT WITH LEDs

Multi Port

Non-Shielded

RJSBE-508X-C4

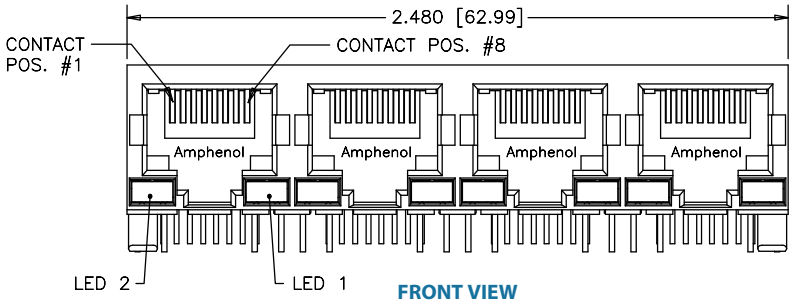

FRONT VIEW

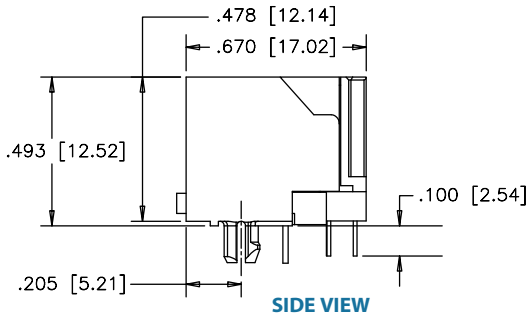

SIDE VIEW

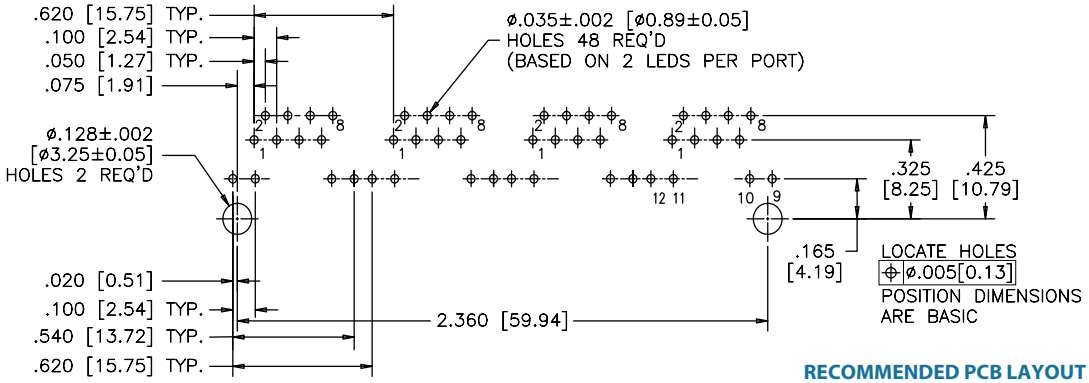

RECOMMENDED PCB LAYOUT

Multi Port

Shielded

RJSBE-538X-C4

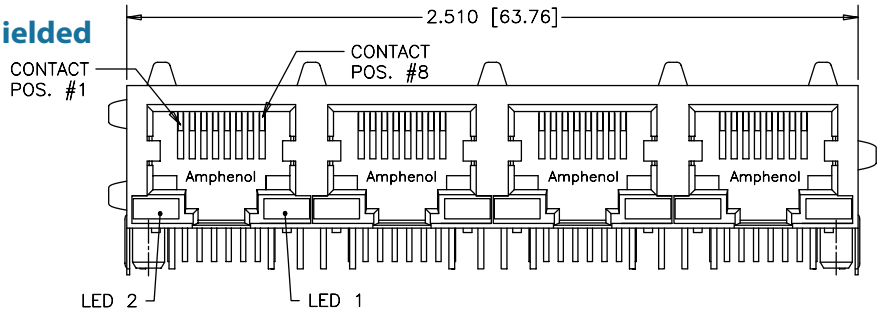

FRONT VIEW

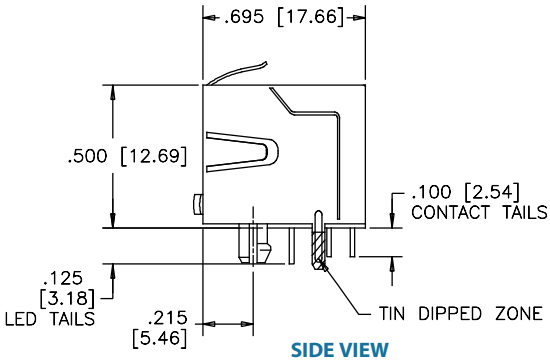

SIDE VIEW

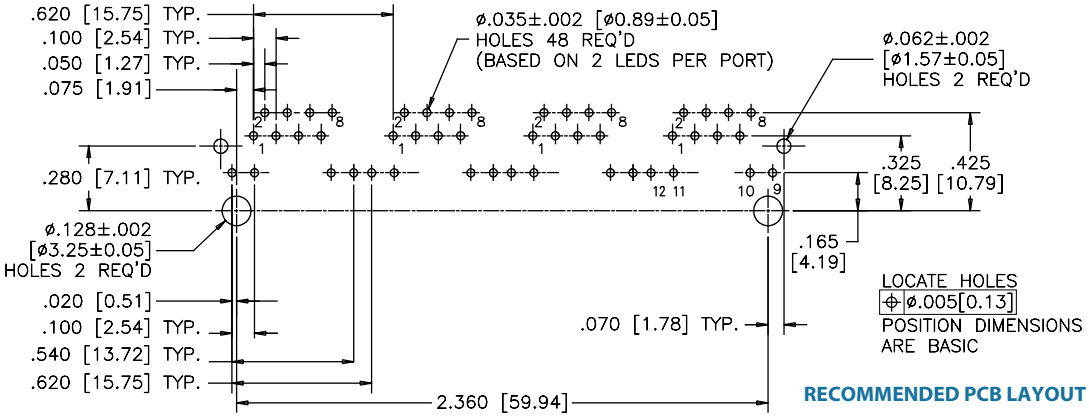

RECOMMENDED PCB LAYOUT

FRJAE

TAB DOWN, FILTERED AND SHIELDED

TAB DOWN, FILTERED AND SHIELDED

The FRJAE series of shielded and filtered modular jacks offer low cost and effective EMC control within standard RJ11 & RJ45 connector footprints. EMC control is offered by a completely shielded connector and/or with the use of a high resistivity, high impedance ferrite filter. No board layout changes are required for its use. Simply replace the standard non-filtered connector for superior EMC performance.

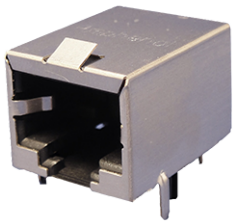

SPECIFICATIONS

Material

Insulator:	High temp. thermoplastic; Complies with UL 94V-0; Black
Contacts:	Phosphor bronze hard temper with gold thickness options (6µ", 15µ", 30µ", 50µ") over 50µ" min. nickel on contact mating area; 100µ" min. matte tin plating on soldering tail
Shield:	Copper alloy; nickel plated with tin dipped tails
Filter:	High impedance, high resistivity ferrite filter

IMPEDANCE CHARACTERISTICS

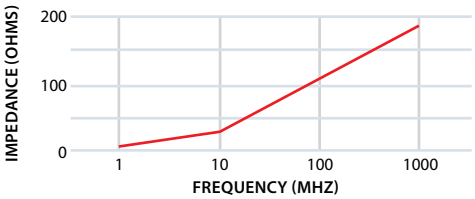

Electrical

Contact Resistance:	20 mΩ max.
Insulation resistance:	500 MΩ min. at 500V DC for 2 mins max.
Current Rating:	1.5 Amps per contact
Voltage Rating:	125 Volts AC
DWV:	1000 VAC, 60 Hz. 1 min.

Mechanical

Insertion Force:	5 lbs max.
Pull Retention Force:	20 lbs min.
Durability:	750 mating & unmating cycles
Recommended Soldering Temperature:	Wave soldering peaked at 260°C for 5 secs max.
Operating Temperature:	-55°C to + 85°C
UL File #:	E135615
CSA File #:	LR68598

ORDERING INFORMATION

FRJAE - X X X - XX

Version
- 4 - 8 Positions
- 6 - 6 Positions

Shield Options
- 0 - Non-filtered without shield
- 1 - Filtered with front tab shield
- 3 - Non-filtered with front tab shield
- 4 - Filtered without shield
- 6 - Filtered with rear tab shield
- 7 - Filtered without PCB tails shield
- 8 - Non-filtered with rear tab shield

Number of Ports
- Blank - 1 Port
- 02 - 2 Ports
- 04 - 4 Ports
- 06 - 6 Ports
- 08 - 8 Ports

Number of Contacts
- 2 - 2 Contacts
- 4 - 4 Contacts
- 6 - 6 Contacts
- 8 - 8 Contacts

Didn't find what you were looking for?
Please contact sales@amphenolcanada.com and let us know what you need.

Click to Return to Table of Contents

Amphenol Commercial Products - Amphenol Canada Corp. | Telephone: (416) 291-4401 | Fax: (416) 754-8668 | Email: sales@amphenolcanada.com
All specifications are subject to change without notice. Catalogue is updated regularly. Please refer to www.amphenolcanada.com for the most recent edition.

FRJAE

TAB DOWN, FILTERED AND SHIELDED

Single Port

Non-Shielded

FRJAE-A408

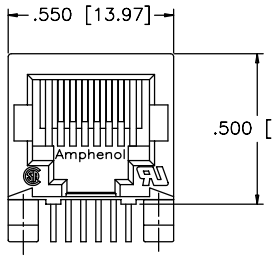

FRONT VIEW

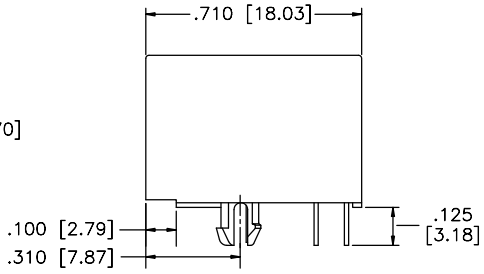

SIDE VIEW

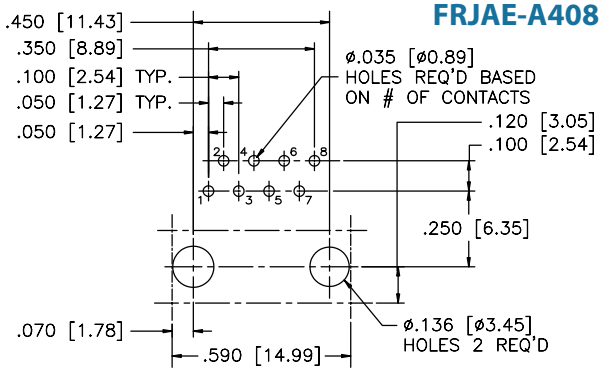

RECOMMENDED PCB LAYOUT

Shielded

FRJAE-438

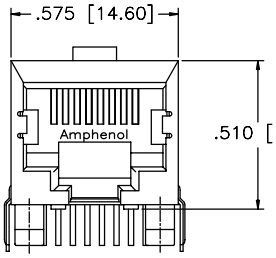

FRONT VIEW

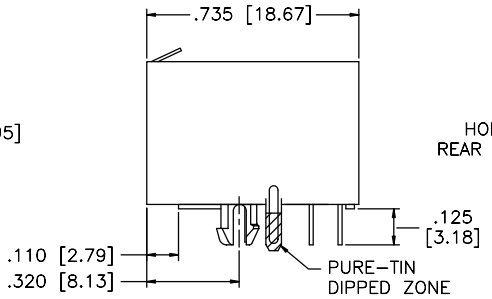

SIDE VIEW

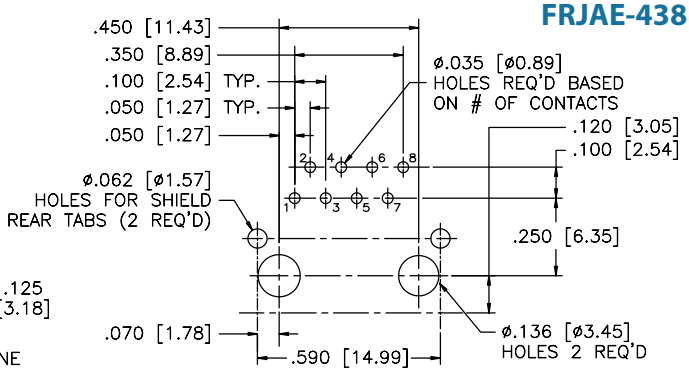

RECOMMENDED PCB LAYOUT

Multi Port

Non-Shielded

FRJAE-4X8-0X

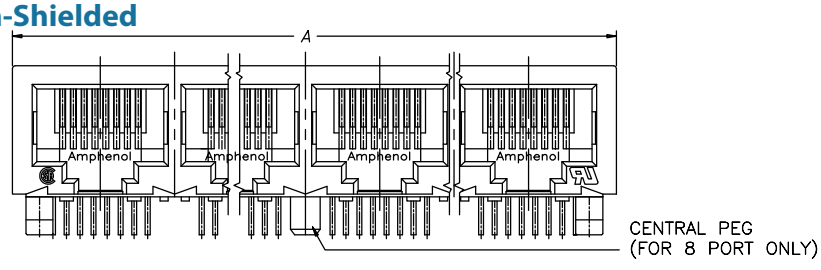

FRONT VIEW

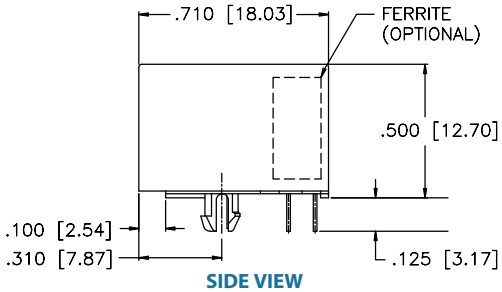

SIDE VIEW

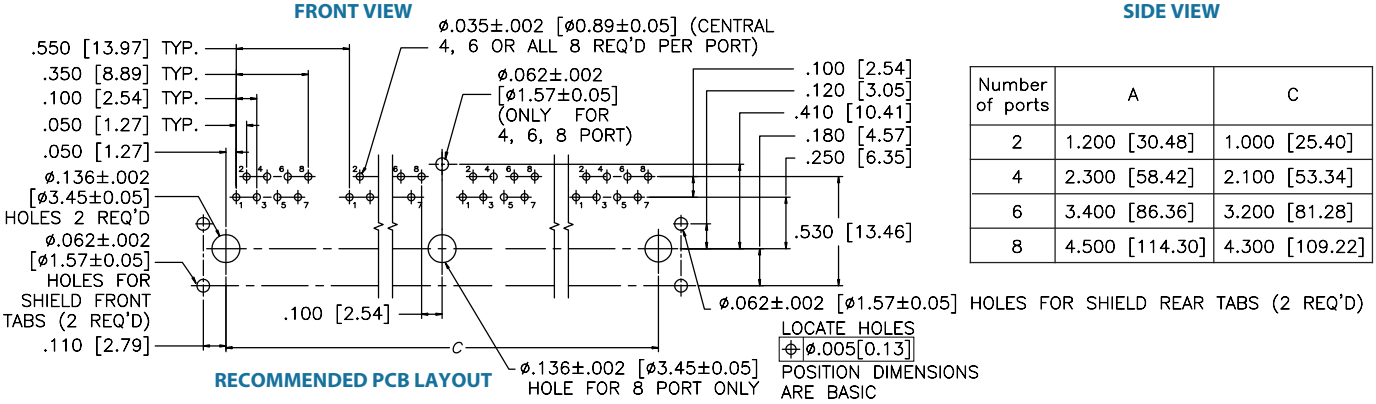

RECOMMENDED PCB LAYOUT

Number of ports	A	C
2	1.200 [30.48]	1.000 [25.40]
4	2.300 [58.42]	2.100 [53.34]
6	3.400 [86.36]	3.200 [81.28]
8	4.500 [114.30]	4.300 [109.22]

FRJAE

TAB DOWN, FILTERED AND SHIELDED

Multi Port

FRJAE-418-0X

Shielded

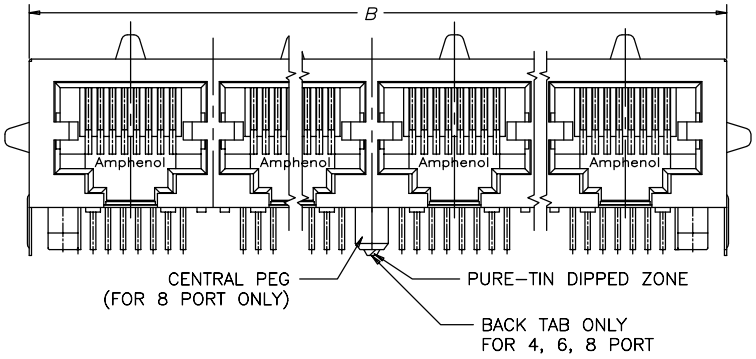

FRONT VIEW

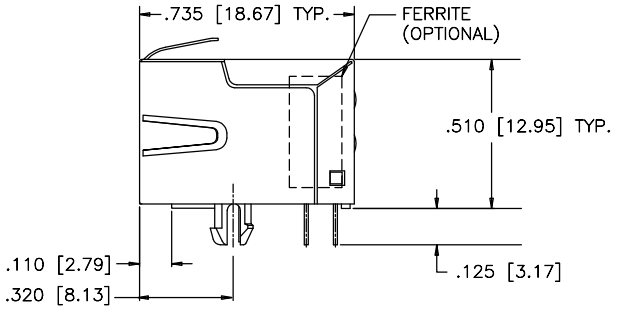

SIDE VIEW

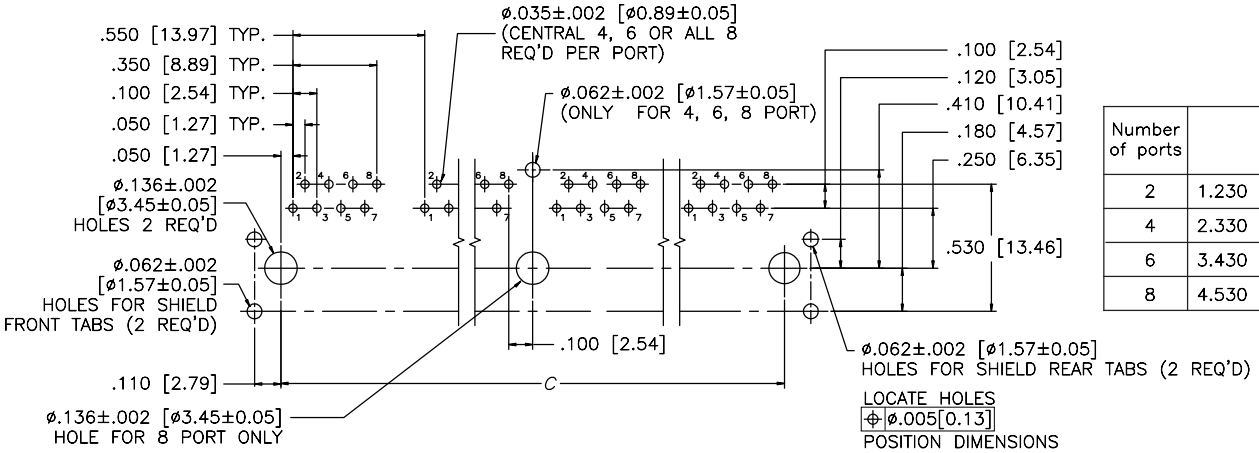

RECOMMENDED PCB LAYOUT

Number of ports	B	C
2	1.230 [31.24]	1.000 [25.40]
4	2.330 [59.18]	2.100 [53.34]
6	3.430 [87.12]	3.200 [81.28]
8	4.530 [115.06]	4.300 [109.22]

Notes

Amphenol Commercial Products - Amphenol Canada Corp. | **Telephone: (416) 291-4401** | **Fax: (416) 754-8668** | **Email:** sales@amphenolcanada.com
All specifications are subject to change without notice. Catalogue is updated regularly. Please refer to www.amphenolcanada.com for the most recent edition.

RJE02

TAB DOWN, SINGLE PORT, HIGH PROFILE

TAB DOWN, SINGLE PORT, HIGH PROFILE

RJE02 series is a group of products within a family of standard modular jacks designed to meet requirements for a variety of applications options within the RJE02 family include options with and without a panel stops, and RJ11 & RJ45 configurations.

SPECIFICATIONS

Material

Insulator:	High temp. thermoplastic; Complies with UL 94V-0; Black
Contacts:	Phosphor bronze hard temper with gold thickness options (6µ", 15µ", 30µ", 50µ") over 50µ" min. nickel on contact mating area; 100µ" min. matte tin plating on soldering tail
Shield:	Copper alloy; nickel plated with tin dipped tail

Electrical

Contact Resistance:	20 mΩ max.
Insulation resistance:	500 MΩ min. at 500V DC for 2 mins max.
Current Rating:	1.5 Amps per contact
Voltage Rating:	125 Volts AC
DWV:	1500 VAC, 60 Hz. 1 min.

Mechanical

Insertion Force:	5 lbs max.
Pull Retention Force:	20 lbs min.
Durability:	750 mating & unmating cycles
Recommended Soldering Temperature:	Wave soldering peaked at 260°C for 5 secs max.
Operating Temperature:	- 40°C to + 85°C
UL File Number:	E136228

Note: Connectors with high temp. material are suitable for IR Reflow

ORDERING INFORMATION

RJE02 - 1 X X - 0 X X 0

Number of Ports
1 - 1 Port

Number of Positions
4 - 4 Positions
6 - 6 Positions
8 - 8 Positions

Number of Contacts
2 - 2 Contacts
4 - 4 Contacts
6 - 6 Contacts

Modifier
0 - Standard product

Panel Stop Options
1 - Without panel stop
2 - With panel stop

Contact Plating
1 - 6µ" gold plating
2 - 15µ" gold plating
3 - 30µ" gold plating
4 - 50µ" gold plating

Shield Options
0 - No Shield

Didn't find what you were looking for?
Please contact sales@amphenolcanada.com and let us know what you need.

Click to Return to Table of Contents

RJE02

TAB DOWN, SINGLE PORT, HIGH PROFILE

Single Port

RJE02-1XX-0X20

Non-Shielded

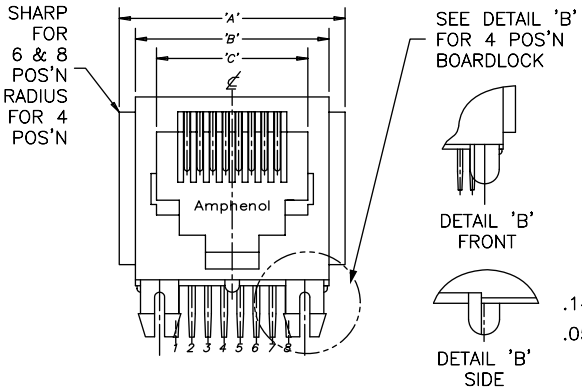

FRONT VIEW

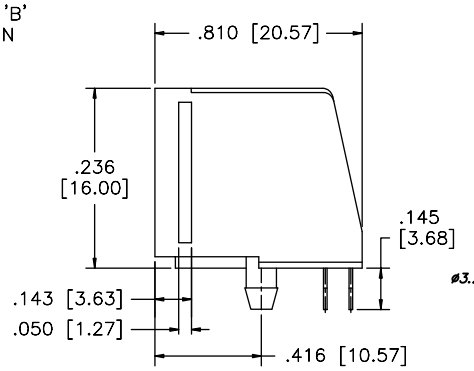

SIDE VIEW

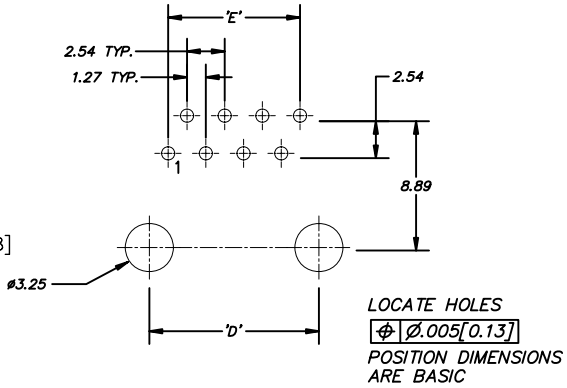

RECOMMENDED PCB LAYOUT

Part #	No. of Positions	No. of Contacts	Dimensions				
			A	B	C	D	E
RJE02–142–0X20	4	2	.540 [13.72]	.440 [11.18]	.309 [7.85]	.300 [7.62]	.050 [1.27]
RJE02–144–0X20	4	4	.540 [13.72]	.440 [11.18]	.309 [7.85]	.300 [7.62]	.150 [3.81]
RJE02–162–0X20	6	2	.620 [15.75]	.520 [13.21]	.389 [9.88]	.400 [10.16]	.050 [1.27]
RJE02–164–0X20	6	4	.620 [15.75]	.520 [13.21]	.389 [9.88]	.400 [10.16]	.150 [3.81]
RJE02–166–0X20	6	6	.620 [15.75]	.520 [13.21]	.389 [9.88]	.400 [10.16]	.150 [3.81]
RJE02–188–0X20	8	8	.700 [17.78]	.600 [15.24]	.469 [11.91]	.450 [11.43]	.350 [8.89]

Notes

Amphenol Commercial Products - Amphenol Canada Corp. | **Telephone: (416) 291-4401** | **Fax: (416) 754-8668** | **Email:** sales@amphenolcanada.com
All specifications are subject to change without notice. Catalogue is updated regularly. Please refer to www.amphenolcanada.com for the most recent edition.

RJE03

TAB DOWN, SINGLE PORT, LOW PROFILE

TAB DOWN, SINGLE PORT, LOW PROFILE

RE03 series is a group of products within a family of standard modular jacks designed to meet requirements for a variety of applications. Options within the RJE03 family include shielded and non-shielded, and RJ11 & RJ45 configurations.

SPECIFICATIONS

Material

Insulator:	High temp. thermoplastic; Complies with UL 94V-0; Black
Contacts:	Phosphor bronze hard temper with gold thickness options (6µ", 15µ", 30µ", 50µ") over 50µ" min. nickel on contact mating area; 100µ" min. matte tin plating on soldering tail
Shield:	Copper alloy; nickel plated with tin dipped tail

Electrical

Contact Resistance:	20 mΩ max.
Insulation resistance:	500 MΩ min. at 500V DC for 2 mins max.
Current Rating:	1.5 Amps per contact
Voltage Rating:	125 Volts AC
DWV:	1000 VAC, 60 Hz. 1 min.

Mechanical

Insertion Force:	5 lbs max.
Pull Retention Force:	20 lbs min.
Durability:	750 mating & unmating cycles
Recommended Soldering Temperature:	Wave soldering peaked at 260°C for 5 secs max.
Operating Temperature:	- 40°C to + 85°C
UL File Number:	E136228

Note: Connectors with high temp. material are suitable for IR Reflow

ORDERING INFORMATION

RJE03 - 1 X X - X X X 0

Number of Ports
1 - 1 Port

Number of Positions
4 - 4 Positions
6 - 6 Positions

Number of Contacts
2 - 2 Contacts
4 - 4 Contacts
6 - 6 Contacts
8 - 8 Contacts

Shield Options
0 - No Shield
2 - Partial shield (must have panel stop)

Modifier
0 - Standard product

Panel Stop Options
1 - Without panel stop
2 - With panel stop

Contact Plating
1 - 6µ" gold plating
2 - 15µ" gold plating
3 - 30µ" gold plating
4 - 50µ" gold plating

Didn't find what you were looking for?
Please contact sales@amphenolcanada.com and let us know what you need.

Click to Return to Table of Contents

RJE03

TAB DOWN, SINGLE PORT, LOW PROFILE

Single Port

Non-Shielded

RJE03-188-0X10

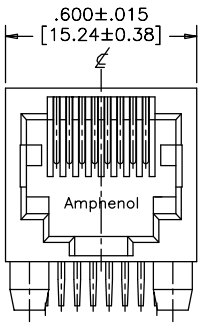

FRONT VIEW

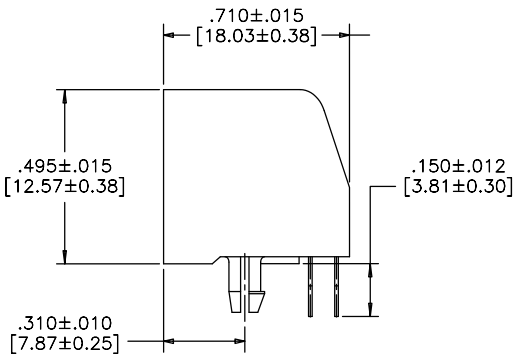

SIDE VIEW

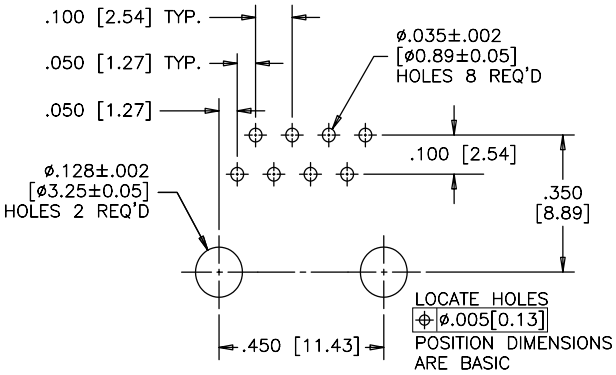

RECOMMENDED PCB LAYOUT

Shielded with Panel Stop

RJE03-188-2X20

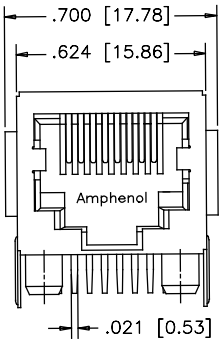

FRONT VIEW

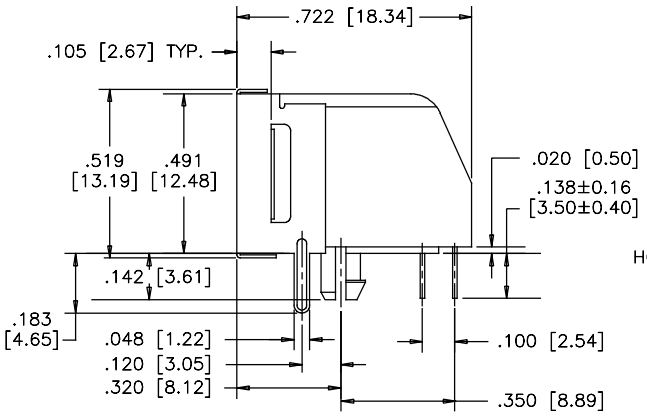

SIDE VIEW

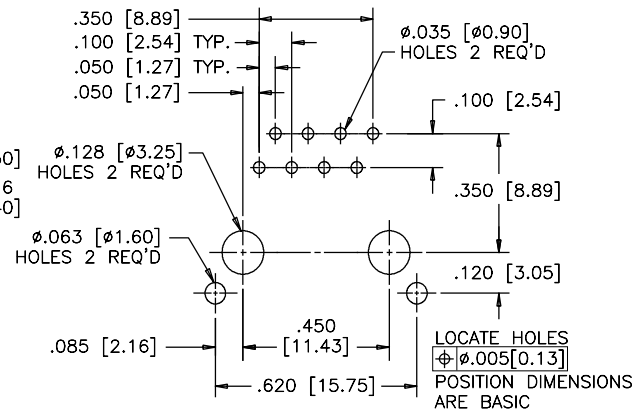

RECOMMENDED PCB LAYOUT

Notes

Amphenol Commercial Products - Amphenol Canada Corp. | **Telephone: (416) 291-4401** | **Fax: (416) 754-8668** | **Email:** sales@amphenolcanada.com
All specifications are subject to change without notice. Catalogue is updated regularly. Please refer to www.amphenolcanada.com for the most recent edition.

RJE05

TAB DOWN, ULTRA LOW PROFILE

TAB DOWN, ULTRA LOW PROFILE

RJE05 series is a group of products within a family of standard modular jacks designed to meet requirements for a variety of applications. Options within the RJE05 family include shielded or non-shielded, and RJ11 & RJ45 configurations.

SPECIFICATIONS

Material

Insulator:	High temp. thermoplastic; Complies with UL 94V-0; Black
Contacts:	Phosphor bronze hard temper with gold thickness options (6µ", 15µ", 30µ", 50µ") over 50µ" min. nickel on contact mating area; 100µ" min. matte tin plating on soldering tail
Shield:	Copper alloy; nickel plated with tin dipped tail

Electrical

Contact Resistance:	20 mΩ max.
Insulation resistance:	500 MΩ min. at 500V DC for 2 mins max.
Current Rating:	1.5 Amps per contact
Voltage Rating:	125 Volts AC
DWV:	1000 VAC, 60 Hz. 1 min.

Mechanical

Insertion Force:	5 lbs max.
Pull Retention Force:	20 lbs min.
Durability:	750 mating & unmating cycles
Recommended Soldering Temperature:	Wave soldering peaked at 260°C for 5 secs max.
Operating Temperature:	- 40°C to + 85°C
UL File #:	E135615

Note: Connectors with high temp material are suitable for IR Reflow

ORDERING INFORMATION

RJE05 - 1 X X - X X 1 0

Number of Ports
1 - 1 Port

Number of Positions
4 - 4 Positions
6 - 6 Positions
8 - 8 Positions
A - 10 Positions

Number of Contacts
2 - 2 Contacts
4 - 4 Contacts
6 - 6 Contacts
8 - 8 Contacts
A - 10 Contacts

Modifier
0 - Standard product

Panel Stop Options
1 - No panel stop

Contact Plating
1 - 6µ" gold plating
2 - 15µ" gold plating
3 - 30µ" gold plating
4 - 50µ" gold plating

Shield Options
0 - No shield
1 - Shield with front PCB tabs, no top or side tabs
5 - Shield with top, side, and front PCB tabs
8 - Shield with rear PCB tabs, no top or side tabs

Didn't find what you were looking for?
Please contact sales@amphenolcanada.com and let us know what you need.

Click to Return to Table of Contents

RJE05

TAB DOWN, ULTRA LOW PROFILE

Single Port

Non-Shielded

RJE05-188-0X10

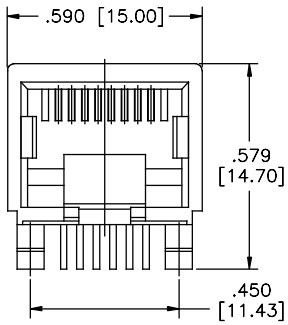

FRONT VIEW

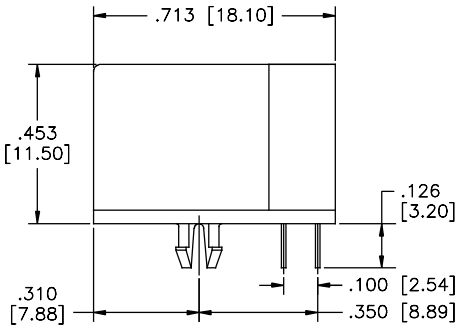

SIDE VIEW

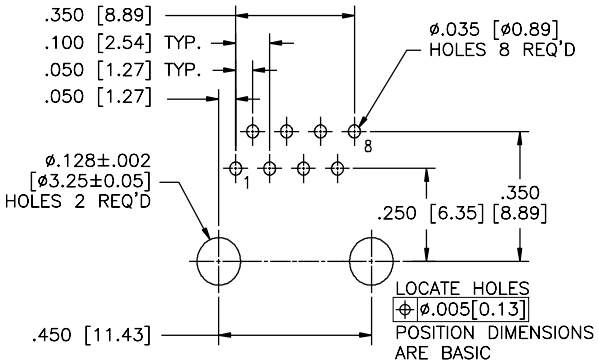

RECOMMENDED PCB LAYOUT

Shielded with Front PCB Tabs

RJE05-188-1X10

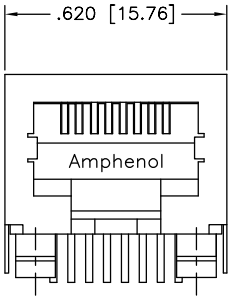

FRONT VIEW

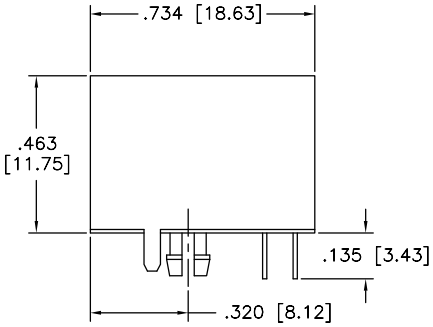

SIDE VIEW

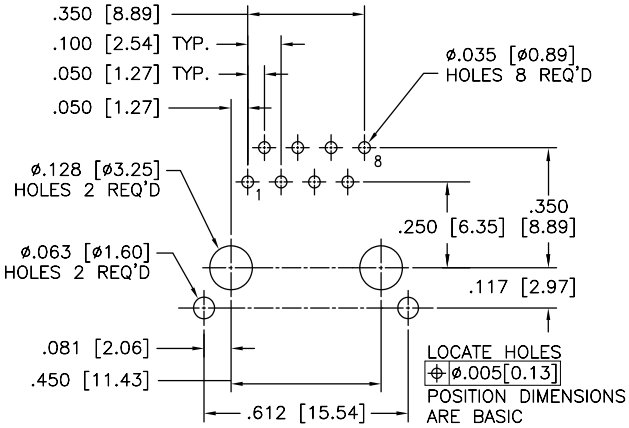

RECOMMENDED PCB LAYOUT

Shielded with Top, Side, and Front PCB Tabs

RJE05-188-5X10

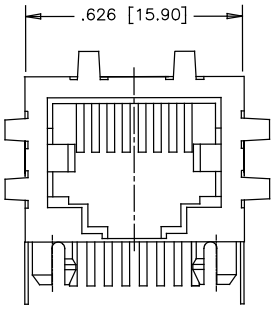

FRONT VIEW

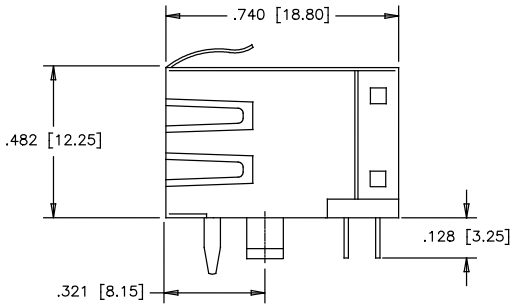

SIDE VIEW

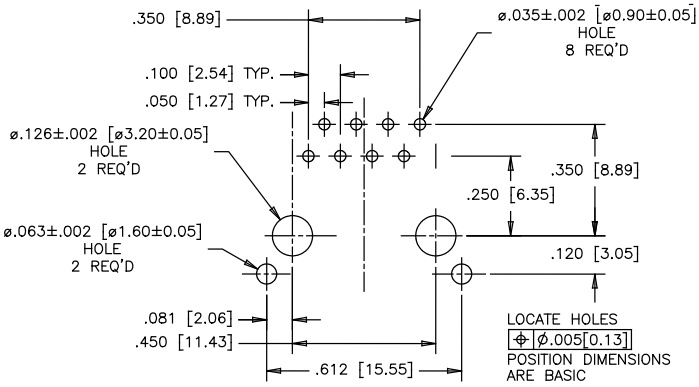

RECOMMENDED PCB LAYOUT

Amphenol Commercial Products - Amphenol Canada Corp. | Telephone: (416) 291-4401 | Fax: (416) 754-8668 | Email: sales@amphenolcanada.com
All specifications are subject to change without notice. Catalogue is updated regularly. Please refer to www.amphenolcanada.com for the most recent edition.

RJE09

TAB DOWN, STANDARD PROFILE

TAB DOWN, STANDARD PROFILE

RJE09 series is a group of products within a family of standard modular jacks designed to meet requirements for a variety of applications. Options with the RJE09 family include shielded & non-shielded, and RJ11 & RJ45.

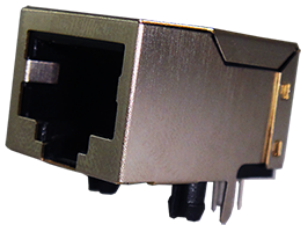

SPECIFICATIONS

Material

Insulator:	High temp. thermoplastic; Complies with UL 94V-0; Black
Contacts:	Phosphor bronze hard temper with gold thickness options (6µ", 15µ", 30µ", 50µ") over 50µ" min. nickel on contact mating area; 100µ" min. matte tin or gold flash plating on soldering tail
Shield:	Copper alloy; nickel plated allover

Electrical

Contact Resistance:	20 mΩ max.
Insulation resistance:	500 MΩ min. at 500V DC for 2 mins max.
Current Rating:	1.5 Amps per contact
Voltage Rating:	125 Volts AC
DWV:	1000 VAC, 60 Hz. 1 min.

Mechanical

Insertion Force:	5 lbs max.
Pull Retention Force:	20 lbs min.
Durability:	750 mating & unmating cycles
Recommended Soldering Temperature:	Wave soldering peaked at 260°C for 5 to 8 secs max.
Operating Temperature:	- 40°C to + 70°C
UL File #:	E136228

ORDERING INFORMATION

RJE09 - X X X - X X X 0

Number of Ports
- 1 -1 Port
- 2 - 2 Ports
- 4 - 4 Ports
- 6 - 6 Ports
- 8 - 8 Ports

Number of Positions
- 6 - 6 Positions
- 8 - 8 Positions
- A - 10 Positions

Number of Contacts
- 4 - 4 Contacts
- 6 - 6 Contacts
- 8 - 8 Contacts
- A - 10 Contacts

Modifier
- 0 - Standard product

Panel Stop Options
- 1 - No panel stop
- 2 - With panel stop

Contact Plating
- 1 - 6µ" gold plating
- 2 - 15µ" gold plating
- 3 - 30µ" gold plating
- 4 - 50µ" gold plating

Shield Options
- 0 - No shield
- 1 - Shield with rear PCB tabs, no top or side tabs
- 5 - Shield with top, side, and front PCB tabs
- 8 - Shield with front PCB tabs, no top or side tabs

Didn't find what you were looking for?
Please contact sales@amphenolcanada.com and let us know what you need.

Click to Return to Table of Contents

RJE09

TAB DOWN, STANDARD PROFILE

Single Port

Non-Shielded

RJE09-1AA-0X10

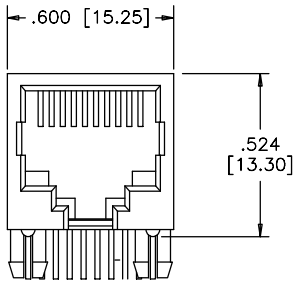

FRONT VIEW

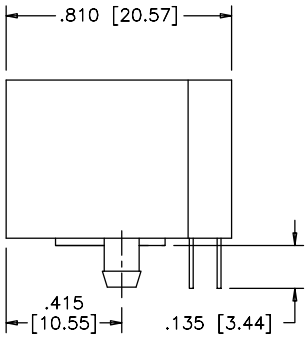

SIDE VIEW

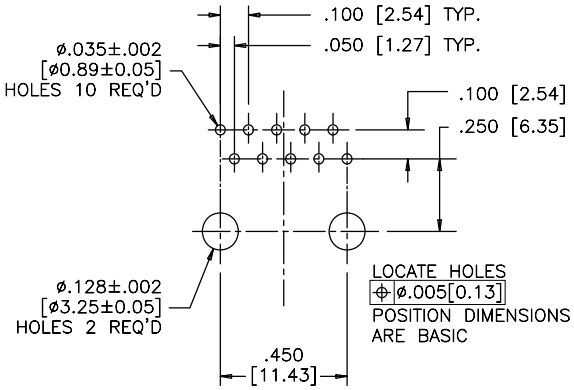

RECOMMENDED PCB LAYOUT

Shielded

RJE09-188-1X10

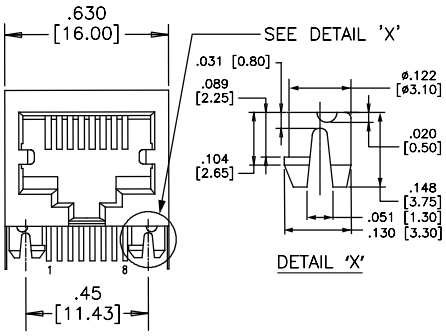

FRONT VIEW

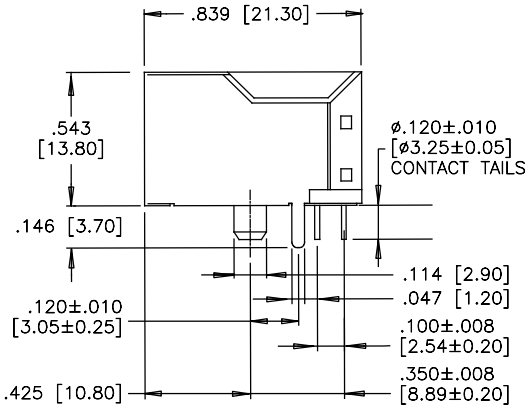

SIDE VIEW

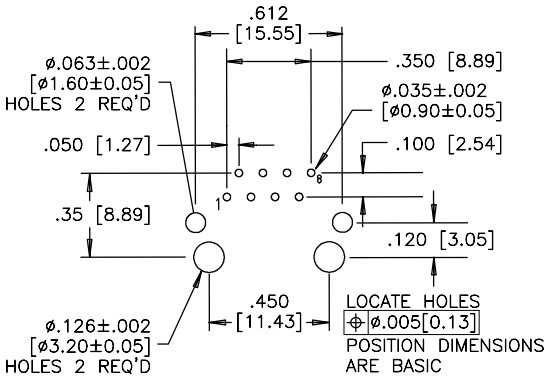

RECOMMENDED PCB LAYOUT

Shielded

RJE09-188-5X10

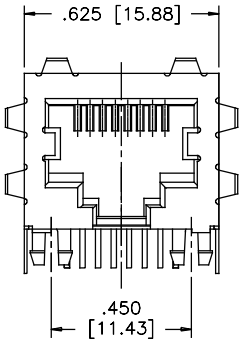

FRONT VIEW

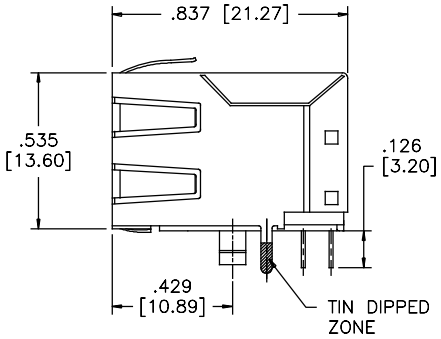

SIDE VIEW

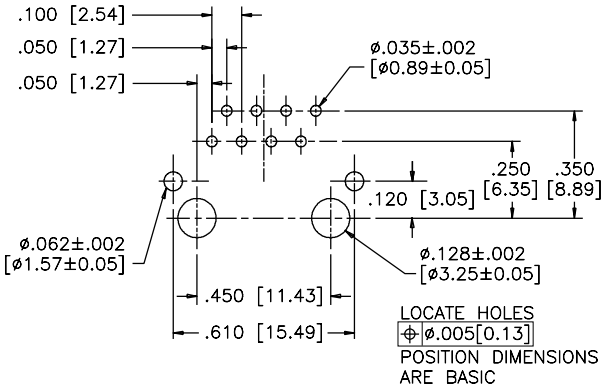

RECOMMENDED PCB LAYOUT

Amphenol Commercial Products - Amphenol Canada Corp. | Telephone: (416) 291-4401 | Fax: (416) 754-8668 | Email: sales@amphenolcanada.com
All specifications are subject to change without notice. Catalogue is updated regularly. Please refer to www.amphenolcanada.com for the most recent edition.

RJE09

TAB DOWN, STANDARD PROFILE

Multi Port

Non-Shielded

RJE09-288-0X10

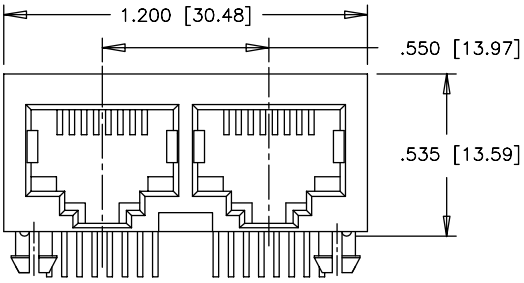

FRONT VIEW

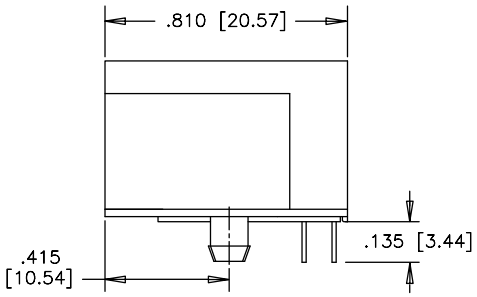

SIDE VIEW

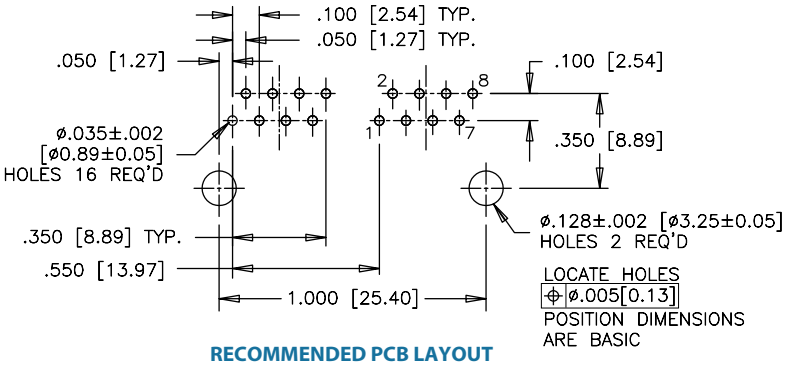

RECOMMENDED PCB LAYOUT

Shielded

RJE09-888-1X10

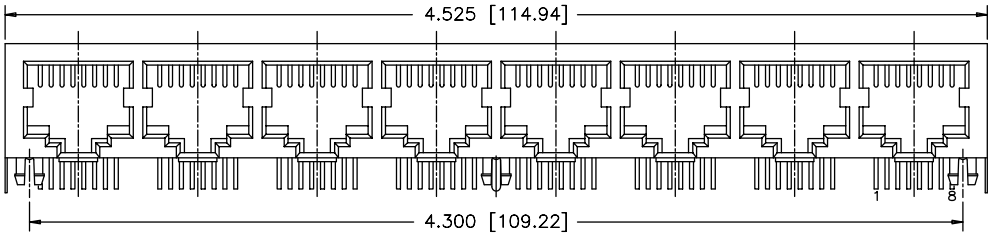

FRONT VIEW

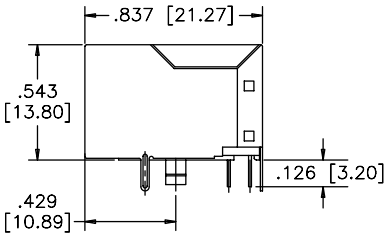

SIDE VIEW

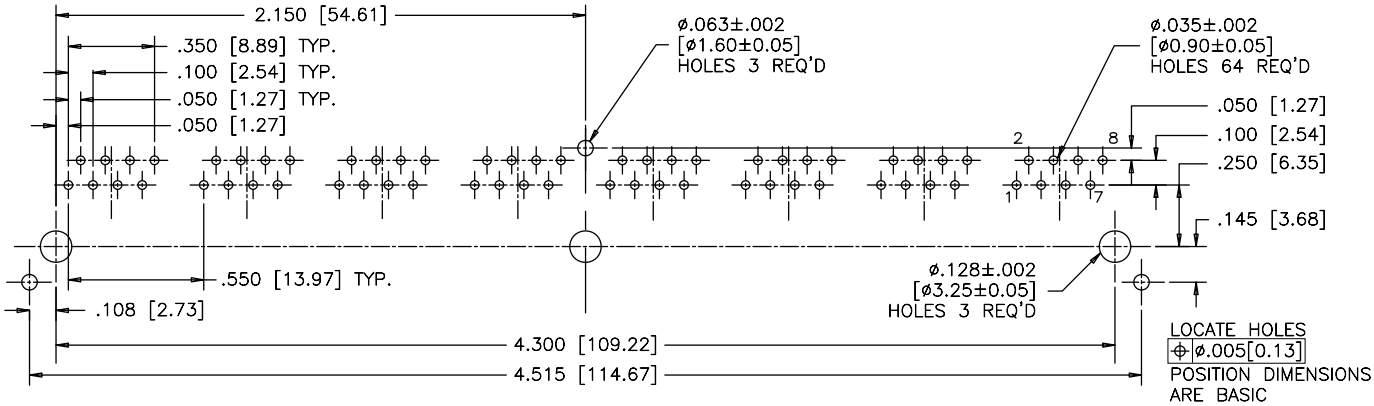

RECOMMENDED PCB LAYOUT

RJULE

TAB DOWN, RECESSED, LOW PROFILE

TAB DOWN, RECESSED, LOW PROFILE

RJULE is a series of single port RJ45 modular jacks designed for slim profile applications. With a profile height of less than 10 millimeters, this connector is perfect where vertical space is limited. Standard and rear mount shield options for superior EMI performance makes this part ideal for LAN and router applications.

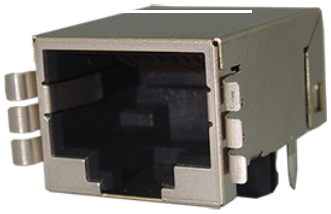

SPECIFICATIONS

Material

Housing:	High temp. thermoplastic; Flammability rating UL94-0; RoSH compliant
Contacts:	Phosphor bronze
Plating:	Gold plated on mating surfaces over 50µ" (1.27 microns) min. nickel under plate; 100µ" (2.54 microns) min. matte tin on contact tails
Shield:	Copper alloy; nickel plated

Electrical

Contact Resistance:	20 mΩ max.
Insulation resistance:	500 MΩ min. at 500V DC for 2 mins max.
Current Rating:	1.5 Amps per contact
Voltage Rating:	125 Volts AC
DWV:	1000 VAC, 60 Hz. 1 min.

Mechanical

Insertion Force:	5 lbs max.
Pull Retention Force:	20 lbs min.
Durability:	750 mating & unmating cycles
Recommended Soldering Temperature:	Wave soldering peaked at 260°C for 5 secs max.
Operating Temperature:	-55°C to + 85°C
UL File #:	E135615

Note: Suitable for IR Reflow

ORDERING INFORMATION

RJULE - 4 X X X X - 01 X

Number of Positions
- 4 - 8 Positions

Contact Plating
- 0 - 1~3µ" gold plating
- 1 - 15µ" gold plating
- 2 - 30µ" gold plating
- 3 - 50µ" gold plating

Housing Options
- 1 - Black
- 2 - Yellow
- 3 - Red

Number of Contacts
- 4 - 4 Contacts
- 6 - 6 Contacts
- 8 - 8 Contacts

Packaging
- Blank - Tray
- T - Tape & Reel

Number of Ports
- 01- 1 Port

Shield Options
- 0 - No shield
- 1 - Shield with top, side, and rear PCB tabs
- 2 - Shield with flared side tabs
- 3 - Shield with rear PCB, no top or side tabs

Didn't find what you were looking for?
Please contact sales@amphenolcanada.com and let us know what you need.

Click to Return to Table of Contents

RJULE

TAB DOWN, RECESSED, LOW PROFILE

Single Port

Non-Shielded

RJULE-4X180-01

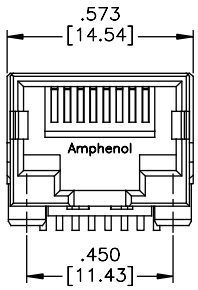

FRONT VIEW

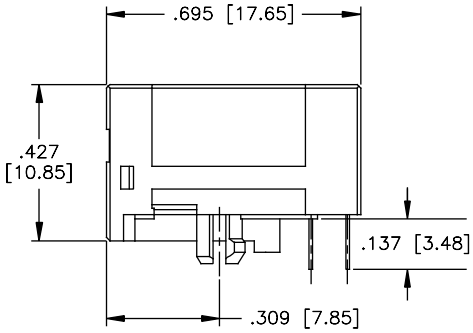

SIDE VIEW

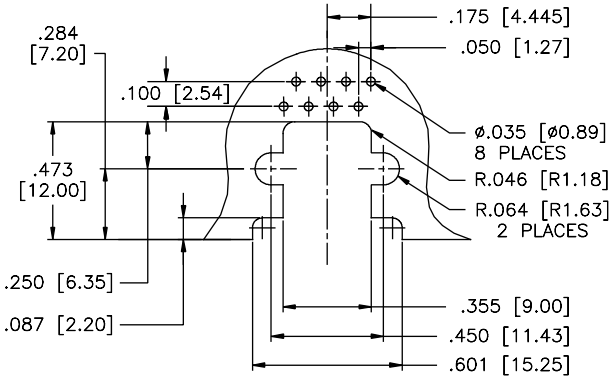

RECOMMENDED PCB LAYOUT

Shielded with Side Ground Tabs

RJULE-4X182-01

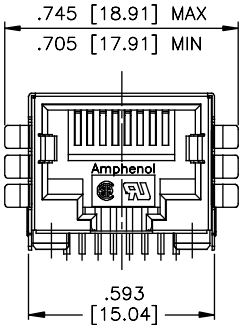

FRONT VIEW

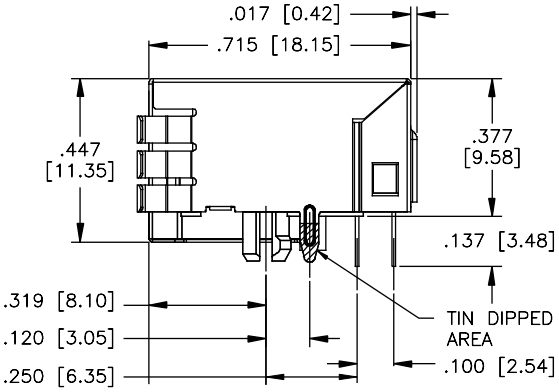

SIDE VIEW

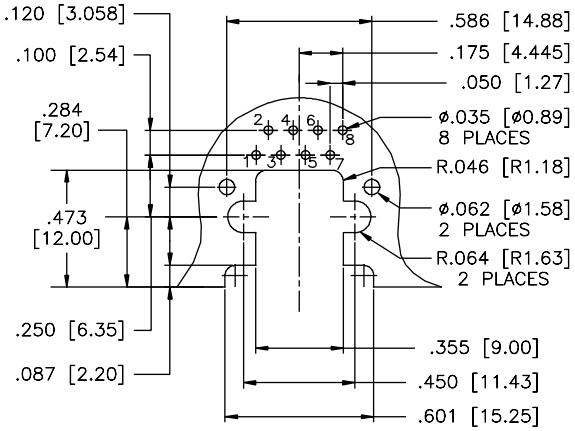

RECOMMENDED PCB LAYOUT

Standard Shield

RJULE-4X181-01

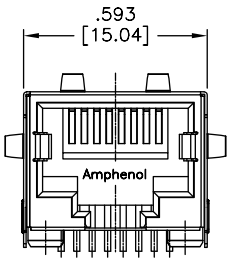

FRONT VIEW

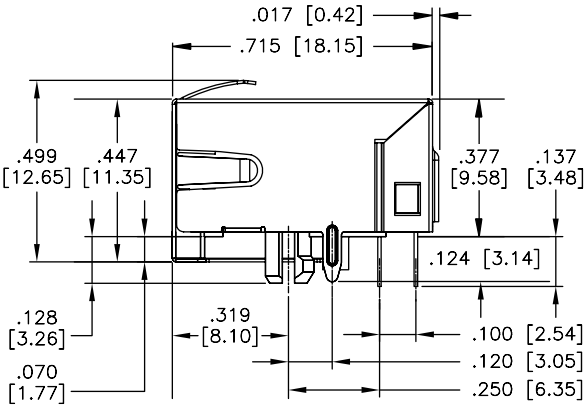

SIDE VIEW

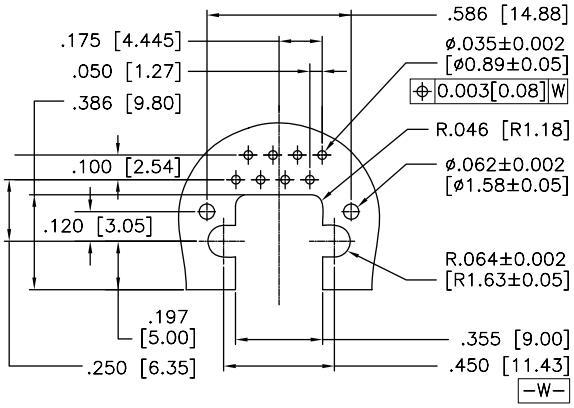

RECOMMENDED PCB LAYOUT

RJE73

TAB DOWN, SINGLE PORT, LOW PROFILE, WITH LEDs

TAB DOWN, SINGLE PORT, LOW PROFILE

The RJE73 modular jack is a low profile RJ45 with LEDs and superior EMI shielding with a small footprint for space sensitive designs. This connector features built-in LEDs that provide link activity and network verification. This product is ideal for LAN applications such as adapter cards and routers.

SPECIFICATIONS

Material

Insulator:	High temp. thermoplastic; Complies with UL94-0; Black
Contacts:	Phosphor bronze hard temper with gold plating options over 50µ" min. nickel on contact mating area; 100µ" min. matte tin plating on solder tails
Shield:	Stainless steel with tin dipped tails
LED:	Tin plating on LED tails

Mechanical

Insertion Force:	5 lbs max.
Pull Retention Force:	20 lbs min.
Durability:	750 mating & unmating cycles
Recommended Soldering Temperature:	Wave soldering peaked at 245°C for 8 to 10 secs max.
Operating Temperature:	-55°C to + 85°C
UL File #:	E135615

Electrical

Contact Resistance:	20 mΩ max.
Insulation resistance:	500 MΩ min. at 500V DC for 2 mins max.
Current Rating:	1.0 Amps per contact
Voltage Rating:	125 Volts AC
DWV:	1000 VAC, 60 Hz. 1 min.
LED Forward DC Current:	20mA typical
LED Forward Voltage:	1.9 Volts max. at 2mA (for single colours) 2.6 Volts max. at 2mA (for bicolours)
LED Reverse Voltage:	5 Volts min.
LED Light Intensity:	0.4 to 1.5 mcd min. at 2mA (for single colours) 0.5 mcd min. at 2mA (for bicolours)
LED Wave Length:	Yellow: 587 ± 7 nm measured at 20mA Green: 565 ± 6 nm measured at 20mA Red: 625 ± 5 nm measured at 20mA

ORDERING INFORMATION

RJE73 - 1 8 8 - 0 0 X X X

Number of Ports
1- 1 Port

Number of Positions
8 - 8 Positions

Number of Contacts
8 - 8 Contacts

Shield Options
0 - Shield without tabs
1 - Shield with side and top tabs
N - No Shield

LED Options
Click to view page 3 for options

Contact Plating
1 - 6µ" gold plating
2 - 15µ" gold plating
3 - 30µ" gold plating
4 - 50µ" gold plating

Didn't find what you were looking for?
Please contact sales@amphenolcanada.com and let us know what you need.

Click to Return to Table of Contents

RJE73

TAB DOWN, SINGLE PORT, LOW PROFILE, WITH LEDs

Single Port

RJE73-188-00XX0

Shielded - No Top or Side Tabs

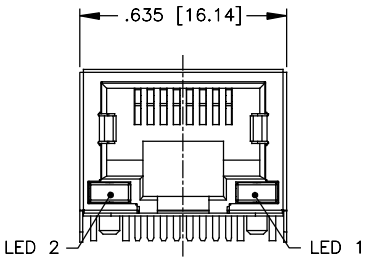

FRONT VIEW

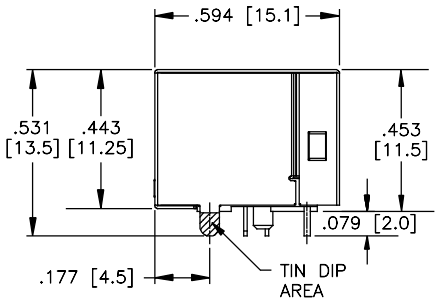

SIDE VIEW

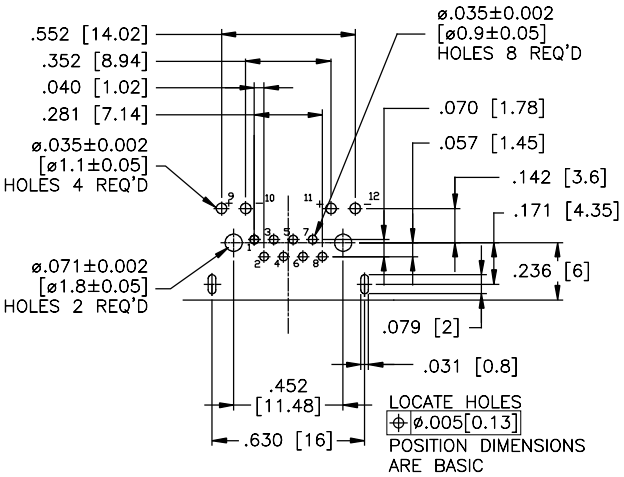

RECOMMENDED PCB LAYOUT

Shielded - With Top and Side Tabs

RJE73-188-00XX1

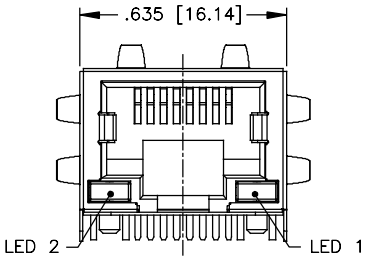

FRONT VIEW

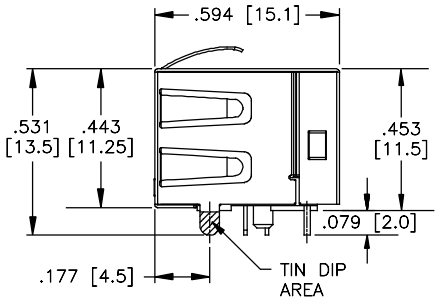

SIDE VIEW

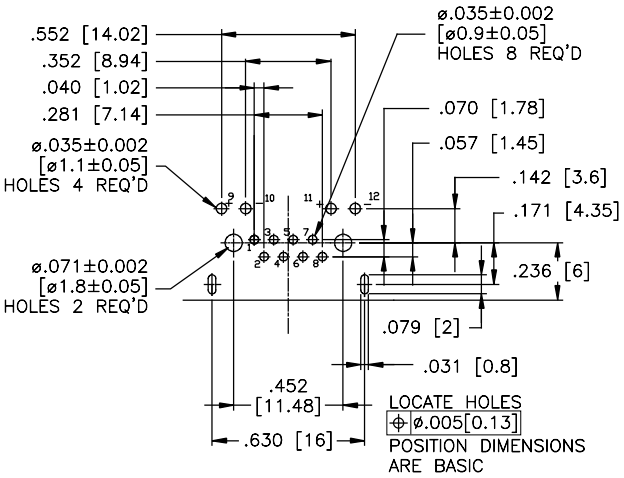

RECOMMENDED PCB LAYOUT

RJSSE

TAB UP, WITH LIGHT PIPES

TAB UP, WITH LIGHT PIPES

The RJSSE series represents an expansion of Amphenol Canada's current RJHSE series connector. The RJSSE offers all the benefits of the RJHSE series in SMT with light pipes. Shielded and non-shielded versions are available with or without light pipes.

SPECIFICATIONS

Material

Insulator:	High temp. thermoplastic; Complies with UL94-0; Black
Contacts:	Phosphor bronze hard temper with gold plating options over 50µ" min. nickel on contact mating area; 100µ" min. matte tin plating on solder tails
Shield:	Copper alloy; nickel or matte tin plating
Light Pipe:	Optical polycarbonate; UL 94V-0

Electrical

Contact Resistance:	20 mΩ max.
Insulation resistance:	500 MΩ min. at 500V DC for 2 mins max.
Current Rating:	1.5 Amps per contact
Voltage Rating:	125 Volts AC
DWV:	1500 VAC, 60 Hz. 1 min.

Mechanical

Insertion Force:	5 lbs max.
Pull Retention Force:	20 lbs min.
Durability:	750 mating & unmating cycles
Recommended Soldering Temperature:	IR Reflow peaked at 260°C for 5 to 10 secs max.
Operating Temperature:	-55°C to + 85°C
UL File #:	E135615

Note: Light Pipes to be installed after soldering

ORDERING INFORMATION

RJSSE - X X X X - XX - X

Version
- 5 - 8 Positions, 20µ" gold plating
- 7 - 6 Positions, 20µ" gold plating

Shield Options
- 0 - No shield with hold-down bracket
- 3 - Shield with top tabs
- 5 - Shield with flattened bottom tab
- F - Shield without tabs and boardlock
- N - No shield, no hold-down bracket
- S - Shield with straight PCB

Number of Contacts
- 4 - 4 Contacts
- 6 - 6 Contacts
- 8 - 8 Contacts

Packaging
- Blank - Tray
- T - Tape & Reel

Number of Ports
- Blank - 1 Port
- 02 - 2 Ports
- 04 - 4 Ports

Light Pipe Options
- 0 - Blocked
- 1 - With light pipe
- 2 - Without light pipe, not blocked

Note: The light pipes are available to be purchased on their own.
Part Number: RJSSE-2485-01

Didn't find what you were looking for?
Please contact sales@amphenolcanada.com and let us know what you need.

Click to Return to Table of Contents

RJSSE

TAB UP, WITH LIGHT PIPES

Single Port

Non-Shielded

RJSSE-5080

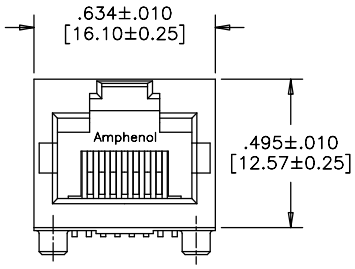

FRONT VIEW

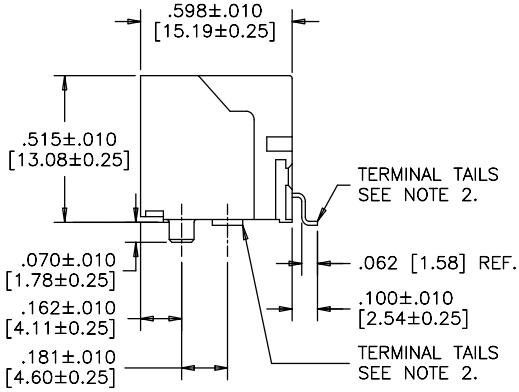

SIDE VIEW

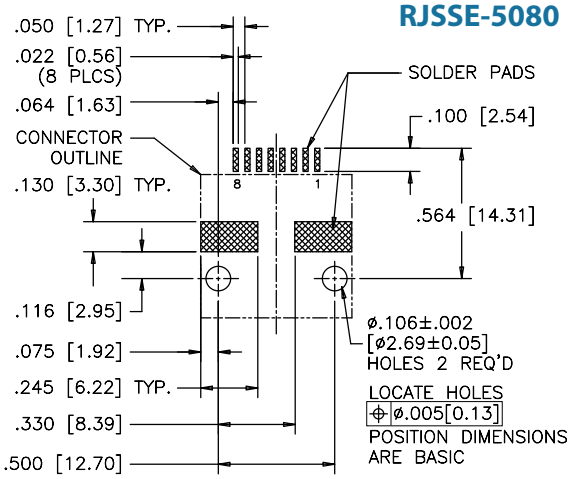

RECOMMENDED PCB LAYOUT

Standard Shield - With Top & Side Ground Tabs

RJSSE-5381

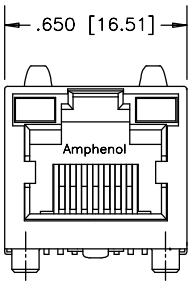

FRONT VIEW

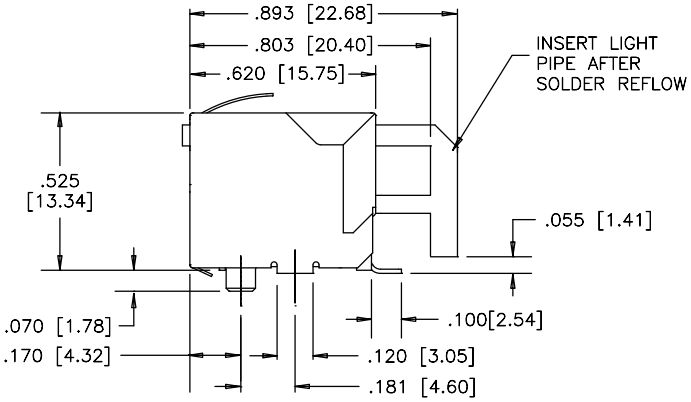

SIDE VIEW

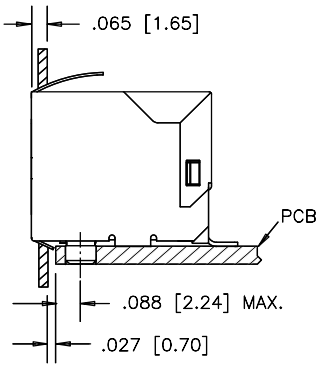

FOR REFERENCE

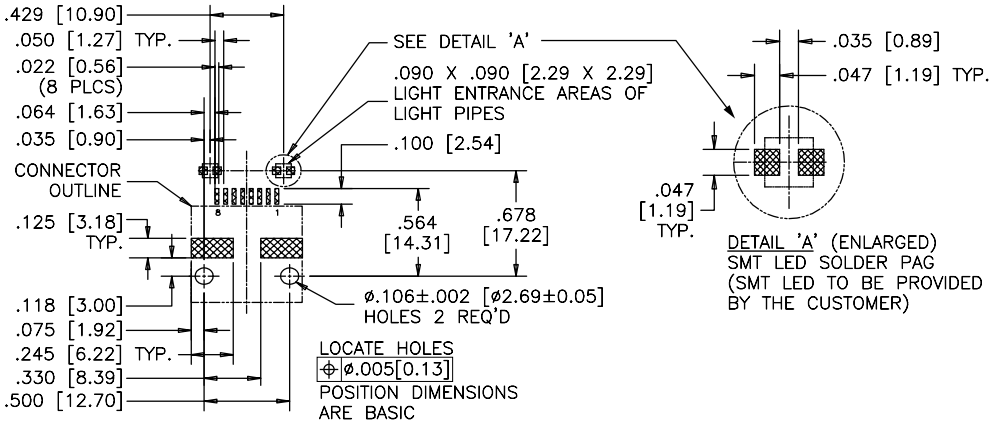

RECOMMENDED PCB LAYOUT

RJSSE

TAB UP, WITH LIGHT PIPES

Multi Port

Non-Shielded

RJSSE-5081-02

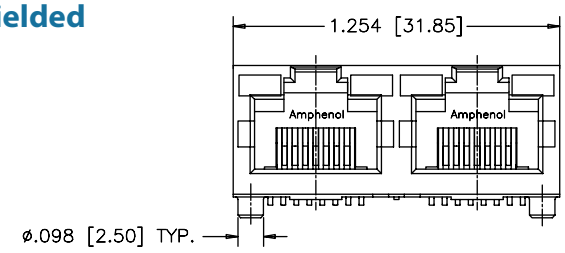

FRONT VIEW

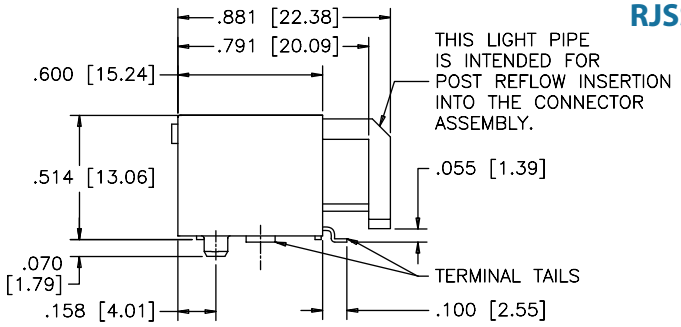

SIDE VIEW

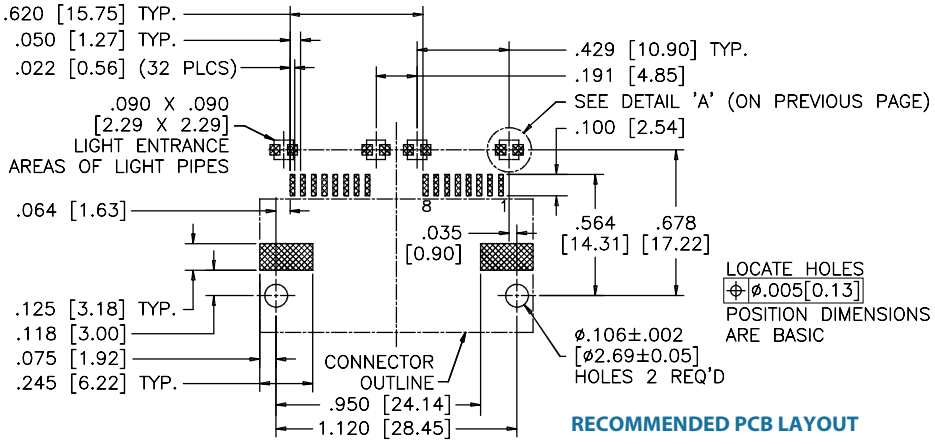

RECOMMENDED PCB LAYOUT

Multi Port

Shielded

RJSSE-5381-02

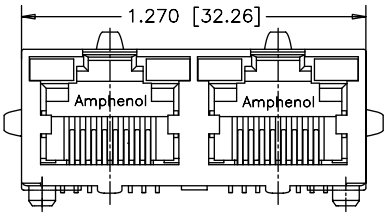

FRONT VIEW

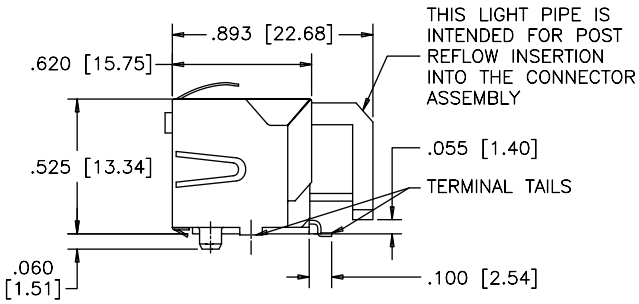

SIDE VIEW

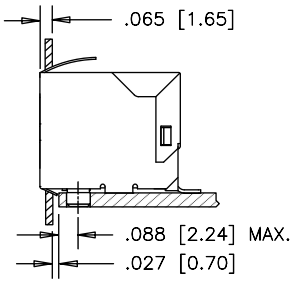

FOR REFERENCE

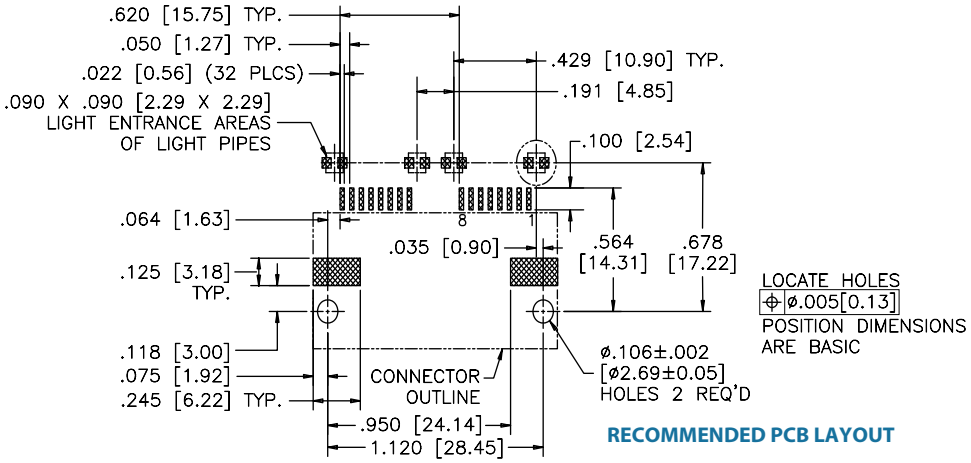

RECOMMENDED PCB LAYOUT

Amphenol Commercial Products - Amphenol Canada Corp. | Telephone: (416) 291-4401 | Fax: (416) 754-8668 | Email: sales@amphenolcanada.com
All specifications are subject to change without notice. Catalogue is updated regularly. Please refer to www.amphenolcanada.com for the most recent edition.

RJCSE

TAB UP, STANDARD PROFILE, WITH LEDs

TAB UP, STANDARD PROFILE, WITH LEDs

The RJCSE is a right angle surface mount connector. Shielding is available for increased EMI performance as well as built-in LEDs for link activity and network verification. This product is ideal for LAN applications such as adapter cards and routers.

SPECIFICATIONS

Material

Insulator:	High temp. thermoplastic; Complies with UL 94V-0; Black
Contacts:	Phosphor bronze hard temper with gold thickness options (6µ", 15µ", 30µ", 50µ") over 50µ" min. nickel on contact mating area; 100µ" min. matte tin plating on soldering tail
Shield:	Stainless steel with matte-tin plating

Mechanical

Insertion Force:	5 lbs max.
Pull Retention Force:	20 lbs min.
Durability:	750 mating & unmating cycles
Recommended Soldering Temperature:	Suitable for IR Reflow at 260°C for 10 secs max.
Operating Temperature:	- 55°C to + 85°C
UL File #:	E135615
CSA File #:	LR685398

Electrical

Contact Resistance:	20 mΩ max.
Insulation resistance:	500 MΩ min. at 500V DC for 2 mins max.
Current Rating:	1.5 Amps per contact
Voltage Rating:	125 Volts AC
DWV:	1000 VAC, 60 Hz. 1 min.
LED Forward DC Current:	20mA typical
LED Forward Voltage:	1.9 Volts max. at 2mA (for single colours) 2.6 Volts max. at 2mA (for bicolours)
LED Reverse Voltage:	5 Volts min.
LED Light Intensity:	0.4 to 1.5 mcd min. at 2mA (for single colours) 0.5 mcd min. at 2mA (for bicolours)
LED Wave Length:	Yellow: 587 ± 7 nm measured at 20mA Green: 565 ± 6 nm measured at 20mA Red: 625 ± 5 nm measured at 20mA

ORDERING INFORMATION

RJCSE - X X X X - 01

Version
- 3 - 8 Positions, 15µ" gold plating
- 4 - 8 Positions, 30µ" gold plating
- 5 - 8 Positions, 50µ" gold plating

Shield Options
- 0 - No shield
- 3 - Standard shield with top and side tabs
- 4 - Standard shield with no tabs

Number of Ports
- 01 - 1 Port

LED Options
- Click to view page 3 for options

Number of Contacts
- 2 - 2 Contacts
- 4 - 4 Contacts
- 6 - 6 Contacts
- 8 - 8 Contacts

Didn't find what you were looking for?
Please contact sales@amphenolcanada.com and let us know what you need.

Click to Return to Table of Contents

RJCSE

TAB UP, STANDARD PROFILE, WITH LEDs

Single Port

Non-Shielded

RJCSE-508X-01

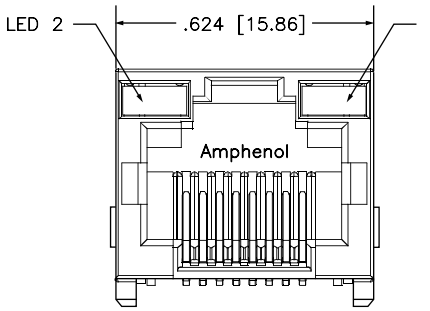

FRONT VIEW

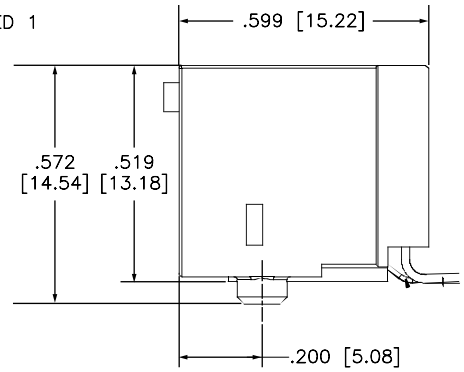

SIDE VIEW

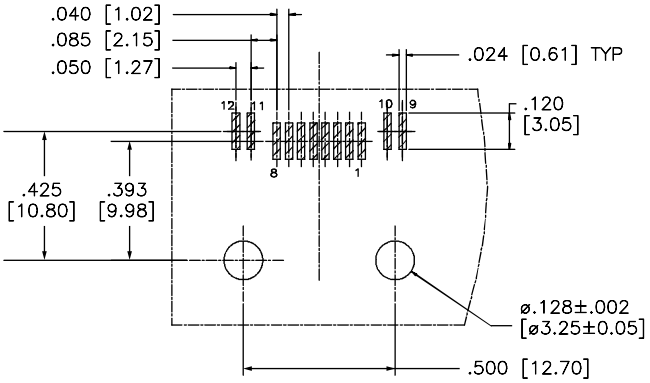

RECOMMENDED PCB LAYOUT

Shielded

RJCSE-538X-01

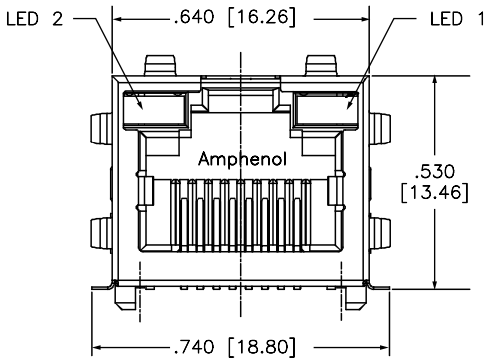

FRONT VIEW

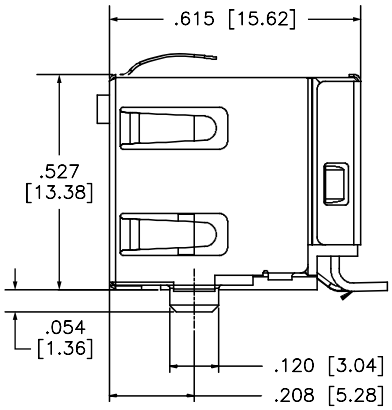

SIDE VIEW

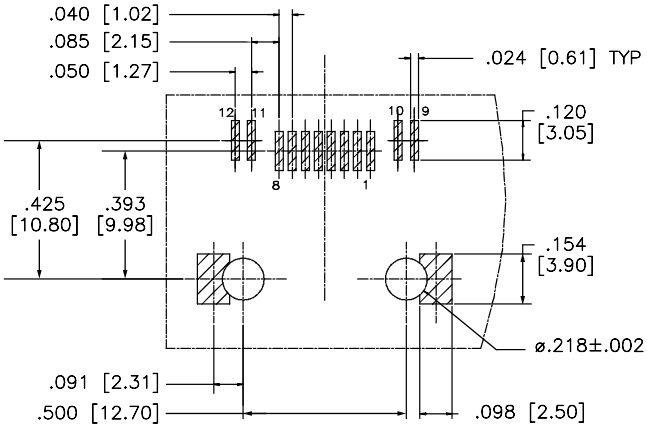

RECOMMENDED PCB LAYOUT

Amphenol Commercial Products - Amphenol Canada Corp. | Telephone: (416) 291-4401 | Fax: (416) 754-8668 | Email: sales@amphenolcanada.com
All specifications are subject to change without notice. Catalogue is updated regularly. Please refer to www.amphenolcanada.com for the most recent edition.

RJLSE

TAB DOWN, ULTRA LOW PROFILE

TAB DOWN, ULTRA LOW PROFILE

The RJLSE series contains surface mount modular jacks with superior EMI performance that supports Ethernet Protocols. This low profile connector is built to meet your high volume RJ requirements. This series is a true pick and place compatible SMT connector and is available with different shielding, contacts, gold plating thickness, and color options. This connector is built with high temperature engineering thermoplastic and suitable for the IR Reflow solder process.

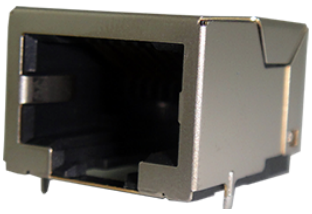

SPECIFICATIONS

Material

Insulator:	High temp. thermoplastic; Complies with UL 94V-0; Black
Contacts:	Phosphor bronze hard temper with gold thickness options (6µ", 15µ", 30µ", 50µ") over 50µ" min. nickel on contact mating area; Gold flash over palladium nickel also available; 100µ" min. matte tin plating on soldering tail
Shield:	Copper alloy; nickel or matte tin plated

Note: Other insulator colour options available

Electrical

Contact Resistance:	20 mΩ max.
Insulation resistance:	500 MΩ min. at 500V DC for 2 mins max.
Current Rating:	1.5 Amps per contact
Voltage Rating:	125 Volts AC
DWV:	1000 VAC, 60 Hz. 1 min.

Mechanical

Insertion Force:	5 lbs max.
Pull Retention Force:	20 lbs min.
Durability:	750 mating & unmating cycles
Recommended Soldering Temperature:	Lead free reflow soldering up to 260°C for 10 secs max. 3 reflow passes max.
Operating Temperature:	- 55°C to + 85°C
UL File #:	E135615
CSA File #:	LR685398

Recommended reflow profile below

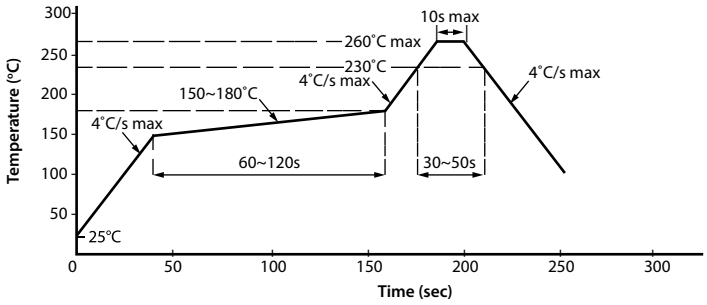

ORDERING INFORMATION

RJLSE - X X X X X - 01 - X

Version
- 4 - 8 Positions
- 6 - 6 Positions

Contact Plating
- 0 - 1~3µ" gold plating
- 1 - 15µ" gold plating
- 2 - 30µ" gold plating
- 3 - 50µ" gold plating

Shield Options
- 0 - No shield with hold-down bracket
- 1 - Standard shield, SMT without PCB tabs
- 3 - Shield with PCB tabs

Packaging
- Blanks - Tray
- T - Tape & Reel

Number of Ports
- 01 - 1 Port

Housing Options
- 1 - Black
- 2 - Yellow
- 3 - Red

Number of Contacts
- 2 - 2 Contacts
- 4 - 4 Contacts
- 6 - 6 Contacts
- 8 - 8 Contacts

Didn't find what you were looking for?
Please contact sales@amphenolcanada.com and let us know what you need.

Click to Return to Table of Contents

RJLSE

TAB DOWN, ULTRA LOW PROFILE

Single Port

Non-Shielded

RJLSE-6X061-01

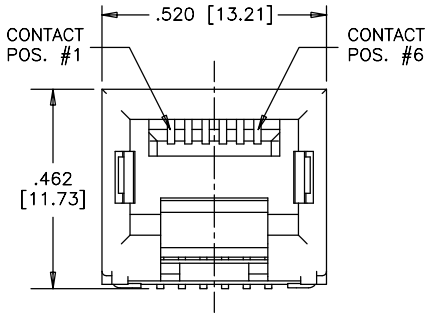

FRONT VIEW

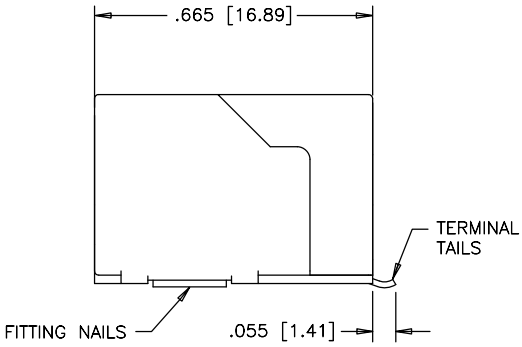

SIDE VIEW

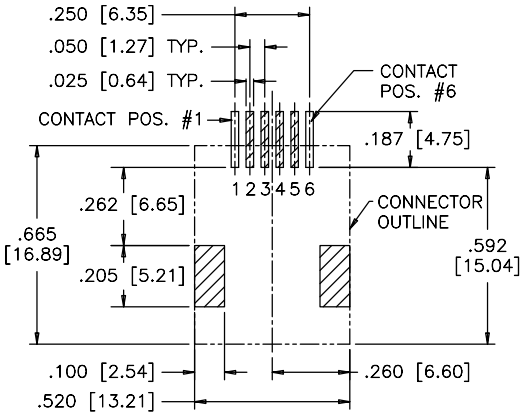

RECOMMENDED PCB LAYOUT

Shielded

RJLSE-4X381-01

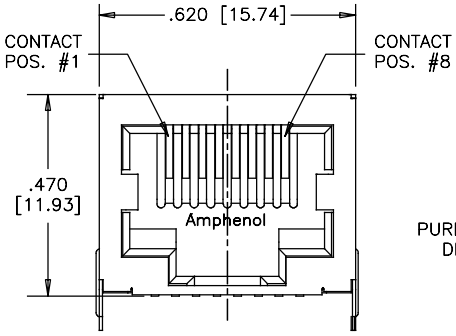

FRONT VIEW

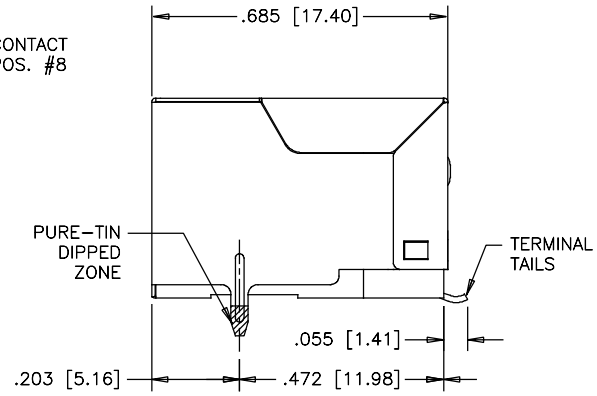

SIDE VIEW

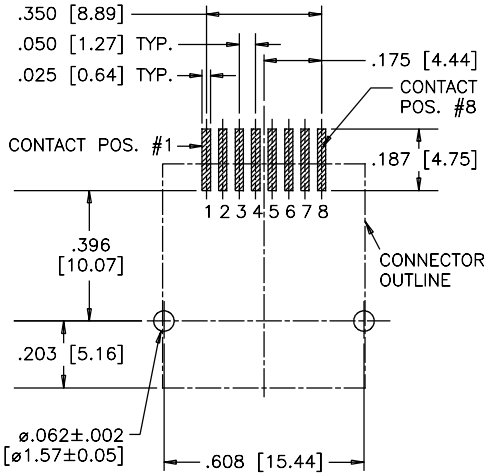

RECOMMENDED PCB LAYOUT

Amphenol Commercial Products - Amphenol Canada Corp. | Telephone: (416) 291-4401 | Fax: (416) 754-8668 | Email: sales@amphenolcanada.com
All specifications are subject to change without notice. Catalogue is updated regularly. Please refer to www.amphenolcanada.com for the most recent edition.

RJE07

TAB DOWN, SINGLE PORT

TAB DOWN, SINGLE PORT

RJE07 products belong to a family of standard modular jacks designed to meet requirements for a variety of applications. Options within the FRJAE series offer low cost and effective EMC control within standard RJ11 & RJ45 connector footprints. EMC control is offered by a completely shielded connector and/or with the use of a high resistivity, high impedance ferrite filter. No board layout changes are required for its use. Simply replace the standard non-filtered connector for superior EMC performance.

SPECIFICATIONS

Material

Insulator:	High temp. thermoplastic; Complies with UL 94V-0; Black
Contacts:	Phosphor bronze hard temper with gold thickness options (6µ", 15µ", 30µ", 50µ") over 50µ" min. nickel on contact mating area; Gold flash over palladium nickel also available; 100µ" min. matte tin plating on soldering tail
Shield:	Copper alloy; nickel or matte tin plated

Mechanical

Insertion Force:	5 lbs max.
Pull Retention Force:	20 lbs min.
Durability:	750 mating & unmating cycles
Recommended Soldering Temperature:	Reflow soldering peaked at 260°C for 6 to 8 secs max
Operating Temperature:	- 40°C to + 85°C
UL File Number:	E136228

Electrical

Contact Resistance:	20 mΩ max.
Insulation resistance:	500 MΩ min. at 500V DC for 2 mins max.
Current Rating:	1.5 Amps per contact
Voltage Rating:	125 Volts AC
DWV:	1000 VAC, 60 Hz. 1 min.

ORDERING INFORMATION

RJE07 - 1 X X - X X X 0

Number of Ports
1 - 1 Port

Number of Positions
6 - 6 Positions
8 - 8 Positions

Number of Contacts
4 - 4 Contacts
6 - 6 Contacts
8 - 8 Contacts

Shield Options
0 - No shield
2 - Through-hole shield
3 - Surface mount shield

Modifier
0 - Standard product

Panel Stop Options
1 - Without panel stop
2 - With panel stop (must have for shield)

Contact Plating
1 - 6µ" gold plating
2 - 15µ" gold plating
3 - 30µ" gold plating
4 - 50µ" gold plating

Didn't find what you were looking for?
Please contact sales@amphenolcanada.com and let us know what you need.

Click to Return to Table of Contents

RJE07

TAB DOWN, SINGLE PORT

Single Port

Non-Shielded

RJE07-188-0X10

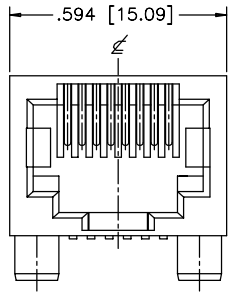

FRONT VIEW

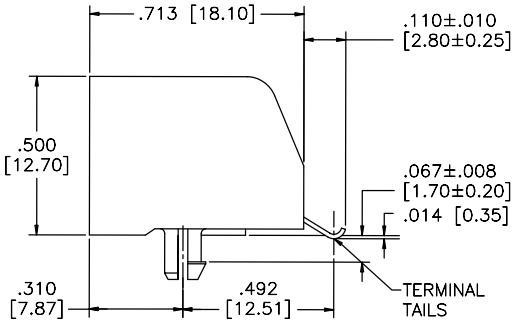

SIDE VIEW

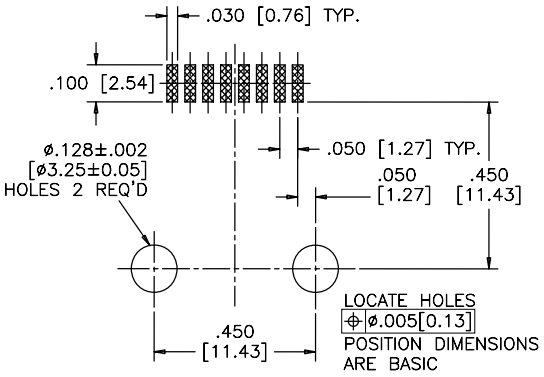

RECOMMENDED PCB LAYOUT

Surface Mount Shield

RJE07-188-3X20

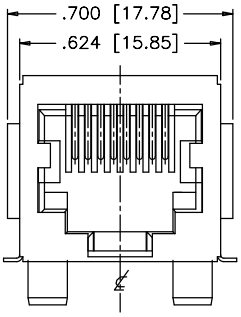

FRONT VIEW

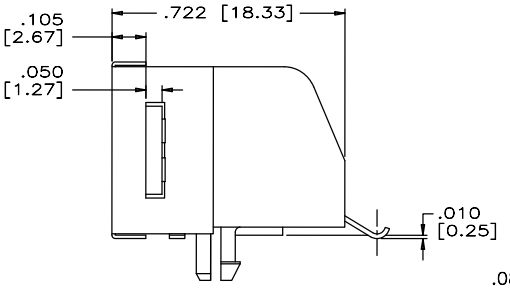

SIDE VIEW

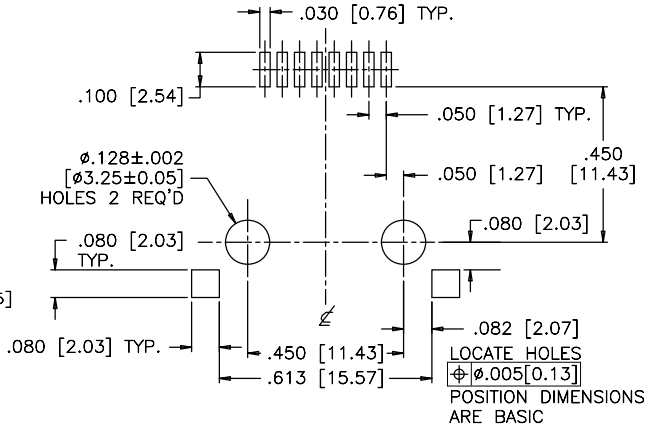

RECOMMENDED PCB LAYOUT

Through-Hole Shield

RJE07-188-2X20

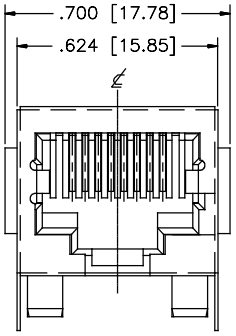

FRONT VIEW

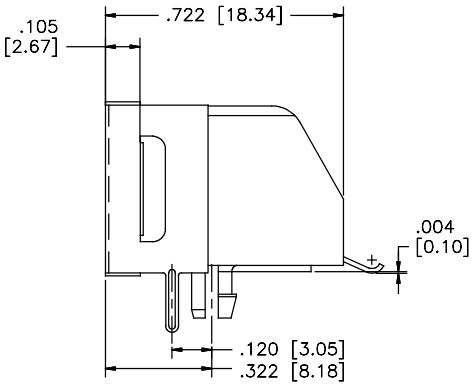

SIDE VIEW

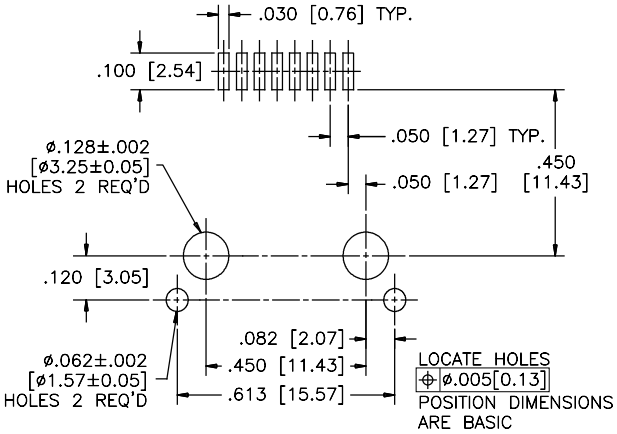

RECOMMENDED PCB LAYOUT

Amphenol Commercial Products - Amphenol Canada Corp. | Telephone: (416) 291-4401 | Fax: (416) 754-8668 | Email: sales@amphenolcanada.com
All specifications are subject to change without notice. Catalogue is updated regularly. Please refer to www.amphenolcanada.com for the most recent edition.

RJE15

TAB DOWN, SINGLE PORT, LOW PROFILE

TAB DOWN, SINGLE PORT, LOW PROFILE

The RJE15 low profile connector is built to meet your high volume RJ requirements. This is a true pick and place compatible SMT connector and is available with or without shielding, as well as with a variety of options including number of contacts, plating thickness, and color. This connector is built with high temperature engineering thermoplastic and suitable for IR Reflow solder process.

SPECIFICATIONS

Material

Insulator:	High temp. thermoplastic; Complies with UL 94V-0; Black
Contacts:	Phosphor bronze hard temper with gold thickness options (6µ", 15µ", 30µ", 50µ") over 50µ" min. nickel on contact mating area; 100µ" min. matte tin plating or gold flash on tail area
Shield:	Copper alloy; nickel plating overall

Mechanical

Insertion Force:	5 lbs max.
Pull Retention Force:	20 lbs min.
Durability:	750 mating & unmating cycles
Recommended Soldering Temperature:	Wave soldering at 260°C for 6 to 8 secs max
Operating Temperature:	- 40°C to + 70°C

Electrical

Contact Resistance:	25 mΩ max.
Insulation resistance:	1000 MΩ min. at 500V DC for 2 mins max.
Current Rating:	1.5 Amps per contact
Voltage Rating:	125 Volts AC
DWV:	1000 VAC, 60 Hz. 1 min.

ORDERING INFORMATION

RJE15 - 1 X X - X X 1 0

Number of Ports
1 - 1 Port

Number of Positions
4 - 4 Positions
6 - 6 Positions
8 - 8 Positions
A - 10 Positions

Number of Contacts
2 - 2 Contacts
4 - 4 Contacts
6 - 6 Contacts
8 - 8 Contacts
A - 10 Contacts

Modifier
0 - Standard product

Panel Stop Options
1 - No panel stop

Contact Plating
1 - 6µ" gold plating
2 - 15µ" gold plating
3 - 30µ" gold plating
4 - 50µ" gold plating

Shield Options
0 - No shield
1 - Standard shield, no tabs
5 - Shield with top and side tabs

Didn't find what you were looking for?
Please contact sales@amphenolcanada.com and let us know what you need.

Click to Return to Table of Contents

RJE15

TAB DOWN, SINGLE PORT, LOW PROFILE

Single Port

Non-Shielded

RJE15-1AA-0X10

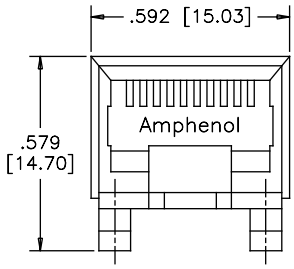

FRONT VIEW

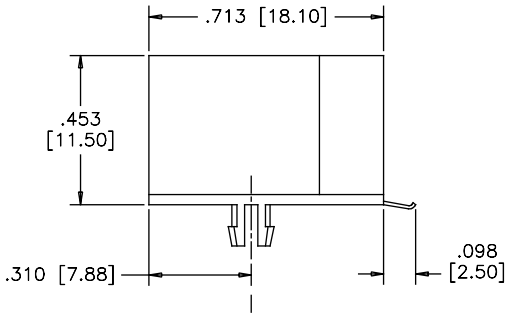

SIDE VIEW

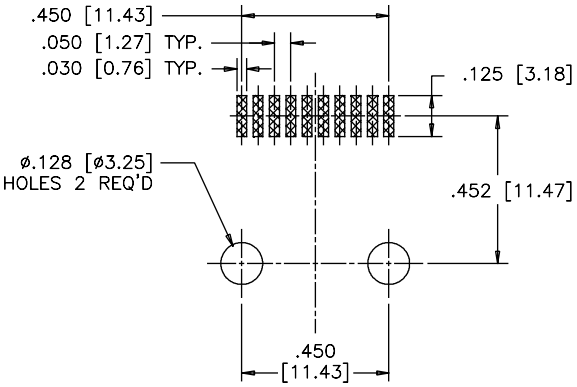

RECOMMENDED PCB LAYOUT

Shielded

RJE15-1AA-1X10

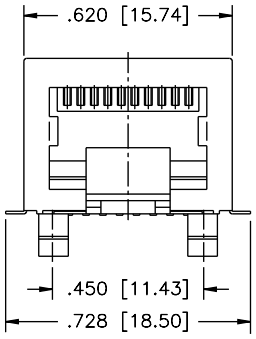

FRONT VIEW

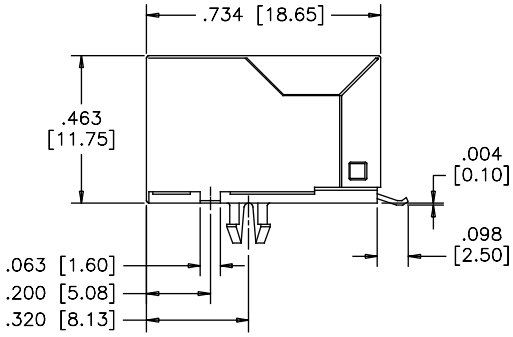

SIDE VIEW

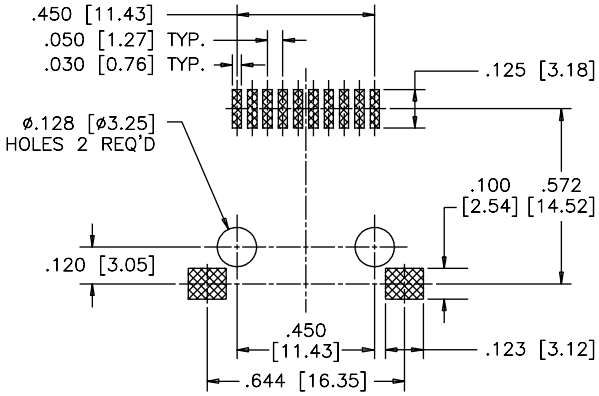

RECOMMENDED PCB LAYOUT

Notes

Amphenol Commercial Products - Amphenol Canada Corp. | **Telephone: (416) 291-4401** | **Fax: (416) 754-8668** | **Email:** sales@amphenolcanada.com
All specifications are subject to change without notice. Catalogue is updated regularly. Please refer to www.amphenolcanada.com for the most recent edition.

RJE56

PRESS FIT, TAB DOWN, RJ45

TAB DOWN, RJ45

The RJE56 series is designed for applications where soldering is not an option. The press fit contacts and shield tabs have the "eye of the needle" design and provide good PCB retention as well as reliable electrical performance.

SPECIFICATIONS

Material

Insulator:	PBT material; complies with UL 940-0; Black
Contacts:	Phosphor bronze hard temper with gold thickness options (6µ", 15µ", 30µ", 50µ") over 50µ" min. nickel on contact mating area; 100µ" min. matte tin plating on press fit tail
Shield:	Stainless steel

Electrical

Contact Resistance:	20 mΩ max.
Insulation resistance:	500 MΩ min. at 500V DC for 2 mins max.
Current Rating:	1.5 Amps per contact
Voltage Rating:	125 Volts AC
DWV:	1000 VAC, 60 Hz. 1 min.

Mechanical

Insertion Force:	5 lbs max.
Pull Retention Force:	20 lbs min.
Durability:	750 mating & unmating cycles
Recommended Soldering Temperature:	Wave soldering peaked at 260°C for 5 to 8 secs max
Operating Temperature:	- 55°C to + 85°C

Note: Suitable for IR Reflow

ORDERING INFORMATION

RJE56 - 1 8 X - X X 1 0 - X

Number of Ports
1 - 1 Port

Number of Positions
8 - 8 Positions

Number of Contacts
6 - 6 Contacts
8 - 8 Contacts

Shield Options
0 - No shield
1 - Full Shield

Packaging
Blank - Tray
T - Tape & Reel

Modifier
0 - Standard product

Panel Stop Options
1 - No panel stop

Contact Plating
1 - 6µ" gold plating
2 - 15µ" gold plating
3 - 30µ" gold plating
4 - 50µ" gold plating

Didn't find what you were looking for?
Please contact sales@amphenolcanada.com and let us know what you need.

Click to Return to Table of Contents

RJE56

PRESS FIT, TAB DOWN, RJ45

Single Port

RJE56-188-1X10

Shielded

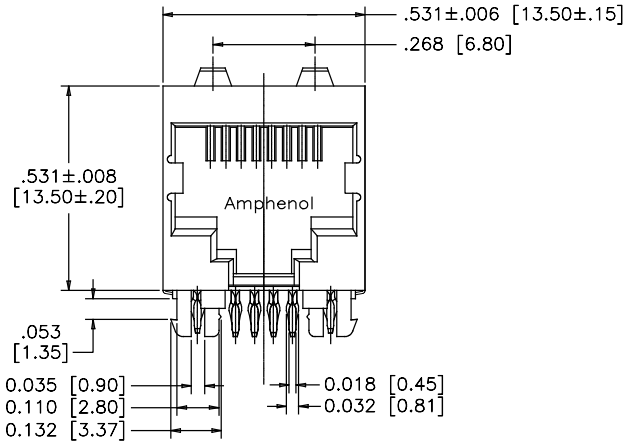

FRONT VIEW

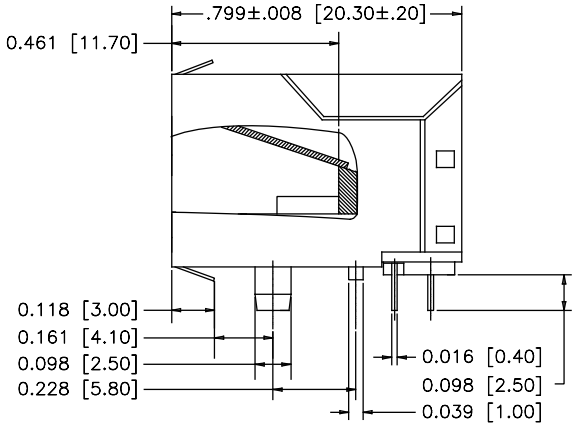

SIDE VIEW

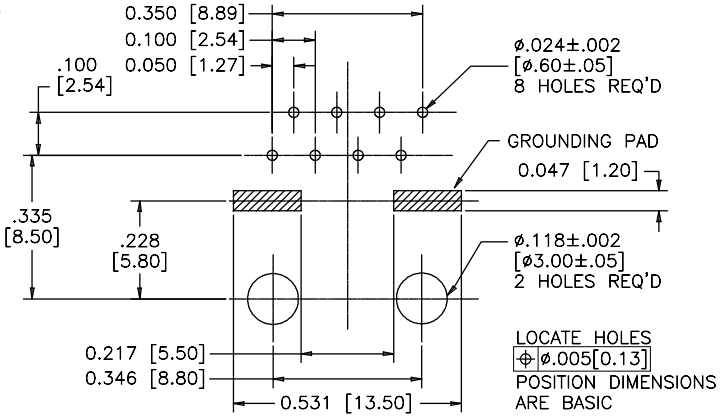

RECOMMENDED PCB LAYOUT

Notes

Amphenol Commercial Products - Amphenol Canada Corp. | **Telephone: (416) 291-4401** | **Fax: (416) 754-8668** | **Email:** sales@amphenolcanada.com
All specifications are subject to change without notice. Catalogue is updated regularly. Please refer to www.amphenolcanada.com for the most recent edition.

RJE06

SINGLE PORT, SLIM PROFILE

SINGLE PORT, SLIM PROFILE

RJE06 series is a group of products within a family of standard modular jacks designed to meet requirements for a variety of applications. Options within the RJE06 family include shielded & non-shielded, and 8P8C configurations.

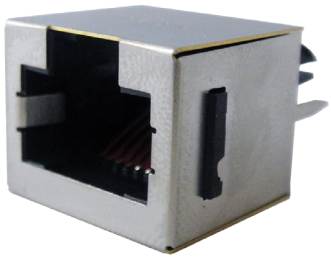

SPECIFICATIONS

Material

Insulator:	Engineering theromplastic; Complies with UL 94V-0; Black
Contacts:	Phosphor bronze hard temper with gold thickness options (6µ", 15µ", 30µ", 50µ") over 50µ" min. nickel on contact mating area; 100µ" min. matte tin or gold flash plating on tail area
Shield:	Copper alloy; nickel plating overall

Electrical

Contact Resistance:	20 mΩ max.
Insulation resistance:	500 MΩ min. at 500V DC for 2 mins max.
Current Rating:	1.5 Amps per contact
Voltage Rating:	125 Volts AC
DWV:	1000 VAC, 60 Hz. 1 min.

Mechanical

Insertion Force:	5 lbs max.
Pull Retention Force:	20 lbs min.
Durability:	750 mating & unmating cycles
Recommended Soldering Temperature:	Wave soldering peaked at 260°C for 5 secs max.
Operating Temperature:	-40°C to + 70°C
UL File #:	E136228

Note: Connectors with high temp. material are suitable for IR Reflow

ORDERING INFORMATION

RJE06 - 1 X X - X X X X

Number of Ports
1 -1 Port

Number of Positions
6 - 6 Positions
8 - 8 Positions

Number of Contacts
6 - 6 Contacts
8 - 8 Contacts

Shield Options
0 - No shield
1 - Standard shield

Modifier
0 - Standard tail length
1 - 4.0mm tail length

Panel Stop Options
1 - Without panel stop
2 - With panel stop

Contact Plating
1 - 6µ" gold plating
2 - 15µ" gold plating
3 - 30µ" gold plating
4 - 50µ" gold plating

Didn't find what you were looking for?
Please contact sales@amphenolcanada.com and let us know what you need.

Click to Return to Table of Contents

RJE06

SINGLE PORT, SLIM PROFILE

Single Port

Non-Shielded

RJE06-188-0X10

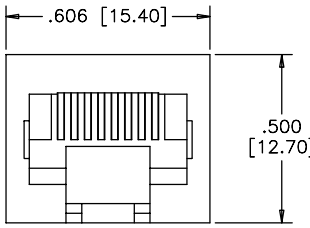

FRONT VIEW

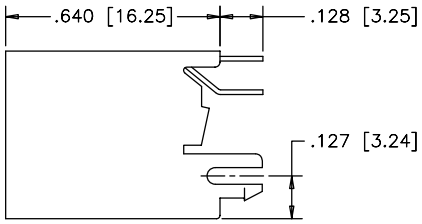

SIDE VIEW

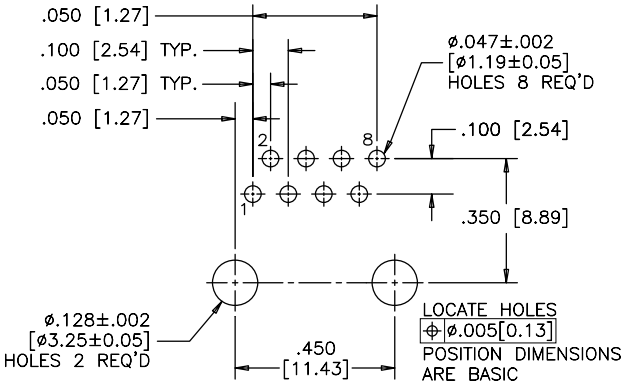

RECOMMENDED PCB LAYOUT

Non-Shielded

RJE06-166-0X10

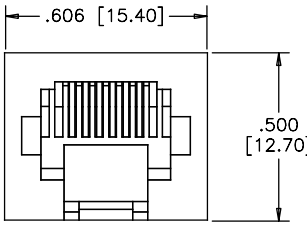

FRONT VIEW

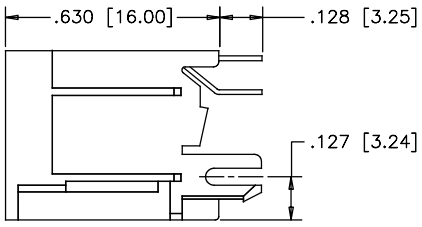

SIDE VIEW

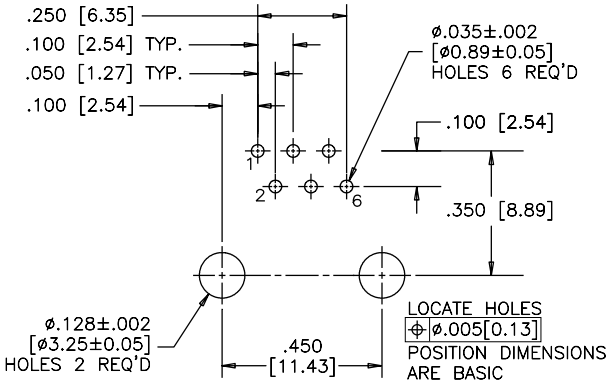

RECOMMENDED PCB LAYOUT

Standard Shield

RJE06-188-1X10

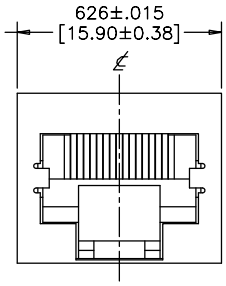

FRONT VIEW

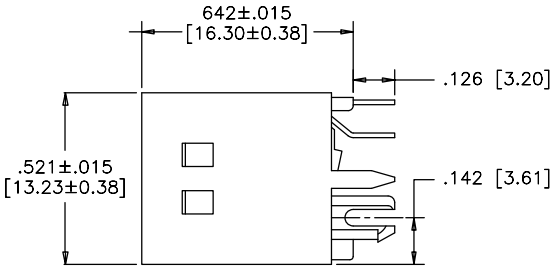

SIDE VIEW

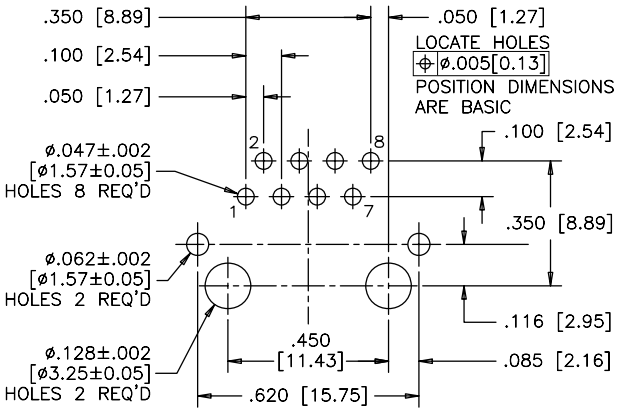

RECOMMENDED PCB LAYOUT

RJE08

SINGLE AND DUAL PORT, STANDARD PROFILE

SINGLE AND DUAL PORT, STANDARD PROFILE

RJE08 series is a group of products within a family of standard modular jacks designed to meet requirements for a variety of applications. Options within the RJE08 include with and without panel stops, and RJ11 & RJ45 configurations.

SPECIFICATIONS

Material

Insulator:	Engineering theromplastic; Complies with UL 94V-0; Black
Contacts:	Phosphor bronze hard temper with gold thickness options (6µ", 15µ", 30µ", 50µ") over 50µ" min. nickel on contact mating area; 100µ" min. matte tin or gold flash plating on tail area

Electrical

Contact Resistance:	20 mΩ max.
Insulation resistance:	500 MΩ min. at 500V DC for 2 mins max.
Current Rating:	1.5 Amps per contact
Voltage Rating:	125 Volts AC
DWV:	1000 VAC, 60 Hz. 1 min.

Mechanical

Insertion Force:	5 lbs max.
Pull Retention Force:	20 lbs min.
Durability:	750 mating & unmating cycles
Recommended Soldering Temperature:	Wave soldering peaked at 260°C for 5 seconds max.
Operating Temperature:	-40°C to + 70°C
UL File #:	E136228

ORDERING INFORMATION

RJE08 - X X X - 0 X X X

Number of Ports
- 1 - 1 Port
- 2 - 2 Port
- 4 - 4 Port

Number of Positions
- 4 - 4 Positions
- 6 - 6 Positions
- 8 - 8 Positions
- A - 10 Positions

Number of Contacts
- 4 - 4 Contacts
- 6 - 6 Contacts
- 8 - 8 Contacts
- A - 10 Contacts

Modifier
- 0 - Standard product
- 9 - Standard for two port

Panel Stop Options
- 1 - Without panel stop
- 2 - With panel stop

Contact Plating
- 1 - 6µ" gold plating
- 2 - 15µ" gold plating
- 3 - 30µ" gold plating
- 4 - 50µ" gold plating

Shield Options
- 0 - No shield

Didn't find what you were looking for?
Please contact sales@amphenolcanada.com and let us know what you need.

Click to Return to Table of Contents

RJE08

SINGLE AND DUAL PORT, STANDARD PROFILE

Single Port

Non-Shielded

RJE08-188-0X10

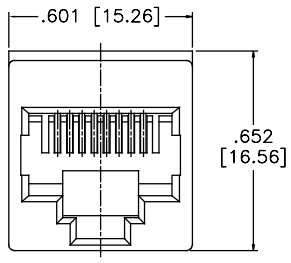

TOP VIEW

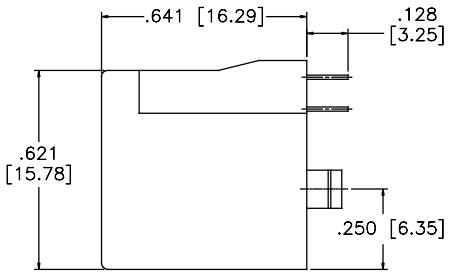

SIDE VIEW

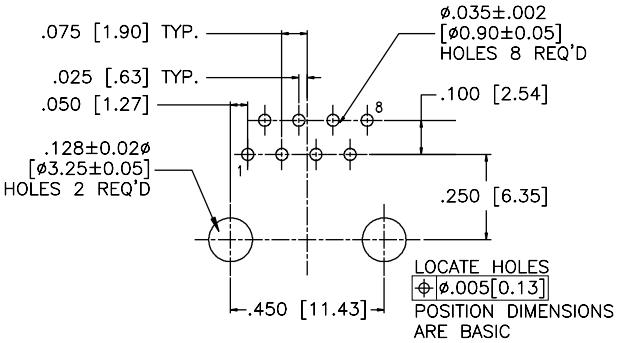

RECOMMENDED PCB LAYOUT

Dual Port

Non-Shielded

RJE08-288-0X19

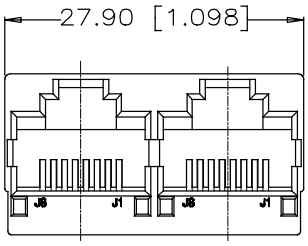

TOP VIEW

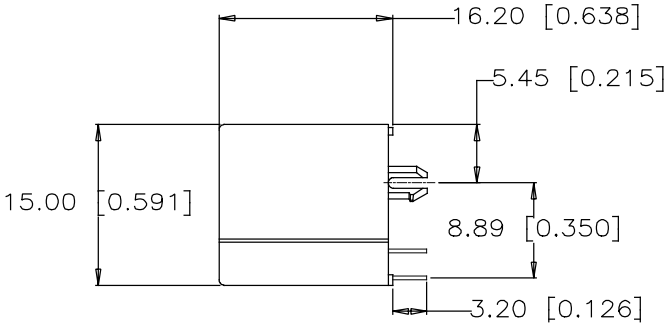

SIDE VIEW

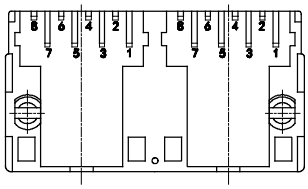

BOTTOM VIEW

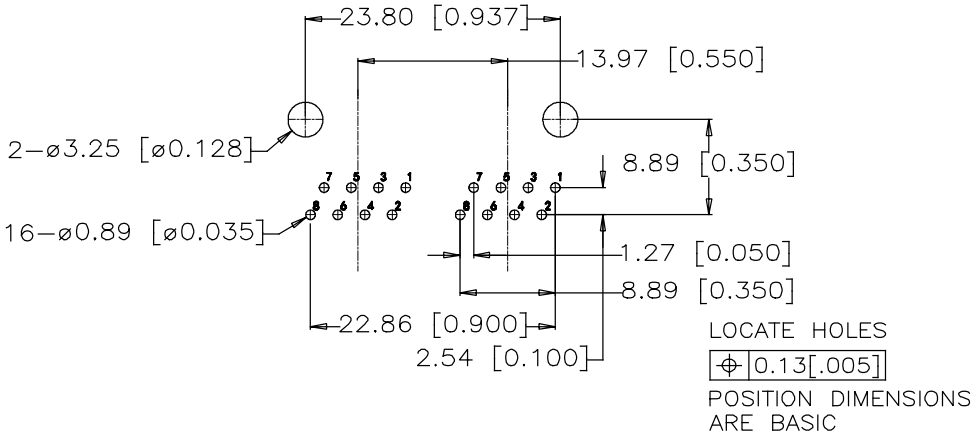

RECOMMENDED PCB LAYOUT

RJE74

SINGLE PORT, STANDARD PROFILE

SINGLE PORT, STANDARD PROFILE

The RJE74 series, with superior EMI shielding, is built to fit your RJ requirements. The vertical 10P10C version is available with an RMK4 key interface to prevent 8P8C plug from entering and damaging the connector. Includes optional Mylar cover for automated assembly equipment.

SPECIFICATIONS

Material

Insulator:	High temp. theromplastic; Complies with UL 94V-0; Black
Contacts:	Phosphor bronze hard temper with 30µ" min. gold thickness over 50µ" min. nickel on contact mating area; 100µ" min. matte tin plating on soldering tail
Shield:	Stainless steel; pure tin dipped tail

Electrical

Contact Resistance:	20 mΩ max.
Insulation resistance:	500 MΩ min. at 500V DC for 2 mins max.
Current Rating:	1.5 Amps per contact
Voltage Rating:	125 Volts AC
DWV:	1000 VAC, 60 Hz. 1 min.

Mechanical

Insertion Force:	5 lbs max.
Pull Retention Force:	20 lbs min.
Durability:	750 mating & unmating cycles
Recommended Soldering Temperature:	Peaked at 260°C for 5 secs max.
Operating Temperature:	-55°C to + 85°C
UL File Number:	E135615

Note: Suitable for IR Reflow

ORDERING INFORMATION

RJE74 - 1 X X - X X 1 X - X

Number of Ports
1 -1 Port

Number of Positions
8 - 8 Positions
A - 10 Positions

Number of Contacts
8 - 8 Contacts
A - 10 Contacts

Shield Options
0 - No shield
1 - Full shield

Packaging
Blank - PBT, tray, without Mylar
A - High temp housing, tray, without Mylar
H - High temp housing, tape & reel with Mylar

Modifier
0 - Standard product
1 - With RMK4 keying

Panel Stop Options
1 - No panel stop

Contact Plating
1 - 6µ" gold plating
2 - 15µ" gold plating
3 - 30µ" gold plating
4 - 50µ" gold plating

Didn't find what you were looking for?
Please contact sales@amphenolcanada.com and let us know what you need.

Click to Return to Table of Contents

RJE74

SINGLE PORT, STANDARD PROFILE

Single Port

Non-Shielded

RJE74-1AA-0X10

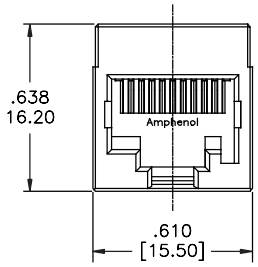

FRONT VIEW

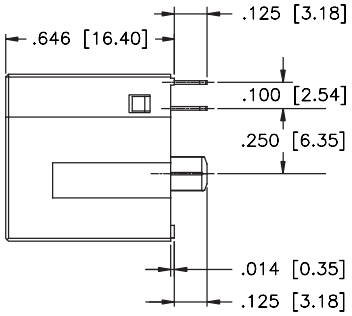

SIDE VIEW

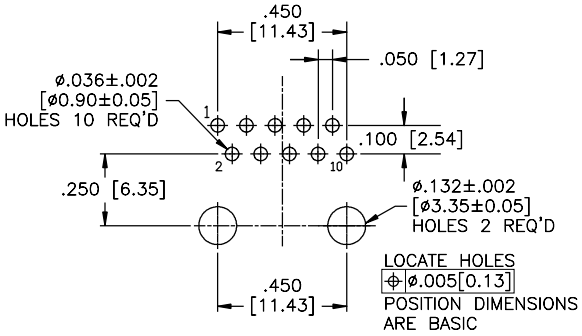

RECOMMENDED PCB LAYOUT

Non-Shielded with Keying

RJE74-1AA-0X11

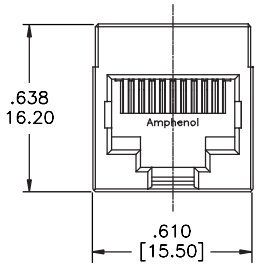

FRONT VIEW

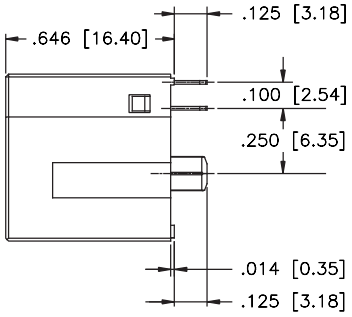

SIDE VIEW

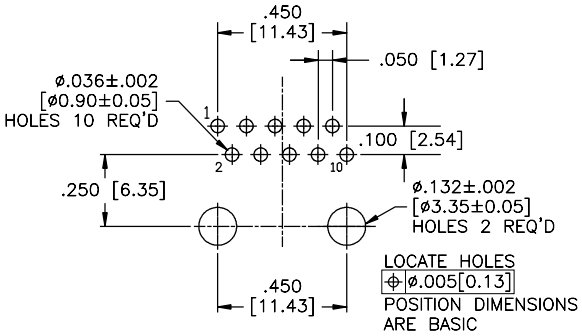

RECOMMENDED PCB LAYOUT

Shielded with Keying

RJE74-1AA-1X11

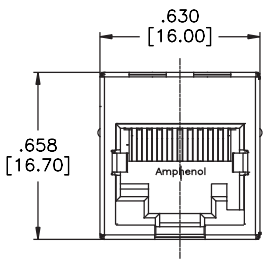

FRONT VIEW

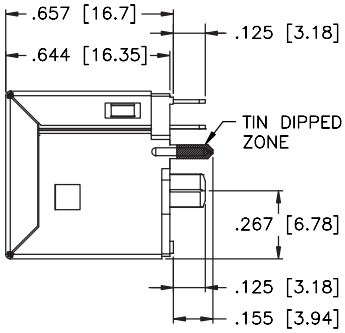

SIDE VIEW

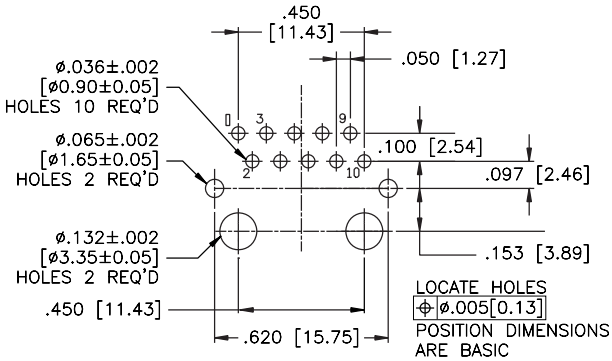

RECOMMENDED PCB LAYOUT

RJE88

SINGLE PORT, LOW PROFILE, WITH LEDs

SINGLE PORT, LOW PROFILE, WITH LEDs

Vertical through-hole (THT) in single port RJ45 configurations with full shield or superior EMI protection. A variety of LED options for link activity and network verification are available. Made with high temperature composite and when accompanied with our high temperature resistant LEDs, these connectors are well suited for the IR Reflow process.

SPECIFICATIONS

Material

Insulator:	High temp. theromplastic; Complies with UL 94V-0; Black
Contacts:	Phosphor bronze hard temper with gold thickness options (6µ", 15µ", 30µ", 50µ") over 50µ" min. nickel on contact mating area; 100µ" min. matte tin plating on soldering tail
Shield:	Stainless steel; pure tin dipped tail
LED:	Tin plating on LED tails

Mechanical

Insertion Force:	5 lbs max.
Pull Retention Force:	20 lbs min.
Durability:	750 mating & unmating cycles
Recommended Soldering Temperature:	Wave soldering peaked at 260°C for 5 secs max.
Operating Temperature:	-55°C to + 85°C

Note: Connectors without LEDs are suitable for IR Reflow

Electrical

Contact Resistance:	20 mΩ max.
Insulation resistance:	500 MΩ min. at 500V DC for 2 mins max.
Current Rating:	1.5 Amps per contact
Voltage Rating:	125 Volts AC
DWV:	1000 VAC, 60 Hz. 1 min.
LED Forward DC Current:	20mA typical
LED Forward Voltage:	1.9 Volts max. at 2mA (for single colours) 2.6 Volts max. at 2mA (for bicolours)
LED Reverse Voltage:	5 Volts min.
LED Light Intensity:	0.4 to 1.5 mcd min. at 2mA (for single colours) 0.5 mcd min. at 2mA (for bicolours)
LED Wave Length:	Yellow: 587 ± 7 nm measured at 20mA Green: 565 ± 6 nm measured at 20mA Red: 625 ± 5 nm measured at 20mAw

ORDERING INFORMATION

RJE88 - 1 8 8 - X X X X - X

Number of Ports
1 -1 Port

Number of Positions
8 - 8 Positions

Number of Contacts
8 - 8 Contacts

Shield Options
0 - No shield
1 - Shield with PCB tabs, no top and bottom tabs
2 - Shield with PCB tabs, top and bottom tabs

Packaging
Blank - Tray
T - T ape & Reel

Modifier
0 - 2.7mm (0.11") tail length
A - 3.5mm (0.14") tail length

LED Options
Click to view page 3 for options

Contact Plating
1 - 6µ" gold plating
2 - 15µ" gold plating
3 - 30µ" gold plating
4 - 50µ" gold plating

Didn't find what you were looking for?
Please contact sales@amphenolcanada.com and let us know what you need.

Click to Return to Table of Contents

RJE88

SINGLE PORT, LOW PROFILE, WITH LEDs

Single Port

Shielded

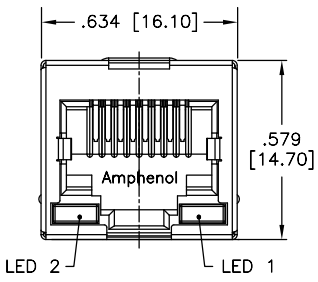

FRONT VIEW

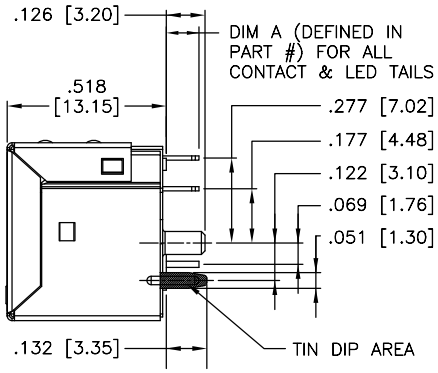

SIDE VIEW

RJE88-188-1XXX

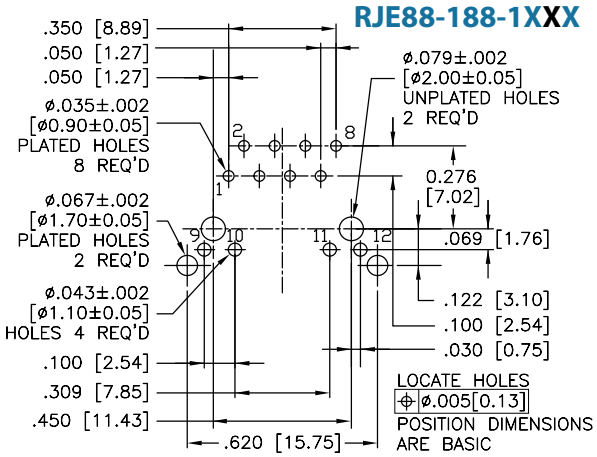

RECOMMENDED PCB LAYOUT

Non-Shielded

RJE88-188-0X0X

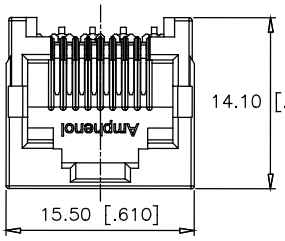

FRONT VIEW

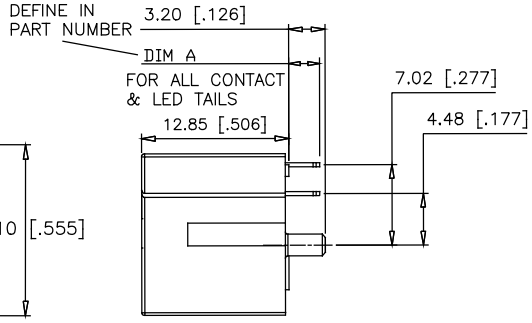

SIDE VIEW

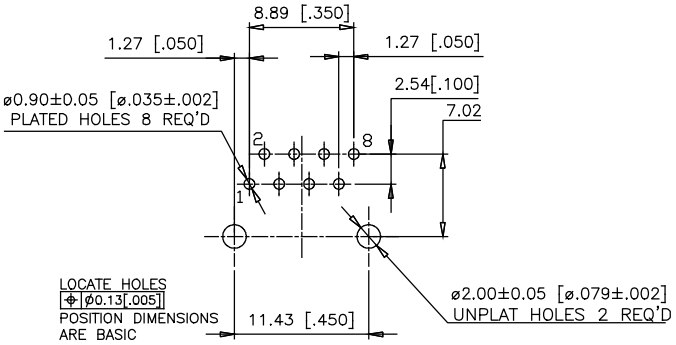

RECOMMENDED PCB LAYOUT

Notes

RJE1J

SINGLE PORT, NARROW PROFILE

PORT, NARROW PROFILE

Multiple position and contact options, single port, vertical connector with no shield or LED options. Made with high temperature thermoplastic this series is suitable for the IR Reflow process. This series is ideal for high volume cost sensitive programs.

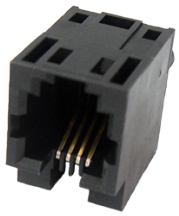

SPECIFICATIONS

Material

Insulator:	High temp. theromplastic; Complies with UL 94V-0; Black
Contacts:	Phosphor bronze hard temper with gold thickness options (6µ", 15µ", 30µ", 50µ") over 50µ" min. nickel on contact mating area; 100µ" min. matte tin plating on tail

Electrical

Contact Resistance:	20 mΩ max.
Insulation resistance:	500 MΩ min. at 500V DC for 2 mins max.
Current Rating:	1.5 Amps per contact
Voltage Rating:	125 Volts AC
DWV:	1000 VAC, 60 Hz. 1 min.

Mechanical

Insertion Force:	5 lbs max.
Pull Retention Force:	20 lbs min.
Durability:	750 mating & unmating cycles
Recommended Soldering Temperature:	Wave soldering peaked at 260°C for 5 secs max.
Operating Temperature:	-55°C to + 85°C
UL File Number:	E135615

Note: Suitable for IR Reflow

ORDERING INFORMATION

RJE1J - 1 X X - 0 X 1 0 - X

Number of Ports
- 1 -1 Port

Number of Positions
- 4 - 4 Positions
- 6 - 6 Positions
- 8 - 8 Positions

Number of Contacts
- 2 - 2 Contacts
- 4 - 4 Contacts
- 6 - 6 Contacts
- 8 - 8 Contacts

Shield Options
- 0 - No shield

Packaging
- Blank - Tray
- T - Tape & Reel

Modifier
- 0 - Standard product

Panel Stop Options
- 1 - Black housing

Contact Plating
- 1 - 6µ" gold plating
- 2 - 15µ" gold plating
- 3 - 30µ" gold plating
- 4 - 50µ" gold plating

Didn't find what you were looking for?
Please contact sales@amphenolcanada.com and let us know what you need.

Click to Return to Table of Contents

RJE1J

SINGLE PORT, NARROW PROFILE

Single Port

Non-Shielded

RJE1J-188-0X10

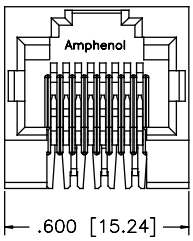

FRONT VIEW

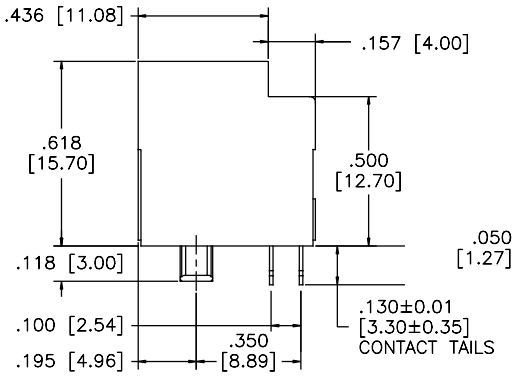

SIDE VIEW

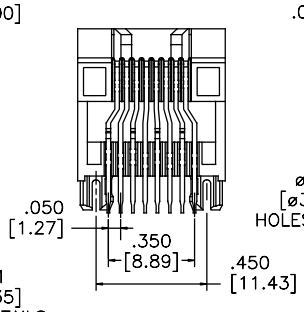

BOTTOM VIEW

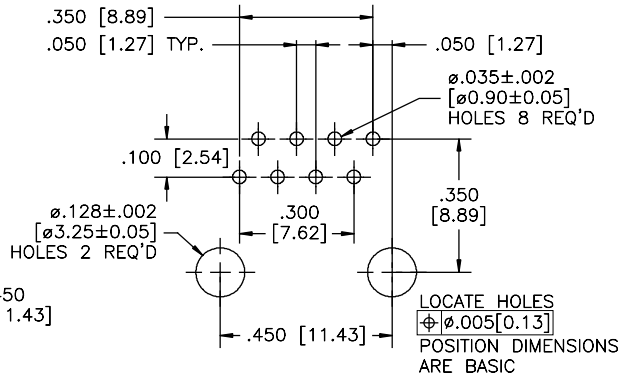

RECOMMENDED PCB LAYOUT

Non-Shielded

RJE1J-144-0X10

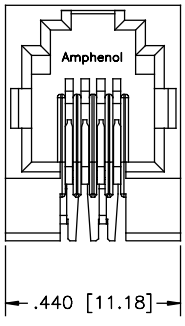

FRONT VIEW

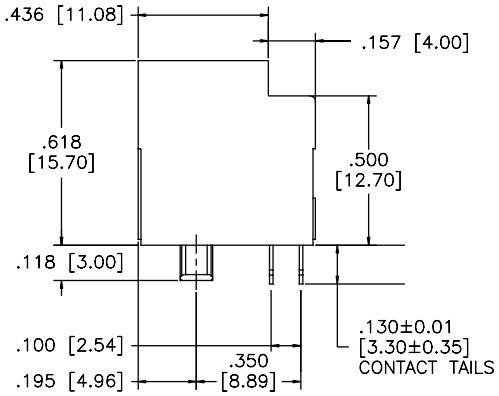

SIDE VIEW

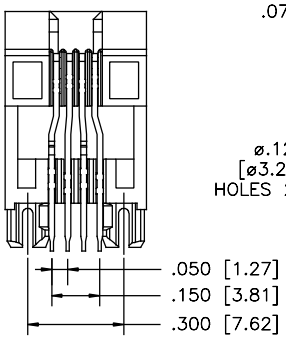

BOTTOM VIEW

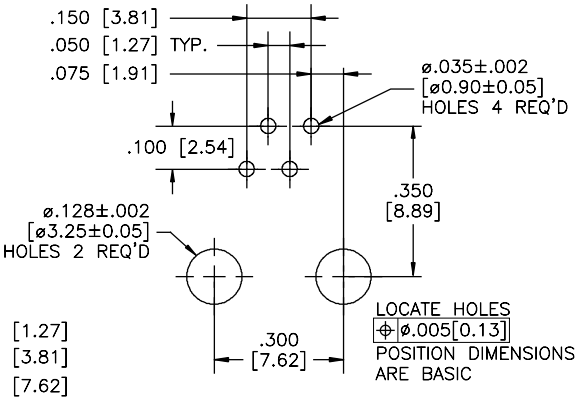

RECOMMENDED PCB LAYOUT

RJE23

SINGLE PORT, SURFACE MOUNT

SINGLE PORT, SURFACE MOUNT

The RJE23 series is designed for high volume production where a vertical modular jack is required. Shielding provides increased EMI performance. Surface mount contacts and hold-down nail bracket assist in speeding up the production process.

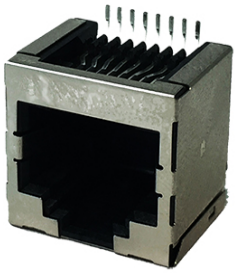

SPECIFICATIONS

Material

Insulator:	High temp. theromplastic; Complies with UL 94V-0; Black
Contacts:	Phosphor bronze hard temper with gold thickness options (6µ", 15µ", 30µ", 50µ") over 50µ" min. nickel on contact mating area; 100µ" min. matte tin plating over nickel on soldering tail
Shield:	Copper alloy; matte tin plating
Hold Down:	Copper alloy; matte tin plating
Coplanarity:	0.004" max. gap between all terminal tails

Mechanical

Insertion Force:	5 lbs max.
Pull Retention Force:	20 lbs min.
Durability:	750 mating & unmating cycles
Operating Temperature:	-55°C to + 85°C
UL File Number:	E135615

Note: Connector is suitable for IR Reflow

Electrical

Contact Resistance:	20 mΩ max.
Insulation resistance:	500 MΩ min. at 500V DC for 2 mins max.
Current Rating:	1.5 Amps per contact
Voltage Rating:	125 Volts AC
DWV:	1000 VAC, 60 Hz. 1 min.

ORDERING INFORMATION

RJE23 - 1 X X - X X X X - X

Number of Ports
1 -1 Port

Number of Positions
4 - 4 Positions
6 - 6 Positions
8 - 8 Positions

Number of Contacts
4 - 4 Contacts
6 - 6 Contacts
8 - 8 Contacts

Shield Options
0 - No shield
2 - Shield with no tabs
3 - Shield with side tabs

Packaging
Blank - Tray
T - Tape & Reel

Modifier
3 - Standard with solderplate & mylar tape
4 - Standard with solderplate
6 - Standard with solderplate inward

Housing/Panel Stop Options
1 - Black housing without panel stop
2 - Black housing with panel stop

Contact Plating
1 - 6µ" gold plating
2 - 15µ" gold plating
3 - 30µ" gold plating
4 - 50µ" gold plating

Didn't find what you were looking for?
Please contact sales@amphenolcanada.com and let us know what you need.

Click to Return to Table of Contents

RJE23

SINGLE PORT, SURFACE MOUNT

Single Port

Shielded

RJE23-188-3X16

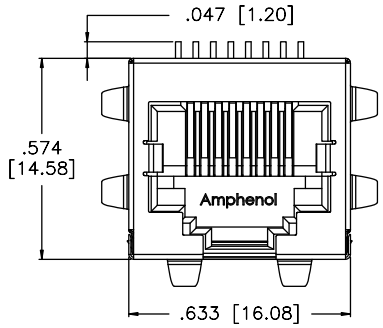

FRONT VIEW

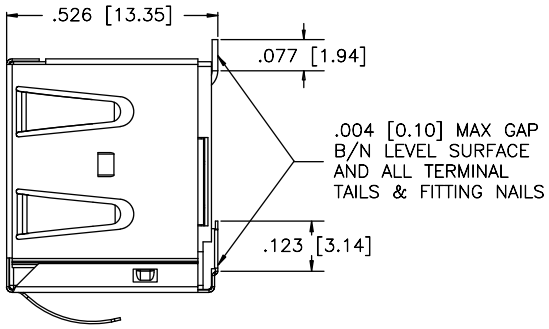

SIDE VIEW

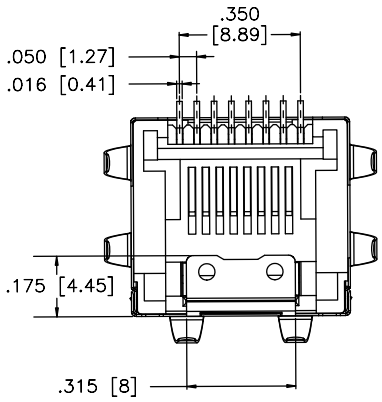

BOTTOM VIEW

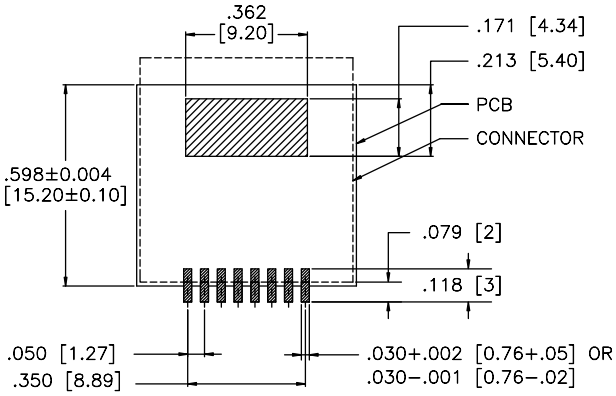

RECOMMENDED PCB LAYOUT

Non-Shielded

RJE23-188-0X13

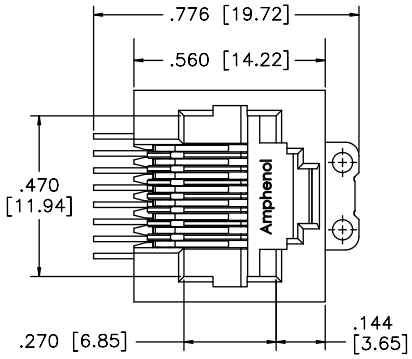

FRONT VIEW

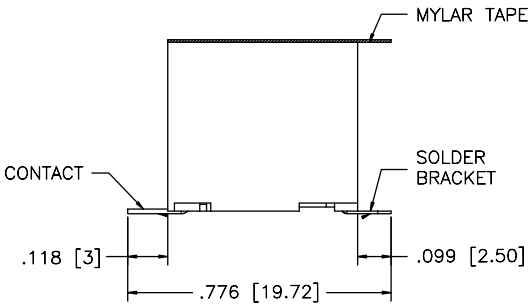

SIDE VIEW

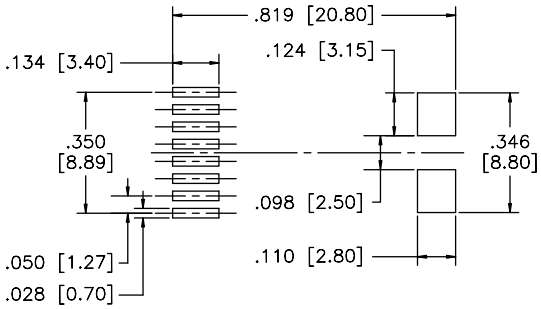

RECOMMENDED PCB LAYOUT

RJE4N

VERTICAL, 2X4 PORT

VERTICAL, 2X4 PORT

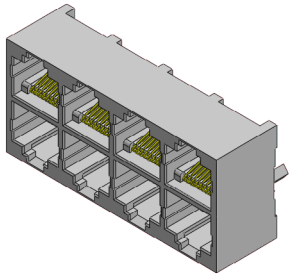

RJ45, vertical, multi-port connector in a 2x4 port configuration. Standard height profile available in both shielded and unshielded versions. Can be designed into various networking devices that require multiple ports and limited space.

SPECIFICATIONS

Material

Insulator:	Engineering thermoplastic, complies with UL94V-0, Black colour
Contacts:	Phosphor bronze hard temper with gold thickness options (6µ", 15µ", 30µ", 50µ") over 50µ" min. nickel on contact mating area; 100µ" minimum Nickel on contact mating area Gold flash on soldering tails
Shield:	Copper alloy with Nickel plating underplated

Mechanical

Insertion Force:	5 lbs max.
Pull Retention Force:	20 lbs min.
Durability:	750 mating & unmating cycles
Operating Temperature:	-55°C to + 85°C
Soldering Temperature:	Wave soldering peaked at 260°C for 5 seconds maximum

Electrical

Contact Resistance:	20 mΩ max.
Insulation resistance:	500 MΩ min. at 500V DC for 2 mins max.
Current Rating:	1.5 Amps per contact
Voltage Rating:	125 Volts AC
DWV:	1000 VAC, 60 Hz. 1 min.

ORDERING INFORMATION

RJE4N - 8 8 8 - X X 01

Number of Ports
8 - 8 Ports

Number of Positions
8 - 8 Positions

Number of Contacts
8 - 8 Contacts

Shield Options
0 - No shield
1 - Full Shield

Modifier
01- Standard Product

Contact Plating
1 - 6µ" gold plating
2 - 15µ" gold plating
3 - 30µ" gold plating
4 - 50µ" gold plating

Didn't find what you were looking for?
Please contact sales@amphenolcanada.com and let us know what you need.

Click to Return to Table for Contents

RJE4N

VERTICAL, 2X4 PORT

Eight Ports

RJE4N-888-1X01

Shielded

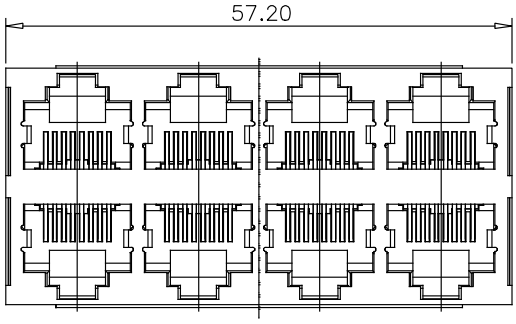

FRONT VIEW

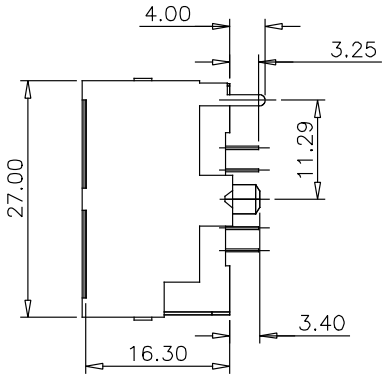

SIDE VIEW

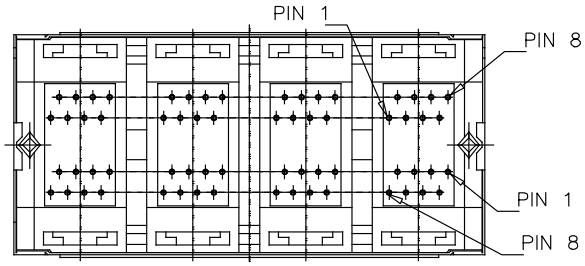

BOTTOM VIEW

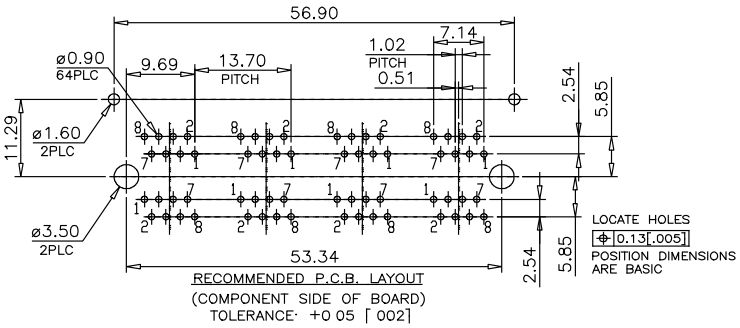

RECOMMENDED PCB LAYOUT

Notes

RJE36

RJ45 OVER USB

RJ45 OVER USB

RJ 45 over USB 2.0 type. A unique series that combines two different types of connectors: RJ45 and USB connectors. Configurations include RJ45 over a single USB and RJ45 over two USBs. The RJ is available with or without LEDs for link activity and network verification. Full shield for superior EMI protection with EMI tabs options.

SPECIFICATIONS

Material

Insulator:	Engineering thermoplastic; Complies with UL 94V-0; Black
Contacts:	Phosphor bronze hard temper with gold thickness options (6µ", 15µ", 30µ", 50µ") over 50µ" min. nickel on contact mating area; 100µ" min. matte tin plating on soldering tail
Shield:	Copper alloy plated with Nickel
LED:	Tin plating on LED tails

Mechanical

Insertion Force:	5 lbs max.
Pull Retention Force:	20 lbs min.
Durability:	750 mating & unmating cycles
Recommended Soldering Temperature:	Wave soldering peaked at 260°C for 5 secs max.
Operating Temperature:	-20°C to + 85°C
UL File #:	E136228

Electrical

Contact Resistance:	20 mΩ max.
Insulation resistance:	500 MΩ min. at 500V DC for 2 mins max.
Current Rating:	1.5 Amps per contact
Voltage Rating:	125 Volts AC
DWV:	Contact to contact: 1000 VAC, 60 Hz. 1 min.
LED Forward DC Current:	20mA typical
LED Forward Voltage:	1.6 -2.4 Volts max. at 2mA (for single colours)
LED Reverse Voltage:	5 Volts min.
LED Light Intensity:	2 to 12 mcd min. at 20mA (for single colours)
LED Wave Length:	Yellow: 590 ± 5 nm measured at 20mA Green: 570 ± 5 nm measured at 20mA Red: 650 ± 15 nm measured at 20mA

ORDERING INFORMATION

RJE36 - 1 8 8 - X X X X

Number of Ports
1 - 1 Port RJ45

Number of Positions
8 - 8 Positions

Number of Contacts
8 - 8 Contacts

Shield Options
0 - No shield
1 - Shield without top and side tabs, but with front tabs
2- Shield without top and side tabs
3 - Shield with top and side tabs

Modifier
3 - RJ45 over one USB 2.0
5 - RJ45 over two USB 3.0
7 - RJ45 over single USB 3.0

LED Options
Click to view page 3 for options

Contact Plating
1 - 6µ" gold plating
2 - 15µ" gold plating
3 - 30µ" gold plating
4 - 50µ" gold plating

Didn't find what you were looking for?
Please contact sales@amphenolcanada.com and let us know what you need.

RJE36

RJ45 OVER USB

Single Port

Shielded

RJE36-188-2X03

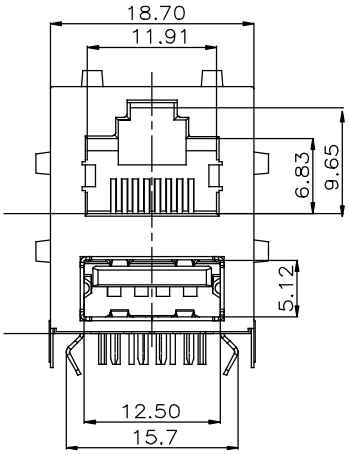

FRONT VIEW

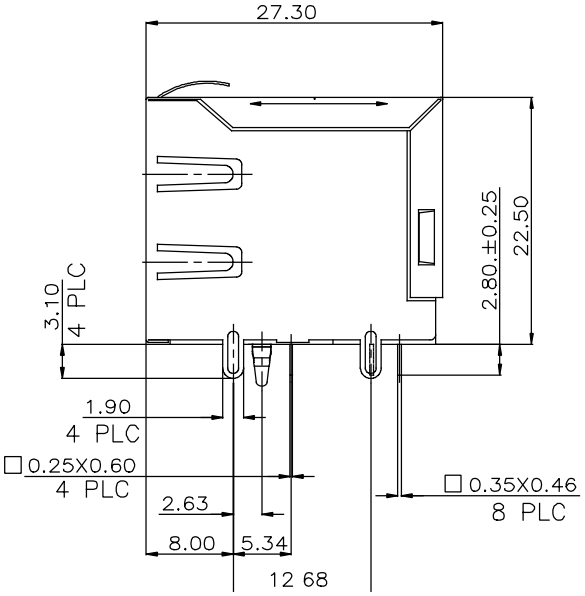

SIDE VIEW

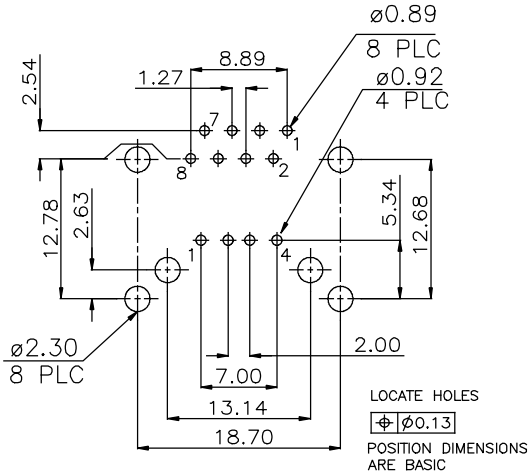

RECOMMENDED PCB LAYOUT

Dual Port

Shielded with LEDs

RJE36-188-3XX5

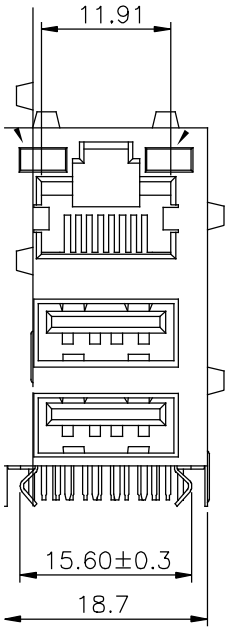

FRONT VIEW

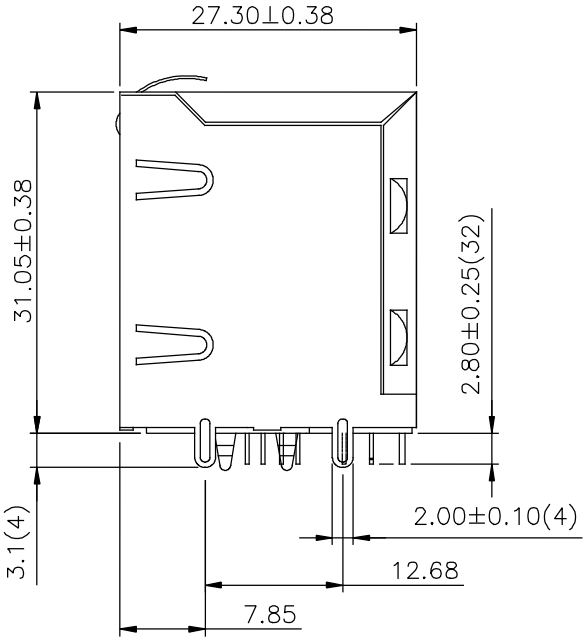

SIDE VIEW

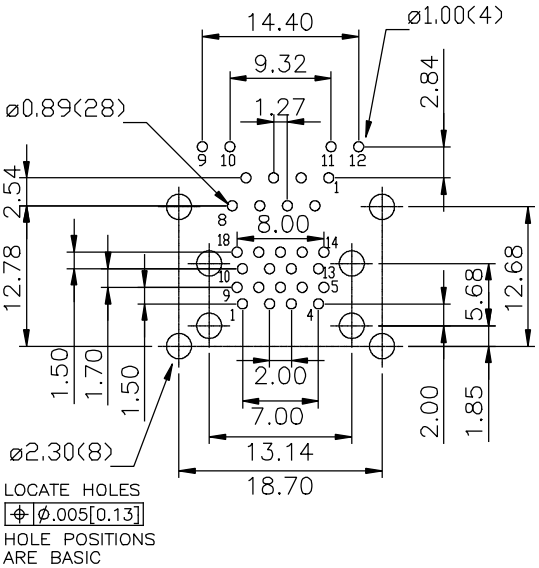

RECOMMENDED PCB LAYOUT

RJSAE

2, 4 AND 8 PORTS WITH LED AND SHIELD OPTIONS

2, 4 AND 8 PORTS WITH LED AND SHIELD OPTIONS

The RJSAE is a RJ45 stackable connector that reduces component and labor costs by incorporating LEDs. Its stackable feature enables more ports with the same board space. With superior EMI performance, the option of configuring your connector with a ferrite filter is available to further reduce crosstalk in noisy applications.

SPECIFICATIONS

Material

Insulator:	High temp. thermoplastic; Complies with UL 94V-0; Black
Contacts:	Phosphor bronze hard temper with gold thickness options (6µ", 15µ", 30µ", 50µ") over 50µ" min. nickel on contact mating area; 100µ" min. matte tin plating on tail
Shield:	Copper alloy; nickel plated or stainless steel with tin dripped tail (as specified in drawing)
LED:	Tin plating on LED tail

Mechanical

Insertion Force:	5 lbs max.
Pull Retention Force:	20 lbs min.
Durability:	750 mating & unmating cycles
Recommended Soldering Temperature:	Wave soldering peaked at 260°C for 5 secs max.
Operating Temperature:	-55°C to + 85°C
UL File #:	E135615
CSA File #:	150190

Note: Connectors without LEDs are suitable for IR Reflow; Connectors with Reflow LEDs available

Electrical

Contact Resistance:	20 mΩ max.
Insulation resistance:	500 MΩ min. at 500V DC for 2 mins max.
Current Rating:	1.5 Amps per contact
Voltage Rating:	125 Volts AC
DWV:	Contact to contact: 1000 VAC, 60 Hz. 1 min.
LED Forward DC Current:	20mA typical
LED Forward Voltage:	1.9 Volts max. at 2mA (for single colours) 2.6 Volts max. at 2mA (for bicolours)
LED Reverse Voltage:	5 Volts min.
LED Light Intensity:	0.4 to 1.5 mcd min. at 2mA (for single colours) 0.5 mcd min. at 2mA (for bicolours)
LED Wave Length:	Yellow: 587 ± 7 nm measured at 20mA Green: 565 ± 6 nm measured at 20mA Red: 625 ± 5 nm measured at 20mA

ORDERING INFORMATION

RJSAE - X X X X - X X

Version
- 5 - 8 Positions, 50µ" gold plating
- 7 - 6 Positions, 50µ" gold plating
- 8 - 8 Positions over 6, 50µ" gold plating

Shield Options
- 0 - No shield
- 2 - Shield with top and side tabs, with filter
- 3 - Shield with top and side tabs, no filter
- F - Shield without top and side tabs

Number of Contacts
- 4 - 4 Contacts
- 6 - 6 Contacts
- 8 - 8 Contacts

Number of Ports
- 2 - 2 Ports (1 over 1)
- 4 - 4 Ports (2 over 2)
- 8 - 8 Ports (4 over 4)

Contact Length
- 0 - Standard 0.1" (2.54mm)
- A - 0.130" (3.30mm)
- B - 0.138" (3.51mm)

LED Options
- Click to view page 3 for options

Didn't find what you were looking for?
Please contact sales@amphenolcanada.com and let us know what you need.

Click to Return to Table of Contents

RJSAE

2, 4 AND 8 PORTS WITH LED AND SHIELD OPTIONS

Single Port

Non-Shielded

RJSAE-508X-02

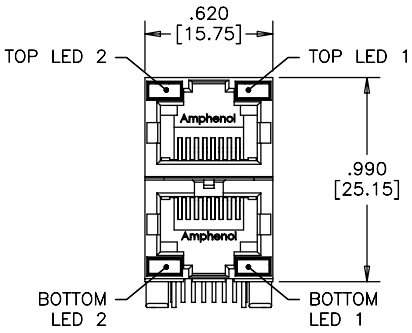

FRONT VIEW

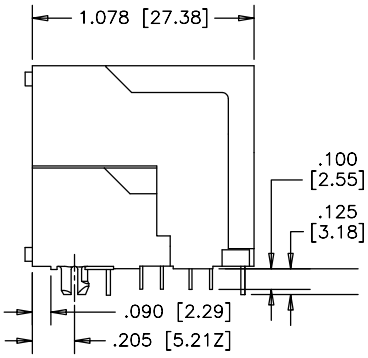

SIDE VIEW

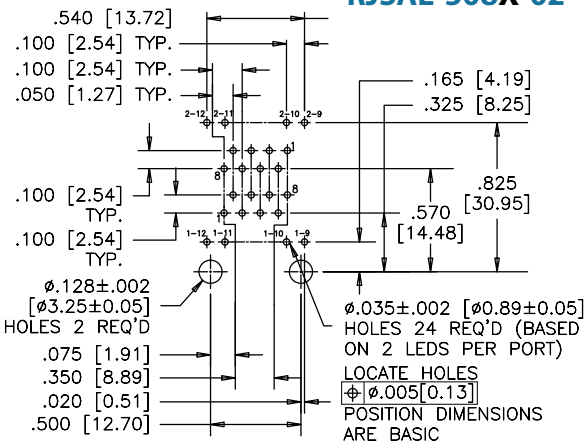

RECOMMENDED PCB LAYOUT

Shielded

RJSAE-538X-02

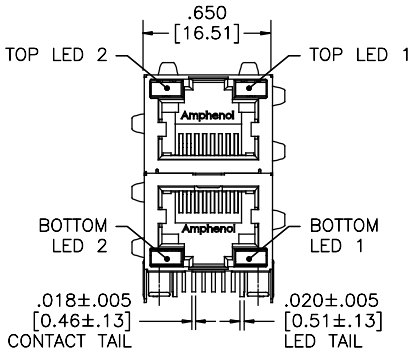

FRONT VIEW

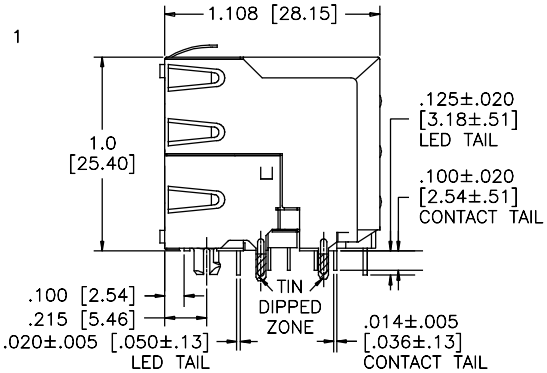

SIDE VIEW

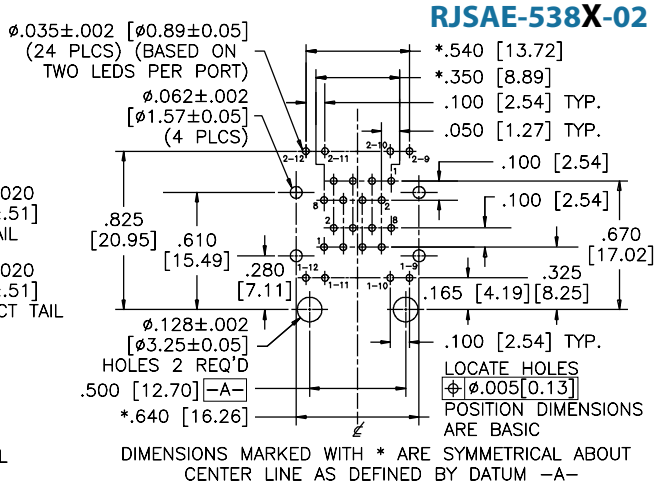

RECOMMENDED PCB LAYOUT

Multi Port

Non-Shielded

RJSAE-508X-08

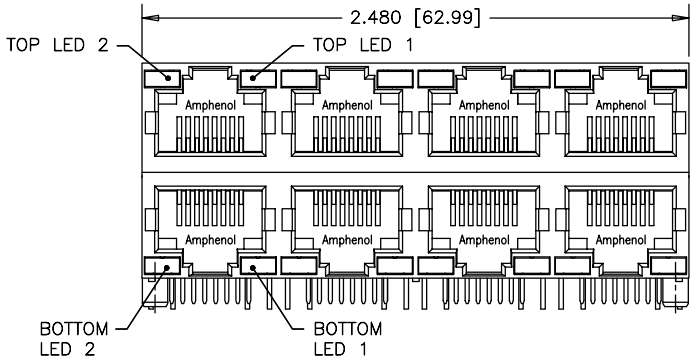

FRONT VIEW

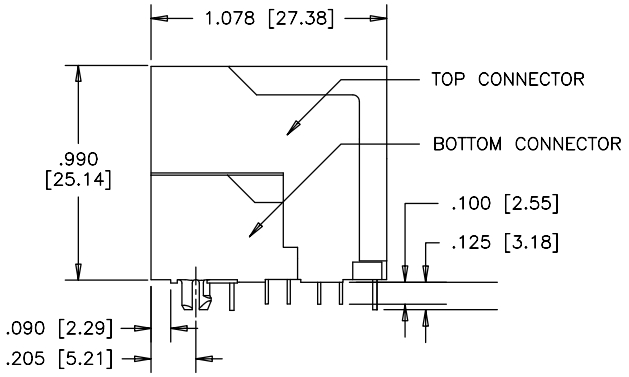

SIDE VIEW

RJSAE

2, 4 AND 8 PORTS WITH LED AND SHIELD OPTIONS

Multi Port

Non-Shielded

RJSAE-508X-08

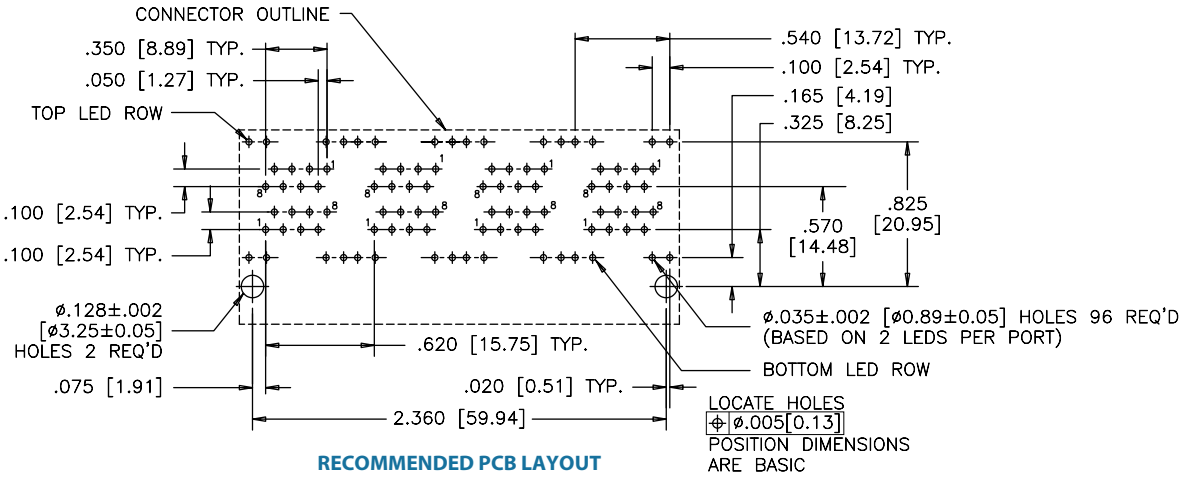

RECOMMENDED PCB LAYOUT

Shielded

RJSAE-538X-08

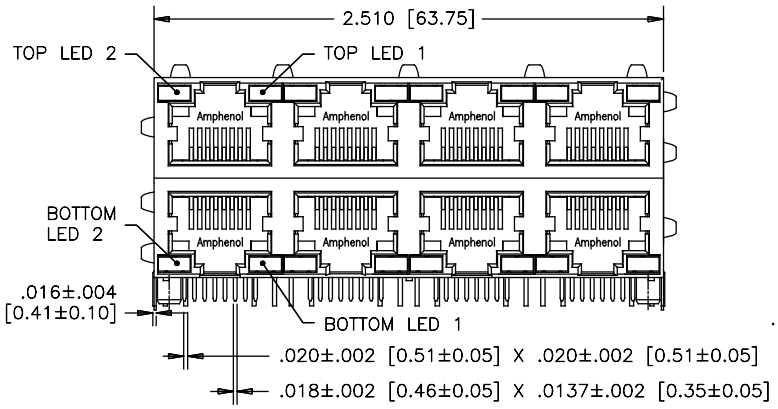

FRONT VIEW

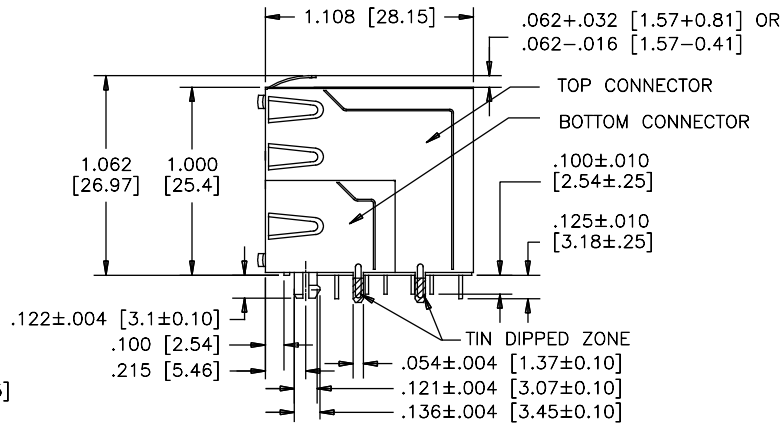

SIDE VIEW

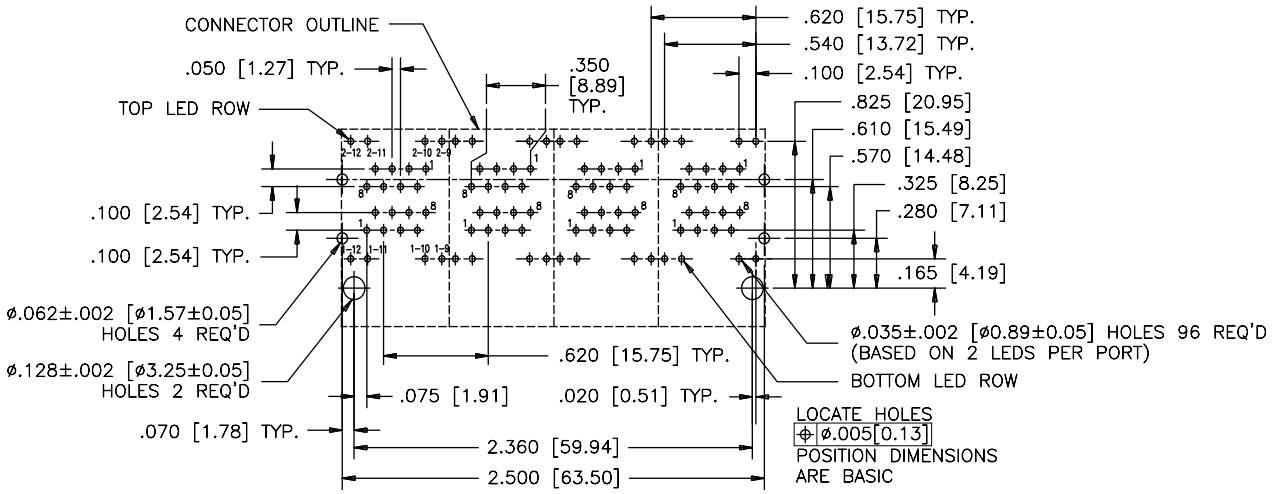

RECOMMENDED PCB LAYOUT

Amphenol Commercial Products - Amphenol Canada Corp. | Telephone: (416) 291-4401 | Fax: (416) 754-8668 | Email: sales@amphenolcanada.com
All specifications are subject to change without notice. Catalogue is updated regularly. Please refer to www.amphenolcanada.com for the most recent edition.

RJSNE

4 OVER 4 PORTS WITH LED AND SHIELD OPTIONS

4 OVER 4 PORTS WITH LED AND SHIELD OPTIONS

The RJSNE series is a stacked connector that offers LED options for link activity and network verification. It is available with or without shielding. The RJSNE series also includes a unique inner shield device to reduce the crosstalk between top and bottom ports.

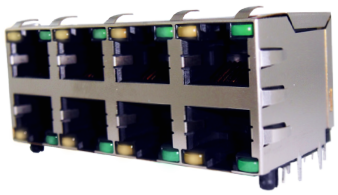

SPECIFICATIONS

Material

Insulator:	Engineering thermoplastic; Complies with UL 94V-0; Black
Contacts:	Phosphor bronze hard temper with gold thickness options (6µ", 15µ", 30µ", 50µ") over 50µ" min. nickel on contact mating area; 100µ" min. matte tin plating on tail
Shield:	Copper alloy; nickel plated or stainless steel with tin dipped tail
LED:	Pure tin plating on LED tail

Mechanical

Insertion Force:	5 lbs max.
Pull Retention Force:	20 lbs min.
Durability:	750 mating & unmating cycles
Recommended Soldering Temperature:	Wave soldering peaked at 260°C for 5 secs max.
Operating Temperature:	-40°C to + 85°C
UL File #:	E135615
CSA File #:	150190

Electrical

Contact Resistance:	20 mΩ max.
Insulation resistance:	500 MΩ min. at 500V DC for 2 mins max.
Current Rating:	1.5 Amps per contact
Voltage Rating:	125 Volts AC
DWV:	1000 VAC, 60 Hz. 1 min.
LED Forward DC Current:	20mA typical
LED Forward Voltage:	1.9 Volts max. at 2mA (for single colours) 2.6 Volts max. at 20mA (for bicolours)
LED Reverse Voltage:	5 Volts min.
LED Light Intensity:	0.4 to 1.5 mcd min. at 2mA (for single colours) 0.5 mcd min. at 2mA (for bicolours)
LED Wave Length:	Yellow: 587 ± 7 nm measured at 20mA Green: 565 ± 6 nm measured at 20mA Red: 625 ± 5 nm measured at 20mA

ORDERING INFORMATION

RJSNE - X X X X - X 8

Version
- 5 - 8 Positions, 50µ" gold plating
- D - 8 Positions, 6µ" gold plating
- G - 8 Positions, 15µ" gold plating
- J - 8 Positions, 30µ" gold plating

Shield Options
- 0 - No shield
- 3 - Shield with top and side tabs, no filter
- F - Shield without top and side tabs

Number of Ports
- 8 - 8 Ports (4 over 4)

Contact Length
- 0 - Standard 0.1" (2.54mm)
- A - 0.130" (3.30mm)

LED Options
- Click to view page 3 for options

Number of Contacts
- 4 - 4 Contacts
- 6 - 6 Contacts
- 8 - 8 Contacts

Didn't find what you were looking for?
Please contact sales@amphenolcanada.com and let us know what you need.

Click to Return to Table of Contents

RJSNE

2, 4 AND 8 PORTS WITH LED AND SHIELD OPTIONS

Single Port

RJSNE-538X-X8

Non-Shielded

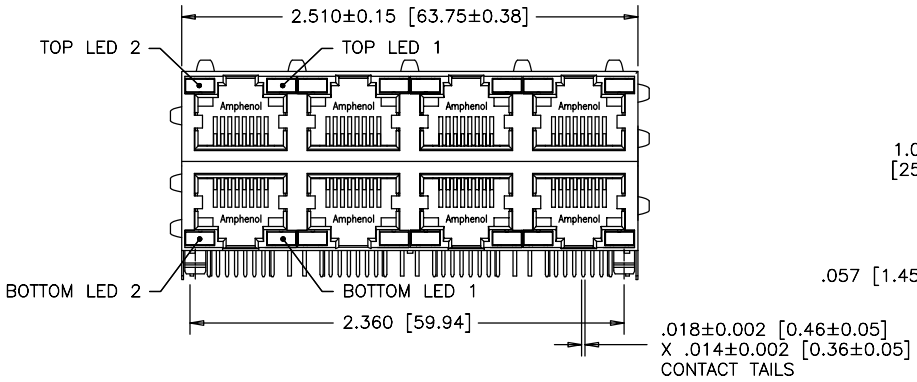

FRONT VIEW

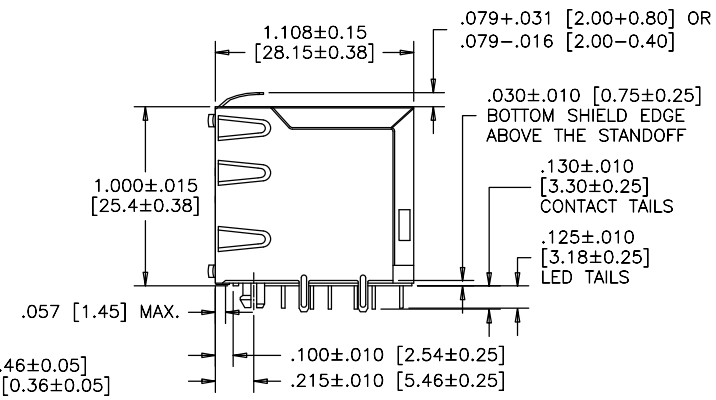

SIDE VIEW

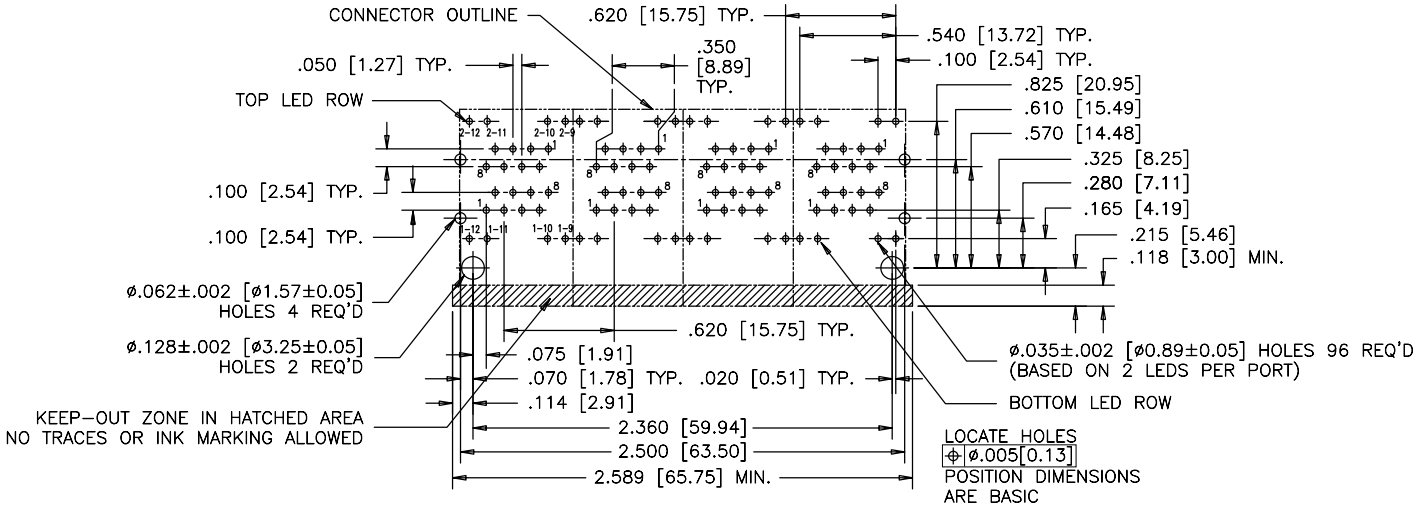

RECOMMENDED PCB LAYOUT

Notes

Amphenol Commercial Products - Amphenol Canada Corp. | Telephone: (416) 291-4401 | Fax: (416) 754-8668 | Email: sales@amphenolcanada.com
All specifications are subject to change without notice. Catalogue is updated regularly. Please refer to www.amphenolcanada.com for the most recent edition.

RJE48

CAT 5e, RIGHT ANGLE, LOW PROFILE, WITH LEDs

RIGHT ANGLED, LOW PROFILE, WITH LEDs

The RJE48 series of modular jacks meet CAT 5e performance per EIA-568-C.2. It supports Gigabit Ethernet Protocols. Shielding is available for increased EMI performance and LEDs for link activity and network verification.

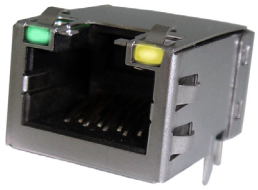

SPECIFICATIONS

Material

Insulator:	High temp. thermoplastic; Complies with UL 94V-0; Black
Contacts:	Phosphor bronze hard temper with gold thickness options (6µ", 15µ", 30µ", 50µ") over 50µ" min. nickel on contact mating area; 100µ" min. matte tin plating on solder tails
Shield:	Stainless steel with tin dipped tails
LED:	Tin plating on LED tail

Mechanical

Insertion Force:	5 lbs max.
Pull Retention Force:	20 lbs min.
Durability:	750 mating & unmating cycles
Recommended Soldering Temperature:	Wave soldering peaked at 260°C for 5 secs max.
Operating Temperature:	-55°C to + 85°C
UL File Number:	E135615

Electrical

Contact Resistance:	20 mΩ max.
Insulation resistance:	500 MΩ min. at 500V DC for 2 mins max.
Current Rating:	1.25 Amps per contact
Voltage Rating:	125 Volts AC
DWV:	1000 VAC, 60 Hz. 1 min.
LED Forward DC Current:	20mA typical
LED Forward Voltage:	1.9 Volts max. at 2mA (for single colours) 2.6 Volts max. at 20mA (for bicolours)
LED Reverse Voltage:	5 Volts min.
LED Light Intensity:	0.4 to 1.5 mcd min. at 2mA (for single colours) 0.5 mcd min. at 2mA (for bicolours)
LED Wave Length:	Yellow: 587 ± 7 nm measured at 20mA Green: 565 ± 6 nm measured at 20mA Red: 625 ± 5 nm measured at 20mA

ORDERING INFORMATION

RJE48 - X 8 8 - X X X 1 - X

Number of Ports
- 1 - 1 Port
- 4 - 4 Port

Number of Positions
- 8 - 8 Positions

Number of Contacts
- 8 - 8 Contacts

Shield Options
- 0 - No shield
- 1 - Full shield with top and side tabs
- 3 - Full shield with top tabs only

Packaging
- Blank - Tray
- T - Tape & Reel

Modifier
- 1 - 3.00mm tail length

LED Options
- Click to view page 3 for options

Contact Plating
- 1 - 6µ" gold plating
- 2 - 15µ" gold plating
- 3 - 30µ" gold plating
- 4 - 50µ" gold plating

Didn't find what you were looking for?
Please contact sales@amphenolcanada.com and let us know what you need.

Click to Return to Table of Contents

RJE48

CAT 5e, RIGHT ANGLE, LOW PROFILE, WITH LEDs

Single Port

RJE48-188-1XX1

Shielded

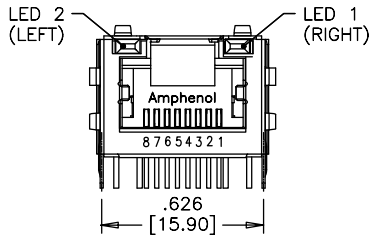

FRONT VIEW

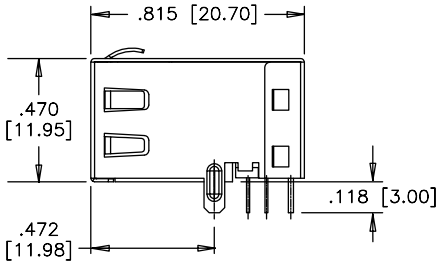

SIDE VIEW

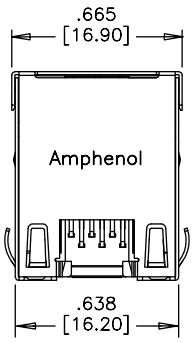

TOP VIEW

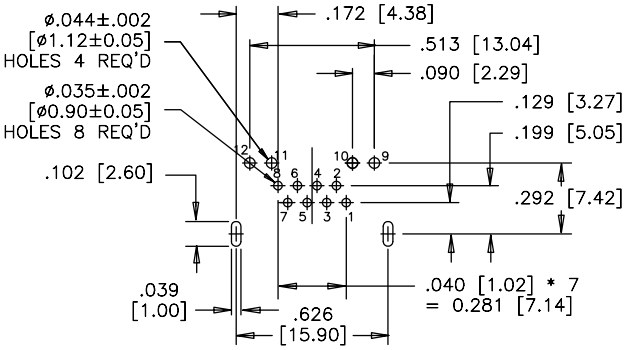

RECOMMENDED PCB LAYOUT

Multi Port

RJE48-488-1XX1

Shielded

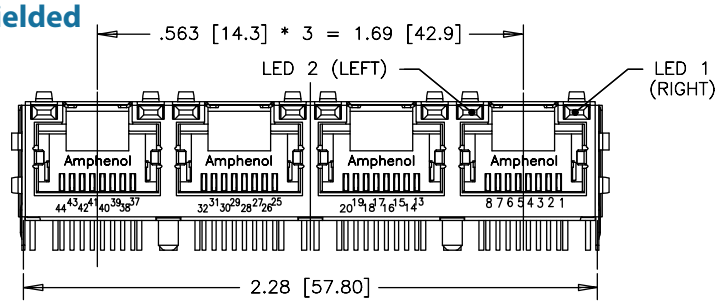

FRONT VIEW

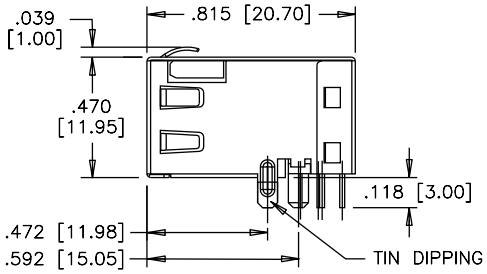

SIDE VIEW

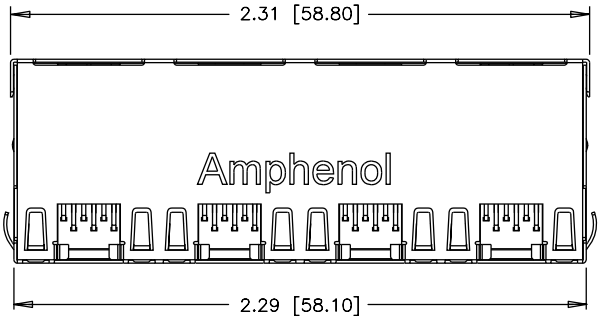

TOP VIEW

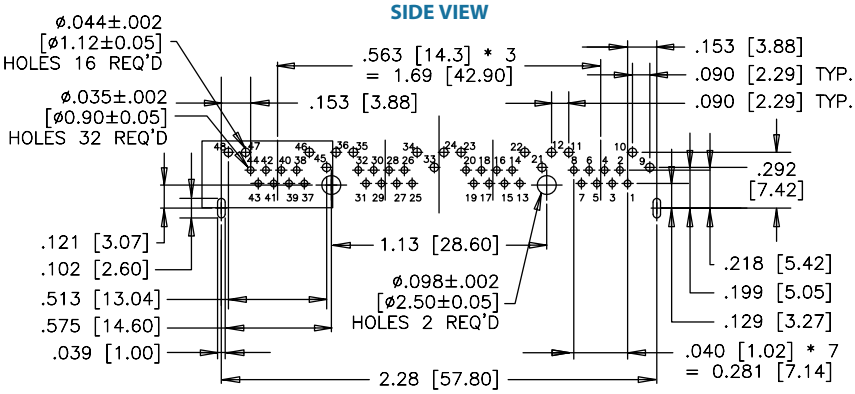

RECOMMENDED PCB LAYOUT

Amphenol Commercial Products - Amphenol Canada Corp. | Telephone: (416) 291-4401 | Fax: (416) 754-8668 | Email: sales@amphenolcanada.com
All specifications are subject to change without notice. Catalogue is updated regularly. Please refer to www.amphenolcanada.com for the most recent edition.

RJE58

CAT 5e, RIGHT ANGLE, STANDARD PROFILE, WITH LEDs

RIGHT ANGLED, STANDARD PROFILE, WITH LEDs

The RJE58 series of modular jacks meet CAT 5e performance per EIA-568-C.2. It supports Gigabit Ethernet Protocols. Shielding is available for increased EMI performance and LEDs for link activity and network speed verification.

SPECIFICATIONS

Material

Insulator:	High temp. thermoplastic; Complies with UL 94V-0; Black
Contacts:	Phosphor bronze hard temper with gold thickness options (6µ", 15µ", 30µ", 50µ") over 50µ" min. nickel on contact mating area; 100µ" min. matte tin plating on solder tails
Shield:	Stainless steel with tin dipped tails
LED:	Tin plating on LED tail

Mechanical

Insertion Force:	5 lbs max.
Pull Retention Force:	20 lbs min.
Durability:	750 mating & unmating cycles
Recommended Soldering Temperature:	Wave soldering peaked at 260°C for 10 secs. max, for one cycle with an LED defect rate of no more than 100 ppm
Operating Temperature:	-55°C to + 85°C
UL File Number:	E135615

Electrical

Contact Resistance:	20 mΩ max.
Insulation resistance:	500 MΩ min. at 500V DC for 2 mins max.
Current Rating:	1.25 Amps per contact
Voltage Rating:	125 Volts AC
DWV:	1000 VAC, 60 Hz. 1 min.
LED Forward DC Current:	20mA typical
LED Forward Voltage:	1.9 Volts max. at 2mA (for single colours) 2.6 Volts max. at 20mA (for bicolours)
LED Reverse Voltage:	5 Volts min.
LED Light Intensity:	0.4 to 1.5 mcd min. at 2mA (for single colours) 0.5 mcd min. at 2mA (for bicolours)
LED Wave Length:	Yellow: 587 ± 7 nm measured at 20mA Green: 565 ± 6 nm measured at 20mA Red: 625 ± 5 nm measured at 20mA

ORDERING INFORMATION

RJE58 - 1 8 8 - X X X X - X

Number of Ports
1 - 1 Port

Number of Positions
8 - 8 Positions

Number of Contacts
8 - 8 Contacts

Shield Options
3 - Full shield with top tabs
5 - Full shield with top and side tabs
6 - Full shield without tabs

Packaging
Blank - Tray
T - Tape & Reel

Modifier
1 - Standard with boardlocks
2 - Without boardlocks

LED Options
Click to view page 3 for options

Contact Plating
1 - 6µ" gold plating
2 - 15µ" gold plating
3 - 30µ" gold plating
4 - 50µ" gold plating

Didn't find what you were looking for?
Please contact sales@amphenolcanada.com and let us know what you need.

RJE58

CAT 5e, RIGHT ANGLE, STANDARD PROFILE, WITH LEDs

Single Port

RJE58-188-3XX1

Shielded - Option 3

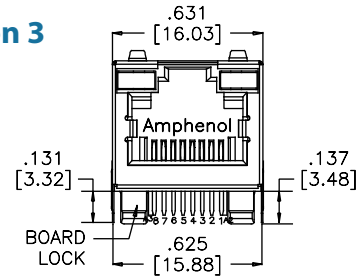

FRONT VIEW

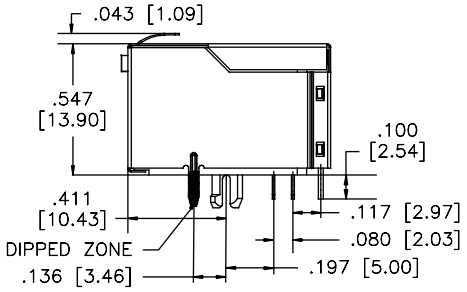

SIDE VIEW

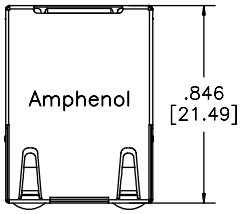

TOP VIEW

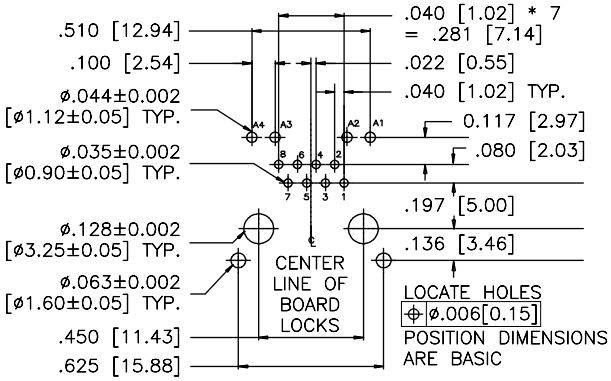

RECOMMENDED PCB LAYOUT

Shielded - Option 5

RJE58-188-5XX1

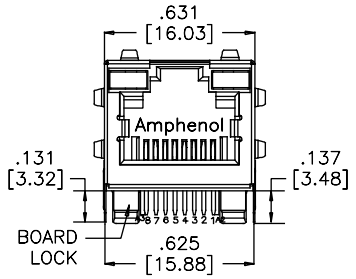

FRONT VIEW

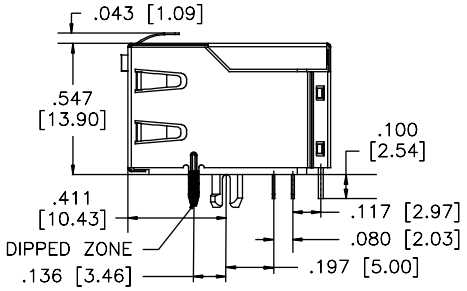

SIDE VIEW

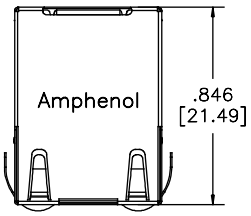

TOP VIEW

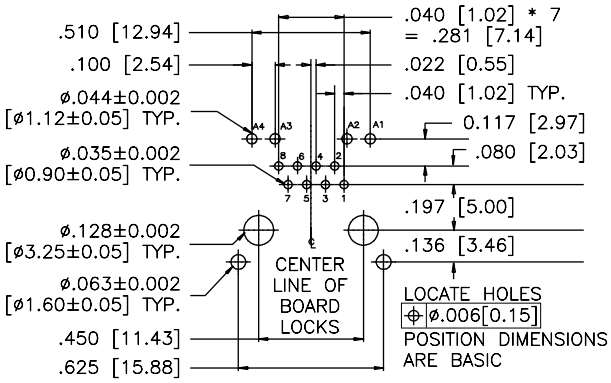

RECOMMENDED PCB LAYOUT

Amphenol Commercial Products - Amphenol Canada Corp. | Telephone: (416) 291-4401 | Fax: (416) 754-8668 | Email: sales@amphenolcanada.com
All specifications are subject to change without notice. Catalogue is updated regularly. Please refer to www.amphenolcanada.com for the most recent edition.

RJE58

CAT 5e, RIGHT ANGLE, STANDARD PROFILE, WITH LEDs

Single Port

Shielded - Option 6

RJE58-188-6XX1

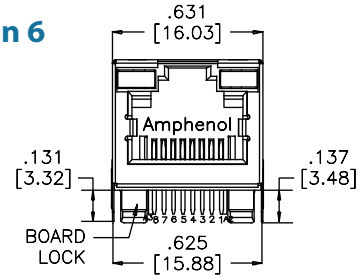

FRONT VIEW

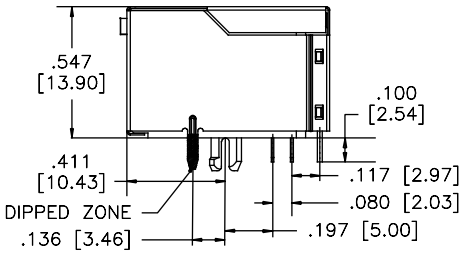

SIDE VIEW

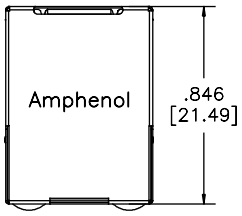

TOP VIEW

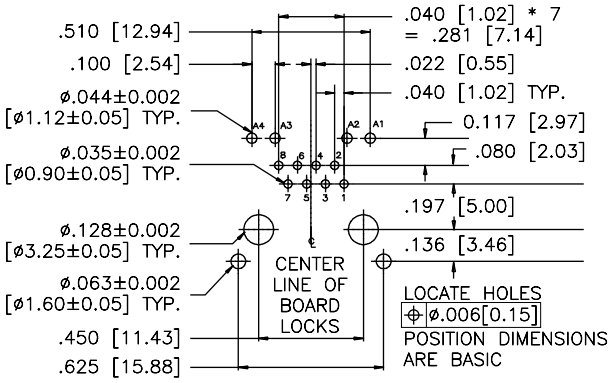

RECOMMENDED PCB LAYOUT

Notes

RJE72

CAT 5e, RIGHT ANGLE, RECESSED, LOW PROFILE WITH LEDs

RIGHT ANGLE, RECESSED, LOW PROFILE WITH LEDs

The RJE72 series of modular jacks meet CAT 5e performance per EIA-568-C.2. It supports Gigabit Ethernet Protocols. Shielding available for increased EMI performance and LEDs for link activity and network speed verification.

SPECIFICATIONS

Material

Insulator:	High temp. thermoplastic; Complies with UL 94V-0; Black
Contacts:	Phosphor bronze hard temper with gold thickness options (6µ", 15µ", 30µ", 50µ") over 50µ" min. nickel on contact mating area; 100µ" min. matte tin plating on solder tails
Shield:	Stainless steel with tin dipped tails
LED:	Tin plating on LED tail

Mechanical

Insertion Force:	5 lbs max.
Pull Retention Force:	20 lbs min.
Durability:	750 mating & unmating cycles
Recommended Soldering Temperature:	Wave soldering peaked at 260°C for 5 secs max.
Operating Temperature:	-55°C to + 85°C
UL file #:	E135615

Note: IR Reflow compatible; Consult factory for details

Electrical

Contact Resistance:	20 mΩ max.
Insulation resistance:	500 MΩ min. at 500V DC for 2 mins max.
Current Rating:	1.25 Amps per contact
Voltage Rating:	125 Volts AC
DWV:	1000 VAC, 60 Hz. 1 min.
LED Forward DC Current:	20mA typical
LED Forward Voltage:	1.9 Volts max. at 2mA (for single colours) 2.6 Volts max. at 20mA (for bicolours)
LED Reverse Voltage:	5 Volts min.
LED Light Intensity:	0.4 to 1.5 mcd min. at 2mA (for single colours) 0.5 mcd min. at 2mA (for bicolours)
LED Wave Length:	Yellow: 587 ± 7 nm measured at 20mA Green: 565 ± 6 nm measured at 20mA Red: 625 ± 5 nm measured at 20mA

ORDERING INFORMATION

RJE72 - X 8 8 - 1 X X X - X

Number of Ports
- 1 - 1 Port
- 4 - 4 Ports

Number of Positions
- 8 - 8 Positions

Number of Contacts
- 8 - 8 Contacts

Shield Options
- 1 - Full shield with top and side tabs

Packaging
- Blank - Tray
- T - Tape & Reel

Modifier
- 1 - 0.125" (3.18mm)
- 2 - 0.089" (2.27mm)
- 3 - 0.085" (2.16mm)

LED Options
- Click to view page 3 for options

Contact Plating
- 1 - 6µ" gold plating
- 2 - 15µ" gold plating
- 3 - 30µ" gold plating
- 4 - 50µ" gold plating

Didn't find what you were looking for?
Please contact sales@amphenolcanada.com and let us know what you need.

Click to Return to Table of Contents

RJE72

CAT 5e, RIGHT ANGLE, RECESSED, LOW PROFILE WITH LEDs

Single Port

RJE72-188-14X1

Shielded

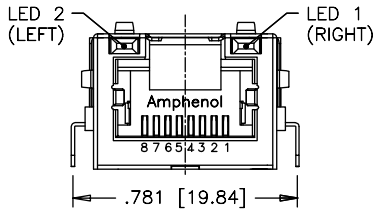

FRONT VIEW

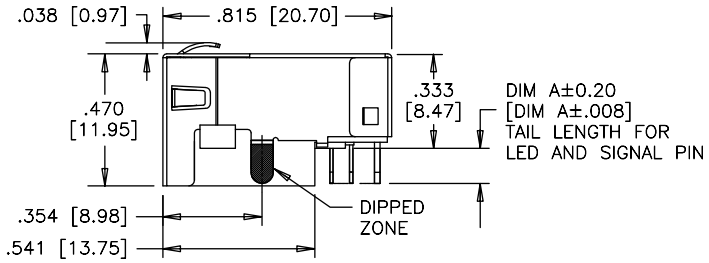

SIDE VIEW

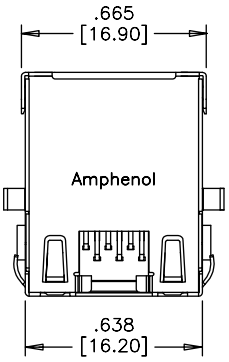

TOP VIEW

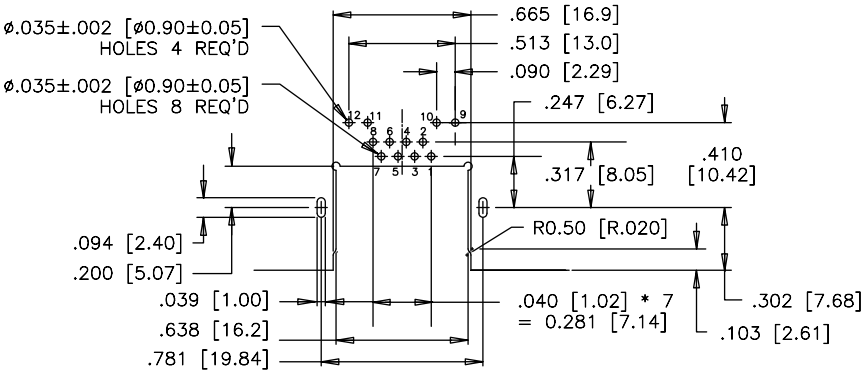

RECOMMENDED PCB LAYOUT

Multi Port

RJE72-488-14X1

Shielded

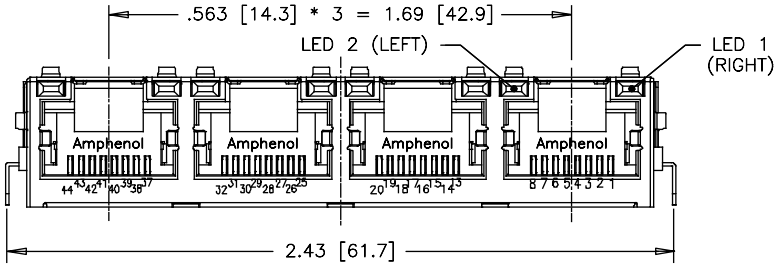

FRONT VIEW

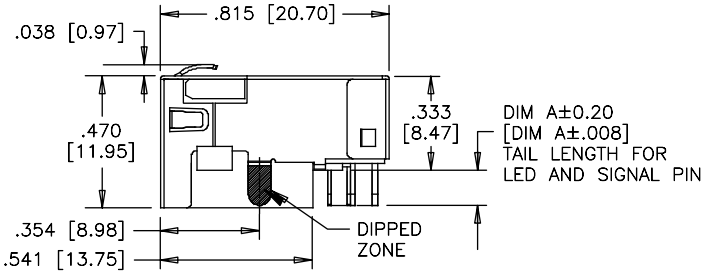

SIDE VIEW

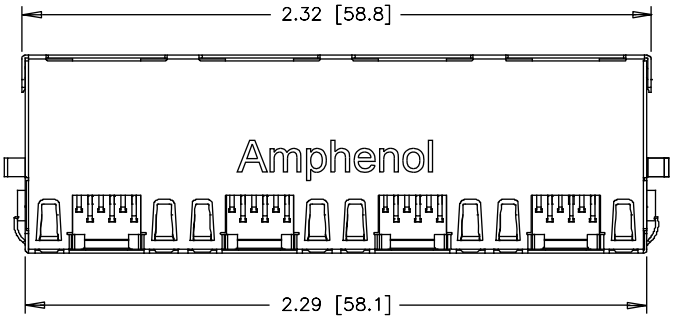

TOP VIEW

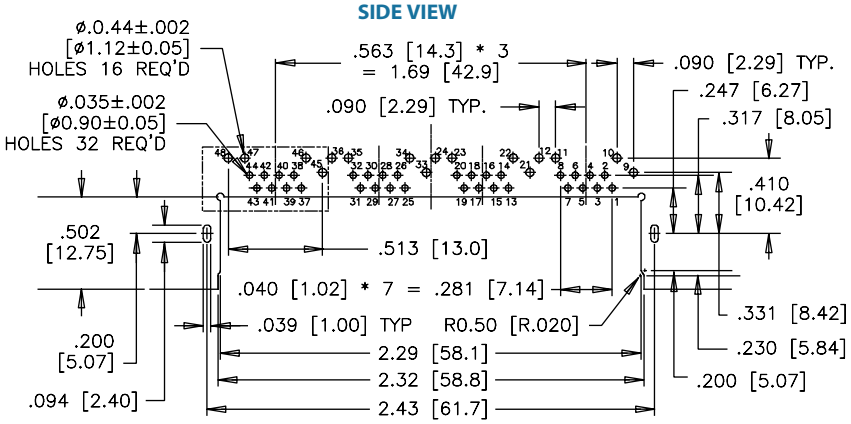

RECOMMENDED PCB LAYOUT

RJSGE

CAT 5e, 2 OVER 2 PORTS, PRESS FIT, WITH LEDs

2 OVER 2 PORTS, PRESS FIT, WITH LEDs

The RJSGE series of modular jacks meet CAT 5e performance per EIA-568-C.2. It supports Gigabit Ethernet Protocols. Shielding available for increased EMI performance and LEDs for Link Activity and Network Speed verification.

SPECIFICATIONS

Material

Insulator:	Engineering thermoplastic; Complies with UL 94V-0; Black
Contacts:	Phosphor bronze hard temper with gold thickness options (6µ", 15µ", 30µ", 50µ") over 50µ" min. nickel on contact mating area; 100µ" min. matte tin plating on solder tails
Shield:	Stainless steal with press-fit tails
LED:	Press-fit with tin plating on LED tails

Mechanical

Insertion Force:	5 lbs max.
Pull Retention Force:	20 lbs min.
Durability:	750 mating & unmating cycles
Recommended Soldering Temperature:	Wave soldering peaked at 260°C for 5 secs max.
Operating Temperature:	-55°C to + 85°C
UL File Number:	E135615

Note: IR Reflow compatible; Consult factory for details

Electrical

Contact Resistance:	20 mΩ max.
Insulation resistance:	500 MΩ min. at 500V DC for 2 mins max.
Current Rating:	1.25 Amps per contact
Voltage Rating:	125 Volts AC
DWV:	1000 VAC, 60 Hz. 1 min.
LED Forward DC Current:	20mA typical
LED Forward Voltage:	1.9 Volts max. at 2mA (for single colours) 2.6 Volts max. at 20mA (for bicolours)
LED Reverse Voltage:	5 Volts max.
LED Light Intensity:	0.4 to 1.5 mcd min. at 2mA (for single colours) 0.5 mcd min. at 2mA (for bicolours)
LED Wave Length:	Yellow: 587 ± 7 nm measured at 20mA Green: 570 ± 5 nm measured at 20mA Red: 625 ± 5 nm measured at 20mA

ORDERING INFORMATION

RJSGE - 4 8 8 - X X X 1 - X

Number of Ports
4 - 2 over 2 Port

Number of Positions
8 - 8 Positions

Number of Contacts
8 - 8 Contacts

Shield Options
6 - Full shield without EMI tabs
7 - Full shield with EMI tabs

Packaging
Blank - Tray
T - Tape & Reel

Modifier
1 - Standard, black housing, 0.130" contact and LED tail length

LED Options
Click to view page 3 for options

Contact Plating
1 - 6µ" gold plating
2 - 15µ" gold plating
3 - 30µ" gold plating
4 - 50µ" gold plating

Didn't find what you were looking for?
Please contact sales@amphenolcanada.com and let us know what you need.

Click to return to Table of Contents

Amphenol Commercial Products - Amphenol Canada Corp. | Telephone: (416) 291-4401 | Fax: (416) 754-8668 | Email: sales@amphenolcanada.com
All specifications are subject to change without notice. Catalogue is updated regularly. Please refer to www.amphenolcanada.com for the most recent edition.

RJSGE

CAT 5e, 2 OVER 2 PORTS, PRESS FIT, WITH LEDs

Four Port

RJSGE-488-6XX1

Shielded - with no EMI Tabs

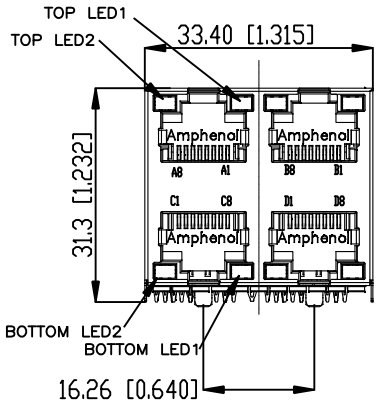

FRONT VIEW

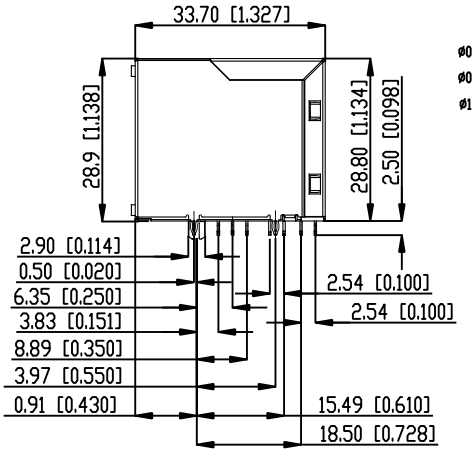

SIDE VIEW

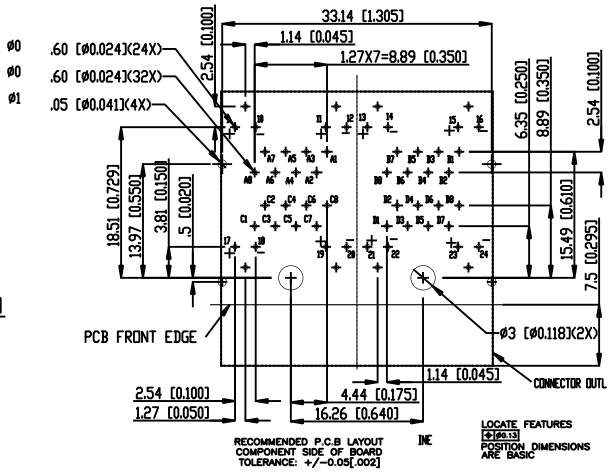

RECOMMENDED PCB LAYOUT

Measurements: mm [Inches]

Shielded - with EMI Tabs

RJSGE-488-7XX1

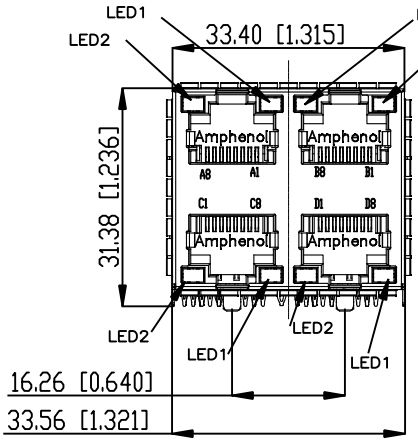

FRONT VIEW

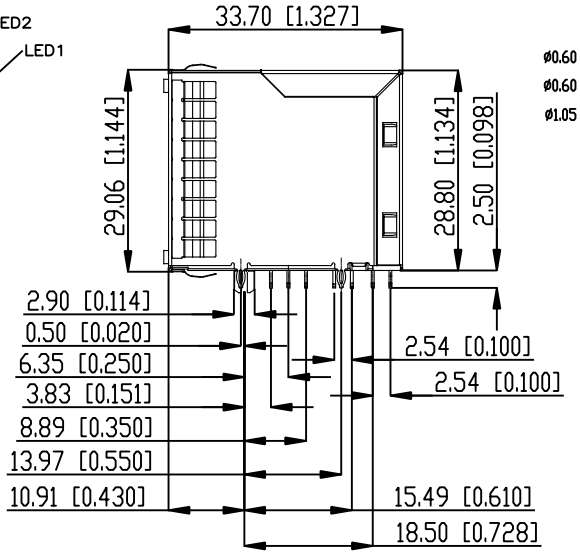

SIDE VIEW

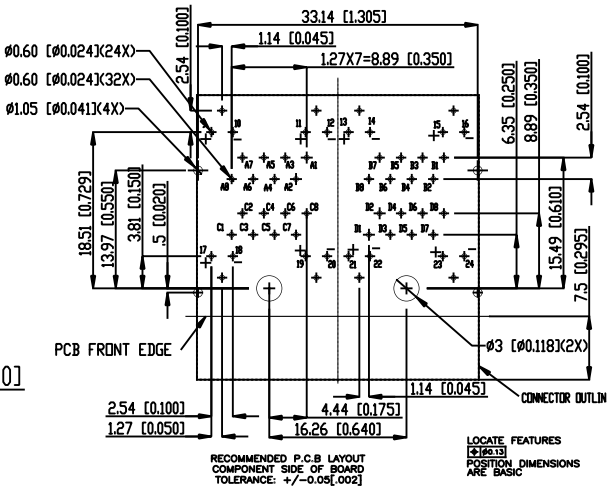

RECOMMENDED PCB LAYOUT

Measurements: mm [Inches]

RJE45

CAT 6, SINGLE PORT, LOW PROFILE, WITH LEDs

SINGLE PORT, LOW PROFILE, WITH LEDs

The RJE45 series of modular jacks meet CAT 6 performance per EIA-568-C.2. It supports Gigabit Ethernet Protocols and 10 Gig links in applications up to 50m. Shielding available for increased EMI performance and LEDs for link activity and network speed verification.

SPECIFICATIONS

Material

Insulator:	High temp. thermoplastic; Complies with UL 94V-0; Black
Contacts:	Phosphor bronze hard temper with gold thickness options (6µ", 15µ", 30µ", 50µ") over 50µ" min. nickel on contact mating area; 100µ" min. matte tin plating on solder tails
Shield:	Stainless steel with tin dipped tails
LED:	Tin plating on LED tail

Mechanical

Insertion Force:	5 lbs max.
Pull Retention Force:	20 lbs min.
Durability:	750 mating & unmating cycles
Recommended Soldering Temperature:	Wave soldering peaked at 260°C for 5 secs max. or lead free reflow soldering up to 260°C for 10 secs for one cycle with an LED defect rate of no more than 1000ppm
Operating Temperature:	-55°C to + 85°C
UL File Number:	E135615

Electrical

Contact Resistance:	20 mΩ max.
Insulation resistance:	500 MΩ min. at 500V DC for 2 mins max.
Current Rating:	1.25 Amps per contact
Voltage Rating:	125 Volts AC
DWV:	1000 VAC, 60 Hz. 1 min.
LED Forward DC Current:	20mA typical
LED Forward Voltage:	1.9 Volts max. at 2mA
LED Reverse Voltage:	5 Volts min.
LED Light Intensity:	0.4 to 1.5 mcd min. at 2mA
LED Wave Length:	Yellow: 587 ± 7 nm measured at 20mA Green: 565 ± 6 nm measured at 20mA Red: 625 ± 5 nm measured at 20mA

Note: Multiple exposures not recommended

ORDERING INFORMATION

RJE45 - 1 8 8 - X X X X - X

Number of Ports
1 - 1 Port

Number of Positions
8 - 8 Positions

Number of Contacts
8 - 8 Contacts

Shield Options
0 - No shield
1 - Full shield with top and bottom EMI tabs
2 - Full shield without EMI tabs, back PCB tabs
4 - Full shield without EMI tabs, front PCB tabs

Packaging
Blank - Tray
T - Tape & Reel

Modifier
1 - Standard, black housing, 0.130" contact and LED tail length
2 - Black housing, with flange, 0.130" contact and LED tail length

LED Options
Click to view page 3 for options

Contact Plating
1 - 6µ" gold plating
2 - 15µ" gold plating
3 - 30µ" gold plating
4 - 50µ" gold plating

Didn't find what you were looking for?
Please contact sales@amphenolcanada.com and let us know what you need.

RJE45

CAT 6, SINGLE PORT, LOW PROFILE, WITH LEDs

Single Port

Non-Shielded

RJE45-188-0X01

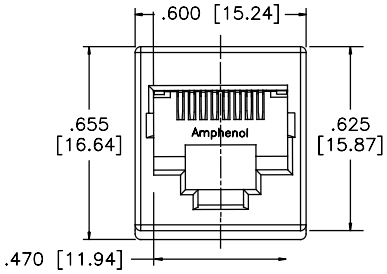

TOP VIEW

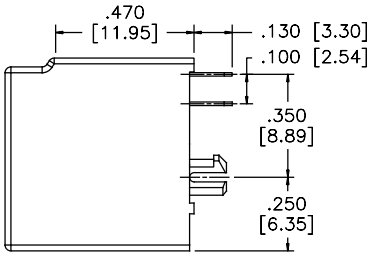

SIDE VIEW

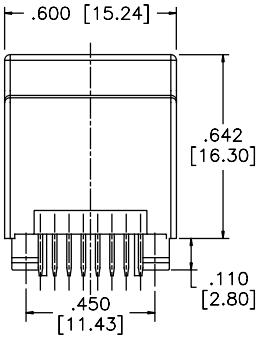

BACK VIEW

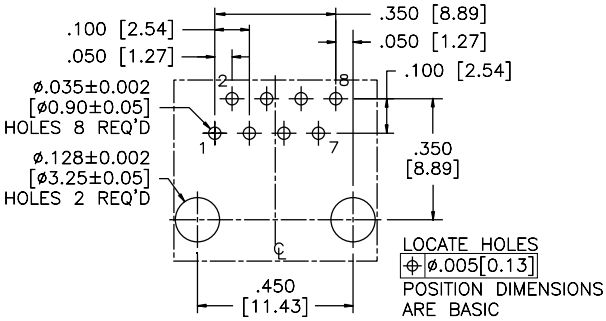

RECOMMENDED PCB LAYOUT

Shielded

RJE45-188-1XX1

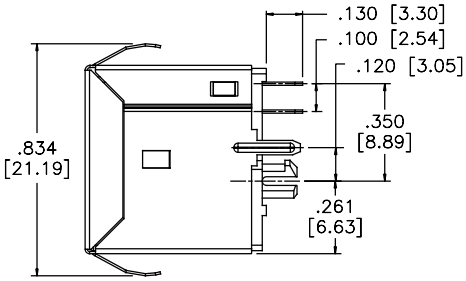

SIDE VIEW

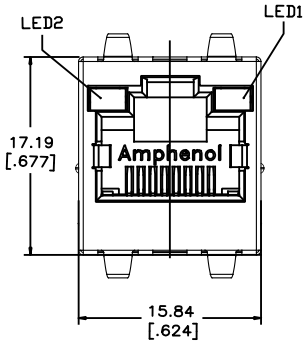

TOP VIEW

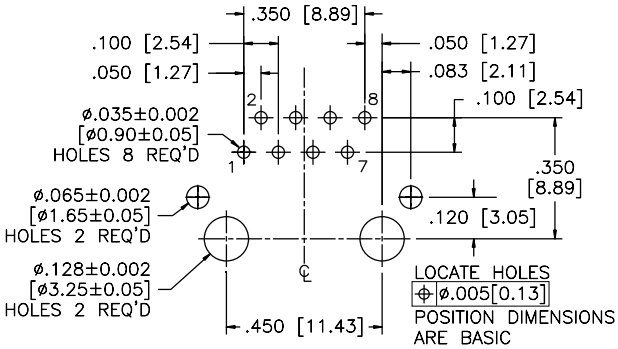

RECOMMENDED PCB LAYOUT

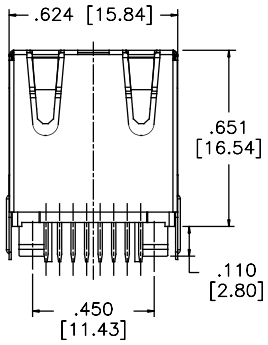

BACK VIEW

Click to Return to Table of Contents

RJE49

CAT 6, RIGHT ANGLE, LOW PROFILE, WITH LEDs

RIGHT ANGLE, LOW PROFILE, WITH LEDs

The RJE49 series of modular jacks meet CAT 6 performance per EIA-568-C.2. It supports Gigabit Ethernet Protocols. Shielding is available for increased EMI performance and LEDs for link activity and network verification.

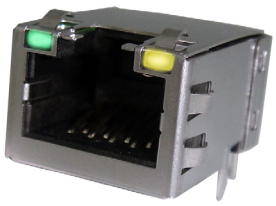

SPECIFICATIONS

Material

Insulator:	High temp. thermoplastic; Complies with UL 94V-0; Black
Contacts:	Phosphor bronze hard temper with gold thickness options (6µ", 15µ", 30µ", 50µ") over 50µ" min. nickel on contact mating area; 100µ" min. matte tin plating on solder tails
Shield:	Stainless steel with tin dipped tails
LED:	Tin plating on LED tail

Mechanical

Insertion Force:	5 lbs max.
Pull Retention Force:	20 lbs min.
Durability:	750 mating & unmating cycles
Recommended Soldering Temperature:	Wave soldering peaked at 260°C for 5 secs max.
Operating Temperature:	-55°C to + 85°C
UL File Number:	E135615

Electrical

Contact Resistance:	20 mΩ max.
Insulation resistance:	500 MΩ min. at 500V DC for 2 mins max.
Current Rating:	1.25 Amps per contact
Voltage Rating:	125 Volts AC
DWV:	1000 VAC, 60 Hz. 1 min.
LED Forward DC Current:	20mA typical
LED Forward Voltage:	1.9 Volts max. at 2mA (for single colours) 2.6 Volts max. at 20mA (for bicolours)
LED Reverse Voltage:	5 Volts min.
LED Light Intensity:	0.4 to 1.5 mcd min. at 2mA (for single colours) 0.5 mcd min. at 2mA (for bicolours)
LED Wave Length:	Yellow: 587 ± 7 nm measured at 20mA Green: 565 ± 6 nm measured at 20mA Red: 625 ± 5 nm measured at 20mA

ORDERING INFORMATION

RJE49 - 1 8 8 - X X X 1 - X

Number of Ports
1 - 1 Port

Number of Positions
8 - 8 Positions

Number of Contacts
8 - 8 Contacts

Shield Options
0 - No shield
1 - Full shield with top and side tabs
3 - Full shield with top tabs only

Packaging
Blank - Tray
T - Tape & Reel

Modifier
1 - 3.00mm tail length

LED Options
Click to view page 3 for options

Contact Plating
1 - 6µ" gold plating
2 - 15µ" gold plating
3 - 30µ" gold plating
4 - 50µ" gold plating

Didn't find what you were looking for?
Please contact sales@amphenolcanada.com and let us know what you need.

Click to Return to Table of Contents

RJE49

CAT 6, RIGHT ANGLE, LOW PROFILE, WITH LEDs

Single Port

RJE49-188-1XX1

Shielded

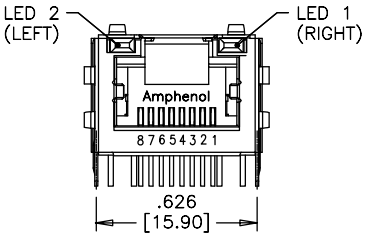

FRONT VIEW

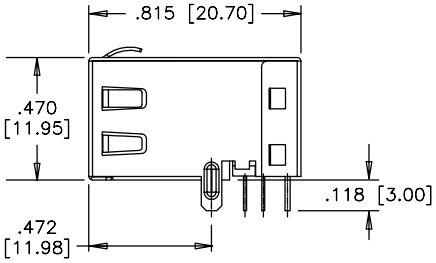

SIDE VIEW

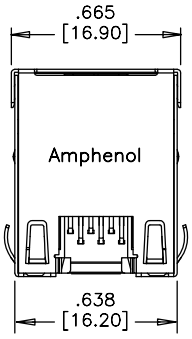

TOP VIEW

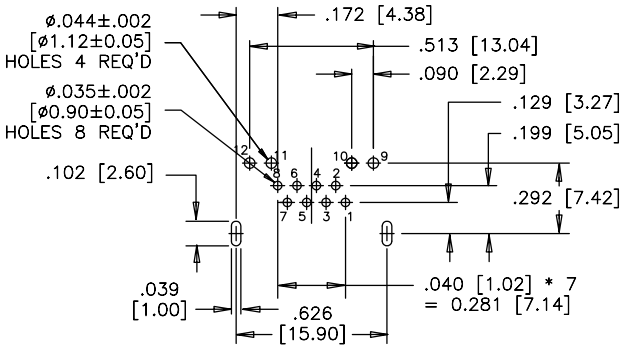

RECOMMENDED PCB LAYOUT

Notes

RJE59

CAT 6, RIGHT ANGLE, STANDARD PROFILE, WITH LEDs

RIGHT ANGLE, STANDARD PROFILE, WITH LEDs

The RJE59 series of modular jacks meet CAT 6 performance per EIA-568-C.2. It supports Gigabit Ethernet Protocols. Shielding is available for increased EMI performance and LEDs for link activity and network speed verification.

SPECIFICATIONS

Material

Insulator:	High temp. thermoplastic; Complies with UL 94V-0; Black
Contacts:	Phosphor bronze hard temper with gold thickness options (6µ", 15µ", 30µ", 50µ") over 50µ" min. nickel on contact mating area; 100µ" min. matte tin plating on solder tails
Shield:	Stainless steel with tin dipped tails
LED:	Tin plating on LED tail

Mechanical

Insertion Force:	5 lbs max.
Pull Retention Force:	20 lbs min.
Durability:	750 mating & unmating cycles
Recommended Soldering Temperature:	Wave soldering peaked at 260°C for 10 secs max. for one cycle with an LED defect rate of no more than 100ppm
Operating Temperature:	-55°C to + 85°C
UL File Number:	E135615

Note: multiple exposures not recommended; IR Reflow compatible version also available; Consult factory for details

Electrical

Contact Resistance:	20 mΩ max.
Insulation resistance:	500 MΩ min. at 500V DC for 2 mins max.
Current Rating:	1.25 Amps per contact
Voltage Rating:	125 Volts AC
DWV:	1000 VAC, 60 Hz. 1 min.
LED Forward DC Current:	20mA typical
LED Forward Voltage:	1.9 Volts max. at 2mA (for single colours) 2.6 Volts max. at 20mA (for bicolours)
LED Reverse Voltage:	5 Volts min.
LED Light Intensity:	0.4 to 1.5 mcd min. at 2mA (for single colours) 0.5 mcd min. at 2mA (for bicolours)
LED Wave Length:	Yellow: 587 ± 7 nm measured at 20mA Green: 565 ± 6 nm measured at 20mA Red: 625 ± 5 nm measured at 20mA

ORDERING INFORMATION

RJE59 - 1 8 8 - X X X X - X

Number of Ports
1 - 1 Port

Number of Positions
8 - 8 Positions

Number of Contacts
8 - 8 Contacts

Shield Options
3 - Full shield with top tabs
5 - Full shield with top and side tabs
6 - Full shield without tabs

Packaging
Blank - Tray
T - Tape & Reel

Modifier
1 - Standard with boardlocks
2 - Without boardlocks

LED Options
Click to view page 3 for options

Contact Plating
1 - 6µ" gold plating
2 - 15µ" gold plating
3 - 30µ" gold plating
4 - 50µ" gold plating

Didn't find what you were looking for?
Please contact sales@amphenolcanada.com and let us know what you need.

Amphenol Commercial Products - Amphenol Canada Corp. | **Telephone: (416) 291-4401** | **Fax: (416) 754-8668** | **Email:** sales@amphenolcanada.com
All specifications are subject to change without notice. Catalogue is updated regularly. Please refer to www.amphenolcanada.com for the most recent edition.

RJE59

CAT 6, RIGHT ANGLE, STANDARD PROFILE, WITH LEDs

Single Port

Shielded - Option 3

RJE59-188-3XX1

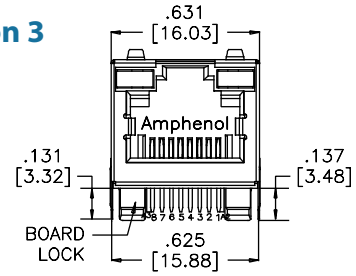

FRONT VIEW

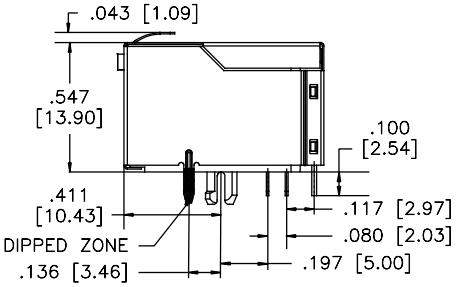

SIDE VIEW

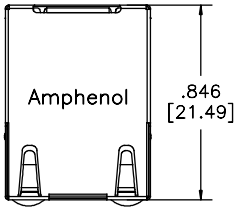

TOP VIEW

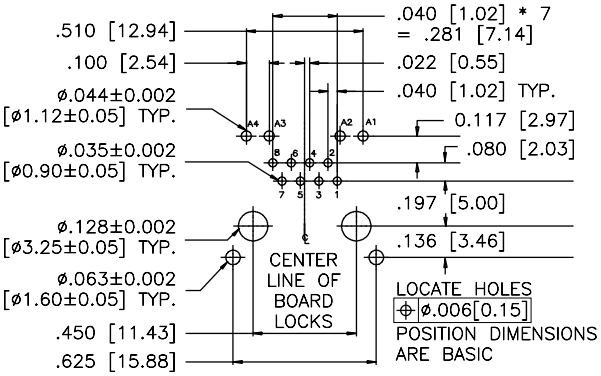

RECOMMENDED PCB LAYOUT

Shielded - Option 5

RJE59-188-5XX1

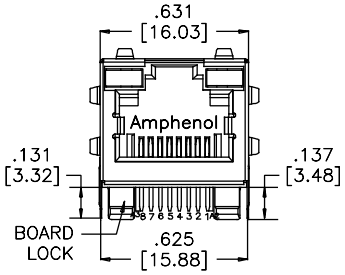

FRONT VIEW

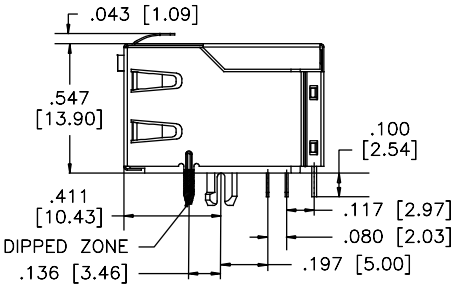

SIDE VIEW

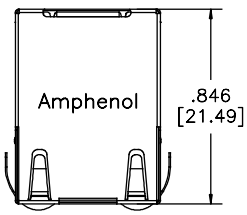

TOP VIEW

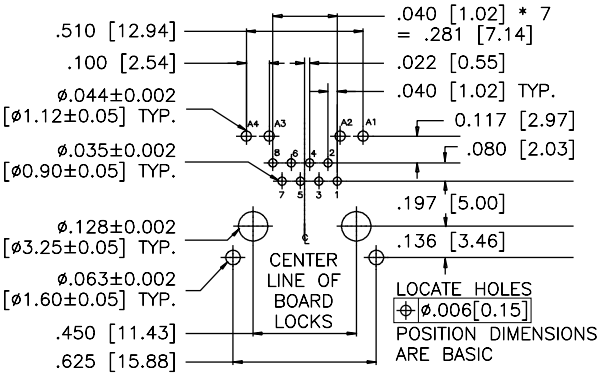

RECOMMENDED PCB LAYOUT

RJE59

CAT 6, RIGHT ANGLE, STANDARD PROFILE, WITH LEDs

Single Port

RJE59-188-6XX1

Shielded - Option 6

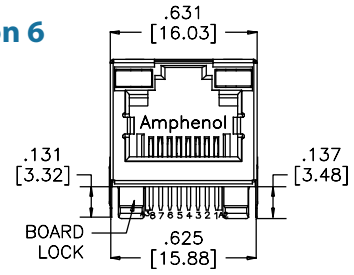

FRONT VIEW

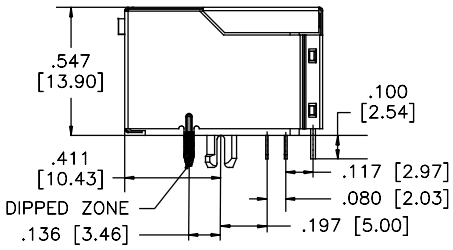

SIDE VIEW

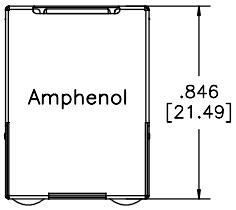

TOP VIEW

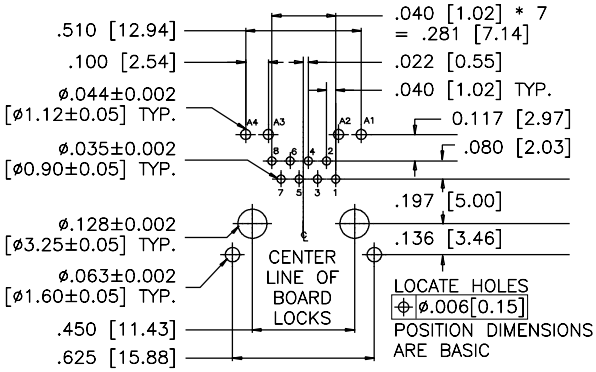

RECOMMENDED PCB LAYOUT

Notes

Amphenol Commercial Products - Amphenol Canada Corp. | **Telephone: (416) 291-4401** | **Fax: (416) 754-8668** | **Email:** sales@amphenolcanada.com
All specifications are subject to change without notice. Catalogue is updated regularly. Please refer to www.amphenolcanada.com for the most recent edition.

RJE71

CAT 6, RIGHT ANGLE, RECESSED, LOW PROFILE, WITH LEDs

RIGHT ANGLED, RECESSED, LOW PROFILE, WITH LEDs

The RJE71 series of modular jacks meet CAT 6 performance per EIA-568-C.2. It supports Gigabit Ethernet Protocols. Shielding available for increased EMI performance and LEDs for link activity and network speed verification.

SPECIFICATIONS

Material

Insulator:	High temp. thermoplastic; Complies with UL 94V-0; Black
Contacts:	Phosphor bronze hard temper with gold thickness options (6µ", 15µ", 30µ", 50µ") over 50µ" min. nickel on contact mating area; 100µ" min. matte tin plating on solder tails
Shield:	Stainless steel with tin dipped tails
LED:	Tin plating on LED tail

Mechanical

Insertion Force:	5 lbs max.
Pull Retention Force:	20 lbs min.
Durability:	750 mating & unmating cycles
Recommended Soldering Temperature:	Wave soldering peaked at 260°C for 5 secs max.
Operating Temperature:	-55°C to + 85°C
UL File:	E135615

Note: IR Reflow compatible version also available; Consult factory for details

Electrical

Contact Resistance:	20 mΩ max.
Insulation resistance:	500 MΩ min. at 500V DC for 2 mins max.
Current Rating:	1.25 Amps per contact
Voltage Rating:	125 Volts AC
DWV:	1000 VAC, 60 Hz. 1 min.
LED Forward DC Current:	20mA typical
LED Forward Voltage:	1.9 Volts max. at 2mA (for single colours) 2.6 Volts max. at 20mA (for bicolours)
LED Reverse Voltage:	5 Volts min.
LED Light Intensity:	0.4 to 1.5 mcd min. at 2mA (for single colours) 0.5 mcd min. at 2mA (for bicolours)
LED Wave Length:	Yellow: 587 ± 7 nm measured at 20mA Green: 565 ± 6 nm measured at 20mA Red: 625 ± 5 nm measured at 20mA

ORDERING INFORMATION

RJE71 - X 8 8 - 1 X X X - X

Number of Ports
- 1 - 1 Port
- 4 - 4 Ports

Number of Positions
- 8 - 8 Positions

Number of Contacts
- 8 - 8 Contacts

Shield Options
- 1 - Full shield with top and side tabs

Packaging
- Blank - Tray
- T - Tape & Reel

Modifier
- 1 - 0.125" (3.18mm)
- 2 - 0.089" (2.27mm)
- 3 - 0.085" (2.16mm)

LED Options
- Click to view page 3 for options

Contact Plating
- 1 - 6µ" gold plating
- 2 - 15µ" gold plating
- 3 - 30µ" gold plating
- 4 - 50µ" gold plating

Didn't find what you were looking for?
Please contact sales@amphenolcanada.com and let us know what you need.

Click to Return to Table of Contents

RJE71

CAT 6, RIGHT ANGLE, RECESSED, LOW PROFILE, WITH LEDs

Single Port

RJE71-188-1XXX

Shielded

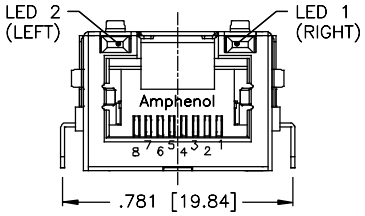

FRONT VIEW

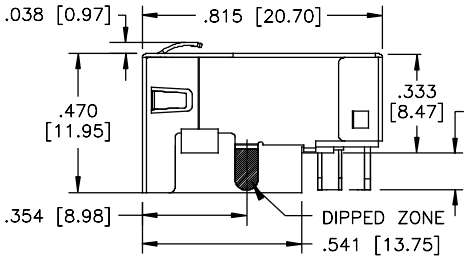

Part Number	DIM A
RJE71–188–1XX1	0.125 [3.18]
RJE71–188–1XX2	0.089 [2.27]
RJE71–188–1XX3	0.085 [2.16]

SIDE VIEW

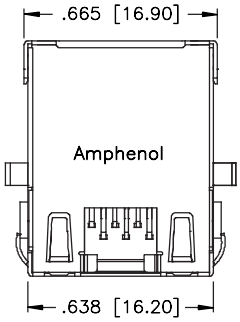

TOP VIEW

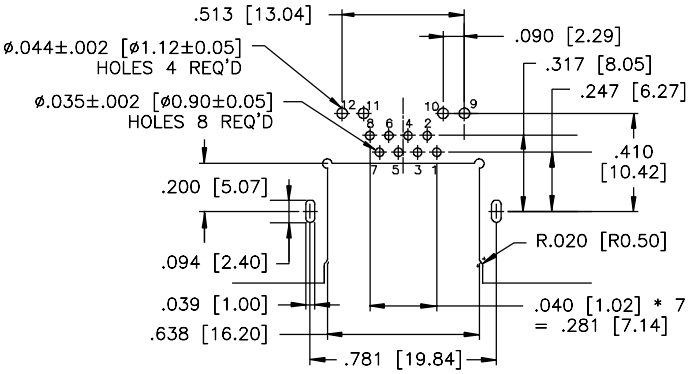

RECOMMENDED PCB LAYOUT

Multi Port

RJE71-488-1XX1

Shielded

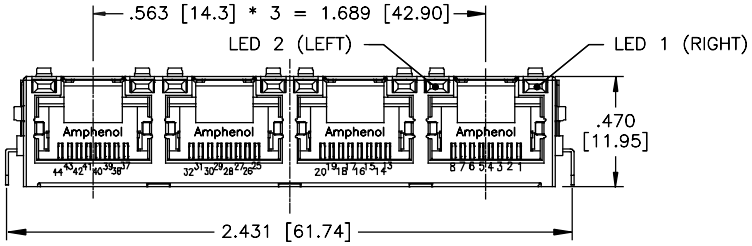

FRONT VIEW

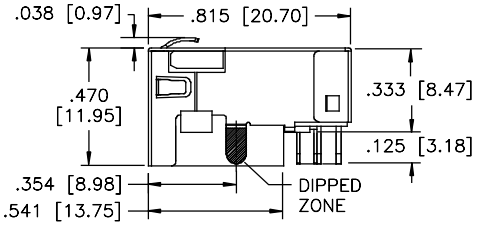

SIDE VIEW

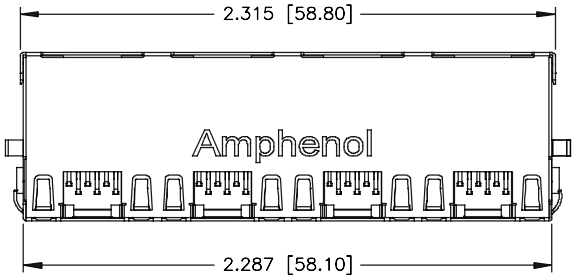

TOP VIEW

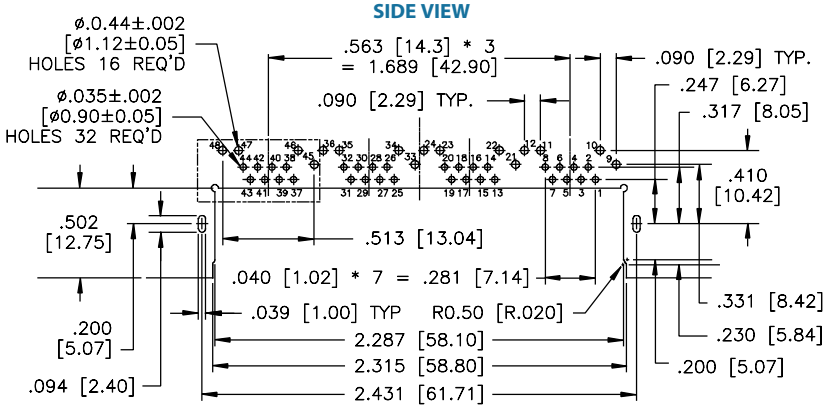

RECOMMENDED PCB LAYOUT

Didn't find what you were looking for?
Please contact sales@amphenolcanada.com and let us know what you need.

Amphenol Commercial Products - Amphenol Canada Corp. | **Telephone: (416) 291-4401** | **Fax: (416) 754-8668** | **Email:** sales@amphenolcanada.com
All specifications are subject to change without notice. Catalogue is updated regularly. Please refer to www.amphenolcanada.com for the most recent edition.

RJE1R

CAT 5e/CAT 6, 1 OVER 1 PORT WITH LEDs

CAT 5e, CAT 6, 1 OVER 1 PORT WITH LEDs

The RJE1R series is a unique 2x1 stacked connector. Two 8P8C ports with the option to choose from three different performances levels for each individual port: Cat5 equivalent, Cat5e, or Cat6. Each port will meet their designated performance as per EIA-568-C.2. Shielding available for increased EMI performance and LEDs for link activity and network speed verification.

SPECIFICATIONS

Material

Insulator:	High temp. thermoplastic; Complies with UL 94V-0; Black
Contacts:	Phosphor bronze hard temper with gold thickness options (6µ", 15µ", 30µ", 50µ") over 50µ" min. nickel on contact mating area; 100µ" min. matte tin plating on solder tails
Shield:	Stainless steel with tin dipped tails
LED:	Tin plating on LED tails

Mechanical

Insertion Force:	5 lbs max.
Pull Retention Force:	20 lbs min.
Durability:	750 mating & unmating cycles
Recommended Soldering Temperature:	IR reflow peaked at 260°C for 5 to 8 secs.
Operating Temperature:	-55°C to + 85°C

Electrical

Contact Resistance:	20 mΩ max.
Insulation resistance:	500 MΩ min. at 500V DC for 2 mins max.
Current Rating:	1.25 Amps per contact
Voltage Rating:	125 Volts AC
DWV:	1000 VAC, 60 Hz. 1 min.
LED Forward DC Current:	20mA typical
LED Forward Voltage:	1.9 Volts max. at 2mA (for single colours) 2.6 Volts max. at 20mA (for bicolours)
LED Reverse Voltage:	5 Volts min.
LED Light Intensity:	0.4 to 1.5 mcd min. at 2mA (for single colours) 0.5 mcd min. at 2mA (for bicolours)
LED Wave Length:	Yellow: 587 ± 7 nm measured at 20mA Green: 565 ± 6 nm measured at 20mA Red: 625 ± 5 nm measured at 20mA
UL File Number:	E135615

Note: IR Reflow is not recommended for connectors with LEDs

ORDERING INFORMATION

RJE1R - 2 8 8 - X X X X - X X

Number of Ports
2 - 1 over 1 ports

Number of Contacts (Top)
8 - 8 Contacts

Number of Contacts (Bottom)
8 - 8 Contacts

Top Port Category Options
1 - CAT 5
2 - CAT 5e
3 - CAT 6

Bottom Port Category Options
1 - CAT 5
2 - CAT 5e
3 - CAT 6

Contact Tail Length
1 - 3.60mm
2 - 3.20mm
3 - 2.80mm

LED Options
Click to view page 3 for options

Contact Plating
1 - 6µ" gold plating
2 - 15µ" gold plating
3 - 30µ" gold plating
4 - 50µ" gold plating

Shield Options
0 - No Shield
3 - Full shield with top tabs only
5 - Full shield with top and side tabs
6 - Full shield with no tabs

RJE1R

CAT 5e/CAT 6, 1 OVER 1 PORT WITH LEDs

One Over One Port

RJE1R-288-XX3X-XX

Shielded

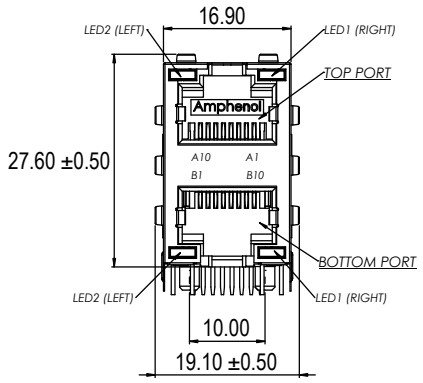

FRONT VIEW

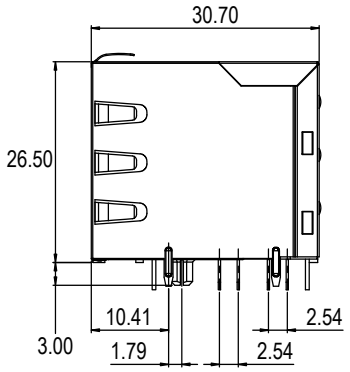

SIDE VIEW

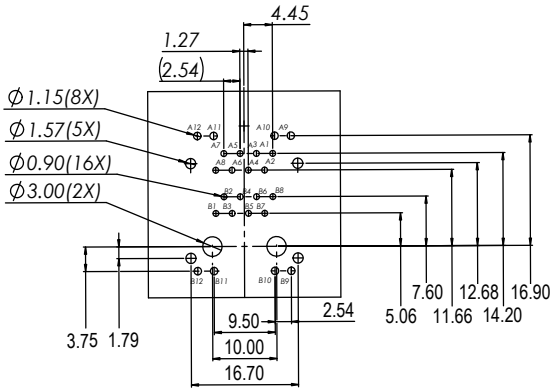

RECOMMENDED PCB LAYOUT

Measurements: mm

Notes

Didn't find what you were looking for?
Please contact sales@amphenolcanada.com and let us know what you need.

Amphenol Commercial Products - Amphenol Canada Corp. | **Telephone: (416) 291-4401** | **Fax: (416) 754-8668** | **Email:** sales@amphenolcanada.com
All specifications are subject to change without notice. Catalogue is updated regularly. Please refer to www.amphenolcanada.com for the most recent edition.

RJE4A

CAT 6A, SINGLE PORT, LOW PROFILE, WITH LEDs

VERTICAL, LOW PROFILE, WITH LEDs

The RJE4A series of modular jacks meet CAT 6A performance per EIA-568-C.2. It supports Gigabit Ethernet Protocols. Shielding available for increased EMI performance and LEDs for link activity and network speed verification.

SPECIFICATIONS

Material

Insulator:	High temp. thermoplastic; Complies with UL 94V-0; Black
Contacts:	Phosphor bronze hard temper with gold thickness options (6µ", 15µ", 30µ", 50µ") over 50µ" min. nickel on contact mating area; 100µ" min. matte tin plating on solder tails
Shield:	Stainless steel with tin dipped tails
LED:	Tin plating on LED tail

Mechanical

Insertion Force:	5 lbs max.
Pull Retention Force:	20 lbs min.
Durability:	750 mating & unmating cycles
Recommended Soldering Temperature:	Wave soldering peaked at 260°C for 5 secs max. or lead free reflow soldering up to 260°C for 10 secs for one cycle with an LED defect rate of no more than 1000ppm
Operating Temperature:	-55°C to + 85°C
UL File Number:	E135615

Note: Multiple exposures not recommended

Electrical

Contact Resistance:	20 mΩ max.
Insulation resistance:	500 MΩ min. at 500V DC for 2 mins max.
Current Rating:	1.25 Amps per contact
Voltage Rating:	125 Volts AC
DWV:	1000 VAC, 60 Hz. 1 min.
LED Forward DC Current:	20mA typical
LED Forward Voltage:	1.9 Volts max. at 2mA (for single colours) 2.6 Volts max. at 20mA (for bicolours)
LED Reverse Voltage:	5 Volts min.
LED Light Intensity:	0.4 to 1.5 mcd min. at 2mA (for single colours) 0.5 mcd min. at 2mA (for bicolours)
LED Wave Length:	Yellow: 587 ± 7 nm measured at 20mA Green: 565 ± 6 nm measured at 20mA Red: 625 ± 5 nm measured at 20mA

ORDERING INFORMATION

RJE4A - 1 8 8 - X X X 1 - X

Number of Ports
1 - 1 Port

Number of Positions
8 - 8 Positions

Number of Contacts
8 - 8 Contacts

Shield Options
0 - No shield
1 - Full shield with top and bottom EMI tabs
2 - Full shield without EMI tabs, back PCB tabs
4 - Full shield without EMI tabs, front PCB tabs

Packaging
Blank - Tray
T - Tape & Reel

Modifier
1 - Standard, black housing, 0.130" contact and LED tail length

LED Options
Click to view page 3 for options

Contact Plating
1 - 6µ" gold plating
2 - 15µ" gold plating
3 - 30µ" gold plating
4 - 50µ" gold plating

Click to Return to Table of Contents

RJE4A

CAT 6A, SINGLE PORT, LOW PROFILE, WITH LEDs

Single Port

Non-Shielded

RJE4A-188-0X01

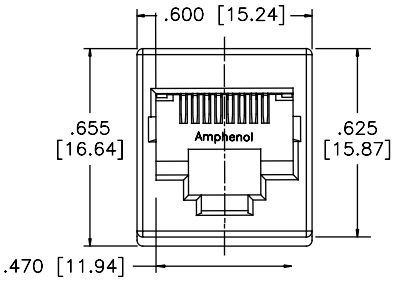

TOP VIEW

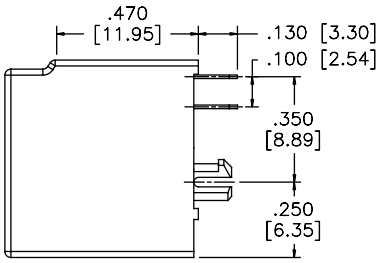

SIDE VIEW

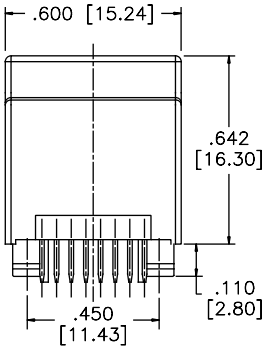

BACK VIEW

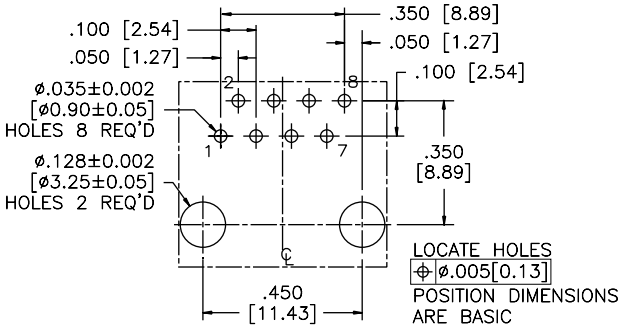

RECOMMENDED PCB LAYOUT

Shielded

RJE4A-188-XXX1

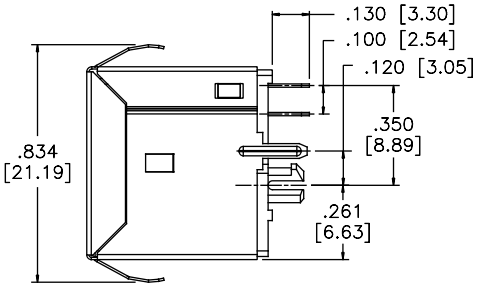

SIDE VIEW

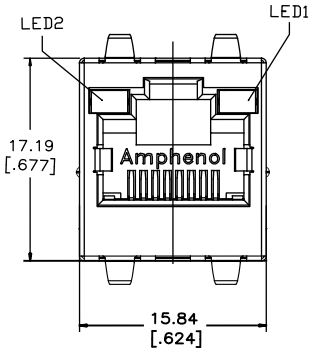

TOP VIEW

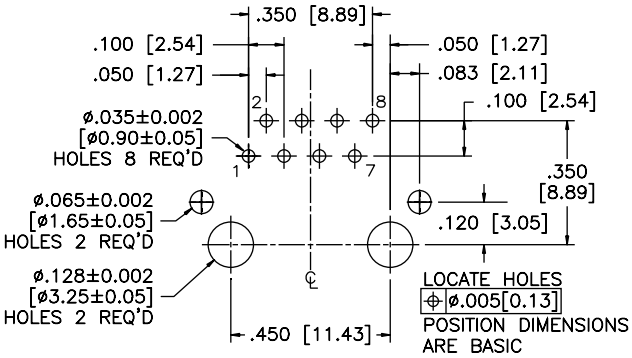

RECOMMENDED PCB LAYOUT

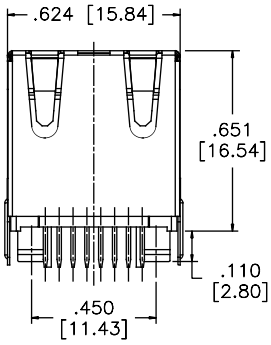

BACK VIEW

Amphenol Commercial Products - Amphenol Canada Corp. | Telephone: (416) 291-4401 | Fax: (416) 754-8668 | Email: sales@amphenolcanada.com
All specifications are subject to change without notice. Catalogue is updated regularly. Please refer to www.amphenolcanada.com for the most recent edition.

RJE7B

CAT 6A, RIGHT ANGLE, STANDARD PROFILE, WITH LEDs

RIGHT ANGLED, STANDARD PROFILE, WITH LEDs

The RJE7B series of modular jacks meet CAT 6A performance per EIA-568-C.2. It supports Gigabit Ethernet Protocols and 10G Ethernet over lengths of up to 100m. Shielding available for increased EMI performance and LEDs for link activity and network speed verification.

SPECIFICATIONS

Material

Insulator:	High temp. thermoplastic; Complies with UL 94V-0; Black colour
Contacts:	Phosphor bronze hard temper with gold thickness options (6µ", 15µ", 30µ", 50µ") over 50µ" min. nickel on contact mating area; 100µ" min. matte tin plating on solder tails
Shield:	Stainless steel with tin dipped tails
LED:	Tin plating on LED tails

Mechanical

Insertion Force:	5 lbs max.
Pull Retention Force:	20 lbs min.
Durability:	750 mating & unmating cycles
Recommended Soldering Temperature:	IR reflow peaked at 260°C for 5 to 8 secs.
Operating Temperature:	-55°C to + 85°C
UL File Number:	E135615

Note: IR Reflow compatible version also available; Consult factory for details

Electrical

Contact Resistance:	20 mΩ max.
Insulation resistance:	500 MΩ min. at 500V DC for 2 mins max.
Current Rating:	1.25 Amps per contact
Voltage Rating:	125 Volts AC
DWV:	1000 VAC, 60 Hz. 1 min.
LED Forward DC Current:	20mA typical
LED Forward Voltage:	1.9 Volts max. at 2mA (for single colours) 2.6 Volts max. at 20mA (for bicolours)
LED Reverse Voltage:	5 Volts min.
LED Light Intensity:	0.4 to 1.5 mcd min. at 2mA (for single colours) 0.5 mcd min. at 2mA (for bicolours)
LED Wave Length:	Yellow: 587 ± 7 nm measured at 20mA Green: 565 ± 6 nm measured at 20mA Red: 625 ± 5 nm measured at 20mA

ORDERING INFORMATION

RJE7B - 1 8 8 - 1 X X X - X

Number of Ports
1 - 1 Port

Number of Positions
8 - 8 Positions

Number of Contacts
8 - 8 Contacts

Shield Options
1 - Full shield with top and bottom tabs

Packaging
Blank - Tray
T - Tape & Reel

Modifier
1 - 0.125" (3.18mm)
2 - 0.089" (2.27mm)
3 - 0.085" (2.16mm)

LED Options
Click to view page 3 for options

Contact Plating
1 - 6µ" gold plating
2 - 15µ" gold plating
3 - 30µ" gold plating
4 - 50µ" gold plating

Didn't find what you were looking for?
Please contact sales@amphenolcanada.com and let us know what you need.

RJE7B

CAT 6A, RIGHT ANGLE, STANDARD PROFILE, WITH LEDs

Single Port

RJE7B-188-1XXX

Shielded

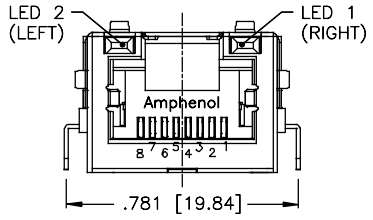

FRONT VIEW

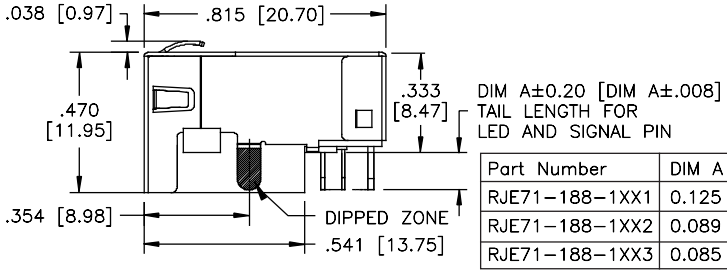

Part Number	DIM A
RJE71–188–1XX1	0.125 [3.18]
RJE71–188–1XX2	0.089 [2.27]
RJE71–188–1XX3	0.085 [2.16]

SIDE VIEW

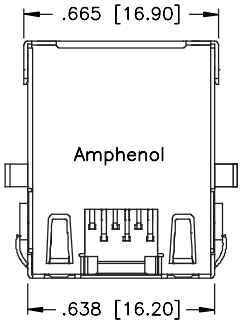

TOP VIEW

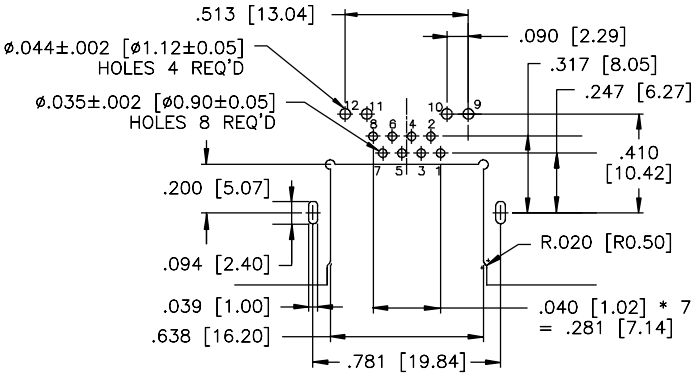

RECOMMENDED PCB LAYOUT

Notes

Click to Return to Table of Contents

Amphenol Commercial Products - Amphenol Canada Corp. | Telephone: (416) 291-4401 | Fax: (416) 754-8668 | Email: sales@amphenolcanada.com
All specifications are subject to change without notice. Catalogue is updated regularly. Please refer to www.amphenolcanada.com for the most recent edition.

RJE60

CAT 6A, RIGHT ANGLE, STANDARD PROFILE, WITH LEDs

RIGHT ANGLED, STANDARD PROFILE, WITH LEDs

The RJE60 series of modular jacks meet CAT 6A performance per EIA-568-C.2. It supports Gigabit Ethernet Protocols. Shielding is available for increased EMI performance and LEDs for link activity and network speed verification.

SPECIFICATIONS

Material

Insulator:	High temp. thermoplastic; Complies with UL 94V-0; Black
Contacts:	Phosphor bronze hard temper with gold thickness options (6µ", 15µ", 30µ", 50µ") over 50µ" min. nickel on contact mating area; 100µ" min. matte tin plating on solder tails
Shield:	Stainless steel with tin dipped tails
LED:	Tin plating on LED tail

Mechanical

Insertion Force:	5 lbs max.
Pull Retention Force:	20 lbs min.
Durability:	750 mating & unmating cycles
Recommended Soldering Temperature:	Wave soldering peaked at 260°C for 10 secs max. for one cycle with an LED defect rate of no more than 100ppm
Operating Temperature:	-55°C to + 85°C
UL File Number:	E135615

Note: Multiple exposure not recommended; IR Reflow compatible version also available; Consult factory for details

Electrical

Contact Resistance:	20 mΩ max.
Insulation resistance:	500 MΩ min. at 500V DC for 2 mins max.
Current Rating:	1.25 Amps per contact
Voltage Rating:	125 Volts AC
DWV:	1000 VAC, 60 Hz. 1 min.
LED Forward DC Current:	20mA typical
LED Forward Voltage:	1.9 Volts max. at 2mA (for single colours) 2.6 Volts max. at 20mA (for bicolours)
LED Reverse Voltage:	5 Volts min.
LED Light Intensity:	0.4 to 1.5 mcd min. at 2mA (for single colours) 0.5 mcd min. at 2mA (for bicolours)
LED Wave Length:	Yellow: 587 ± 7 nm measured at 20mA Green: 565 ± 6 nm measured at 20mA Red: 625 ± 5 nm measured at 20mA

ORDERING INFORMATION

RJE60 - 1 8 8 - X X X X - X

Number of Ports
1 - 1 Port

Number of Positions
8 - 8 Positions

Number of Contacts
8 - 8 Contacts

Shield Options
3 - Full shield with top tabs
5 - Full shield with top and side tabs
6 - Full shield without tabs

Packaging
Blank - Tray
T - Tape & Reel

Modifier
1 - Standard with boardlocks
2 - Without boardlocks

LED Options
Click to view page 3 for options

Contact Plating
1 - 6µ" gold plating
2 - 15µ" gold plating
3 - 30µ" gold plating
4 - 50µ" gold plating

Didn't find what you were looking for?
Please contact sales@amphenolcanada.com and let us know what you need.

RJE60

CAT 6A, RIGHT ANGLE, STANDARD PROFILE, WITH LEDs

Single Port

RJE60-188-3XX1

Shielded - Option 3

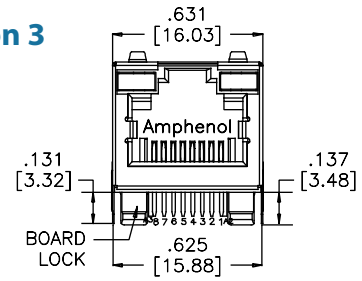

FRONT VIEW

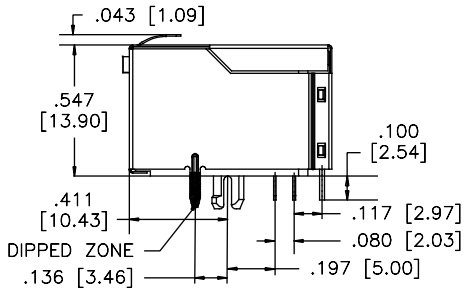

SIDE VIEW

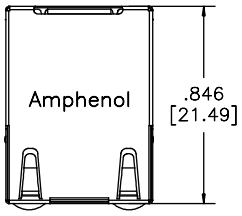

TOP VIEW

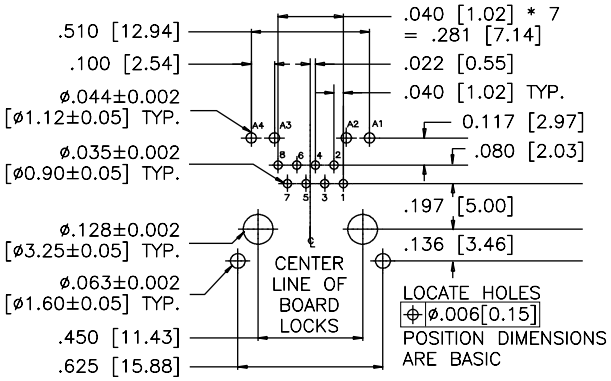

RECOMMENDED PCB LAYOUT

Shielded - Option 5

RJE60-188-5XX1

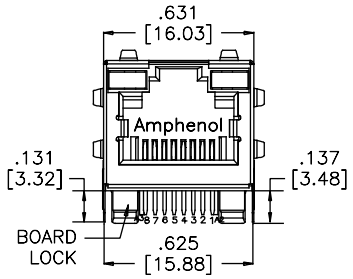

FRONT VIEW

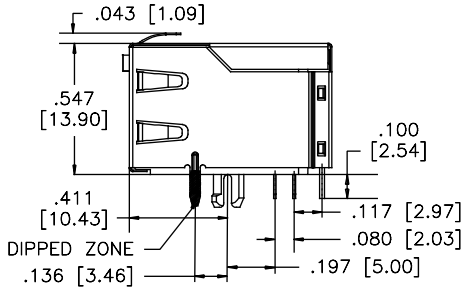

SIDE VIEW

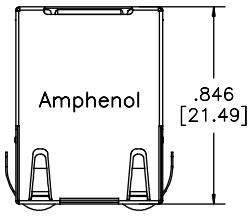

TOP VIEW

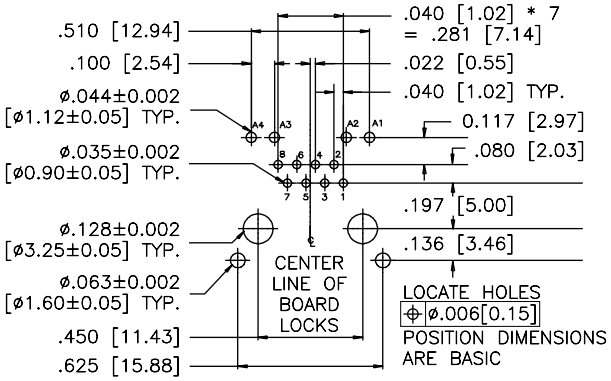

RECOMMENDED PCB LAYOUT

Amphenol Commercial Products - Amphenol Canada Corp. | Telephone: (416) 291-4401 | Fax: (416) 754-8668 | Email: sales@amphenolcanada.com
All specifications are subject to change without notice. Catalogue is updated regularly. Please refer to www.amphenolcanada.com for the most recent edition.

RJE60

CAT 6A, RIGHT ANGLE, STANDARD PROFILE, WITH LEDs

Single Port

RJE60-188-6XX1

Shielded - Option 6

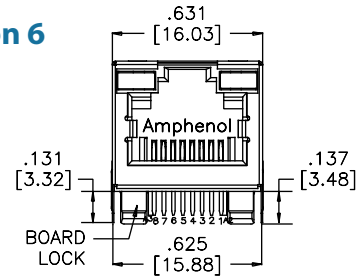

FRONT VIEW

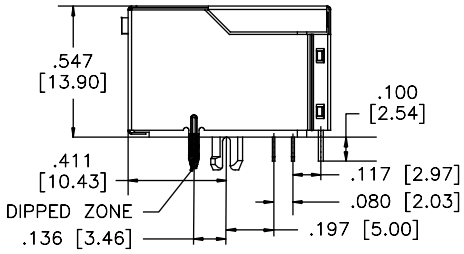

SIDE VIEW

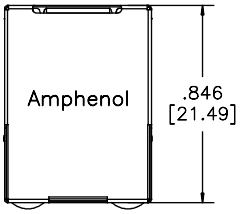

TOP VIEW

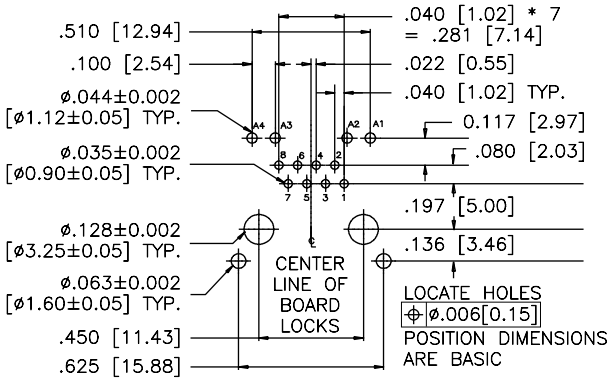

RECOMMENDED PCB LAYOUT

Notes

RJE17

RJ45 COUPLER

RJ45 COUPLER

The RJE17 coupler provides connections through barriers such as equipment covers and panels. They are locked into place with a panel latch for secure mounting. Available in CAT 3 and CAT 5e performance. The added shielding provides optional EMI protection.

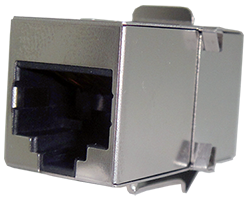

SPECIFICATIONS

Material

Insulator:	Engineering thermoplastic; Complies with UL 94V-0; Black
Contacts:	Phosphor bronze hard temper with several gold thickness options over 50µ" min. nickel on contact mating area (refer to drawing below)
Shield:	Stainless steel with tin dipped tails

Electrical

Contact Resistance:	20 mΩ max.
Insulation resistance:	500 MΩ min. at 500V DC for 2 mins max.
Current Rating:	1.25 Amps per contact
Voltage Rating:	125 Volts AC
DWV:	1000 VAC, 60 Hz. 1 min.

Mechanical

Insertion Force:	5 lbs max.
Pull Retention Force:	20 lbs min.
Durability:	750 mating & unmating cycles
Operating Temperature:	-40°C to + 70°C
Operating Temperature:	-40°C to + 85°C
UL File Number	E136228

ORDERING INFORMATION

RJE17 - 2 8 8 - X X X X

Number of Ports
2 - 2 Port

Number of Positions
8 - 8 Positions

Number of Contacts
8 - 8 Contacts

Shield Options
0 - No shield
1 - Full shield

Modifier
1 - CAT 3, matte tin plating on internal tail
3 - Cat 5e, matte tin plating on internal tail

Port Options
1 - Both ports are tab down
2 - One port is tab up, other is tab down

Contact Plating
2 - 15µ" gold plating
3 - 30µ" gold plating
4 - 50µ" gold plating

Didn't find what you were looking for?
Please contact sales@amphenolcanada.com and let us know what you need.

Click to Return to Table of Contents

RJE17

RJ45 COUPLER

Single Port

RJE17-288-1X21

Shielded

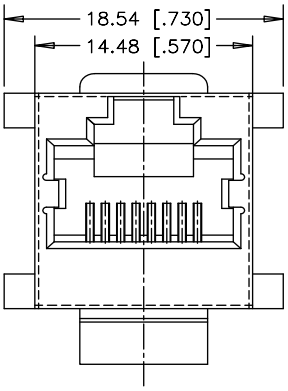

FRONT VIEW

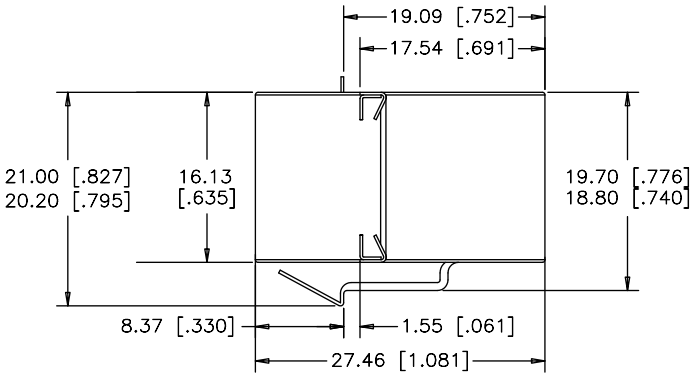

SIDE VIEW

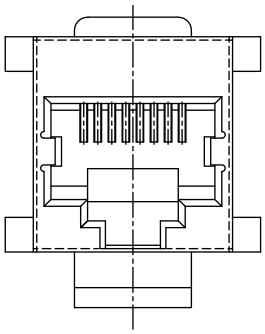

REAR VIEW

Notes

STACKED

Right Angle

RJSDE

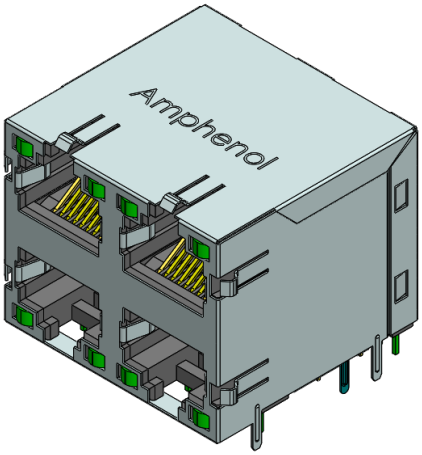

RJSAR

RJSFE

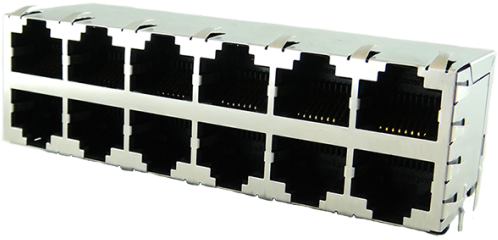

Click to Return to Table of Contents

HIGH PERFORMANCE

CAT 5e

RJE1A

RJE2A

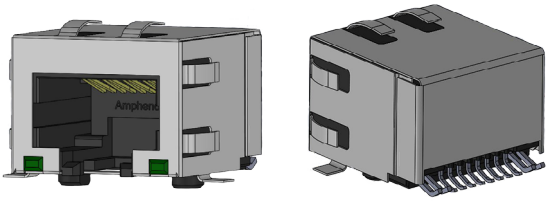

RJE72

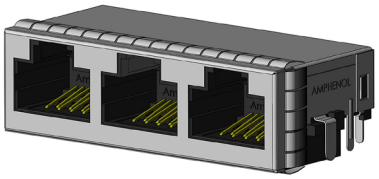

CAT 6

RJE1B

CAT 6A

RJE1C

RJE50

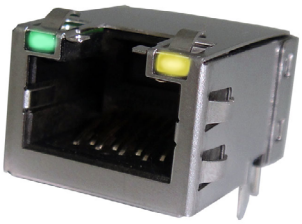

Click to Return to Table of Contents

DUST COVERS & OTHERS

Dust Covers

FRJ-2611

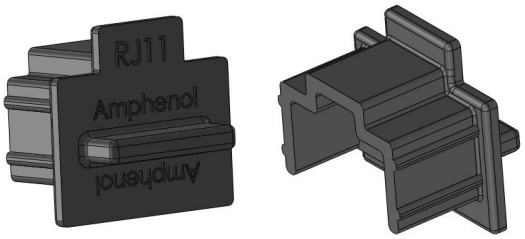

FRJ-2411

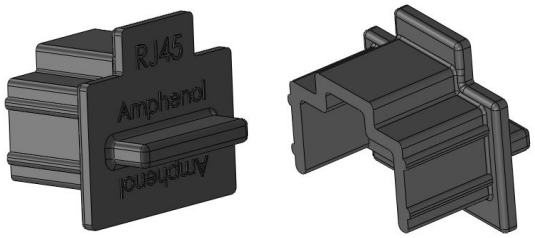

Other

RJE1L

Click to Return to Table of Contents

NOTES

Amphenol ICC

605 Milner Avenue
Toronto, Ontario
Canada, M1B 5X6

www.amphenolcanada.com (www.amphenol-icc.com)
Telephone: (416) 291-4401
Fax: (416) 754-8668
E-mail: sales@amphenolcanada.com

All specifications are subject to change without notice.

August 2018

OCEAN CHIPS
Океан Электроники
Поставка электронных компонентов

Компания «Океан Электроники» предлагает заключение долгосрочных отношений при поставках импортных электронных компонентов на взаимовыгодных условиях!

Наши преимущества:

- Поставка оригинальных импортных электронных компонентов напрямую с производств Америки, Европы и Азии, а так же с крупнейших складов мира;
- Широкая линейка поставок активных и пассивных импортных электронных компонентов (более 30 млн. наименований);
- Поставка сложных, дефицитных, либо снятых с производства позиций;
- Оперативные сроки поставки под заказ (от 5 рабочих дней);
- Экспресс доставка в любую точку России;
- Помощь Конструкторского Отдела и консультации квалифицированных инженеров;
- Техническая поддержка проекта, помощь в подборе аналогов, поставка прототипов;
- Поставка электронных компонентов под контролем ВП;
- Система менеджмента качества сертифицирована по Международному стандарту ISO 9001;
- При необходимости вся продукция военного и аэрокосмического назначения проходит испытания и сертификацию в лаборатории (по согласованию с заказчиком);
- Поставка специализированных компонентов военного и аэрокосмического уровня качества (Xilinx, Altera, Analog Devices, Intersil, Interpoint, Microsemi, Actel, Aeroflex, Peregrine, VPT, Syfer, Eurofarad, Texas Instruments, MS Kennedy, Miteq, Cobham, E2V, MA-COM, Hittite, Mini-Circuits, General Dynamics и др.);

Компания «Океан Электроники» является официальным дистрибьютором и эксклюзивным представителем в России одного из крупнейших производителей разъемов военного и аэрокосмического назначения **«JONHON»**, а так же официальным дистрибьютором и эксклюзивным представителем в России производителя высокотехнологичных и надежных решений для передачи СВЧ сигналов **«FORSTAR»**.

AVIC JONHON

«JONHON» (основан в 1970 г.)

Разъемы специального, военного и аэрокосмического назначения:

(Применяются в военной, авиационной, аэрокосмической, морской, железнодорожной, горно- и нефтедобывающей отраслях промышленности)

«FORSTAR» (основан в 1998 г.)

ВЧ соединители, коаксиальные кабели, кабельные сборки и микроволновые компоненты:

(Применяются в телекоммуникациях гражданского и специального назначения, в средствах связи, РЛС, а так же военной, авиационной и аэрокосмической отраслях промышленности).

FORSTAR®

Телефон: 8 (812) 309-75-97 (многоканальный)
Факс: 8 (812) 320-03-32
Электронная почта: ocean@oceanchips.ru
Web: http://oceanchips.ru/
Адрес: 198099, г. Санкт-Петербург, ул. Калинина, д. 2, корп. 4, лит. А