# RoHS Pb HF ZA Varistor Series

## Agency Approvals

| Agency | Agency File Number |
|---|---|
| UL | E135010, (+ E320116 for selected parts) |
| VDE | 116895 |
| CSA | 42201-006 |

## Description

The ZA Series of transient voltage surge suppressors are radial leaded varistors (MOVs) designed for use in the protection of low and medium-voltage circuits and systems. Typical applications include motor control, telecom, automotive systems, solenoid, and power supply circuits to protect circuit board components and maintain data integrity.

These devices are available in five model sizes: 5mm, 7mm, 10mm, 14mm and 20mm, and feature a wide $V_{DC}$ voltage range of 5.5V to 615V.

See ZA Series Device Ratings and Specifications Table for part number and brand information.

## Features

- Lead–free, Halogen-Free and RoHS compliant
- Wide operating voltage range $V_{M(AC)RMS}$ 4V to 460V
- DC voltage ratings 5.5V to 615V
- No derating up to 85°C ambient
- 5 model sizes available: 5, 7, 10, 14, and 20mm
- Radial lead package for hard-wired or printed circuit board designs
- Available in tape and reel or bulk pack
- Standard lead form options

ZA Series

## Absolute Maximum Ratings

• For ratings of individual members of a series, see Device Ratings and Specifications chart

| Continuous | ZA Series | Units |
|---|---|---|
| Steady State Applied Voltage: | | |
| AC Voltage Range ($V_{M(AC)RMS}$) | 4 to 460 | V |
| DC Voltage Range ($V_{M(DC)}$) | 5.5 to 615 | V |
| Transients: | | |
| Peak Pulse Current ($I_{TM}$) | | |
| For 8/20$\mu$s Current Wave (See Figure 2) | 50 to 6500 | A |
| Single Pulse Energy Range (Note 1) | | |
| For 10/1000$\mu$s Current Wave ($W_{TM}$) | 0.1 to 52 | J |
| Operating Ambient Temperature Range ($T_A$) | -55 to +85 | °C |
| Storage Temperature Range ($T_{STG}$) | -55 to +125 | °C |
| Temperature Coefficient ($a^V$) of Clamping Voltage ($V_C$) at Specified Test Current | <0.01 | %/°C |
| Hi-Pot Encapsulation (COATING Isolation Voltage Capability) (Dielectric must withstand indicated DC voltage for one minute per MIL–STD–202, Method 301) | 2500 | V |
| COATING Insulation Resistance | 1000 | MΩ |

*CAUTION: Stresses above those listed in "Absolute Maximum Ratings" may cause permanent damage to the device. This is a stress only rating and operation of the device at these or any other conditions above those indicated in the operational sections of this specification is not implied.*

©2012 Littelfuse, Inc.
Specifications are subject to change without notice.
Please refer to www.littelfuse.com/series/za.html for current information.

## ZA Series Ratings & Specifications

| Part Number | Branding | Model Size Disc Dia. (mm) | Maximum Rating (85°C) | | | | Specifications (25°C) | | | | |
|---|---|---|---|---|---|---|---|---|---|---|---|
| | | | Continuous | | Transient | | Varistor Voltage at 1mA DC Test Current | | Maximum Clamping Voltage 8 x 20µs | | Typical Capacitance f = 1MHz |
| | | | $V_{RMS}$ | $V_{DC}$ | Energy 10 x 1000µs | Peak Current 8 x 20µs | | | | | |
| | | | $V_{M(AC)}$ | $V_{M(DC)}$ | $W_{TM}$ | $I_{TM}$ | $V_{NOM}$ Min | $V_{NOM}$ Max | $V_C$ | $I_{PK}$ | C |
| | | | (V) | (V) | (J) | (A) | (V) | (V) | (V) | (A) | (pF) |
| V8ZA05P | PZ08 | 5 | 4 | 5.5 | 0.1 | 50 | 6 | 11 | 30 | 1 | 2000 |
| V8ZA1P | P08Z1 | 7 | 4 | 5.5 | 0.4 | 100 | 6 | 11 | 22 | 2.5 | 4190 |
| V8ZA2P | P08Z2 | 10 | 4 | 5.5 | 0.8 | 250 | 6 | 11 | 20 | 5 | 7000 |
| V12ZA05P | PZ12 | 5 | 6 | 8 | 0.14 | 50 | 9 | 16 | 37 | 1 | 1700 |
| V12ZA1P | P12Z1 | 7 | 6 | 8 | 0.6 | 100 | 9 | 16 | 34 | 2.5 | 3350 |
| V12ZA2P | P12Z2 | 10 | 6 | 8 | 1.2 | 250 | 9 | 16 | 30 | 5 | 6100 |
| V18ZA05P | PZ18 | 5 | 10 | 14 | 0.17 | 100 | 14.4 | 21.6 | 36 | 1 | 1400 |
| V18ZA1P | P18Z1 | 7 | 10 | 14 | 0.8 | 250 | 14.4 | 21.6 | 36 | 2.5 | 2700 |
| V18ZA2P | P18Z2 | 10 | 10 | 14 | 1.5 | 500 | 14.4 | 21.6 | 36 | 5 | 5300 |
| V18ZA3P | P18Z3 | 14 | 10 | 14 | 3.5 | 1000 | 14.4 | 21.6 | 36 | 10 | 18870 |
| V18ZA20P | P18Z20 | 20 | 10 | 14 | 10 | 2000 | 14.4 | 21.6 | 37 | 20 | 22000 |
| V18ZA40P | P18Z40 | 20 | 10 | 14 | 80 (Note2) | 2000 | 14.4 (Note 3) | 21.6 | 37 | 20 | 22000 |
| V22ZA05P | PZ22 | 5 | 14 | 18 | 0.2 | 100 | 18.7 | 26 | 43 | 1 | 1220 |
| V22ZA1P | P22Z1 | 7 | 14 | 18 | 0.9 | 250 | 18.7 | 26 | 43 | 2.5 | 2375 |
| V22ZA2P | P22Z2 | 10 | 14 | 18 | 2 | 500 | 18.7 | 26 | 43 | 5 | 4500 |
| V22ZA3P | P22Z3 | 14 | 14 | 18 | 4 | 1000 | 18.7 | 26 | 43 | 10 | 14730 |
| V24ZA20P | P24Z20 | 20 | 14 | 18 | 12 | 2000 | 18.7 | 26 | 43 | 20 | 18000 |
| V24ZA50P | P24Z50 | 20 | 14 | 18 (Note 4) | 100 (Note 2) | 2000 | 19.2 (Note 3) | 26 | 43 | 20 | 18000 |
| V27ZA05P | PZ27 | 5 | 17 | 22 | 0.25 | 100 | 23 | 31.1 | 53 | 1 | 920 |
| V27ZA1P | P27Z1 | 7 | 17 | 22 | 1 | 250 | 23 | 31.1 | 53 | 2.5 | 1875 |
| V27ZA2P | P27Z2 | 10 | 17 | 22 | 2.5 | 500 | 23 | 31.1 | 53 | 5 | 3850 |
| V27ZA4P | P27Z4 | 14 | 17 | 22 | 5 | 1000 | 23 | 31.1 | 53 | 10 | 11480 |
| V27ZA20P | P27Z20 | 20 | 17 | 22 | 14 | 2000 | 23 | 31.1 | 53 | 20 | 13000 |
| V27ZA60P | P27Z60 | 20 | 17 | 22 | 120 (Note 2) | 2000 | 23 (Note 3) | 31.1 | 50 | 20 | 13000 |
| V33ZA05P | PZ33 | 5 | 20 | 26 | 0.3 | 100 | 29.5 | 38 | 65 | 1 | 790 |
| V33ZA1P | P33Z1 | 7 | 20 | 26 | 1.2 | 250 | 29.5 | 36.5 | 65 | 2.5 | 1620 |
| V33ZA2P | P33Z2 | 10 | 20 | 26 | 3 | 500 | 29.5 | 36.5 | 65 | 5 | 3495 |
| V33ZA5P | P33Z5 | 14 | 20 | 26 | 6 | 1000 | 29.5 | 36.5 | 65 | 10 | 9290 |
| V33ZA20P | P33Z20 | 20 | 20 | 26 | 18 | 2000 | 29.5 | 36.5 | 65 | 20 | 13000 |
| V33ZA70P | P33Z70 | 20 | 21 | 27 | 150 (Note 2) | 2000 | 29.5 (Note 3) | 36.5 | 58 | 20 | 13000 |
| V36ZA20P | P36Z20 | 20 | 23 | 28 | 20 | 2000 | 32 | 40 | 70 | 20 | 12000 |
| V36ZA80P | P36Z80 | 20 | 23 | 31 | 160 (Note 2) | 2000 | 32 (Note 3) | 40 | 63 | 20 | 12000 |
| V39ZA05P | PZ39 | 5 | 25 | 31 | 0.3 | 100 | 35 | 46 | 79 | 1 | 675 |
| V39ZA1P | P39Z1 | 7 | 25 | 31 | 1.2 | 250 | 35 | 43 | 79 | 2.5 | 1350 |
| V39ZA3P | P39Z3 | 10 | 25 | 31 | 3 | 500 | 35 | 43 | 76 | 5 | 3100 |
| V39ZA6P | P39Z6 | 14 | 25 | 31 | 7.2 | 1000 | 35 | 43 | 76 | 10 | 7000 |
| V39ZA20P | P39Z20 | 20 | 25 | 31 | 20 | 2000 | 35 | 43 | 76 | 20 | 12000 |
| V47ZA05P | PZ47 | 5 | 30 | 38 | 0.4 | 100 | 42 | 55 | 93 | 1 | 585 |
| V47ZA1P | P47Z1 | 7 | 30 | 38 | 1.8 | 250 | 42 | 52 | 93 | 2.5 | 1245 |
| V47ZA3P | P47Z3 | 10 | 30 | 38 | 4.5 | 500 | 42 | 52 | 93 | 5 | 2590 |
| V47ZA7P | P47Z7 | 14 | 30 | 38 | 8.8 | 1000 | 42 | 52 | 93 | 10 | 6270 |
| V47ZA20P | P47Z20 | 20 | 30 | 38 (Note 6) | 23 (Note 7) | 2000 | 42 | 52 | 93 | 20 | 11000 |





©2012 Littelfuse, Inc.
Specifications are subject to change without notice.
Please refer to www.littelfuse.com/series/za.html for current information.

## ZA Series Ratings & Specifications (Continued...)

| Part Number | Branding | Model Size Disc Dia. (mm) | Maximum Rating (85°C) | | | | Specifications (25°C) | | | | |
|---|---|---|---|---|---|---|---|---|---|---|---|
| | | | Continuous | | Transient | | Varistor Voltage at 1mA DC Test Current | | Maximum Clamping Voltage 8 x 20µs | | Typical Capacitance f = 1MHz |
| | | | $V_{RMS}$ | $V_{DC}$ | Energy 10 x 1000µs | Peak Current 8 x 20µs | | | | | |
| | | | $V_{M(AC)}$ | $V_{M(DC)}$ | $W_{TM}$ | $I_{TM}$ | $V_{NOM}$ Min | $V_{NOM}$ Max | $V_C$ | $I_{PK}$ | C |
| | | | (V) | (V) | (J) | (A) | (V) | (V) | (V) | (A) | (pF) |
| V56ZA05P | PZ56 | 5 | 35 | 45 | 0.5 | 100 | 50 | 66 | 110 | 1 | 500 |
| V56ZA2P | P56Z2 | 7 | 35 | 45 | 2.3 | 250 | 50 | 62 | 110 | 2.5 | 1035 |
| V56ZA3P | P56Z3 | 10 | 35 | 45 | 5.5 | 500 | 50 | 62 | 110 | 5 | 2150 |
| V56ZA8P | P56Z8 | 14 | 35 | 45 | 10 | 1000 | 50 | 62 | 110 | 10 | 4840 |
| V56ZA20P | P56Z20 | 20 | 35 | 45 | 30 | 2000 | 50 | 62 | 110 | 20 | 10000 |
| V68ZA05P | PZ68 | 5 | 40 | 56 | 0.6 | 100 | 61 | 80 | 135 | 1 | 400 |
| V68ZA2P | P68Z2 | 7 | 40 | 56 | 3 | 250 | 61 | 75 | 135 | 2.5 | 910 |
| V68ZA3P | P68Z3 | 10 | 40 | 56 | 6.5 | 500 | 61 | 75 | 135 | 5 | 1850 |
| V68ZA10P | P68Z10 | 14 | 40 | 56 | 13 | 1000 | 61 | 75 | 135 | 10 | 3870 |
| V68ZA20P | P68Z20 | 20 | 40 | 56 | 33 | 2000 | 61 | 75 | 135 | 20 | 9000 |
| V82ZA05P | PZ82 | 5 | 50 | 68 | 2 | 400 | 73 | 97 | 135 | 5 | 355 |
| V82ZA2P | P82Z2 | 7 | 50 | 68 | 4 | 1200 | 73 | 91 | 135 | 10 | 700 |
| V82ZA4P | P82Z4 | 10 | 50 | 68 | 8 | 2500 | 73 | 91 | 135 | 25 | 1485 |
| V82ZA12P | P82Z12 | 14 | 50 | 68 | 15 | 4500 | 73 | 91 | 145 | 50 | 3380 |
| V82ZA20P | P82Z20 | 20 | 50 | 68 | 25 | 6500 | 73 | 91 | 145 | 100 | 7000 |
| V100ZA05P | PZ100 | 5 | 60 | 81 | 2.5 | 400 | 90 | 117 | 165 | 5 | 310 |
| V100ZA3P | P100Z | 7 | 60 | 81 | 5 | 1200 | 90 | 110 | 165 | 10 | 600 |
| V100ZA4P | P100Z4 | 10 | 60 | 81 | 10 | 2500 | 90 | 110 | 165 | 25 | 1200 |
| V100ZA15P | P100Z15 | 14 | 60 | 81 | 20 | 4500 | 90 | 110 | 175 | 50 | 2900 |
| V100ZA20P | P100Z20 | 20 | 60 | 81 | 30 | 6500 | 90 | 110 | 175 | 100 | 6500 |
| V120ZA05P | PZ120 | 5 | 75 | 102 | 3 | 400 | 108 | 138 | 205 | 5 | 250 |
| V120ZA1P | P120Z | 7 | 75 | 102 | 6 | 1200 | 108 | 132 | 205 | 10 | 515 |
| V120ZA4P | P120Z4 | 10 | 75 | 102 | 12 | 2500 | 108 | 132 | 200 | 25 | 1100 |
| V120ZA6P | P120Z6 | 14 | 75 | 102 | 22 | 4500 | 108 | 132 | 210 | 50 | 2450 |
| V120ZA20P | P120Z20 | 20 | 75 | 102 | 33 | 6500 | 108 | 132 | 210 | 100 | 5000 |
| V150ZA05P | PZ150 | 5 | 92 | 127 | 4 | 400 | 135 | 173 | 250 | 5 | 190 |
| V150ZA1P | PZ051 | 7 | 95 | 127 | 8 | 1200 | 135 | 165 | 250 | 10 | 460 |
| V150ZA4P | P150Z4 | 10 | 95 | 127 | 15 | 2500 | 135 | 165 | 250 | 25 | 860 |
| V150ZA8P | P150Z8 | 14 | 95 | 127 | 20 | 4500 | 135 | 165 | 250 | 50 | 1910 |
| V150ZA20P | P150Z20 | 20 | 95 | 127 | 45 | 6500 | 135 | 165 | 250 | 100 | 3500 |
| V180ZA05P | PZ180 | 5 | 110 | 153 | 5 | 400 | 162 | 207 | 295 | 5 | 100 |
| V180ZA1P | P180Z | 7 | 115 | 153 | 10 | 1200 | 162 | 198 | 300 | 10 | 320 |
| V180ZA5P | P180Z5 | 10 | 115 | 153 | 18 | 2500 | 162 | 198 | 300 | 25 | 465 |
| V180ZA10P | P180Z10 | 14 | 115 | 153 | 35 | 4500 | 162 | 198 | 300 | 50 | 1190 |
| V180ZA20P | P180Z20 | 20 | 115 | 153 | 52 | 6500 | 162 | 198 | 300 | 100 | 2400 |
| V205ZA05P | PZ205 | 5 | 130 | 170 | 5.5 | 400 | 184 | 226 | 340 | 5 | 100 |
| V220ZA05P | PZ220 | 5 | 140 | 180 | 6 | 400 | 198 | 253 | 360 | 5 | 95 |
| †V240ZA05P | PZ240 | 5 | 150 | 200 | 7 | 400 | 216 | 264 | 395 | 5 | 90 |
| †V270ZA05P | PZ270 | 5 | 175 | 225 | 7.5 | 400 | 243 | 311 | 455 | 5 | 75 |
| †V330ZA05P | PZ330 | 5 | 210 | 275 | 9 | 400 | 297 | 380 | 540 | 5 | 70 |
| †V360ZA05P | PZ360 | 5 | 230 | 300 | 9.5 | 400 | 324 | 396 | 595 | 5 | 60 |
| †V390ZA05P | PZ390 | 5 | 250 | 330 | 10 | 400 | 351 | 449 | 650 | 5 | 80 |
| †V430ZA05P | PZ430 | 5 | 275 | 369 | 11 | 400 | 387 | 495 | 710 | 5 | 75 |
| †V470ZA05P | PZ470 | 5 | 300 | 385 | 12 | 400 | 420 | 517 | 775 | 5 | 70 |
| †V620ZA05P | PZ620 | 5 | 385 | 505 | 13 | 400 | 558 | 682 | 1025 | 5 | 45 |
| †V680ZA05P | PZ680 | 5 | 420 | 560 | 14 | 400 | 610 | 748 | 1120 | 5 | 40 |
| †V715ZA05P | PZ715 | 5 | 440 | 585 | 15.5 | 400 | 643 | 787 | 1180 | 5 | 35 |
| †V750ZA05P | PZ750 | 5 | 460 | 615 | 17 | 400 | 675 | 825 | 1240 | 5 | 30 |

Note:
1. Average power dissipation of transients not to exceed 0.2W, 0.25W, 0.4W, 0.6W or 1W for model sizes 5mm, 7mm, 10mm, 14mm and 20mm, respectively.
2. Energy rating for impulse duration of 30ms minimum to one half of peak current (auto Load Dump).
3. 10mA DC test current.
4. Also rated to withstand 24V for 5 minutes.
5. Higher voltages available, contact Littelfuse.
6. Also rated to withstand 48V for 5 minutes.
7. Energy rating for impulse duration of 30ms minimum to one half of peak current (Auto Load Dump): 100J

† Also Recognized to UL 1449, Transient Voltage Surge Suppressors File E320116



©2012 Littelfuse, Inc.



Specifications are subject to change without notice.
Please refer to www.littelfuse.com/series/za.html for current information.

Revision: February 9, 2012

Littelfuse®
Expertise Applied | Answers Delivered

## Phenolic Coating Option -- ZA Series Varistors for Hi-Temperature Operating Conditions:

- Phenolic coated ZA Series devices are available with improved maximum operating temperature of 125°C
- These devices also have improved temperature cycling performance capability
- Ratings and specifications are as per standard ZA Series except Hi–Pot Encapsulation (Isolation Voltage Capability) = 500V
- To order: add 'X1347' to part number (e.g. V22ZA3PX1347)
- These devices are not UL, CSA, VDE or CECC certified
- Contact factory for further details
- Product marking:

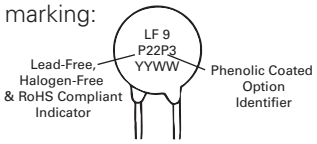


## Current Energy and Power Dissipation Ratings

Should transients occur in rapid succession, the average power dissipation is the energy (watt-seconds) per pulse times the number of pulses per second. The power so developed must be within the specifications shown on the Device Ratings and Specifications Table for the specific device. The operating values of a MOV need to be derated at high temperatures as shown above. Because varistors only dissipate a relatively small amount of average power they are not suitable for repetitive applications that involve substantial amounts of average power dissipation.

**Figure 1A - Power Derating for Epoxy Coated**

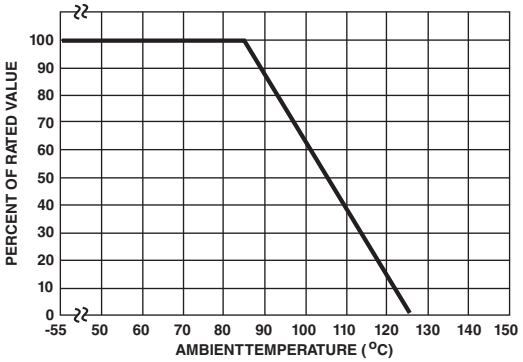


**Figure 1B - Power Derating for Phenolic Coated**

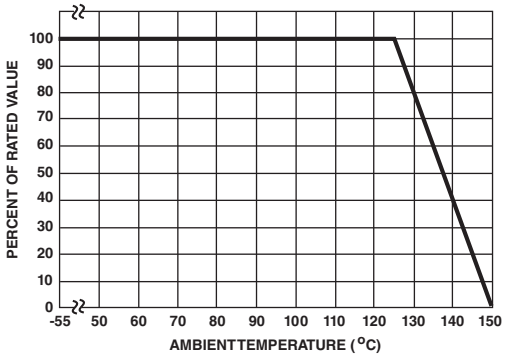


## Peak Pulse Current Test Waveform

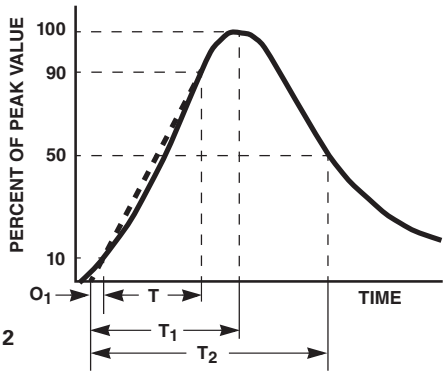


**Figure 2**

$0_1$ = Virtual Origin of Wave
T = Time from 10% to 90% of Peak
$T_1$ = Rise Time = 1.25 x T
$T_2$ = Decay Time
**Example** - For an 8/20 $\mu$s Current Waveform:
8$\mu$s = $T_1$ = Rise Time
20$\mu$s = $T_2$ = Decay Time


©2012 Littelfuse, Inc.
Specifications are subject to change without notice.
Please refer to www.littelfuse.com/series/za.html for current information.

## Maximum Clamping Voltage for 5mm Parts

V8ZA05(P) - V68ZA05(P)

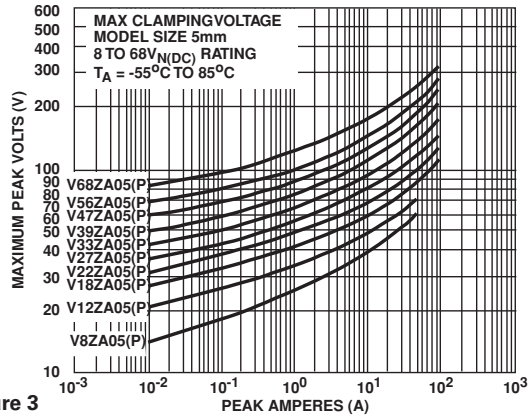


Figure 3

V82ZA05(P) - V33ZA05(P)

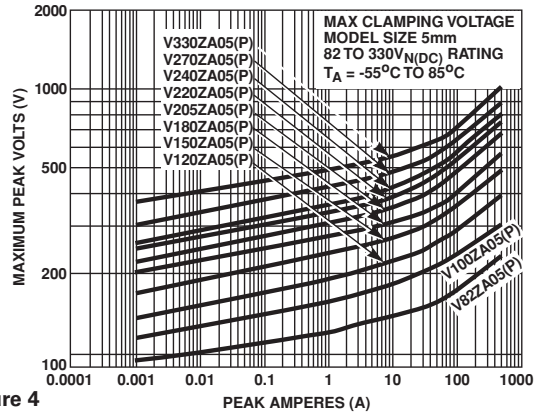


Figure 4

V360ZA05(P) - V750ZA05(P)

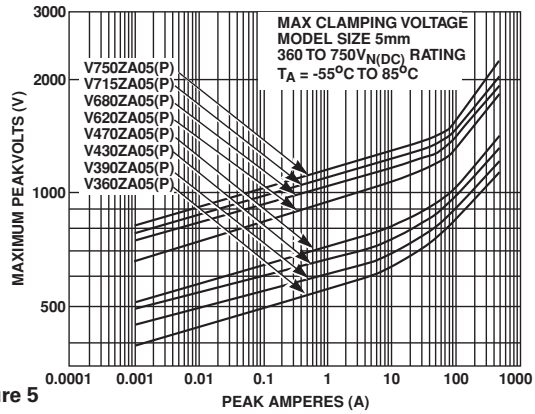


Figure 5

## Maximum Clamping Voltage for 7mm Parts

V8ZA1(P) - V68ZA2(P)

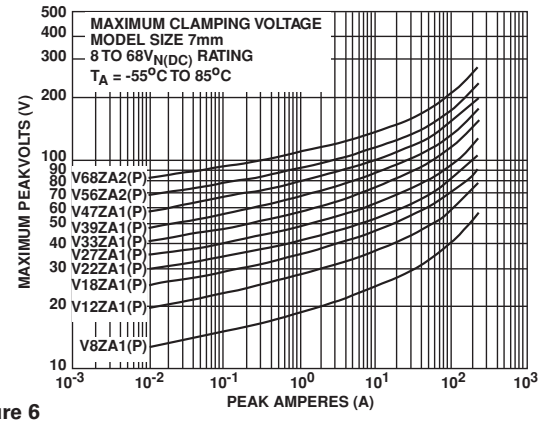


Figure 6

V82ZA2(P) - V180ZA1(P)

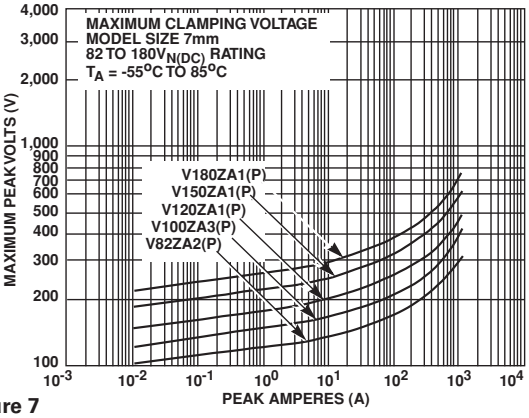


Figure 7

©2012 Littelfuse, Inc.

Littelfuse®
Expertise Applied | Answers Delivered

## Maximum Clamping Voltage for 10mm Parts

V8ZA2(P) - V68ZA3(P)

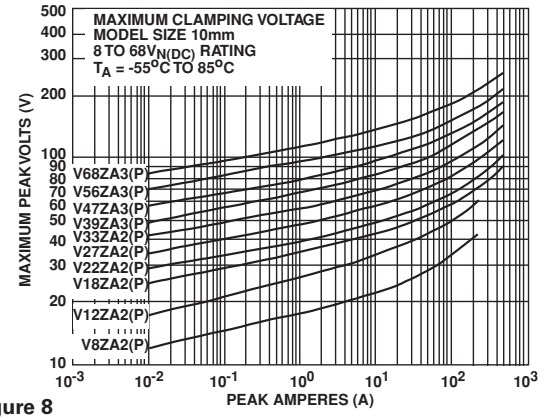


Figure 8

V82ZA4(P) - V180ZA5(P)

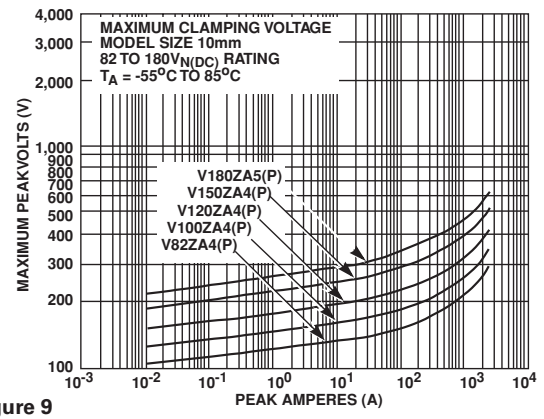


Figure 9

## Maximum Clamping Voltage for 14mm Parts

V18ZA3(P) - V68ZA10(P)

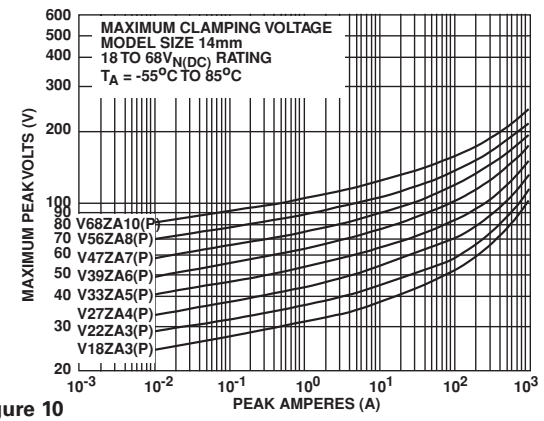


Figure 10

V82ZA12(P) - V180ZA10(P)

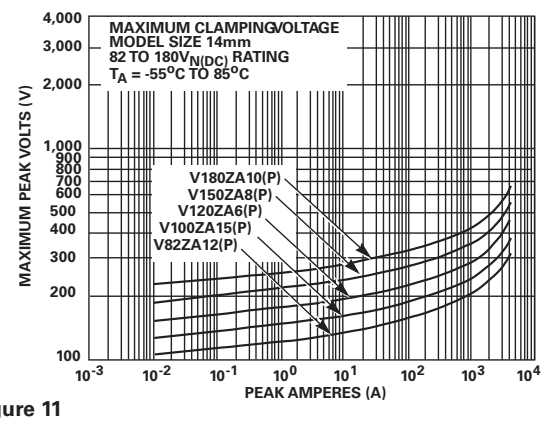


Figure 11



©2012 Littelfuse, Inc.
Specifications are subject to change without notice.
Please refer to www.littelfuse.com/series/za.html for current information.

Revision: February 9, 2012

## Maximum Clamping Voltage for 20mm Parts

**V18ZA20(P) - V36ZA80(P)**

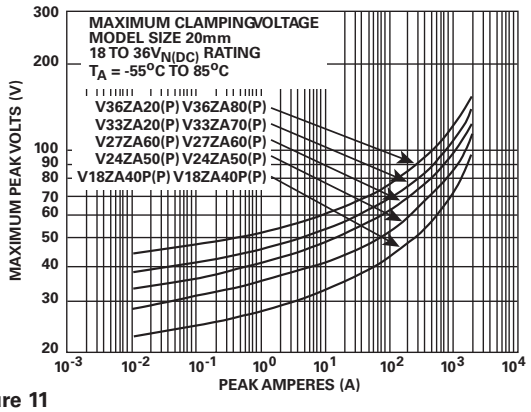


Figure 11

**V39ZA20(P) - V180ZA20(P)**

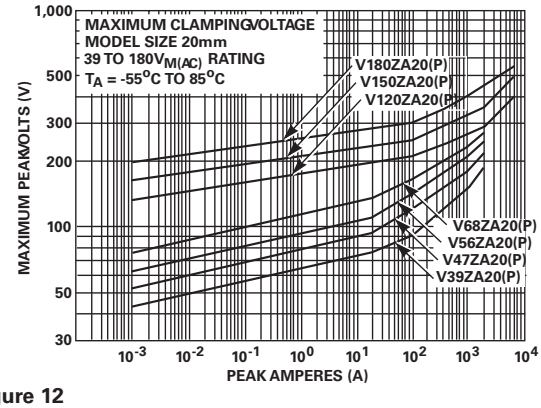


Figure 12

## Repetitive Surge Capability for 5mm Parts

**V8ZA05(P)**

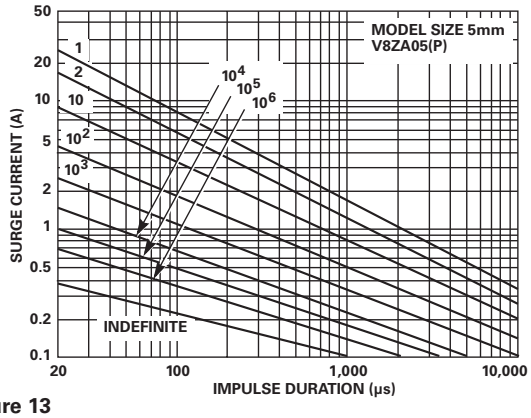


Figure 13

**V12ZA05(P) - V68ZA05(P)**

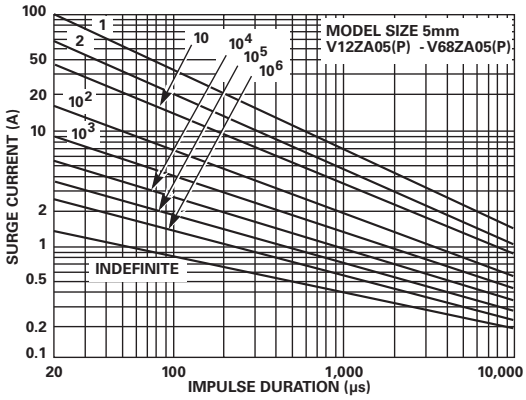


Figure 14

**V82ZA05(P) - V750ZA05(P)**

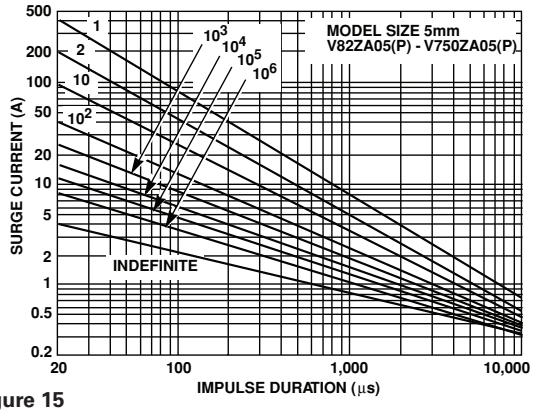


Figure 15

ZA Series

©2012 Littelfuse, Inc.

## Repetitive Surge Capability for 7mm Parts

V8ZA1(P) - V12ZA1(P)

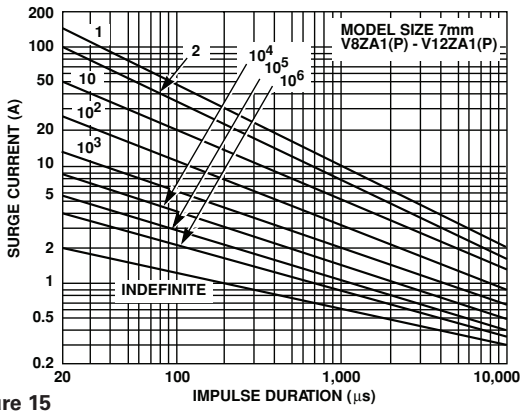


Figure 15

V18ZA1(P) - V68ZA2(P)

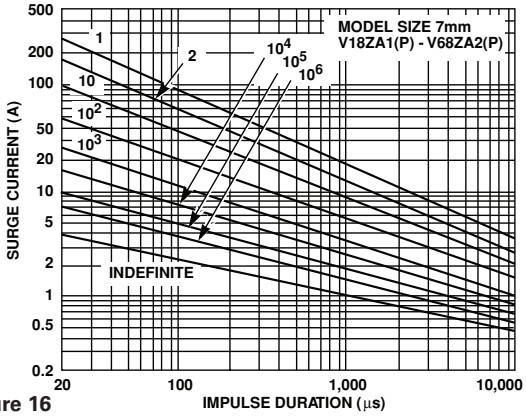


Figure 16

V82ZA2(P) - V180ZA1(P)

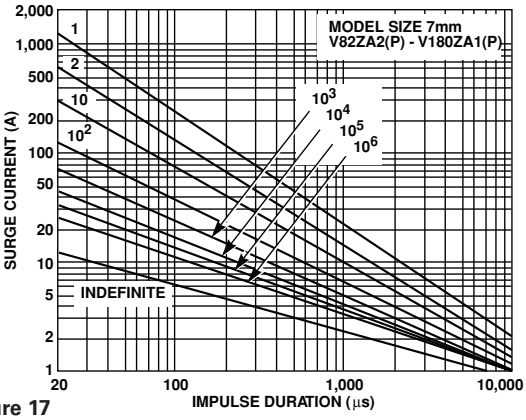


Figure 17

## Repetitive Surge Capability for 10mm Parts

V8ZA2(P) - V127ZA2(P)

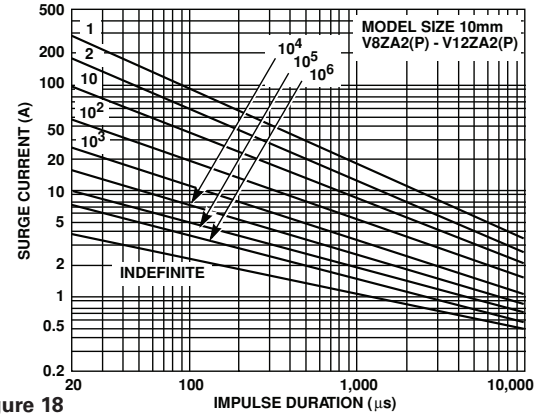


Figure 18

V18ZA2(P) - V68ZA3(P)

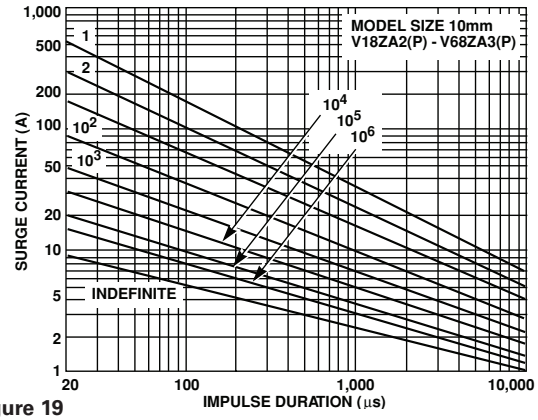


Figure 19

V82ZA4(P) - V180ZA5(P)

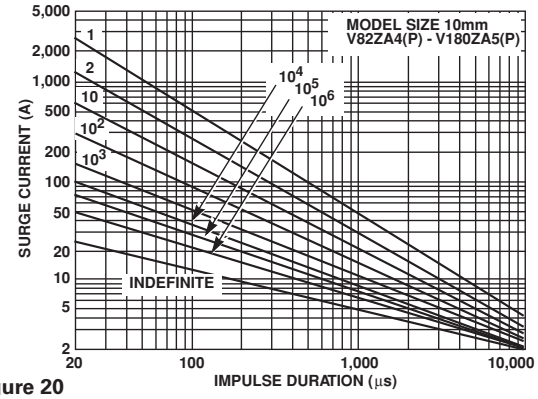


Figure 20



©2012 Littelfuse, Inc.
Specifications are subject to change without notice.
Please refer to www.littelfuse.com/series/za.html for current information.

Revision: February 9, 2012

## Repetitive Surge Capability for 14mm Parts

**V18ZA3(P) - V68ZA10(P)**

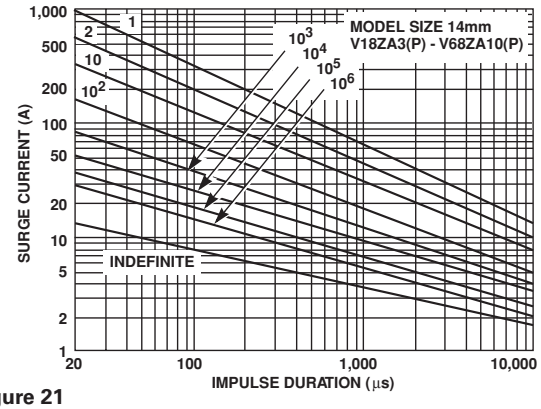


Figure 21

**V82ZA12(P) - V180ZA10(P)**

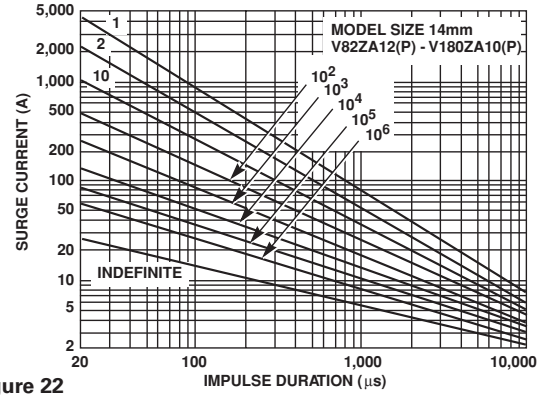


Figure 22

## Repetitive Surge Capability for 20mm Parts

**V18ZA40(P) - V68ZA20(P)**

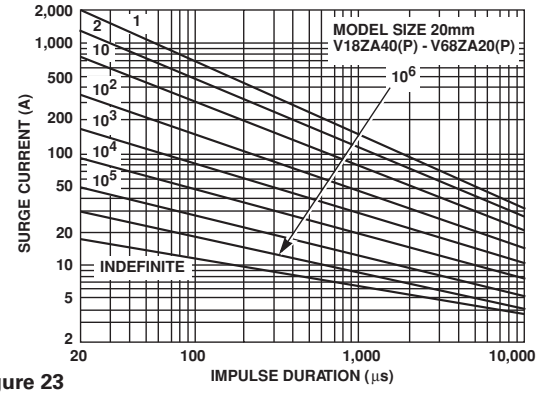


Figure 23

**V120ZA20(P) - V180ZA20(P)**

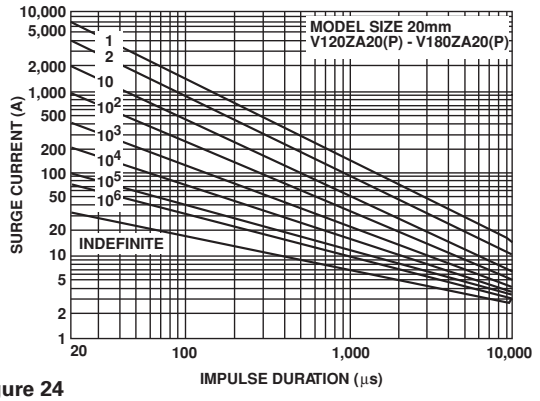


Figure 24

NOTE: If pulse ratings are exceeded, a shift of $V_{N(DC)}$ (at specified current) of more then +/-10% could result. This type of shift, which normally results in a decrease of $V_{N(DC)}$, may result in the device not meeting the original published specifications, but does not prevent the device from continuing to function, and to provide ample protection.



©2012 Littelfuse, Inc.
Specifications are subject to change without notice.
Please refer to www.littelfuse.com/series/za.html for current information.

## Wave Solder Profile

### Non Lead–free Profile

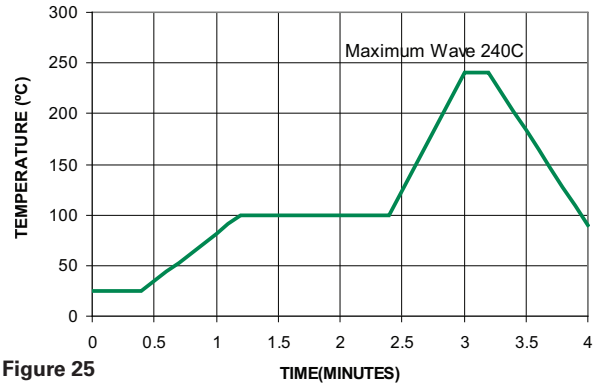


Figure 25

### Lead–free Profile

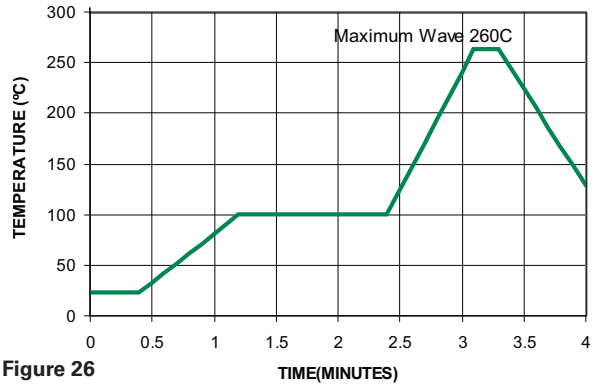


Figure 26

## Physical Specifications

| | |
|---|---|
| **Lead Material** | Tin–Coated Copper Wire |
| **Soldering Characteristics** | Solderability per MIL–STD–202, Method 208E |
| **Insulating Material** | Cured, flame retardant epoxy polymer meets UL94V–0 requirements |
| **Device Labeling** | Marked with LF, voltage, UL/CSA logos, and date code |

## Environmental Specifications

| | |
|---|---|
| **Operating Ambient Temperature Range** | -55°C to +85°C |
| **Storage Temperature Range** | -55°C to +125°C |
| **Humidity Aging** | +85°C, 85% RH,1000 hours<br>+/-10% typical voltage change |
| **Thermal Shock** | +85°C to -40°C 10 times<br>+/-10% typical voltage change |
| **Solvent Resistance** | MIL–STD–202, Method 215F |
| **Moisture Sensitivity** | Level 1, J–STD–020C |


©2012 Littelfuse, Inc.
Specifications are subject to change without notice.
Please refer to www.littelfuse.com/series/za.html for current information.

## Product Dimensions (mm)

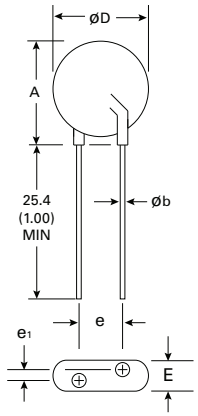


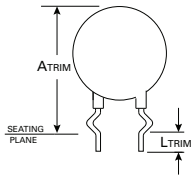


**CRIMPED AND TRIMMED LEAD**
Radial lead types can be supplied with combination preformed crimp and trimmed leads. This option is supplied to the dimensions shown.

*Seating plane interpretation per IEC-717

To order this crimped and trimmed lead style, standard radial type model numbers are changed by replacing the model letter "ZA" with "ZC." This option is supplied in bulk only.

Example:

| Standard Model | Order As |
|---|---|
| V18ZA3P | V18ZC3P |

For crimped leads without trimming and any varitions to the above, contact Littelfuse.

| Dimen-sion | $V_{RMS}$ Voltage Model | 5mm Size | | 7mm Size | | 10mm Size | | 14mm Size | | 20mm Size | |
|---|---|---|---|---|---|---|---|---|---|---|---|
| | | Min. mm (in) | Max. mm (in) | Min. mm (in) | Max. mm (in) | Min. mm (in) | Max. mm (in) | Min. mm (in) | Max. mm (in) | Min. mm (in) | Max. mm (in) |
| **A** | All | - | 10 (0.394) | - | 12 (0.472) | - | 16 (0.630) | - | 20 (0.787) | - | 26.5 (1.043) |
| **ØD** | All | - | 7 (0.276) | - | 9 (0.354) | - | 12.5 (0.492) | - | 17 (0.669) | - | 23 (0.906) |
| **e** (see notes below) | All | 4 (0.157) | 6 (0.236) | 4 (0.157) | 6 (0.236) | 6.5 (0.256) | 8.5 (0.335) | 6.5 (0.256) | 8.5 (0.335) | 6.5 (0.256) (note 1 below) | 8.5 (0.335) (note 1 below) |
| **$e_1$** | V8ZA-V56ZA | 1 (0.039) | 3 (0.118) | 1 (0.039) | 3 (0.118) | 1 (0.039) | 3 (0.118) | 1 (0.039) | 3 (0.118) | 1 (0.039) | 3 (0.118) |
| | V68ZA-V100ZA | 1.5 (0.059) | 3.5 (0.138) | 1.5 (0.059) | 3.5 (0.138) | 1.5 (0.059) | 3.5 (0.138) | 1.5 (0.059) | 3.5 (0.138) | 1.5 (0.059) | 3.5 (0.138) |
| | V120ZA-V180ZA | 1 (0.039) | 3 (0.118) | 1 (0.039) | 3 (0.118) | 1 (0.039) | 3 (0.118) | 1 (0.038) | 3 (0.118) | 1 (0.038) | 3 (0.118) |
| | V205ZA-V750ZA | 1.5 (0.059) | 3.5 (0.138) | - | - | - | - | - | - | - | - |
| **E** | V8ZA-V56ZA | - | 5 (0.197) | - | 5 (0.197) | - | 5 (0.197) | - | 5 (0.197) | - | 5 (0.197) |
| | V68ZA-V100ZA | - | 5.6 (0.220) | - | 5.6 (0.220) | - | 5.6 (0.220) | - | 5.6 (0.220) | - | 5.6 (0.220) |
| | V120ZA-V180ZA | - | 5 (0.197) | - | 5 (0.197) | - | 5 (0.197) | - | 5 (0.197) | - | 5 (0.197) |
| | V205ZA-V750ZA | - | 5.6 (0.220) | - | - | - | - | - | - | - | - |
| **Øb** | All | 0.585 (0.023) | 0.685 (0.027) | 0.585 (0.023) | 0.685 (0.027) | 0.76 (0.030) | 0.86 (0.034) | 0.76 (0.030) | 0.86 (0.034) | 0.76 (0.030) | 0.86 (0.034) |
| **$A_{TRIM}$** | All | - | 13.0 (0.512) | - | 15 (0.591) | - | 19.5 (0.768) | - | 22.5 (0.886) | - | 29.0 (1.142) |
| **$L_{TRIM}$** | All | 2.41 (0.095) | 4.69 (0.185) | 2.41 (0.095) | 4.69 (0.185) | 2.41 (0.095) | 4.69 (0.185) | 2.41 (0.095) | 4.69 (0.185) | 2.41 (0.095) | 4.69 (0.185) |

NOTES: Dimensions in millimeters, inches in parentheses.
1. For 20mm size devices, a 10mm "e" dimension option is also available. Please refer to "Ordering Notes" section "X10" option code for additional information.
2. V24ZA50(P) and V24ZC50(P) only supplied with lead spacing of 6.35mm -/+0.5mm (0.25 -/+0.0196) Dimension e = 5.85 min. Does not apply to Tape and Reel parts.



©2012 Littelfuse, Inc.
Specifications are subject to change without notice.
Please refer to www.littelfuse.com/series/za.html for current information.

Littelfuse®
Expertise Applied | Answers Delivered

## Tape and Reel Specifications

### 5 and 7mm Devices

CRIMPED LEADS "ZT"

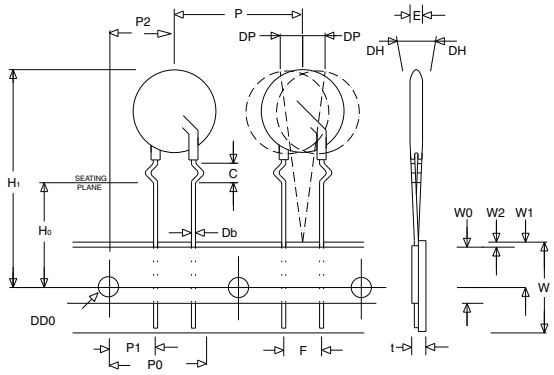


STRAIGHT LEADS "ZS"

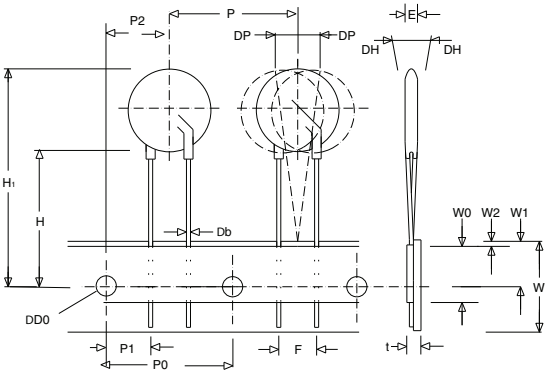


UNDER CRIMPED LEADS "ZU"

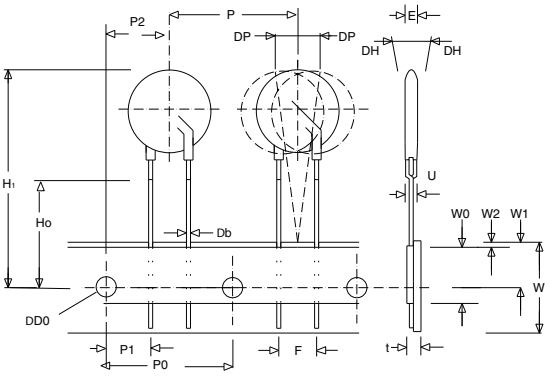


### 10, 14 and 20mm Devices

CRIMPED LEADS "ZT"

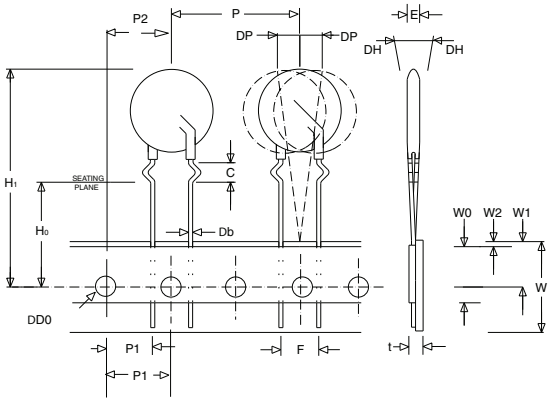


STRAIGHT LEADS "ZS"

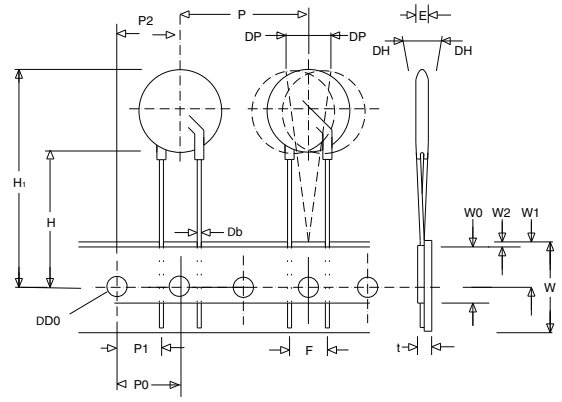


UNDER CRIMPED LEADS "ZU"

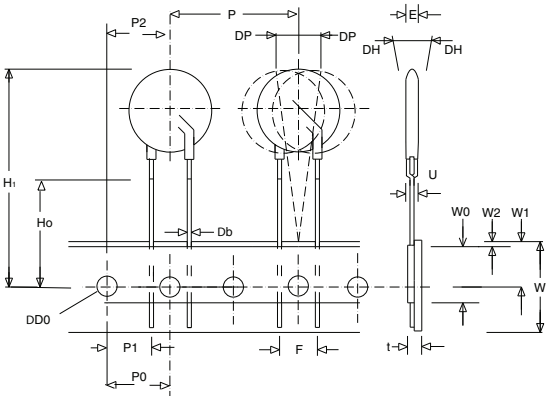




Revision: February 9, 2012

©2012 Littelfuse, Inc.
Specifications are subject to change without notice.
Please refer to www.littelfuse.com/series/za.html for current information.

## Tape and Reel Specifications

- Conforms to ANSI and EIA specifications
- Can be supplied to IEC Publication 286-2
- Radial devices on tape are supplied with crimped leads, straight leads, or under-crimped leads
- 5mm parts are available on tape and reel up to 385 VAC only

NOTE: Leads are offset by Dim e1

| SYMBOL | DESCRIPTION | MODEL SIZE | | | | |
|---|---|---|---|---|---|---|
| | | 5mm | 7mm | 10mm | 14mm | 20mm |
| **P** | Pitch of Component | 12.7 +/- 1.0 | 12.7 +/- 1.0 | 25.4 +/- 1.0 | 25.4 +/- 1.0 | 25.4 +/- 1.0 |
| **$P_0$** | Feed Hole Pitch | 12.7 +/- 0.2 | 12.7 +/- 0.2 | 12.7 +/- 0.2 | 12.7 +/- 0.2 | 12.7 +/- 0.2 |
| **$P_1$** | Feed Hole Center to Pitch | 3.85 +/- 0.7 | 3.85 +/- 0.7 | 8.85 +/- 0.7 | 8.85 +/- 0.7 | 8.85 +/- 0.7 |
| **$P_2$** | Hole Center to Component Center | 6.35 +/- 1.0 | 6.35 +/- 1.0 | 12.7 +/- 0.7 | 12.7 +/- 0.7 | 12.7 +/- 0.7 |
| **F** | Lead to Lead Distance | 5.0 +/- 1.0 | 5.0 +/-1.0 | 7.5 +/- 1.0 | 7.5 +/- 1.0 | 7.5 +/- 1.0 |
| **h** | Component Alignment | 2.0 Max | 2.0 Max | 2.0 Max | 2.0 Max | 2.0 Max |
| **W** | Tape Width | 18.0 +1.0 / -0.5 | 18.0 +1.0 / -0.5 | 18.0 +1.0 / -0.5 | 18.0 +1.0 / -0.5 | 18.0 +1.0 / -0.5 |
| **$W_0$** | Hold Down Tape Width | 12.0 +/- 0.3 | 12.0 +/- 0.3 | 12.0 +/- 0.3 | 12.0 +/- 0.3 | 12.0 +/- 0.3 |
| **$W_1$** | Hole Position | 9.0 +0.75 / -0.50 | 9.0 +0.75 / -0.50 | 9.0 +0.75 / -0.50 | 9.0 +0.75 / -0.50 | 9.0 +0.75 / -0.50 |
| **$W_2$** | Hold Down Tape Position | 0.5 Max | 0.5 Max | 0.5 Max | 0.5 Max | 0.5 Max |
| **H** | Height from Tape Center to Component Base | 18.0 +2.0 / -0.0 | 18.0 +2.0 / -0.0 | 18.0 +2.0 / -0.0 | 18.0 +2.0 / -0.0 | 18.0 +2.0 / -0.0 |
| **$H_0$** | Seating Plane Height | 16.0 +/- 0.5 | 16.0 +/- 0.5 | 16.0 +/- 0.5 | 16.0 +/- 0.5 | 16.0 +/- 0.5 |
| **$H_1$** | Component Height | 29.0 Max | 32.0 Max | 36.0 Max | 40.0 Max | 46.5 Max |
| **$D_0$** | Feed Hole Diameter | 4.0 +/- 0.2 | 4.0 +/- 0.2 | 4.0 +/- 0.2 | 4.0 +/- 0.2 | 4.0 +/- 0.2 |
| **t** | Total Tape Thickness | 0.7 +/- 0.2 | 0.7 +/- 0.2 | 0.7 +/- 0.2 | 0.7 +/- 0.2 | 0.7 +/- 0.2 |
| **U** | Undercrimp Width | 8.0 Max | 8.0 Max | 8.0 Max | 8.0 Max | 8.0 Max |
| **p** | Component Alignment | 3° Max | 3° Max | 3° Max | 3° Max | 3° Max |



©2012 Littelfuse, Inc.
Specifications are subject to change without notice.
Please refer to www.littelfuse.com/series/za.html for current information.

Littelfuse®
Expertise Applied | Answers Delivered

## Part Numbering System

**BASE PART CODES**
(See Ratings & Specifications tables and notes below)

**OPTION CODES**
(See notes below)

**V XXX ZA XX P** | **XXXXX**

**For "VARISTOR"**

**NOMINAL VOLTAGE ($V_{NOM}$)**
(One, Two or Three Digits)

**SERIES + PACKAGING / LEAD STYLE DESIGNATOR**
(See BASE PART CODES notes below)
Z**A** = Bulk Pack / Straight Leads (standard)
Z**C** = Bulk Pack / Crimped and Trimmed Leads
Z**S** = Tape and Reel / Straight Leads
Z**T** = Tape and Reel / Crimped Leads
Z**U** = Tape and Reel / Under-Crimped Leads

**RELATIVE ENERGY INDICATOR**
(One or Two Digits)

**LEAD-FREE, HALOGEN-FREE AND RoHS COMPLIANT INDICATOR**

**See OPTIONS CODES notes below**

For standard parts, use the **BASE PART** designator only.
For parts with non-standard options (such as additional form, packaging and lead space options), use **BASE PART** + **OPTION CODE**.
**OPTION CODE** items are subject to availability and minimum order requirements. Please contact a Littelfuse products representative for additional information or questions

## Ordering Notes:

### BASE PART CODES:

**Series + Packaging / Lead Style Designators:**

Ordering examples:

| Straight Lead Bulk Pack (standard) | Straight Lead Tape & Reel | Crimped Lead Tape & Reel | Crimped & Trimmed Lead Bulk Pack | Under-Crimp Lead Tape & Reel |
|---|---|---|---|---|
| V18**ZA**3P | V18**ZS**3P | V18**ZT**3P | V18**ZC**3P | V18**ZU**3P |

Crimped lead ZA Series varistors are supplied standard in tape and reel, denoted with "ZT."

"ZC" style is supplied in bulk only.

"ZU" style is supplied in tape and reel only.

For crimped leads without trimming and any varitions other than that described above, please contact Littelfuse.

**Packaging and Quantities:**

Littelfuse ZA Series varistors are shipped standard in bulk pack with straight leads and lead spacing outlined in the Package Dimensions section of this data sheet. Contact your Littelfuse sales representative to discuss non-standard options.

Tape & Reel Quantities:

| Device Size | Voltage | Quantity Per Reel | | |
|---|---|---|---|---|
| | | "S" Reel | "T" Reel | "U" Reel |
| 5mm | All | 1000 | 1000 | 1000 |
| 7mm | All | 1000 | 1000 | 1000 |
| 10mm | All | 500 | 500 | 500 |
| 14mm | < 300V | 500 | 500 | 500 |
| 20mm | < 300V | 500 | 500 | 400 |

### OPTION CODES:

**X10:** 10MM LEAD SPACING OPTION --

For 10 -/+1 mm (0.394-/+0.039 in) lead spacing (available on 20mm diameter models only), append standard model BASE PART number with "X10." Example:

| Standard Model | Order As |
|---|---|
| V18ZA40P | V18ZA40P**X10** |

**X2855:** Nickel Barrier COATED WIRE OPTION --

All standard parts use Tin–Coated Copper wire. Nickel Barrier Coated wire is available as an option, consisting of Copper wire with a flashing of Nickel followed by a top coating of Tin. To order append standard model BASE PART number with "X2855." Example:

| Standard Model | Order As |
|---|---|
| V18ZA40P | V18ZA40P**X2855** |

**X1347:** Hi-Temperature phenolic coating option --

Phenolic Coated C-III Series devices are available with improved maximum operating maximum temperature of 125°C.

To order, add X1347 to end of part number (Example: V22ZA3PX1347).

For additional information please refer to the section labeled "Phenolic Coating Option" within this document.



Revision: February 9, 2012

©2012 Littelfuse, Inc.
Specifications are subject to change without notice.
Please refer to www.littelfuse.com/series/za.html for current information.

# OCEAN CHIPS
## Океан Электроники
### Поставка электронных компонентов

Компания «Океан Электроники» предлагает заключение долгосрочных отношений при поставках импортных электронных компонентов на взаимовыгодных условиях!

Наши преимущества:

- Поставка оригинальных импортных электронных компонентов напрямую с производств Америки, Европы и Азии, а так же с крупнейших складов мира;
- Широкая линейка поставок активных и пассивных импортных электронных компонентов (более 30 млн. наименований);
- Поставка сложных, дефицитных, либо снятых с производства позиций;
- Оперативные сроки поставки под заказ (от 5 рабочих дней);
- Экспресс доставка в любую точку России;
- Помощь Конструкторского Отдела и консультации квалифицированных инженеров;
- Техническая поддержка проекта, помощь в подборе аналогов, поставка прототипов;
- Поставка электронных компонентов под контролем ВП;
- Система менеджмента качества сертифицирована по Международному стандарту ISO 9001;
- При необходимости вся продукция военного и аэрокосмического назначения проходит испытания и сертификацию в лаборатории (по согласованию с заказчиком);
- Поставка специализированных компонентов военного и аэрокосмического уровня качества (Xilinx, Altera, Analog Devices, Intersil, Interpoint, Microsemi, Actel, Aeroflex, Peregrine, VPT, Syfer, Eurofarad, Texas Instruments, MS Kennedy, Miteq, Cobham, E2V, MA-COM, Hittite, Mini-Circuits, General Dynamics и др.);

Компания «Океан Электроники» является официальным дистрибьютором и эксклюзивным представителем в России одного из крупнейших производителей разъемов военного и аэрокосмического назначения **«JONHON»**, а так же официальным дистрибьютором и эксклюзивным представителем в России производителя высокотехнологичных и надежных решений для передачи СВЧ сигналов **«FORSTAR»**.

AVIC JONHON

**«JONHON»** (основан в 1970 г.)

Разъемы специального, военного и аэрокосмического назначения:

(Применяются в военной, авиационной, аэрокосмической, морской, железнодорожной, горно- и нефтедобывающей отраслях промышленности)

**«FORSTAR»** (основан в 1998 г.)

ВЧ соединители, коаксиальные кабели, кабельные сборки и микроволновые компоненты:

(Применяются в телекоммуникациях гражданского и специального назначения, в средствах связи, РЛС, а так же военной, авиационной и аэрокосмической отраслях промышленности).

FORSTAR®

Телефон: 8 (812) 309-75-97 (многоканальный)
Факс: 8 (812) 320-03-32
Электронная почта: ocean@oceanchips.ru
Web: http://oceanchips.ru/
Адрес: 198099, г. Санкт-Петербург, ул. Калинина, д. 2, корп. 4, лит. А