Mobile 4th Generation Intel® Core™ Processor Family, Mobile Intel® Pentium® Processor Family, and Mobile Intel® Celeron® Processor Family

Datasheet – Volume 1 of 2

Supporting 4th Generation Intel® Core™ processor based on Mobile U-Processor and Y-Processor Lines

Supporting Mobile Intel® Pentium® and Mobile Intel® Celeron® Processor Families

July 2014

Order No.: 329001-007

INFORMATION IN THIS DOCUMENT IS PROVIDED IN CONNECTION WITH INTEL PRODUCTS. NO LICENSE, EXPRESS OR IMPLIED, BY ESTOPPEL OR OTHERWISE, TO ANY INTELLECTUAL PROPERTY RIGHTS IS GRANTED BY THIS DOCUMENT. EXCEPT AS PROVIDED IN INTEL'S TERMS AND CONDITIONS OF SALE FOR SUCH PRODUCTS, INTEL ASSUMES NO LIABILITY WHATSOEVER AND INTEL DISCLAIMS ANY EXPRESS OR IMPLIED WARRANTY, RELATING TO SALE AND/OR USE OF INTEL PRODUCTS INCLUDING LIABILITY OR WARRANTIES RELATING TO FITNESS FOR A PARTICULAR PURPOSE, MERCHANTABILITY, OR INFRINGEMENT OF ANY PATENT, COPYRIGHT OR OTHER INTELLECTUAL PROPERTY RIGHT.

A "Mission Critical Application" is any application in which failure of the Intel Product could result, directly or indirectly, in personal injury or death. SHOULD YOU PURCHASE OR USE INTEL'S PRODUCTS FOR ANY SUCH MISSION CRITICAL APPLICATION, YOU SHALL INDEMNIFY AND HOLD INTEL AND ITS SUBSIDIARIES, SUBCONTRACTORS AND AFFILIATES, AND THE DIRECTORS, OFFICERS, AND EMPLOYEES OF EACH, HARMLESS AGAINST ALL CLAIMS COSTS, DAMAGES, AND EXPENSES AND REASONABLE ATTORNEYS' FEES ARISING OUT OF, DIRECTLY OR INDIRECTLY, ANY CLAIM OF PRODUCT LIABILITY, PERSONAL INJURY, OR DEATH ARISING IN ANY WAY OUT OF SUCH MISSION CRITICAL APPLICATION, WHETHER OR NOT INTEL OR ITS SUBCONTRACTOR WAS NEGLIGENT IN THE DESIGN, MANUFACTURE, OR WARNING OF THE INTEL PRODUCT OR ANY OF ITS PARTS.

Intel may make changes to specifications and product descriptions at any time, without notice. Designers must not rely on the absence or characteristics of any features or instructions marked "reserved" or "undefined". Intel reserves these for future definition and shall have no responsibility whatsoever for conflicts or incompatibilities arising from future changes to them. The information here is subject to change without notice. Do not finalize a design with this information.

The products described in this document may contain design defects or errors known as errata which may cause the product to deviate from published specifications. Current characterized errata are available on request.

Contact your local Intel sales office or your distributor to obtain the latest specifications and before placing your product order.

This document contains information on products in the design phase of development.

Code Names are only for use by Intel to identify products, platforms, programs, services, etc. ("products") in development by Intel that have not been made commercially available to the public, i.e., announced, launched or shipped. They are never to be used as "commercial" names for products. Also, they are not intended to function as trademarks.

For Enhanced Intel SpeedStep® Technology, see the Processor Spec Finder at http://ark.intel.com/ or contact your Intel representative for more information.

Intel® AES-NI requires a computer system with an AES-NI enabled processor, as well as non-Intel software to execute the instructions in the correct sequence. AES-NI is available on select Intel® processors. For availability, consult your reseller or system manufacturer. For more information, see http://software.intel.com/en-us/articles/intel-advanced-encryption-standard-instructions-aes-ni/.

Intel® Hyper-Threading Technology (Intel® HT Technology) is available on select Intel® Core™ processors. It requires an Intel® HT Technology enabled system. Consult your PC manufacturer. Performance will vary depending on the specific hardware and software used. Not available on Intel® Core™ i5-750. For more information including details on which processors support Intel® HT Technology, visit http://www.intel.com/info/hyperthreading.

Intel® 64 architecture requires a system with a 64-bit enabled processor, chipset, BIOS and software. Performance will vary depending on the specific hardware and software you use. Consult your PC manufacturer for more information. For more information, visit http://www.intel.com/content/www/us/en/architecture-and-technology/microarchitecture/intel-64-architecture-general.html.

No computer system can provide absolute security under all conditions. Intel® Trusted Execution Technology (Intel® TXT) requires a computer with Intel® Virtualization Technology, an Intel TXT-enabled processor, chipset, BIOS, Authenticated Code Modules and an Intel TXT-compatible measured launched environment (MLE). Intel TXT also requires the system to contain a TPM v1.s. For more information, visit http://www.intel.com/technology/security.

Intel® Virtualization Technology (Intel® VT) requires a computer system with an enabled Intel® processor, BIOS, and virtual machine monitor (VMM). Functionality, performance or other benefits will vary depending on hardware and software configurations. Software applications may not be compatible with all operating systems. Consult your PC manufacturer. For more information, visit http://www.intel.com/go/virtualization.

Requires a system with Intel® Turbo Boost Technology. Intel Turbo Boost Technology and Intel Turbo Boost Technology 2.0 are only available on select Intel® processors. Consult your PC manufacturer. Performance varies depending on hardware, software, and system configuration. For more information, visit http://www.intel.com/go/turbo.

Requires activation and a system with a corporate network connection, an Intel® AMT-enabled chipset, network hardware and software. For notebooks, Intel AMT may be unavailable or limited over a host OS-based VPN, when connecting wirelessly, on battery power, sleeping, hibernating or powered off. Results dependent upon hardware, setup and configuration.

Intel, Intel Core, Celeron, Pentium, and the Intel logo are trademarks of Intel Corporation in the U.S. and/or other countries.

*Other names and brands may be claimed as the property of others.

Copyright © 2013–2014, Intel Corporation. All rights reserved.

Contents

Revision History....9

1.0 Introduction....10

1.1 Supported Technologies....11
1.2 Power Management Support....12
1.3 Thermal Management Support....12
1.4 Package Support....13
1.5 Processor Testability....13
1.6 Terminology....13
1.7 Related Documents....16

2.0 Interfaces....17

2.1 System Memory Interface....17
2.1.1 System Memory Technology Supported....17
2.1.2 System Memory Timing Support....19
2.1.3 System Memory Organization Modes....19
2.1.4 System Memory Frequency....20
2.1.5 Intel® Fast Memory Access (Intel® FMA) Technology Enhancements....20
2.1.6 Data Scrambling....21
2.1.7 DRAM Clock Generation....21
2.1.8 DRAM Reference Voltage Generation....21
2.2 Processor Graphics....22
2.3 Processor Graphics Controller (GT)....22
2.3.1 3D and Video Engines for Graphics Processing....22
2.4 Digital Display Interface (DDI)....24
2.5 Platform Environmental Control Interface (PECI)....29
2.5.1 PECI Bus Architecture....29

3.0 Technologies....31

3.1 Intel® Virtualization Technology (Intel® VT)....31
3.2 Intel® Trusted Execution Technology (Intel® TXT)....35
3.3 Intel® Hyper-Threading Technology (Intel® HT Technology)....36
3.4 Intel® Turbo Boost Technology 2.0....37
3.5 Intel® Advanced Vector Extensions 2.0 (Intel® AVX2)....37
3.6 Intel® Advanced Encryption Standard New Instructions (Intel® AES-NI)....38
3.7 Intel® 64 Architecture x2APIC....38
3.8 Power Aware Interrupt Routing (PAIR)....40
3.9 Execute Disable Bit....40
3.10 Intel® Boot Guard....40
3.11 Supervisor Mode Execution Protection (SMEP)....40
3.12 Intel® Transactional Synchronization Extensions - New Instructions (Intel® TSX-NI)....41

4.0 Power Management....42

4.1 Advanced Configuration and Power Interface (ACPI) States Supported....43
4.2 Processor Core Power Management....44
4.2.1 Enhanced Intel® SpeedStep® Technology Key Features....44
4.2.2 Low-Power Idle States....45
4.2.3 Requesting Low-Power Idle States....46
4.2.4 Core C-State Rules....46

4.2.5 Package C-States....48
4.2.6 Package C-States and Display Resolutions....51
4.3 Integrated Memory Controller (IMC) Power Management....53
4.3.1 Disabling Unused System Memory Outputs....53
4.3.2 DRAM Power Management and Initialization....53
4.3.3 DDR Electrical Power Gating (EPG)....56
4.4 Graphics Power Management....56
4.4.1 Intel® Rapid Memory Power Management (Intel® RMPM)....56
4.4.2 Graphics Render C-State....56
4.4.3 Intel® Smart 2D Display Technology (Intel® S2DDT)....57
4.4.4 Intel® Graphics Dynamic Frequency....57
4.4.5 Intel® Display Power Saving Technology (Intel® DPST)....57
4.4.6 Intel® Automatic Display Brightness....58
4.4.7 Intel® Seamless Display Refresh Rate Technology (Intel® SDRRS Technology)....58

5.0 Thermal Management....59
5.1 Thermal Considerations....59
5.2 Intel® Turbo Boost Technology 2.0 Power Monitoring....60
5.3 Intel® Turbo Boost Technology 2.0 Power Control....60
5.3.1 Package Power Control....60
5.3.2 Turbo Time Parameter....61
5.4 Configurable TDP (cTDP) and Low-Power Mode....61
5.4.1 Configurable TDP....61
5.4.2 Low-Power Mode....62
5.5 Thermal and Power Specifications....62
5.6 Thermal Management Features....65
5.6.1 Adaptive Thermal Monitor....65
5.6.2 Digital Thermal Sensor....67
5.6.3 PROCHOT# Signal....68
5.6.4 On-Demand Mode....70
5.6.5 Intel® Memory Thermal Management....70
5.6.6 Scenario Design Power (SDP)....71

6.0 Signal Description....72
6.1 System Memory Interface Signals....72
6.2 Memory Compensation and Miscellaneous Signals....75
6.3 Reset and Miscellaneous Signals....76
6.4 embedded DisplayPort* (eDP*) Signals....77
6.5 Display Interface Signals....77
6.6 Testability Signals....77
6.7 Error and Thermal Protection Signals....78
6.8 Power Sequencing Signals....79
6.9 Processor Power Signals....79
6.10 Sense Signals....80
6.11 Ground and Non-Critical to Function (NCTF) Signals....80
6.12 Processor Internal Pull-Up / Pull-Down Terminations....80

7.0 Electrical Specifications....82
7.1 Integrated Voltage Regulator....82
7.2 Power and Ground Pins....82
7.3 V_{CC} Voltage Identification (VID)....82

7.4 Reserved or Unused Signals..... 87
7.5 Signal Groups.....87
7.6 Test Access Port (TAP) Connection..... 89
7.7 DC Specifications..... 89
7.8 Voltage and Current Specifications..... 90
7.8.1 Platform Environment Control Interface (PECI) DC Characteristics..... 96
7.8.2 Input Device Hysteresis..... 97

8.0 Package Specifications.....98

8.1 Package Mechanical Attributes.....98
8.2 Package Loading Specifications.....98
8.3 Package Storage Specifications.....99

9.0 Processor Ball and Signal Information..... 100

Figures

1 Platform Block Diagram....11
2 Intel® Flex Memory Technology Operations....20
3 Processor Display Architecture for U- and Y- Processor Lines....25
4 DisplayPort* Overview....26
5 HDMI* Overview....27
6 PECI Host-Clients Connection Example....30
7 Device to Domain Mapping Structures....34
8 Processor Power States....42
9 Processor Package and Core C-States....43
10 Idle Power Management Breakdown of the Processor Cores....45
11 Package C-State Entry and Exit....49
12 Package Power Control....61
13 Input Device Hysteresis....97

Tables

1 Terminology.... 13
2 Related Documents.... 16
3 Processor DIMM Support Summary by Product.... 17
4 Supported DDR3L / DDR3L-RS SO-DIMM Module Configurations.... 18
5 Supported LPDDR3 Memory Down Configurations.... 18
6 Supported DDR3L / DDR3L-RS Memory Down Configurations.... 18
7 DRAM System Memory Timing Support.... 19
8 Processor Supported Audio Formats over HDMI*and DisplayPort*.... 27
9 Multiple Display Configuration for U-Processor Line.... 28
10 Multiple Display Configuration for Y-Processor Line.... 28
11 DisplayPort and embedded DisplayPort* Resolutions per Link Data Rate for U-Processor Line.... 29
12 DisplayPort and embedded DisplayPort* Resolutions per Link Data Rate for Y-Processor Line.... 29
13 System States.... 43
14 Processor Core / Package State Support.... 43
15 Integrated Memory Controller States.... 44
16 G, S, and C Interface State Combinations.... 44
17 Coordination of Core Power States at the Package Level.... 49
18 Deepest Package C-State Available – U-Processor Line and Y-Processor Line.... 52
19 Targeted Memory State Conditions.... 55
20 Intel® Turbo Boost Technology 2.0 Package Power Control Settings.... 60
21 Configurable TDP Modes.... 62
22 Thermal Design Power (TDP) Specifications.... 63
23 Junction Temperature Specification.... 64
24 Maximum Idle Power Specification.... 64
25 Signal Description Buffer Types.... 72
26 DDR3L / DDR3L-RS Memory Channel A Interface (Memory-Down / SO-DIMM) Signals.... 72
27 DDR3L / DDR3L-RS Memory Channel B Interface (Memory-Down / SO-DIMM) Signals.... 73
28 LPDDR3 Memory Channel A Interface (Memory-Down) Signals.... 74
29 LPDDR3 Memory Channel B Interface (Memory-Down) Signals.... 75
30 LPDDR3 / DDR3L / DDR3L-RS Reference and Compensation Signals.... 75
31 Reset and Miscellaneous Signals.... 76
32 embedded Display Port* Signals.... 77
33 Display Interface Signals.... 77
34 Testability Signals.... 77
35 Error and Thermal Protection Signals.... 78
36 Power Sequencing Signals.... 79
37 Processor Power Signals.... 79
38 Sense Signals.... 80
39 Ground and Non-Critical to Function (NCTF) Signals.... 80
40 Processor Internal Pull-Up / Pull-Down Terminations.... 80
41 Voltage Regulator (VR) 12.5 Voltage Identification.... 83
42 Signal Groups.... 87
43 Processor Core Active and Idle Mode DC Voltage and Current Specifications.... 90
44 Memory Controller (V_{DDQ}) Supply DC Voltage and Current Specifications.... 91
45 Vcc Sustain (Vcc_{ST}) Supply DC Voltage and Current Specifications.... 91
46 DDR3L / DDR3L-RS Signal Group DC Specifications.... 92
47 LPDDR3 Signal Group DC Specifications.... 93
48 Digital Display Interface Group DC Specifications.... 95
49 embedded DisplayPort* (eDP*) Group DC Specifications.... 95
50 CMOS Signal Group DC Specifications.... 95
51 GTL Signal Group and Open Drain Signal Group DC Specifications.... 95
52 VR Enable CMOS Signal Group DC Specification.... 96

53 VCOMP_OUT and VCCIO_TERM 96
54 Platform Environment Control Interface (PECI) DC Electrical Limits..... 96
55 Package Mechanical Attributes.....98
56 Package Loading Specifications.....98
57 Package Storage Specifications.....99
58 Ball List by Signal Name for DDR3L Configuration.....100
59 Ball List by Signal Name for LPDDR3 Configuration.....112

Revision History

Revision	Description	Date
001	• Initial Release	June 2013
002	• Updated Section 1.1, Supported Technologies • Updated Table 3, Processor DIMM Support Summary by Product • Updated Table 4, Supported DDR3L / DDR3L-RS SO-DIMM Module Configurations • Updated Section 2.4, Digital Display Interface (DDI) • Updated Figure 3, Processor Display Architecture • Updated Table 9, Multiple Display Configuration for U-Processor Line • Added Table 10, Multiple Display Configuration for Y-Processor Line • Updated Table 11, DisplayPort and Embedded DisplayPort* Resolutions per Link Data Rate for U-Processor Line • Added Table 12, DisplayPort and Embedded DisplayPort* Resolutions per Link Data Rate for Y-Processor Line • Updated Table 16, Intel Turbo Boost Technology 2.0 Package Power Control Settings • Updated Table 21, Thermal Design power (TDP) Specifications • Updated Table 23, Package Turbo Parameters	June 2013
003	• Added Mobile 4th Generation Intel® Core™ i7-4610Y, i5-4300Y, i5-4302Y, i7-4600U, i5-4300U, i5-4202Y, i5-4210Y, i3-4012Y, i3-4020Y, i3-4005U processors • Added Mobile Intel® Pentium® 3560Y and 3556U processors • Added Mobile Intel® Celeron® 2980U and 2995U processors • Added Section 4.2.6, "Package C-States and Display Resolutions".	September 2013
004	• Minor edits throughout for clarity	November 2013
005	• Added Mobile Intel® Pentium® 3558U and 3561Y processors • Added Mobile Intel® Celeron® 2981U and 2957U processors	December 2013
006	• Added Mobile 4th Generation Intel® Core™ i7-4510U, i5-4260U, i5-4210U, i3-4120U, i3-4030U, i3-4025U, i5-4220Y, i3-4030Y processors • Updated Section 6.6, Testability Sections. Updated the "Direction/Buffer Type" column in Table 34.	April 2014
007	• Added Mobile 4th Generation Intel® Core™ i7-4578U, i5-4308U, i5-4278U processors	July 2014

1.0 Introduction

The 4th Generation Intel® Core™ processor based on Mobile U-Processor and Y-Processor Lines, Mobile Intel® Pentium® processor family, and Mobile Intel® Celeron® processor family are 64-bit, multi-core processors built on 22-nanometer process technology.

The processors are designed for a one-chip platform consisting of a Multi-Chip Package (MCP) processor that includes a low-power Platform Controller Hub (PCH) die on the same package as the processor die. See the following figure.

Throughout this document, the 4th Generation Intel® Core™ processor based on Mobile U-Processor and Y-Processor Lines, Mobile Intel® Pentium® processor family, and Mobile Intel® Celeron® processor family may be referred to simply as "processor".

Throughout this document, the 4th Generation Intel® Core™ processor based on Mobile U-Processor and Y-Processor Lines refers to the Mobile 4th Generation Intel® Core™i7-4650U, i7-4610Y, i7-4600U, i7-4578U, i7-4558U, i7-4550U, i7-4510U, i7-4500U, i5-4350U, i5-4308U, i5-4302Y, i5-4300Y, i5-4300U, i5-4288U, i5-4278U, i5-4260U, i5-4258U, i5-4250U, i5-4210Y, i5-4210U, i5-4202Y, i5-4200U, i5-4200Y, i3-4158U, i3-4120U, i3-4030Y, i3-4030U, i3-4025U, i5-4220Y, i3-4012Y, i3-4005U, i3-4100U, i3-4010U, and i3-4010Y processors.

Throughout this document, the Mobile Mobile Intel® Pentium® processor family refers to the Intel® Pentium® 3561Y, 3560Y, 3558U, and 3556U processors.

Throughout this document, the Mobile Intel® Celeron® processor family refers to the Intel® Celeron® 2981U, 2980U, 2957U, and 2955U processors.

Note: Some processor features are not available on all platforms. Refer to the processor Specification Update document for details.

Figure 1. Platform Block Diagram

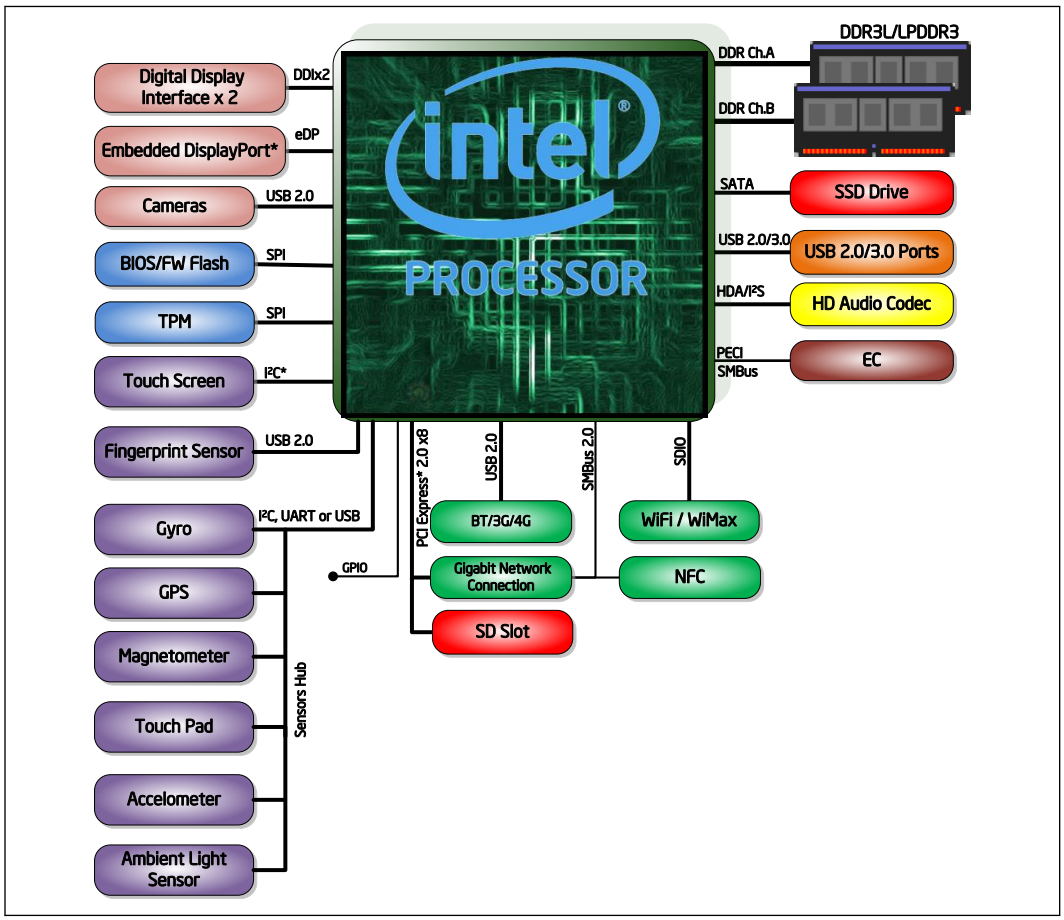

1.1 Supported Technologies

- Intel® Virtualization Technology (Intel® VT)
- Intel® Active Management Technology 9.5 (Intel® AMT 9.5)
- Intel® Trusted Execution Technology (Intel® TXT)
- Intel® Streaming SIMD Extensions 4.2 (Intel® SSE4.2)
- Intel® Hyper-Threading Technology (Intel® HT Technology)
- Intel® 64 Architecture
- Execute Disable Bit
- Intel® Turbo Boost Technology 2.0
- Intel® Advanced Vector Extensions 2.0 (Intel® AVX2)
- Intel® Advanced Encryption Standard New Instructions (Intel® AES-NI)
- PCLMULQDQ Instruction
- Intel® Secure Key

- Intel® Transactional Synchronization Extensions - New Instructions (Intel® TSX-NI)
- PAIR – Power Aware Interrupt Routing
- SMEP – Supervisor Mode Execution Protection
- Boot Guard

Note: The availability of the features may vary between processor SKUs.

1.2 Power Management Support

Processor Core

- Full support of ACPI C-states as implemented by the following processor C-states:
  — C0, C1, C1E, C3, C6, C7, C8, C9, C10
- Enhanced Intel SpeedStep® Technology

System

- S0, S3, S4, S5

Memory Controller

- Conditional self-refresh
- Dynamic power-down

Processor Graphics Controller

- Intel® Rapid Memory Power Management (Intel® RMPM)
- Intel® Smart 2D Display Technology (Intel® S2DDT)
- Graphics Render C-state (RC6)
- Intel® Seamless Display Refresh Rate Switching with eDP port
- Intel® Display Power Saving Technology (Intel® DPST)

1.3 Thermal Management Support

- Digital Thermal Sensor
- Adaptive Thermal Monitor
- THERMTRIP# and PROCHOT# support
- On-Demand Mode
- Memory Open and Closed Loop Throttling
- Memory Thermal Throttling
- External Thermal Sensor (TS-on-DIMM and TS-on-Board)
- Render Thermal Throttling
- Fan speed control with DTS

1.4 Package Support

The processor is available in the following package:

- A 40 mm x 24 mm x 1.5 mm BGA package (BGA1168)

1.5 Processor Testability

The processor includes boundary-scan for board and system level testability.

1.6 Terminology

Table 1. Terminology

Term	Description
APD	Active Power-down
B/D/F	Bus/Device/Function
BGA	Ball Grid Array
BLC	Backlight Compensation
BLT	Block Level Transfer
BPP	Bits per pixel
CKE	Clock Enable
CLTM	Closed Loop Thermal Management
DDI	Digital Display Interface
DDR3	Third-generation Double Data Rate SDRAM memory technology
DDR3L	DDR3 Low Voltage
DDR3L-RS	DDR3 Low Voltage Reduced Standby Power
DLL	Delay-Locked Loop
DMA	Direct Memory Access
DP	DisplayPort*
DTS	Digital Thermal Sensor
EC	Embedded Controller
ECC	Error Correction Code
eDP*	embedded DisplayPort*
EPG	Electrical Power Gating
EU	Execution Unit
FMA	Floating-point fused Multiply Add instructions
FSC	Fan Speed Control
HDCP	High-bandwidth Digital Content Protection
HDMI*	High Definition Multimedia Interface
HFM	High Frequency Mode

continued...

Term	Description
iDCT	Inverse Discrete
IHS	Integrated Heat Spreader
GFX	Graphics
GUI	Graphical User Interface
IMC	Integrated Memory Controller
Intel® 64 Technology	64-bit memory extensions to the IA-32 architecture
Intel® DPST	Intel Display Power Saving Technology
Intel® TSX-NI	Intel Transactional Synchronization Extensions - New Instructions
Intel® TXT	Intel Trusted Execution Technology
Intel® VT	Intel Virtualization Technology. Processor virtualization, when used in conjunction with Virtual Machine Monitor software, enables multiple, robust independent software environments inside a single platform.
Intel® VT-d	Intel Virtualization Technology (Intel VT) for Directed I/O. Intel VT-d is a hardware assist, under system software (Virtual Machine Manager or OS) control, for enabling I/O device virtualization. Intel VT-d also brings robust security by providing protection from errant DMAs by using DMA remapping, a key feature of Intel VT-d.
IOV	I/O Virtualization
ISI	Inter-Symbol Interference
ITPM	Integrated Trusted Platform Module
LFM	Low Frequency Mode. LFM is Pn in the P-state table. It can be read at MSR CEh [47:40].
LFP	Local Flat Panel
LPDDR3	Low-Power Third-generation Double Data Rate SDRAM memory technology
MCP	Multi-Chip Package
MFM	Minimum Frequency Mode. MFM is the minimum ratio supported by the processor and can be read from MSR CEh [55:48].
MLE	Measured Launched Environment
MLC	Mid-Level Cache
MSI	Message Signaled Interrupt
MSL	Moisture Sensitive Labeling
MSR	Model Specific Registers
NCTF	Non-Critical to Function. NCTF locations are typically redundant ground or non-critical reserved, so the loss of the solder joint continuity at end of life conditions will not affect the overall product functionality.
ODT	On-Die Termination
OLTM	Open Loop Thermal Management
PCG	Platform Compatibility Guide (PCG) (previously known as FMB) provides a design target for meeting all planned processor frequency requirements.
PCH	Platform Controller Hub. The chipset with centralized platform capabilities including the main I/O interfaces along with display connectivity, audio features, power management, manageability, security, and storage features.

continued...

Term	Description
PECI	The Platform Environment Control Interface (PECI) is a one-wire interface that provides a communication channel between Intel processor and chipset components to external monitoring devices.
PL1, PL2	Power Limit 1 and Power Limit 2
PPD	Pre-charge Power-down
Processor	The 64-bit multi-core component (package)
Processor Core	The term "processor core" refers to Si die itself, which can contain multiple execution cores. Each execution core has an instruction cache, data cache, and 256-KB L2 cache. All execution cores share the L3 cache.
Processor Graphics	Intel Processor Graphics
Rank	A unit of DRAM corresponding to four to eight devices in parallel, ignoring ECC. These devices are usually, but not always, mounted on a single side of a SO-DIMM.
SCI	System Control Interrupt. SCI is used in the ACPI protocol.
SDP	Scenario Design Power
SF	Strips and Fans
SMM	System Management Mode
SMX	Safer Mode Extensions
Storage Conditions	A non-operational state. The processor may be installed in a platform, in a tray, or loose. Processors may be sealed in packaging or exposed to free air. Under these conditions, processor landings should not be connected to any supply voltages, have any I/Os biased, or receive any clocks. Upon exposure to "free air" (that is, unsealed packaging or a device removed from packaging material), the processor must be handled in accordance with moisture sensitivity labeling (MSL) as indicated on the packaging material.
SVID	Serial Voltage Identification
TAC	Thermal Averaging Constant
TAP	Test Access Point
T_{CASE}	The case temperature of the processor, measured at the geometric center of the top-side of the TTV IHS.
TCC	Thermal Control Circuit
$T_{CONTROL}$	$T_{CONTROL}$ is a static value that is below the TCC activation temperature and used as a trigger point for fan speed control. When DTS > $T_{CONTROL}$, the processor must comply to the TTV thermal profile.
TDP	Thermal Design Power: Thermal solution should be designed to dissipate this target power level. TDP is not the maximum power that the processor can dissipate.
TLB	Translation Look-aside Buffer
TTV	Thermal Test Vehicle. A mechanically equivalent package that contains a resistive heater in the die to evaluate thermal solutions.
TM	Thermal Monitor. A power reduction feature designed to decrease temperature after the processor has reached its maximum operating temperature.
V_{CC}	Processor core power supply
V_{DDQ}	DDR3L and LPDDR3 power supply.
VF	Vertex Fetch
VID	Voltage Identification

continued...

Term	Description
VS	Vertex Shader
VLD	Variable Length Decoding
VMM	Virtual Machine Monitor
VR	Voltage Regulator
V_{SS}	Processor ground

1.7 Related Documents

Table 2. Related Documents

Document	Document Number / Location
Mobile 4th Generation Intel® Core® Processor Family, Mobile Intel® Pentium® Processor Family, and Mobile Intel® Celeron® Processor Family Datasheet, Volume 2 of 2 Supporting 4th Generation Intel® Core® processor based on Mobile U-Processor and Y-Processor Lines	329002
Mobile 4th Generation Intel® Core® Processor Family, Mobile Intel® Pentium® Processor Family, and Mobile Intel® Celeron® Processor Family Specification Update	328903
Mobile 4th Generation Intel® Core® Processor I/O Family Datasheet	329003
Mobile 4th Generation Intel® Core® Processor I/O Family Specification Update	329004
Advanced Configuration and Power Interface 3.0	http://www.acpi.info/
PCI Local Bus Specification 3.0	http://www.pcisig.com/specifications
PCI Express Base Specification, Revision 2.0	http://www.pcisig.com
DDR3 SDRAM Specification	http://www.jedec.org
DisplayPort Specification*	http://www.vesa.org
Intel® 64 and IA-32 Architectures Software Developer's Manuals	http://www.intel.com/products/processor/manuals/index.htm

2.0 Interfaces

2.1 System Memory Interface

- Two channels of DDR3L/DDR3L-RS and LPDDR3 memory with Unbuffered Small Outline Dual In-Line Memory Modules (SO-DIMM) with a maximum of one DIMM per channel and memory down.
- Single-channel and dual-channel memory organization modes
- Data burst length of eight for all memory organization modes
- DDR3L/DDR3L-RS I/O Voltage of 1.35V
- 64-bit wide channels
- Non-ECC, Unbuffered DDR3L/DDR3L-RS SO-DIMMs and memory down
- Theoretical maximum memory bandwidth of:
  - 21.3 GB/s in dual-channel mode assuming DDR3L/DDR3L-RS/LPDDR3 1333 MT/s
  - 25.6 GB/s in dual-channel mode assuming DDR3L/DDR3L-RS/LPDDR3 1600 MT/s

2.1.1 System Memory Technology Supported

The Integrated Memory Controller (IMC) supports DDR3L/DDR3L-RS and LPDDR3 protocols with two independent, 64-bit wide channels. It supports one unbuffered non-ECC DDR3L/DDR3L-RS DIMM per channel; thus, allowing up to two device ranks per channel.

Table 3. Processor DIMM Support Summary by Product

Processors	TDP	Graphics Configuration	DIMM Per Channel	DDR3L / DDR3L-RS (MT/s)	LPDDR3 (MT/s)
U-Processor (Dual-Core)	28W	GT3	1 DPC	1333/1600	N/A
	15W	GT3	1 DPC	1333/1600	1333/1600
		GT2	1 DPC	1333/1600	1333/1600
		GT1	1 DPC	1333/1600	1333/1600
Y-Processor (Dual-Core)	11.5W (6W SDP / 4.5W SDP)	GT1, GT2	1 DPC	1333/1600	1333/1600

Notes: 1. LPDDR3 support may vary between the processor SKUs.
2. DDR3L-RS is supported as a memory configuration. Actual validation checkout depends on parts and vendor availability.

Data Transfer Rates:

- DDR3L-RS is supported as a memory configuration. Actual validation checkout depends on parts and vendor availability.
- 1333 MT/s (PC3-10600)
- 1600 MT/s (PC3-12800)

SO-DIMM Modules:

- Standard 2Gb and 4Gb technologies and addressing are supported for x8 and x16 devices. There is no support for memory modules with different technologies or capacities on opposite sides of the same memory module. If one side of a memory module is populated, the other side is either identical or empty.

LPDDR3 Memory Down:

- Quad Ranked x16
- Single and Dual Ranked x32

Table 4. Supported DDR3L / DDR3L-RS SO-DIMM Module Configurations

Raw Card Version	DIMM Capacity	DRAM Organization	# of DRAM Devices	# of Row/Col Address Bits	# of Banks Inside DRAM	Page Size
A	4 GB	256 M x 16	8	15/10	8	8K
B	4 GB	512 M x 8	8	16/10	8	8K
C	2 GB	256 M x 16	4	15/10	8	8K
F	4 GB	256 M x 8	16	15/10	8	8K
F	8 GB	512 M x 8	16	16/10	8	8K

Table 5. Supported LPDDR3 Memory Down Configurations

DIMM Capacity	PKG Type (Dies bits x PKG bits)	Die Density	PKG Density	Dies Per Channel	PKGs per Channel	Physical Device Rank	Banks Inside DRAM	Page Size
2 GB	SDP 32 x32	4 Gb	4 Gb	2	2	1	8	8K
4 GB	DDP 32 x32	4 Gb	8 Gb	4	2	2	8	8K
8 GB	QDP 16 x32	4 Gb	16 Gb	8	2	2	8	8K
Note: SDP = Single Die Package, DDP = Dual Die Package, QDP = Quad Die Package								

Table 6. Supported DDR3L / DDR3L-RS Memory Down Configurations

System Capacity	DRAM Organization	Dies Per Package	PKG Density	Die Density	Dies Per Channel	PKGs Per Channel	Physical Device Rank	Banks Inside DRAM	Page Size
2 GB	128 M x 16	SDP	2 Gb	2 Gb	4	4	1	8	8K
4 GB	256 M x 16	SDP	4 Gb	4 Gb	4	4	1	8	8K
8 GB	256 M x 16	DDP	8 Gb	4 Gb	8	4	2	8	8K
Note: SDP = Single Die Package, DDP = Dual Die Package									

2.1.2 System Memory Timing Support

The IMC supports the following DDR3L/DDR3L-RS Speed Bin, CAS Write Latency (CWL), and command signal mode timings on the main memory interface:

- tCL = CAS Latency
- tRCD = Activate Command to READ or WRITE Command delay
- tRP = PRECHARGE Command Period
- CWL = CAS Write Latency
- Command Signal modes = 1N indicates a new command may be issued every clock and 2N indicates a new command may be issued every 2 clocks. Command launch mode programming depends on the transfer rate and memory configuration.

Table 7. DRAM System Memory Timing Support

Segment	DRAM Device	Transfer Rate (MT/s)	tCL (tCK)	tRCD (tCK)	tRP (tCK)	CWL (tCK)	DPC (SO-DIMM Only)	CMD Mode
U-Processor / Y-Processor (Dual Core)	DDR3L/ DDR3L-RS	1333	8/9	8/9	8/9	7	1	1N/2N
	LPDDR3	1333	10	12	12	7	1	0.5N
	DDR3L/ DDR3L-RS	1600	10/11	10/11	10/11	8	1	1N/2N
	LPDDR3	1600	12	15	15	8	1	0.5N

2.1.3 System Memory Organization Modes

The Integrated Memory Controller (IMC) supports two memory organization modes – single-channel and dual-channel. Depending upon how the DIMM Modules are populated in each memory channel, a number of different configurations can exist.

Single-Channel Mode

In this mode, all memory cycles are directed to a single-channel. Single-channel mode is used when either Channel A or Channel B DIMM connectors are populated in any order, but not both.

Dual-Channel Mode – Intel® Flex Memory Technology Mode

The IMC supports Intel Flex Memory Technology Mode. Memory is divided into symmetric and asymmetric zones. The symmetric zone starts at the lowest address in each channel and is contiguous until the asymmetric zone begins or until the top address of the channel with the smaller capacity is reached. In this mode, the system runs with one zone of dual-channel mode and one zone of single-channel mode, simultaneously, across the whole memory array.

Note: Channels A and B can be mapped for physical channel 0 and 1 respectively or vice versa; however, channel A size must be greater or equal to channel B size.

Figure 2. Intel® Flex Memory Technology Operations

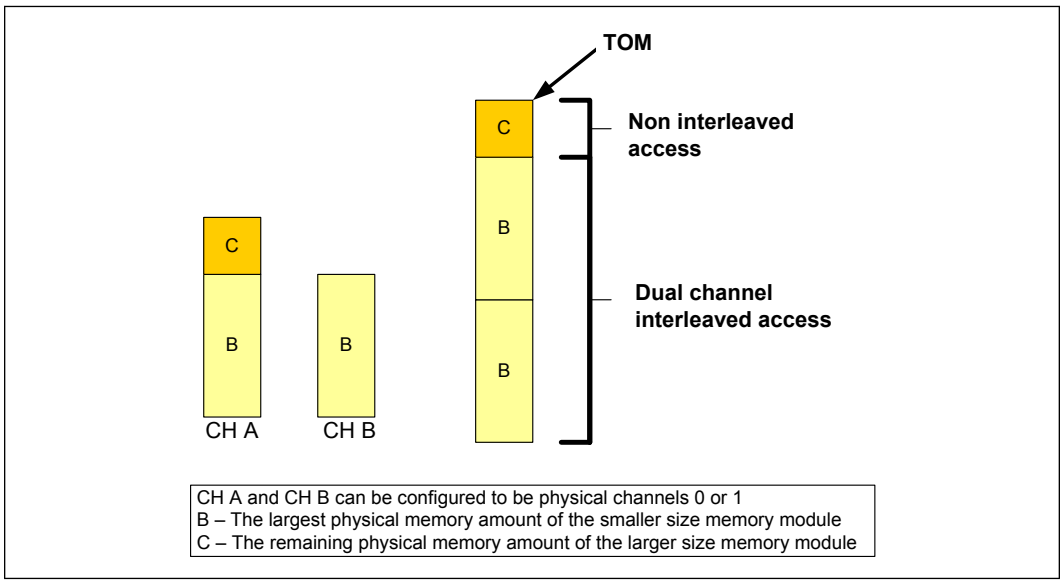

Dual-Channel Symmetric Mode

Dual-Channel Symmetric mode, also known as interleaved mode, provides maximum performance on real world applications. Addresses are ping-ponged between the channels after each cache line (64-byte boundary). If there are two requests, and the second request is to an address on the opposite channel from the first, that request can be sent before data from the first request has returned. If two consecutive cache lines are requested, both may be retrieved simultaneously, since they are ensured to be on opposite channels. Use Dual-Channel Symmetric mode when both Channel A and Channel B DIMM connectors are populated in any order, with the total amount of memory in each channel being the same.

When both channels are populated with the same memory capacity and the boundary between the dual channel zone and the single channel zone is the top of memory, the IMC operates completely in Dual-Channel Symmetric mode.

Note: The DRAM device technology and width may vary from one channel to the other.

2.1.4 System Memory Frequency

In all modes, the frequency of system memory is the lowest frequency of all memory modules placed in the system, as determined through the SPD registers on the memory modules. The system memory controller supports up to two DIMM connectors per channel. If DIMMs with different latency are populated across the channels, the BIOS will use the slower of the two latencies for both channels. For dual-channel mode both channels must have a DIMM connector populated. For single-channel mode, only a single channel can have a DIMM connector populated.

2.1.5 Intel® Fast Memory Access (Intel® FMA) Technology Enhancements

The following sections describe the Just-in-Time Scheduling, Command Overlap, and Out-of-Order Scheduling Intel FMA technology enhancements.

Just-in-Time Command Scheduling

The memory controller has an advanced command scheduler where all pending requests are examined simultaneously to determine the most efficient request to be issued next. The most efficient request is picked from all pending requests and issued to system memory Just-in-Time to make optimal use of Command Overlapping. Thus, instead of having all memory access requests go individually through an arbitration mechanism forcing requests to be executed one at a time, the requests can be started without interfering with the current request allowing for concurrent issuing of requests. This allows for optimized bandwidth and reduced latency while maintaining appropriate command spacing to meet system memory protocol.

Command Overlap

Command Overlap allows the insertion of the DRAM commands between the Activate, Pre-charge, and Read/Write commands normally used, as long as the inserted commands do not affect the currently executing command. Multiple commands can be issued in an overlapping manner, increasing the efficiency of system memory protocol.

Out-of-Order Scheduling

While leveraging the Just-in-Time Scheduling and Command Overlap enhancements, the IMC continuously monitors pending requests to system memory for the best use of bandwidth and reduction of latency. If there are multiple requests to the same open page, these requests would be launched in a back-to-back manner to make optimum use of the open memory page. This ability to reorder requests on the fly allows the IMC to further reduce latency and increase bandwidth efficiency.

2.1.6 Data Scrambling

The system memory controller incorporates a Data Scrambling feature to minimize the impact of excessive di/dt on the platform system memory VRs due to successive 1s and 0s on the data bus. Past experience has demonstrated that traffic on the data bus is not random and can have energy concentrated at specific spectral harmonics creating high di/dt, which is generally limited by data patterns that excite resonance between the package inductance and on die capacitances. As a result, the system memory controller uses a data scrambling feature to create pseudo-random patterns on the system memory data bus to reduce the impact of any excessive di/dt.

2.1.7 DRAM Clock Generation

Every supported DIMM has two differential clock pairs. There are a total of four clock pairs driven directly by the processor to two DIMMs.

2.1.8 DRAM Reference Voltage Generation

The memory controller has the capability of generating the DDR3L/DDR3L-RS Reference Voltage (VREF) internally for both read (RDVREF) and write (VREFDQ) operations. The generated VREF can be changed in small steps, and an optimum VREF value is determined for both during a cold boot through advanced DDR3L/DDR3L-RS training procedures to provide the best voltage and signal margins.

2.2 Processor Graphics

The processor graphics contains a generation 7.5 graphics core architecture. This enables substantial gains in performance and lower power consumption over previous generations. Up to 40 Execution Units are supported depending on the processor SKU.

- Next Generation Intel Clear Video Technology HD Support is a collection of video playback and enhancement features that improve the end user's viewing experience
  - Encode / transcode HD content
  - Playback of high definition content including Blu-ray Disc*
  - Superior image quality with sharper, more colorful images
  - Playback of Blu-ray* disc S3D content using HDMI (1.4a specification compliant with 3D)
- DirectX* Video Acceleration (DXVA) support for accelerating video processing
  - Full AVC/VC1/MPEG2 HW Decode
- Advanced Scheduler 2.0, 1.0, XPDM support
- Windows* 8, Windows* 7, OSX, Linux* operating system support
- DirectX* 11.1, DirectX* 11, DirectX* 10.1, DirectX* 10, DirectX* 9 support.
- OpenGL* 4.0, support

2.3 Processor Graphics Controller (GT)

The Graphics Engine Architecture includes 3D compute elements, Multi-format HW assisted decode/encode pipeline, and Mid-Level Cache (MLC) for superior high definition playback, video quality, and improved 3D performance and media.

The Display Engine handles delivering the pixels to the screen. GSA (Graphics in System Agent) is the primary channel interface for display memory accesses and "PCI-like" traffic in and out.

2.3.1 3D and Video Engines for Graphics Processing

The Gen 7.5 3D engine provides the following performance and power-management enhancements.

3D Pipeline

The 3D graphics pipeline architecture simultaneously operates on different primitives or on different portions of the same primitive. All the cores are fully programmable, increasing the versatility of the 3D Engine.

3D Engine Execution Units

- Supports up to 40 EUs. . The EUs perform 128-bit wide execution per clock.
- Support SIMD8 instructions for vertex processing and SIMD16 instructions for pixel processing.

Vertex Fetch (VF) Stage

The VF stage executes 3DPRIMITIVE commands. Some enhancements have been included to better support legacy D3D APIs as well as SGI OpenGL*.

Vertex Shader (VS) Stage

The VS stage performs shading of vertices output by the VF function. The VS unit produces an output vertex reference for every input vertex reference received from the VF unit, in the order received.

Geometry Shader (GS) Stage

The GS stage receives inputs from the VS stage. Compiled application-provided GS programs, specifying an algorithm to convert the vertices of an input object into some output primitives. For example, a GS shader may convert lines of a line strip into polygons representing a corresponding segment of a blade of grass centered on the line. Or it could use adjacency information to detect silhouette edges of triangles and output polygons extruding out from the edges.

Clip Stage

The Clip stage performs general processing on incoming 3D objects. However, it also includes specialized logic to perform a Clip Test function on incoming objects. The Clip Test optimizes generalized 3D Clipping. The Clip unit examines the position of incoming vertices, and accepts/rejects 3D objects based on its Clip algorithm.

Strips and Fans (SF) Stage

The SF stage performs setup operations required to rasterize 3D objects. The outputs from the SF stage to the Windower stage contain implementation-specific information required for the rasterization of objects and also supports clipping of primitives to some extent.

Windower / IZ (WIZ) Stage

The WIZ unit performs an early depth test, which removes failing pixels and eliminates unnecessary processing overhead.

The Windower uses the parameters provided by the SF unit in the object-specific rasterization algorithms. The WIZ unit rasterizes objects into the corresponding set of pixels. The Windower is also capable of performing dithering, whereby the illusion of a higher resolution when using low-bpp channels in color buffers is possible. Color dithering diffuses the sharp color bands seen on smooth-shaded objects.

Video Engine

The Video Engine handles the non-3D (media/video) applications. It includes support for VLD and MPEG2 decode in hardware.

2D Engine

The 2D Engine contains BLT (Block Level Transfer) functionality and an extensive set of 2D instructions. To take advantage of the 3D during engine's functionality, some BLT functions make use of the 3D renderer.

Logical 128-Bit Fixed BLT and 256 Fill Engine

This BLT engine accelerates the GUI of Microsoft Windows* operating systems. The 128-bit BLT engine provides hardware acceleration of block transfers of pixel data for many common Windows operations. The BLT engine can be used for the following:

- Move rectangular blocks of data between memory locations
- Data alignment
- To perform logical operations (raster ops)

The rectangular block of data does not change, as it is transferred between memory locations. The allowable memory transfers are between: cacheable system memory and frame buffer memory, frame buffer memory and frame buffer memory, and within system memory. Data to be transferred can consist of regions of memory, patterns, or solid color fills. A pattern is always 8 x 8 pixels wide and may be 8, 16, or 32 bits per pixel.

The BLT engine expands monochrome data into a color depth of 8, 16, or 32 bits. BLTs can be either opaque or transparent. Opaque transfers move the data specified to the destination. Transparent transfers compare destination color to source color and write according to the mode of transparency selected.

Data is horizontally and vertically aligned at the destination. If the destination for the BLT overlaps with the source memory location, the BLT engine specifies which area in memory to begin the BLT transfer. Hardware is included for all 256 raster operations (source, pattern, and destination) defined by Microsoft*, including transparent BLT.

The BLT engine has instructions to invoke BLT and stretch BLT operations, permitting software to set up instruction buffers and use batch processing. The BLT engine can perform hardware clipping during BLTs.

2.4 Digital Display Interface (DDI)

- The processor supports:
  - Two Digital Display (x4 DDI) interfaces that can be configured as DisplayPort*, HDMI*. The DisplayPort* can be configured to use 1, 2, or 4 lanes depending on the bandwidth requirements and link data rate of RBR (1.62 GT/s), HBR (2.97 GT/s), and HBR2 (5.4 GT/s). When configured as HDMI*, the DDIx4 port can support 2.97 GT/s.
  - One dedicated x4 embedded DisplayPort* (eDP*). Built-in displays are only supported on eDP.
- The HDMI* interface supports HDMI with 3D, 4K, Deep Color, and x.v.Color. The DisplayPort* interface supports the VESA DisplayPort* Standard Version 1, Revision 2.
- The processor supports High-bandwidth Digital Content Protection (HDCP) for high-definition content playback over digital interfaces.
- The processor also integrates dedicated a Mini HD audio controller to drive audio on integrated digital display interfaces, such as HDMI* and DisplayPort*. The HD audio controller on the PCH would continue to support down CODECs, and so on. The processor Mini HD audio controller supports two High-Definition Audio streams simultaneously on any of the three digital ports.

- The processor supports streaming any 3 independent and simultaneous display combination of DisplayPort*/HDMI*/eDP*/ monitors. In the case of 3 simultaneous displays, two High Definition Audio streams over the digital display interfaces are supported.
- Each digital port is capable of driving resolutions up to 3200x2000 at 60 Hz through DisplayPort* and 4096x2304 at 24 Hz using HDMI*.
- DisplayPort* Aux CH, DDC channel, Panel power sequencing, and HPD are supported through the PCH.

Figure 3. Processor Display Architecture for U- and Y- Processor Lines

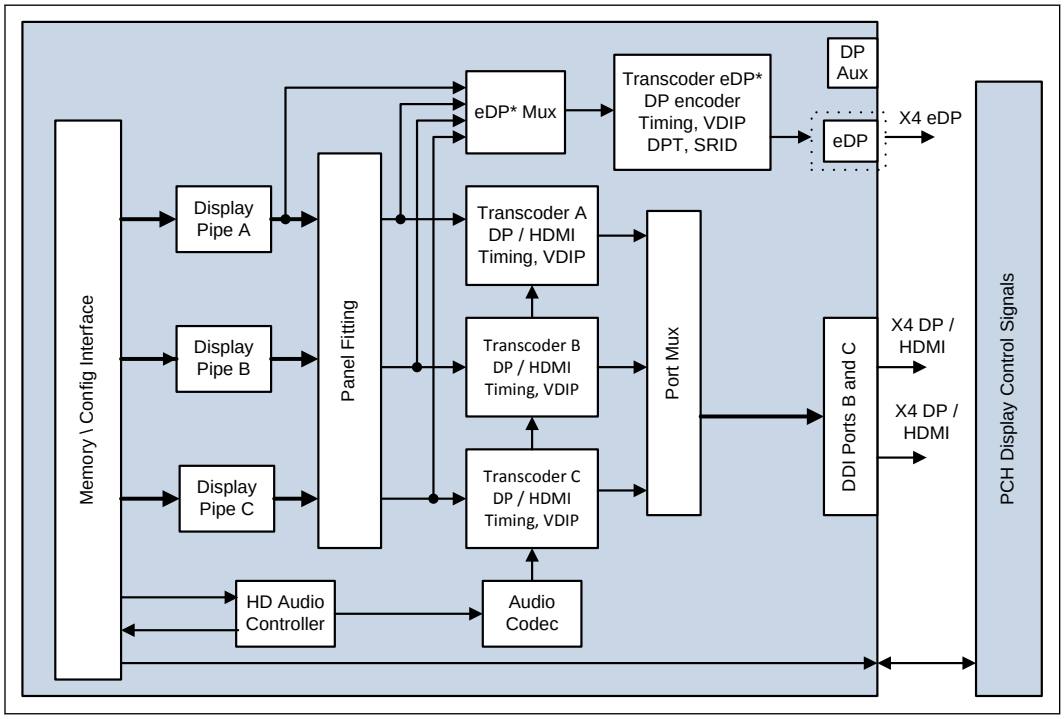

Display is the presentation stage of graphics. This involves:

- Pulling rendered data from memory
- Converting raw data into pixels
- Blending surfaces into a frame
- Organizing pixels into frames
- Optionally scaling the image to the desired size
- Re-timing data for the intended target
- Formatting data according to the port output standard

DisplayPort*

DisplayPort* is a digital communication interface that uses differential signaling to achieve a high-bandwidth bus interface designed to support connections between PCs and monitors, projectors, and TV displays.

A DisplayPort* consists of a Main Link, Auxiliary channel, and a Hot-Plug Detect signal. The Main Link is a unidirectional, high-bandwidth, and low latency channel used for transport of isochronous data streams such as uncompressed video and audio. The Auxiliary Channel (AUX CH) is a half-duplex bidirectional channel used for link management and device control. The Hot-Plug Detect (HPD) signal serves as an interrupt request for the sink device.

The processor is designed in accordance with the VESA DisplayPort* Standard Version 1.2a. The processor supports *VESA DisplayPort* PHY Compliance Test Specification 1.2a* and *VESA DisplayPort* Link Layer Compliance Test Specification 1.2a*.

Figure 4. DisplayPort* Overview

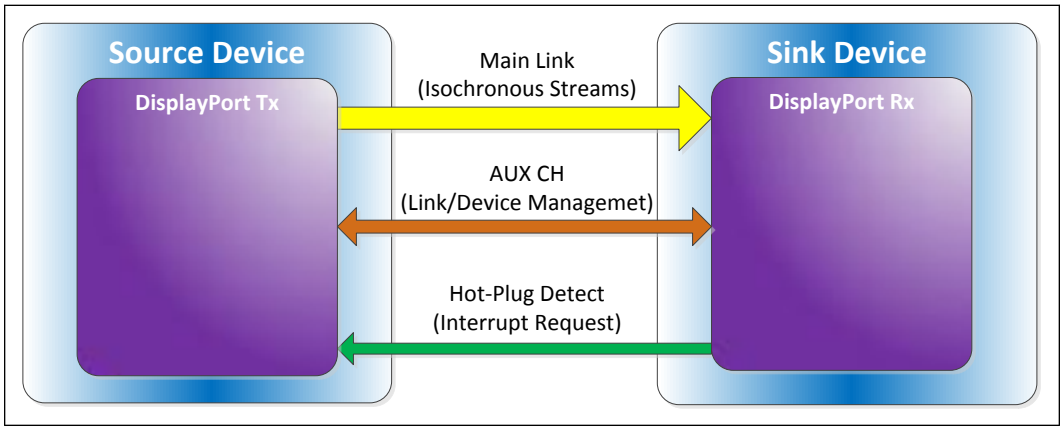

High-Definition Multimedia Interface (HDMI*)

The High-Definition Multimedia Interface* (HDMI*) is provided for transmitting uncompressed digital audio and video signals from DVD players, set-top boxes, and other audiovisual sources to television sets, projectors, and other video displays. It can carry high quality multi-channel audio data and all standard and high-definition consumer electronics video formats. The HDMI display interface connecting the processor and display devices uses transition minimized differential signaling (TMDS) to carry audiovisual information through the same HDMI cable.

HDMI includes three separate communications channels — TMDS, DDC, and the optional CEC (consumer electronics control). CEC is not supported on the processor. As shown in the following figure, the HDMI cable carries four differential pairs that make up the TMDS data and clock channels. These channels are used to carry video, audio, and auxiliary data. In addition, HDMI carries a VESA DDC. The DDC is used by an HDMI Source to determine the capabilities and characteristics of the Sink.

Audio, video, and auxiliary (control/status) data is transmitted across the three TMDS data channels. The video pixel clock is transmitted on the TMDS clock channel and is used by the receiver for data recovery on the three data channels. The digital display data signals driven natively through the PCH are AC coupled and needs level shifting to convert the AC coupled signals to the HDMI compliant digital signals.

The processor HDMI interface is designed in accordance with the High-Definition Multimedia Interface with 3D, 4K, Deep Color, and x.v.Color.

Figure 5. HDMI* Overview

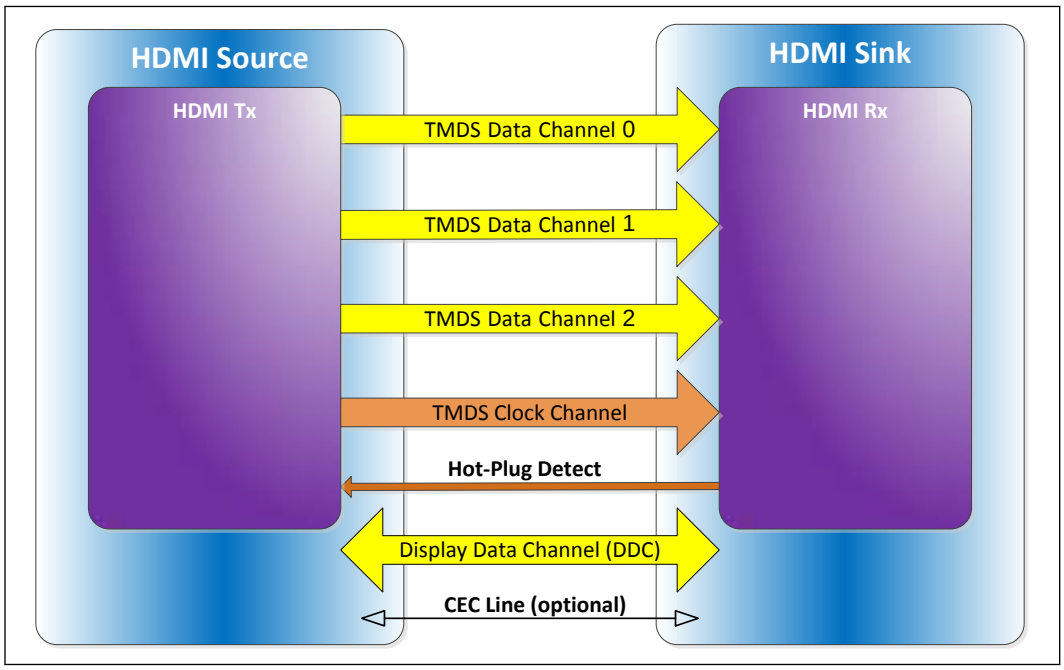

embedded DisplayPort*

The embedded DisplayPort* (eDP*) is an embedded version of the DisplayPort standard oriented towards applications such as notebook and All-In-One PCs. Like DisplayPort, embedded DisplayPort also consists of a Main Link, Auxiliary channel, and an optional Hot-Plug Detect signal.

Integrated Audio

- HDMI and display port interfaces carry audio along with video.
- Processor supports two DMA controllers to output two High Definition audio streams on two digital ports simultaneously.
- Supports only the internal HDMI and DP CODECs.

Table 8. Processor Supported Audio Formats over HDMI*and DisplayPort*

Audio Formats	HDMI*	DisplayPort*
AC-3 Dolby* Digital	Yes	Yes
Dolby Digital Plus	Yes	Yes
DTS-HD*	Yes	Yes
LPCM, 192 kHz/24 bit, 8 Channel	Yes	Yes
Dolby TrueHD, DTS-HD Master Audio* (Lossless Blu-Ray Disc* Audio Format)	Yes	Yes

The processor will continue to support Silent stream. Silent stream is an integrated audio feature that enables short audio streams, such as system events to be heard over the HDMI and DisplayPort monitors. The processor supports silent streams over the HDMI and DisplayPort interfaces at 44.1 kHz, 48 kHz, 88.2 kHz, 96 kHz, 176.4 kHz, and 192 kHz sampling rates.

Multiple Display Configurations

The following multiple display configuration modes are supported (with appropriate driver software):

- Single Display is a mode with one display port activated to display the output to one display device.
- Intel Display Clone is a mode with up to three display ports activated to drive the display content of same color depth setting but potentially different refresh rate and resolution settings to all the active display devices connected.
- Extended Desktop is a mode with up to three display ports activated to drive the content with potentially different color depth, refresh rate, and resolution settings on each of the active display devices connected.

The digital ports on the processor can be configured to support DisplayPort*/HDMI. The following table shows examples of valid three display configurations through the processor.

Table 9. Multiple Display Configuration for U-Processor Line

Display 1	Display 2	Display 3	Maximum Resolution Display 1	Maximum Resolution Display 2	Maximum Resolution Display 3
HDMI	HDMI	eDP	4096x2304 @ 24 Hz		3200x2000 @ 60 Hz
DP	DP	eDP	3200x2000 @ 60 Hz		3200x2000 @ 60 Hz
HDMI	DP	eDP	4096x2304 @ 24Hz	3200x2000 @ 60 Hz	3200x2000 @ 60 Hz
Note: DP and eDP resolutions in this table are supported for 4 lanes with link data rate HBR2 at 24 bits per pixel (bpp) and single stream mode of operation.					

Table 10. Multiple Display Configuration for Y-Processor Line

Display 1	Display 2	Display 3	Maximum Resolution Display 1	Maximum Resolution Display 2	Maximum Resolution Display 3
HDMI	HDMI	eDP	4096x2304 @ 24 Hz		2880x1620 @ 60 Hz
DP	DP	eDP	2880x1620 @ 60 Hz		2880x1620 @ 60 Hz
HDMI	DP	eDP	4096x2304 @ 24 Hz	2880x1620 @ 60 Hz	2880x1620 @ 60 Hz
Note: 1. DP and eDP resolutions in this table are supported for 4 lanes with link data rate HBR2 at 24 bits per pixel (bpp) and single stream mode of operation.					

Table 11. DisplayPort and embedded DisplayPort* Resolutions per Link Data Rate for U-Processor Line

Link Data Rate	Lane Count		
	1	2	4
RBR	1064x600	1400x1050	2240x1400
HBR	1280x960	1920x1200	2880x1800
HBR2	1920x1200	2880x1800	3200x2000
Note: The above resolutions are valid at 60 Hz refresh rate and 24 bits per pixel (bpp).			

Table 12. DisplayPort and embedded DisplayPort* Resolutions per Link Data Rate for Y-Processor Line

Link Data Rate	Lane Count		
	1	2	4
RBR	1064x600	1400x1050	2240x1400
HBR	1280x960	1920x1200	2880x1620 @ 60 Hz
Note: The above resolutions are valid at 60 Hz refresh rate and 24 bits per pixel (bpp).			

High-bandwidth Digital Content Protection (HDCP)

HDCP is the technology for protecting high-definition content against unauthorized copy or unreceptive between a source (computer, digital set top boxes, and so on) and the sink (panels, monitor, and TVs). The processor supports HDCP 1.4 for content protection over wired displays (HDMI* and DisplayPort*).

The HDCP 1.4 keys are integrated into the processor and customers are not required to physically configure or handle the keys.

2.5 Platform Environmental Control Interface (PECI)

PECI is an Intel proprietary interface that provides a communication channel between Intel processors and external components, like Super I/O (SIO) and Embedded Controllers (EC), to provide processor temperature, Turbo, Configurable TDP, and memory throttling control mechanisms and many other services. PECI is used for platform thermal management and real time control and configuration of processor features and performance.

2.5.1 PECI Bus Architecture

The PECI architecture is based on a wired-OR bus that the clients (as processor PECI) can pull up high (with strong drive).

The idle state on the bus is near zero.

The following figure demonstrates PECI design and connectivity. While the host/ originator can be a third party PECI host, one of the PECI clients is a processor PECI device.

Figure 6. PECI Host-Clients Connection Example

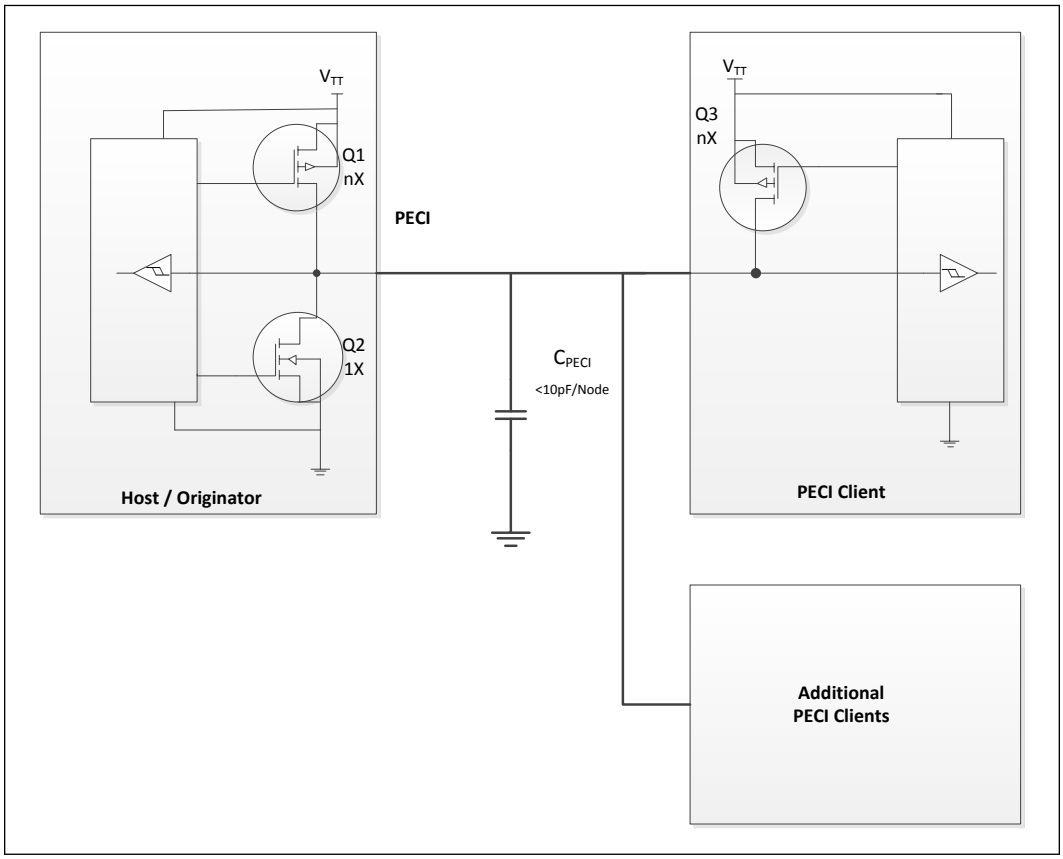

3.0 Technologies

This chapter provides a high-level description of Intel technologies implemented in the processor.

The implementation of the features may vary between the processor SKUs.

Details on the different technologies of Intel processors and other relevant external notes are located at the Intel technology web site: http://www.intel.com/technology/

3.1 Intel® Virtualization Technology (Intel® VT)

Intel® Virtualization Technology (Intel® VT) makes a single system appear as multiple independent systems to software. This allows multiple, independent operating systems to run simultaneously on a single system. Intel VT comprises technology components to support virtualization of platforms based on Intel architecture microprocessors and chipsets.

Intel® Virtualization Technology (Intel® VT) for IA-32, Intel® 64 and Intel® Architecture (Intel® VT-x) added hardware support in the processor to improve the virtualization performance and robustness. Intel® Virtualization Technology for Directed I/O (Intel VT-d) extends Intel® VT-x by adding hardware assisted support to improve I/O device virtualization performance.

Intel® VT-x specifications and functional descriptions are included in the *Intel® 64 and IA-32 Architectures Software Developer's Manual, Volume 3B* and is available at:

http://www.intel.com/products/processor/manuals/index.htm

The Intel VT-d specification and other Intel VT documents can be referenced at:

http://www.intel.com/technology/virtualization/index.htm

https://sharedspaces.intel.com/sites/PCDC/SitePages/Ingredients/ingredient.aspx?ing=VT

Intel® VT-x Objectives

Intel VT-x provides hardware acceleration for virtualization of IA platforms. Virtual Machine Monitor (VMM) can use Intel VT-x features to provide an improved reliable virtualized platform. By using Intel VT-x, a VMM is:

- **Robust:** VMMs no longer need to use paravirtualization or binary translation. This means that off-the-shelf operating systems and applications can be run without any special steps.
- **Enhanced:** Intel VT enables VMMs to run 64-bit guest operating systems on IA x86 processors.

- **More reliable:** Due to the hardware support, VMMs can now be smaller, less complex, and more efficient. This improves reliability and availability and reduces the potential for software conflicts.
- **More secure:** The use of hardware transitions in the VMM strengthens the isolation of VMs and further prevents corruption of one VM from affecting others on the same system.

Intel® VT-x Features

The processor supports the following Intel VT-x features:

- Extended Page Table (EPT) Accessed and Dirty Bits
  - EPT A/D bits enabled VMMs to efficiently implement memory management and page classification algorithms to optimize VM memory operations, such as de-fragmentation, paging, live migration, and check-pointing. Without hardware support for EPT A/D bits, VMMs may need to emulate A/D bits by marking EPT paging-structures as not-present or read-only, and incur the overhead of EPT page-fault VM exits and associated software processing.
- Extended Page Table Pointer (EPTP) switching
  - EPTP switching is a specific VM function. EPTP switching allows guest software (in VMX non-root operation, supported by EPT) to request a different EPT paging-structure hierarchy. This is a feature by which software in VMX non-root operation can request a change of EPTP without a VM exit. Software can choose among a set of potential EPTP values determined in advance by software in VMX root operation.
- Pause loop exiting
  - Support VMM schedulers seeking to determine when a virtual processor of a multiprocessor virtual machine is not performing useful work. This situation may occur when not all virtual processors of the virtual machine are currently scheduled and when the virtual processor in question is in a loop involving the PAUSE instruction. The new feature allows detection of such loops and is thus called PAUSE-loop exiting.

The processor core supports the following Intel VT-x features:

- Extended Page Tables (EPT)
  - EPT is hardware assisted page table virtualization.
  - It eliminates VM exits from the guest operating system to the VMM for shadow page-table maintenance.
- Virtual Processor IDs (VPID)
  - Ability to assign a VM ID to tag processor core hardware structures (such as TLBs).
  - This avoids flushes on VM transitions to give a lower-cost VM transition time and an overall reduction in virtualization overhead.
- Guest Preemption Timer
  - Mechanism for a VMM to preempt the execution of a guest operating system after an amount of time specified by the VMM. The VMM sets a timer value before entering a guest.
  - The feature aids VMM developers in flexibility and Quality of Service (QoS) guarantees.

- Descriptor-Table Exiting
  - Descriptor-table exiting allows a VMM to protect a guest operating system from an internal (malicious software based) attack by preventing relocation of key system data structures like IDT (interrupt descriptor table), GDT (global descriptor table), LDT (local descriptor table), and TSS (task segment selector).
  - A VMM using this feature can intercept (by a VM exit) attempts to relocate these data structures and prevent them from being tampered by malicious software.

Intel® VT-d Objectives

The key Intel VT-d objectives are domain-based isolation and hardware-based virtualization. A domain can be abstractly defined as an isolated environment in a platform to which a subset of host physical memory is allocated. Intel VT-d provides accelerated I/O performance for a virtualized platform and provides software with the following capabilities:

- I/O device assignment and security: for flexibly assigning I/O devices to VMs and extending the protection and isolation properties of VMs for I/O operations.
- DMA remapping: for supporting independent address translations for Direct Memory Accesses (DMA) from devices.
- Interrupt remapping: for supporting isolation and routing of interrupts from devices and external interrupt controllers to appropriate VMs.
- Reliability: for recording and reporting to system software DMA and interrupt errors that may otherwise corrupt memory or impact VM isolation.

Intel VT-d accomplishes address translation by associating a transaction from a given I/O device to a translation table associated with the Guest to which the device is assigned. It does this by means of the data structure in the following illustration. This table creates an association between the device's PCI Express* Bus/Device/Function (B/D/F) number and the base address of a translation table. This data structure is populated by a VMM to map devices to translation tables in accordance with the device assignment restrictions above, and to include a multi-level translation table (VT-d Table) that contains Guest specific address translations.

Figure 7. Device to Domain Mapping Structures

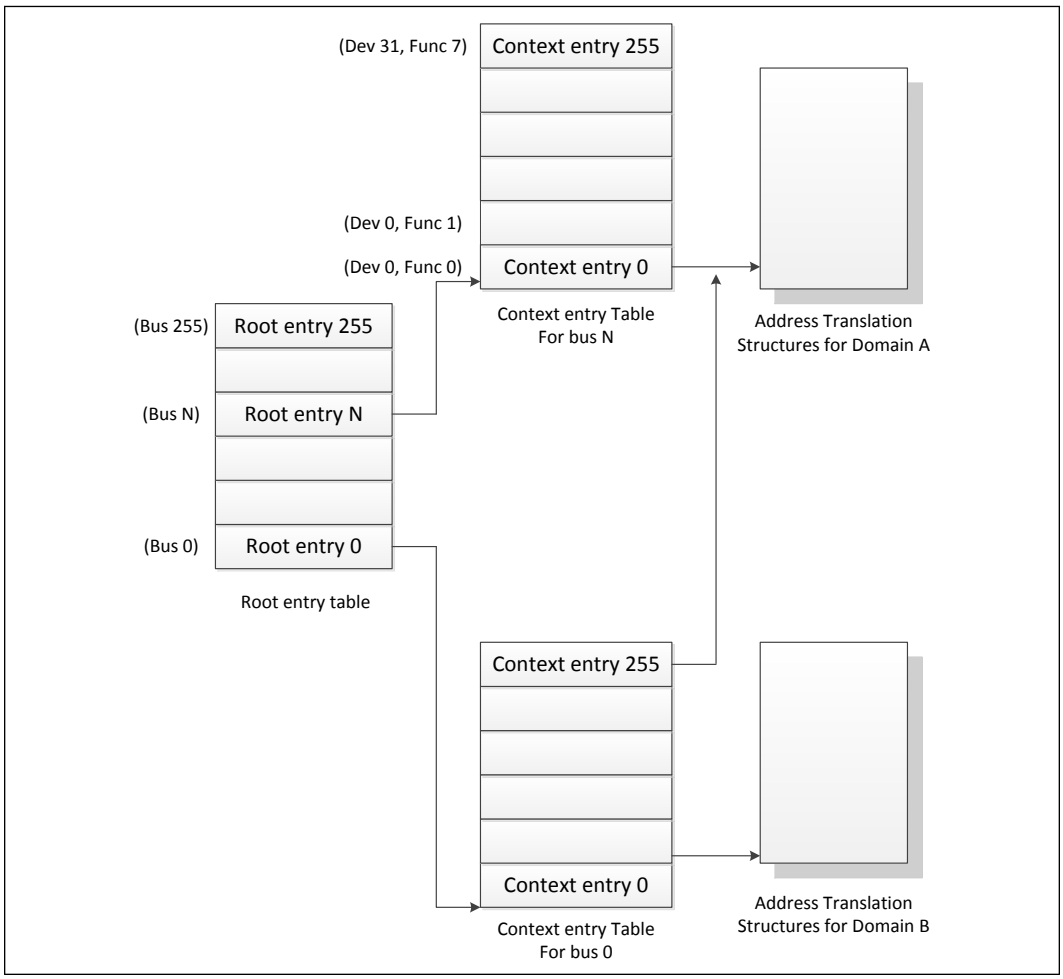

Intel VT-d functionality, often referred to as an Intel VT-d Engine, has typically been implemented at or near a PCI Express host bridge component of a computer system. This might be in a chipset component or in the PCI Express functionality of a processor with integrated I/O. When one such Intel VT-d engine receives a PCI Express transaction from a PCI Express bus, it uses the B/D/F number associated with the transaction to search for an Intel VT-d translation table. In doing so, it uses the B/D/F number to traverse the data structure shown in the above figure. If it finds a valid Intel VT-d table in this data structure, it uses that table to translate the address provided on the PCI Express bus. If it does not find a valid translation table for a given translation, this results in an Intel VT-d fault. If Intel VT-d translation is required, the Intel VT-d engine performs an N-level table walk.

For more information, refer to *Intel® Virtualization Technology for Directed I/O Architecture Specification* http://download.intel.com/technology/computing/vptech/Intel(r)_VT_for_Direct_IO.pdf

Intel® VT-d Features

The processor supports the following Intel VT-d features:

- Memory controller and processor graphics comply with the Intel VT-d 1.2 Specification
- Two Intel VT-d DMA remap engines
  - iGFX DMA remap engine
  - Default DMA remap engine (covers all devices except iGFX)
- Support for root entry, context entry, and default context
- 39-bit guest physical address and host physical address widths
- Support for 4 KB page sizes
- Support for register-based fault recording only (for single entry only) and support for MSI interrupts for faults
- Support for both leaf and non-leaf caching
- Support for boot protection of default page table
- Support for non-caching of invalid page table entries
- Support for hardware-based flushing of translated but pending writes and pending reads, on IOTLB invalidation
- Support for Global, Domain specific, and Page specific IOTLB invalidation
- MSI cycles (MemWr to address FEEx_xxxxh) not translated
  - Translation faults result in cycle forwarding to VBIOS region (byte enables masked for writes). Returned data may be bogus for internal agents; PEG/DMI interfaces return unsupported request status
- Interrupt remapping is supported
- Queued invalidation is supported
- Intel VT-d translation bypass address range is supported (Pass Through)

The processor supports the following added new Intel VT-d features:

- 4-level Intel VT-d Page walk: Both default Intel VT-d engine, as well as the IGD Intel VT-d engine, are upgraded to support 4-level Intel VT-d tables (adjusted guest address width 48 bits)
- Intel VT-d superpage: support of Intel VT-d superpage (2 MB, 1 GB) for the default Intel VT-d engine (that covers all devices except IGD)

  IGD Intel VT-d engine does not support superpage and BIOS should disable superpage in default Intel VT-d engine when iGFX is enabled.

Note: Intel VT-d Technology may not be available on all SKUs.

3.2 Intel® Trusted Execution Technology (Intel® TXT)

Intel Trusted Execution Technology (Intel TXT) defines platform-level enhancements that provide the building blocks for creating trusted platforms.

The Intel TXT platform helps to provide the authenticity of the controlling environment such that those wishing to rely on the platform can make an appropriate trust decision. The Intel TXT platform determines the identity of the controlling environment by accurately measuring and verifying the controlling software.

Another aspect of the trust decision is the ability of the platform to resist attempts to change the controlling environment. The Intel TXT platform will resist attempts by software processes to change the controlling environment or bypass the bounds set by the controlling environment.

Intel TXT is a set of extensions designed to provide a measured and controlled launch of system software that will then establish a protected environment for itself and any additional software that it may execute.

These extensions enhance two areas:

- The launching of the Measured Launched Environment (MLE).
- The protection of the MLE from potential corruption.

The enhanced platform provides these launch and control interfaces using Safer Mode Extensions (SMX).

The SMX interface includes the following functions:

- Measured/Verified launch of the MLE.
- Mechanisms to ensure the above measurement is protected and stored in a secure location.
- Protection mechanisms that allow the MLE to control attempts to modify itself.

The processor also offers additional enhancements to System Management Mode (SMM) architecture for enhanced security and performance. The processor provides new MSRs to:

- Enable a second SMM range
- Enable SMM code execution range checking
- Select whether SMM Save State is to be written to legacy SMRAM or to MSRs
- Determine if a thread is going to be delayed entering SMM
- Determine if a thread is blocked from entering SMM
- Targeted SMI, enable/disable threads from responding to SMIs both VLWs and IPI

For the above features, BIOS must test the associated capability bit before attempting to access any of the above registers.

For more information, refer to the Intel® Trusted Execution Technology Measured Launched Environment Programming Guide.

3.3 Intel® Hyper-Threading Technology (Intel® HT Technology)

The processor supports Intel Hyper-Threading Technology (Intel HT Technology) that allows an execution core to function as two logical processors. While some execution resources, such as caches, execution units, and buses are shared, each logical processor has its own architectural state with its own set of general-purpose registers and control registers. This feature must be enabled using the BIOS and requires operating system support.

Intel recommends enabling Intel HT Technology with Microsoft Windows* 8 and Microsoft Windows* 7 and disabling Intel HT Technology using the BIOS for all previous versions of Windows* operating systems. For more information on Intel HT Technology, see http://www.intel.com/technology/platform-technology/hyper-threading/.

3.4 Intel® Turbo Boost Technology 2.0

The Intel Turbo Boost Technology 2.0 allows the processor core to opportunistically and automatically run faster than its rated operating frequency/render clock, if it is operating below power, temperature, and current limits. The Intel Turbo Boost Technology 2.0 feature is designed to increase performance of both multi-threaded and single-threaded workloads.

Compared with previous generation products, Intel Turbo Boost Technology 2.0 will increase the ratio of application power to TDP. Thus, thermal solutions and platform cooling that are designed to less than thermal design guidance might experience thermal and performance issues since more applications will tend to run at the maximum power limit for significant periods of time.

Note: Intel Turbo Boost Technology 2.0 may not be available on all SKUs.

Intel® Turbo Boost Technology 2.0 Frequency

To determine the highest performance frequency amongst active cores, the processor takes the following into consideration:

- The number of cores operating in the C0 state.
- The estimated core current consumption.
- The estimated package prior and present power consumption.
- The package temperature.

Any of these factors can affect the maximum frequency for a given workload. If the power, current, or thermal limit is reached, the processor will automatically reduce the frequency to stay within its TDP limit. Turbo processor frequencies are only active if the operating system is requesting the P0 state. For more information on P-states and C-states, see Power Management on page 42.

3.5 Intel® Advanced Vector Extensions 2.0 (Intel® AVX2)

Intel Advanced Vector Extensions 2.0 (Intel AVX2) is the latest expansion of the Intel instruction set. Intel AVX2 extends the Intel Advanced Vector Extensions (Intel AVX) with 256-bit integer instructions, floating-point fused multiply add (FMA) instructions, and gather operations. The 256-bit integer vectors benefit math, codec, image, and digital signal processing software. FMA improves performance in face detection, professional imaging, and high performance computing. Gather operations increase vectorization opportunities for many applications. In addition to the vector extensions, this generation of Intel processors adds new bit manipulation instructions useful in compression, encryption, and general purpose software.

For more information on Intel AVX, see http://www.intel.com/software/avx

3.6 Intel® Advanced Encryption Standard New Instructions (Intel® AES-NI)

The processor supports Intel Advanced Encryption Standard New Instructions (Intel AES-NI) that are a set of Single Instruction Multiple Data (SIMD) instructions that enable fast and secure data encryption and decryption based on the Advanced Encryption Standard (AES). Intel AES-NI are valuable for a wide range of cryptographic applications, such as applications that perform bulk encryption/ decryption, authentication, random number generation, and authenticated encryption. AES is broadly accepted as the standard for both government and industry applications, and is widely deployed in various protocols.

Intel AES-NI consists of six Intel SSE instructions. Four instructions, AESENC, AESENCLAST, AESDEC, and AESDELAST facilitate high performance AES encryption and decryption. The other two, AESIMC and AESKEYGENASSIST, support the AES key expansion procedure. Together, these instructions provide a full hardware for supporting AES; offering security, high performance, and a great deal of flexibility.

PCLMULQDQ Instruction

The processor supports the carry-less multiplication instruction, PCLMULQDQ. PCLMULQDQ is a Single Instruction Multiple Data (SIMD) instruction that computes the 128-bit carry-less multiplication of two, 64-bit operands without generating and propagating carries. Carry-less multiplication is an essential processing component of several cryptographic systems and standards. Hence, accelerating carry-less multiplication can significantly contribute to achieving high speed secure computing and communication.

Intel® Secure Key

The processor supports Intel® Secure Key (formerly known as Digital Random Number Generator (DRNG)), a software visible random number generation mechanism supported by a high quality entropy source. This capability is available to programmers through the RDRAND instruction. The resultant random number generation capability is designed to comply with existing industry standards in this regard (ANSI X9.82 and NIST SP 800-90).

Some possible usages of the RDRAND instruction include cryptographic key generation as used in a variety of applications, including communication, digital signatures, secure storage, and so on.

3.7 Intel® 64 Architecture x2APIC

The x2APIC architecture extends the xAPIC architecture that provides key mechanisms for interrupt delivery. This extension is primarily intended to increase processor addressability.

Specifically, x2APIC:

- Retains all key elements of compatibility to the xAPIC architecture:
  - Delivery modes
  - Interrupt and processor priorities
  - Interrupt sources
  - Interrupt destination types

- Provides extensions to scale processor addressability for both the logical and physical destination modes
- Adds new features to enhance performance of interrupt delivery
- Reduces complexity of logical destination mode interrupt delivery on link based architectures

The key enhancements provided by the x2APIC architecture over xAPIC are the following:

- Support for two modes of operation to provide backward compatibility and extensibility for future platform innovations:
  - In xAPIC compatibility mode, APIC registers are accessed through memory mapped interface to a 4K-Byte page, identical to the xAPIC architecture.
  - In x2APIC mode, APIC registers are accessed through Model Specific Register (MSR) interfaces. In this mode, the x2APIC architecture provides significantly increased processor addressability and some enhancements on interrupt delivery.
- Increased range of processor addressability in x2APIC mode:
  - Physical xAPIC ID field increases from 8 bits to 32 bits, allowing for interrupt processor addressability up to 4G–1 processors in physical destination mode. A processor implementation of x2APIC architecture can support fewer than 32-bits in a software transparent fashion.
  - Logical xAPIC ID field increases from 8 bits to 32 bits. The 32-bit logical x2APIC ID is partitioned into two sub-fields – a 16-bit cluster ID and a 16-bit logical ID within the cluster. Consequently, ((2^20) – 16) processors can be addressed in logical destination mode. Processor implementations can support fewer than 16 bits in the cluster ID sub-field and logical ID sub-field in a software agnostic fashion.
- More efficient MSR interface to access APIC registers:
  - To enhance inter-processor and self-directed interrupt delivery as well as the ability to virtualize the local APIC, the APIC register set can be accessed only through MSR-based interfaces in x2APIC mode. The Memory Mapped IO (MMIO) interface used by xAPIC is not supported in x2APIC mode.
- The semantics for accessing APIC registers have been revised to simplify the programming of frequently-used APIC registers by system software. Specifically, the software semantics for using the Interrupt Command Register (ICR) and End Of Interrupt (EOI) registers have been modified to allow for more efficient delivery and dispatching of interrupts.
- The x2APIC extensions are made available to system software by enabling the local x2APIC unit in the "x2APIC" mode. To benefit from x2APIC capabilities, a new operating system and a new BIOS are both needed, with special support for x2APIC mode.
- The x2APIC architecture provides backward compatibility to the xAPIC architecture and forward extendible for future Intel platform innovations.

Note: Intel x2APIC Technology may not be available on all SKUs.

For more information, see the *Intel® 64 Architecture x2APIC Specification* at http://www.intel.com/products/processor/manuals/.

3.8 Power Aware Interrupt Routing (PAIR)

The processor includes enhanced power-performance technology that routes interrupts to threads or cores based on their sleep states. As an example, for energy savings, it routes the interrupt to the active cores without waking the deep idle cores. For performance, it routes the interrupt to the idle (C1) cores without interrupting the already heavily loaded cores. This enhancement is mostly beneficial for high-interrupt scenarios like Gigabit LAN, WLAN peripherals, and so on.

3.9 Execute Disable Bit

The Execute Disable Bit allows memory to be marked as executable when combined with a supporting operating system. If code attempts to run in non-executable memory, the processor raises an error to the operating system. This feature can prevent some classes of viruses or worms that exploit buffer overrun vulnerabilities and can thus help improve the overall security of the system. See the *Intel® 64 and IA-32 Architectures Software Developer's Manuals* for more detailed information.

3.10 Intel® Boot Guard

Intel® Boot Guard can help protect the platform boot integrity by preventing execution of unauthorized boot blocks. With Intel® Boot Guard, platform manufacturers can create boot policies such that invocation of an unauthorized (or untrusted) boot block will trigger the platform protection per the manufacturer's defined policy.

With verification based in the hardware, Intel® Boot Guard extends the trust boundary of the platform boot process down to the hardware level.

Intel® Boot Guard accomplishes this by:

- Providing hardware-based Static Root of Trust for Measurement (S-RTM) and the Root of Trust for Verification (RTV) using Intel architectural components.
- Providing architectural definition for platform manufacturer Boot Policy.
- Enforcing manufacture provided Boot Policy using Intel architectural components.

Benefits of this protection is that Intel® Boot Guard can help maintain platform integrity by preventing re-purposing of the manufacturer’s hardware to run an unauthorized software stack.

Note: Intel® Boot Guard technology availability may vary between the different SKUs.

3.11 Supervisor Mode Execution Protection (SMEP)

Supervisor Mode Execution Protection provides the next level of system protection by blocking malicious software attacks from user mode code when the system is running in the highest privilege level. This technology helps to protect from virus attacks and unwanted code from harming the system. For more information, refer to *Intel® 64 and IA-32 Architectures Software Developer's Manual, Volume 3A* at: http://www.intel.com/Assets/PDF/manual/253668.pdf

3.12 Intel® Transactional Synchronization Extensions - New Instructions (Intel® TSX-NI)

New on the processor are the Intel Transactional Synchronization Extensions - New Instructions (Intel TSX-NI). Intel TSX-NI provides a set of instruction extensions that allow programmers to specify regions of code for transactional synchronization. Programmers can use these extensions to achieve the performance of fine-grain locking while actually programming using coarse-grain locks. Details on Intel TSX-NI are in the *Intel® Architecture Instruction Set Extensions Programming Reference.*

4.0 Power Management

This chapter provides information on the following power management topics:

- Advanced Configuration and Power Interface (ACPI) States
- Processor Core
- Integrated Memory Controller (IMC)
- Processor Graphics Controller

Figure 8. Processor Power States

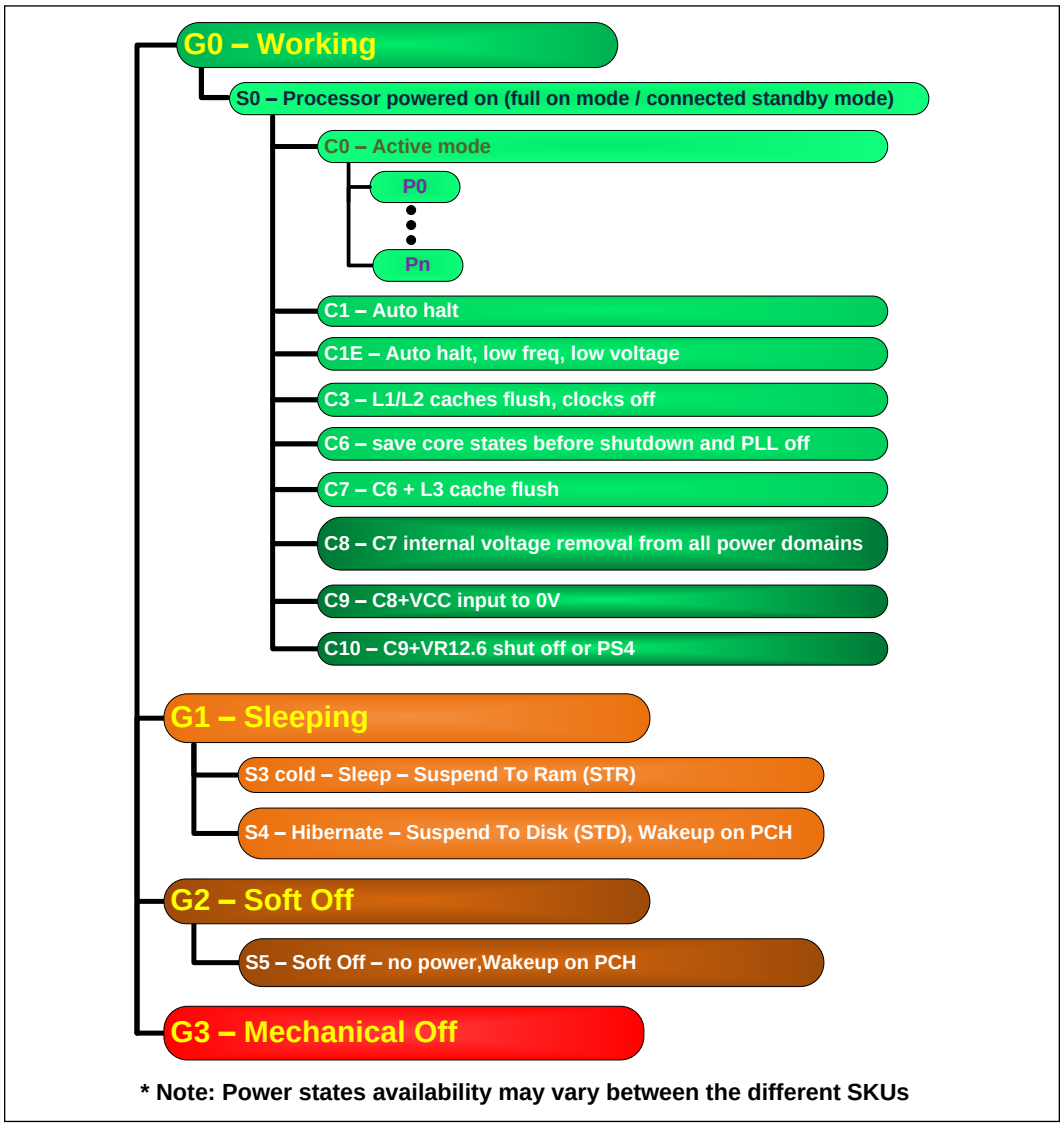

Figure 9. Processor Package and Core C-States

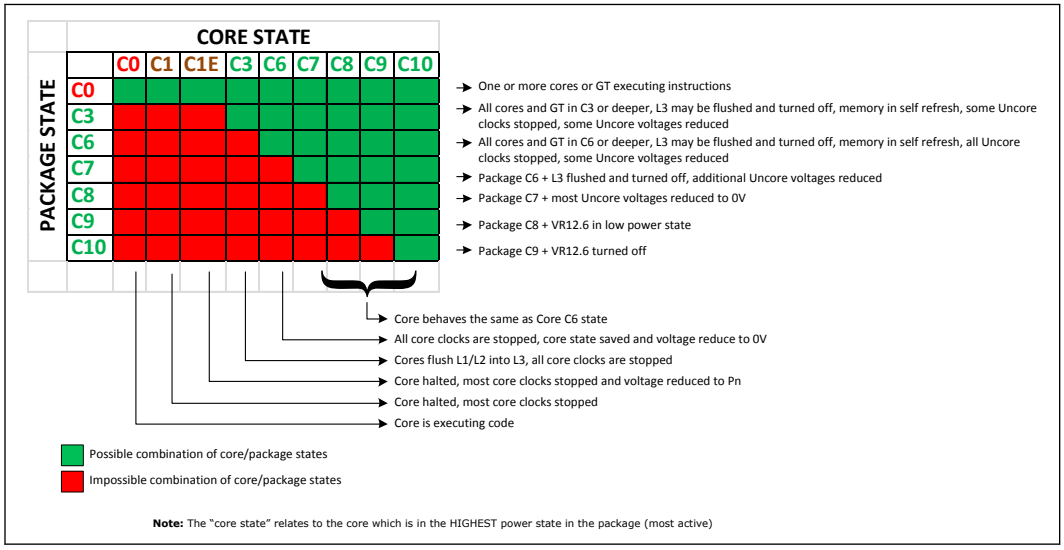

4.1 Advanced Configuration and Power Interface (ACPI) States Supported

This section describes the ACPI states supported by the processor.

Table 13. System States

State	Description
G0/S0	Full On Mode, Display On.
G0/S0	Connected Standby Mode, Display Off.
G1/S3-Cold	Suspend-to-RAM (STR). Context saved to memory (S3-Hot state is not supported by the processor).
G1/S4	Suspend-to-Disk (STD). All power lost (except wakeup on PCH).
G2/S5	Soft off. All power lost (except wakeup on PCH). Total reboot.
G3	Mechanical off. All power removed from system.

Table 14. Processor Core / Package State Support

State	Description
C0	Active mode, processor executing code.
C1	AutoHALT state.
C1E	AutoHALT state with lowest frequency and voltage operating point.
C3	Execution cores in C3 state flush their L1 instruction cache, L1 data cache, and L2 cache to the L3 shared cache. Clocks are shut off to each core.
C6	Execution cores in this state save their architectural state before removing core voltage.

continued...

State	Description
C7	Execution cores in this state behave similarly to the C6 state. If all execution cores request C7 state, L3 cache ways are flushed until it is cleared. If the entire L3 cache is flushed, voltage will be removed from the L3 cache. Power removal to SA, Cores and L3 will reduce power consumption.
C8	C7 state plus voltage is removed from all power domains after required state is saved. PLL is powered down.
C9	C8 state plus processor V_{CC} input voltage at 0 V.
C10	C9 state plus VR12.6 is set to low-power state, near shut off.

Table 15. Integrated Memory Controller States

State	Description
Power up	CKE asserted. Active mode.
Pre-charge Power-down	CKE de-asserted (not self-refresh) with all banks closed.
Active Power-down	CKE de-asserted (not self-refresh) with minimum one bank active.
Self-Refresh	CKE de-asserted using device self-refresh.

Table 16. G, S, and C Interface State Combinations

Global (G) State	Sleep (S) State	Processor Package (C) State	Processor State	System Clocks	Description
G0	S0	C0	Full On	On	Full On
G0	S0	C1/C1E	Auto-Halt	On	Auto-Halt
G0	S0	C3	Deep Sleep	On	Deep Sleep
G0	S0	C6/C7	Deep Power-down	On	Deep Power-down
G0	S0	C8/C9/C10		On	Deeper Power-down
G1	S3	Power off		Off, except RTC	Suspend to RAM
G1	S4	Power off		Off, except RTC	Suspend to Disk
G2	S5	Power off		Off, except RTC	Soft Off
G3	NA	Power off		Power off	Hard off

4.2 Processor Core Power Management

While executing code, Enhanced Intel SpeedStep® Technology optimizes the processor's frequency and core voltage based on workload. Each frequency and voltage operating point is defined by ACPI as a P-state. When the processor is not executing code, it is idle. A low-power idle state is defined by ACPI as a C-state. In general, deeper power C-states have longer entry and exit latencies.

4.2.1 Enhanced Intel® SpeedStep® Technology Key Features

The following are the key features of Enhanced Intel SpeedStep Technology:

- Multiple frequency and voltage points for optimal performance and power efficiency. These operating points are known as P-states.
- Frequency selection is software controlled by writing to processor MSRs. The voltage is optimized based on the selected frequency and the number of active processor cores.
  - Once the voltage is established, the PLL locks on to the target frequency.
  - All active processor cores share the same frequency and voltage. In a multi-core processor, the highest frequency P-state requested among all active cores is selected.
  - Software-requested transitions are accepted at any time. If a previous transition is in progress, the new transition is deferred until the previous transition is completed.
- The processor controls voltage ramp rates internally to ensure glitch-free transitions.
- Because there is low transition latency between P-states, a significant number of transitions per-second are possible.

4.2.2 Low-Power Idle States

When the processor is idle, low-power idle states (C-states) are used to save power. More power savings actions are taken for numerically higher C-states. However, higher C-states have longer exit and entry latencies. Resolution of C-states occur at the thread, processor core, and processor package level. Thread-level C-states are available if Intel Hyper-Threading Technology is enabled.

Caution: Long term reliability cannot be assured unless all the Low-Power Idle States are enabled.

Figure 10. Idle Power Management Breakdown of the Processor Cores

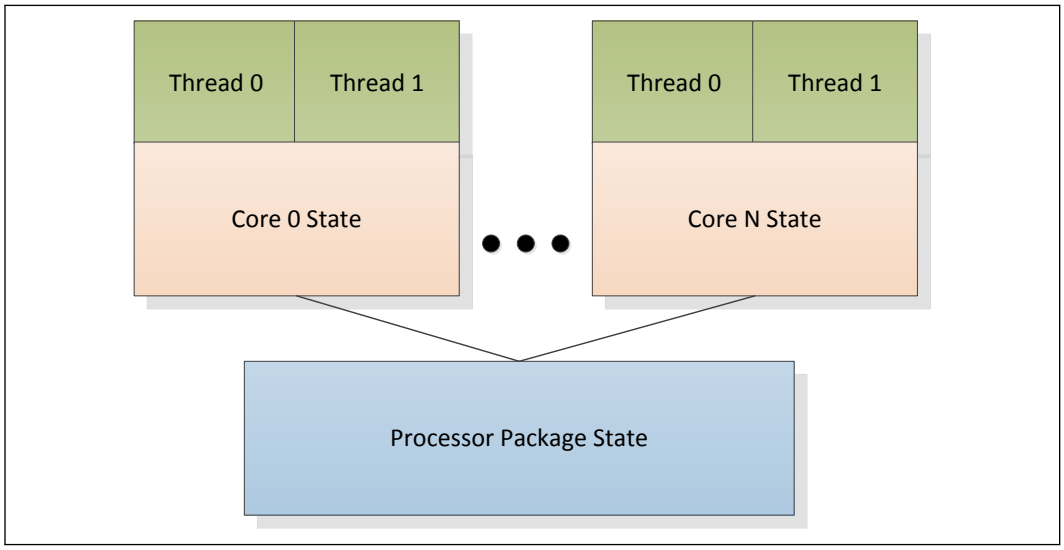

While individual threads can request low-power C-states, power saving actions only take place once the core C-state is resolved. Core C-states are automatically resolved by the processor. For thread and core C-states, a transition to and from C0 is required before entering any other C-state.

4.2.3 Requesting Low-Power Idle States

The primary software interfaces for requesting low-power idle states are through the MWAIT instruction with sub-state hints and the HLT instruction (for C1 and C1E). However, software may make C-state requests using the legacy method of I/O reads from the ACPI-defined processor clock control registers, referred to as P_LVLx. This method of requesting C-states provides legacy support for operating systems that initiate C-state transitions using I/O reads.

For legacy operating systems, P_LVLx I/O reads are converted within the processor to the equivalent MWAIT C-state request. Therefore, P_LVLx reads do not directly result in I/O reads to the system. The feature, known as I/O MWAIT redirection, must be enabled in the BIOS.

The BIOS can write to the C-state range field of the PMG_IO_CAPTURE MSR to restrict the range of I/O addresses that are trapped and emulate MWAIT like functionality. Any P_LVLx reads outside of this range do not cause an I/O redirection to MWAIT(Cx) like request. The reads fall through like a normal I/O instruction.

Note: When P_LVLx I/O instructions are used, MWAIT sub-states cannot be defined. The MWAIT sub-state is always zero if I/O MWAIT redirection is used. By default, P_LVLx I/O redirections enable the MWAIT 'break on EFLAGS.IF' feature that triggers a wakeup on an interrupt, even if interrupts are masked by EFLAGS.IF.

4.2.4 Core C-State Rules

The following are general rules for all core C-states, unless specified otherwise:

- A core C-state is determined by the lowest numerical thread state (such as Thread 0 requests C1E state while Thread 1 requests C3 state, resulting in a core C1E state). See the *G, S, and C Interface State Combinations* table.
- A core transitions to C0 state when:
  - An interrupt occurs
  - There is an access to the monitored address if the state was entered using an MWAIT/Timed MWAIT instruction
  - The deadline corresponding to the Timed MWAIT instruction expires
- An interrupt directed toward a single thread wakes only that thread.
- If any thread in a core is in active (in C0 state), the core's C-state will resolve to C0 state.
- Any interrupt coming into the processor package may wake any core.
- A system reset re-initializes all processor cores.

Core C0 State

The normal operating state of a core where code is being executed.

Core C1/C1E State

C1/C1E is a low power state entered when all threads within a core execute a HLT or MWAIT(C1/C1E) instruction.

A System Management Interrupt (SMI) handler returns execution to either Normal state or the C1/C1E state. See the *Intel® 64 and IA-32 Architectures Software Developer's Manual* for more information.

While a core is in C1/C1E state, it processes bus snoops and snoops from other threads. For more information on C1E state, see Package C-States on page 48.

Core C3 State

Individual threads of a core can enter the C3 state by initiating a P_LVL2 I/O read to the P_BLK or an MWAIT(C3) instruction. A core in C3 state flushes the contents of its L1 instruction cache, L1 data cache, and L2 cache to the shared L3 cache, while maintaining its architectural state. All core clocks are stopped at this point. Because the core's caches are flushed, the processor does not wake any core that is in the C3 state when either a snoop is detected or when another core accesses cacheable memory.

Core C6 State

Individual threads of a core can enter the C6 state by initiating a P_LVL3 I/O read or an MWAIT(C6) instruction. Before entering core C6 state, the core will save its architectural state to a dedicated SRAM. Once complete, a core will have its voltage reduced to zero volts. During exit, the core is powered on and its architectural state is restored.

Core C7-C10 States

Individual threads of a core can enter the C7, C8, C9, or C10 state by initiating a P_LVL4, P_LVL5, P_LVL6, P_LVL7 I/O read (respectively) to the P_BLK or by an MWAIT(C7/C8/C9/C10) instruction. The core C7–C10 state exhibits the same behavior as the core C6 state.

C-State Auto-Demotion

In general, deeper C-states, such as C6 or C7 state, have long latencies and have higher energy entry/exit costs. The resulting performance and energy penalties become significant when the entry/exit frequency of a deeper C-state is high. Therefore, incorrect or inefficient usage of deeper C-states have a negative impact on battery life and idle power. To increase residency and improve battery life and idle power in deeper C-states, the processor supports C-state auto-demotion.

There are two C-state auto-demotion options:

- C7/C6 to C3 state
- C7/C6/C3 To C1 state

The decision to demote a core from C6/C7 to C3 or C3/C6/C7 to C1 state is based on each core's immediate residency history and interrupt rate . If the interrupt rate experienced on a core is high and the residence in a deep C-state between such interrupts is low, the core can be demoted to a C3 or C1 state. A higher interrupt pattern is required to demote a core to C1 state as compared to C3 state.

This feature is disabled by default. BIOS must enable it in the PMG_CST_CONFIG_CONTROL register. The auto-demotion policy is also configured by this register.

4.2.5 Package C-States

The processor supports C0, C1/C1E, C3, C6, C7, C8, C9, and C10 power states.The following is a summary of the general rules for package C-state entry. These apply to all package C-states, unless specified otherwise:

- A package C-state request is determined by the lowest numerical core C-state amongst all cores.
- A package C-state is automatically resolved by the processor depending on the core idle power states and the status of the platform components.
  - Each core can be at a lower idle power state than the package if the platform does not grant the processor permission to enter a requested package C-state.
  - The platform may allow additional power savings to be realized in the processor.
  - For package C-states, the processor is not required to enter C0 state before entering any other C-state.
  - Entry into a package C-state may be subject to auto-demotion – that is, the processor may keep the package in a deeper package C-state than requested by the operating system if the processor determines, using heuristics, that the deeper C-state results in better power/performance.

The processor exits a package C-state when a break event is detected. Depending on the type of break event, the processor does the following:

- If a core break event is received, the target core is activated and the break event message is forwarded to the target core.
  - If the break event is not masked, the target core enters the core C0 state and the processor enters package C0 state.
  - If the break event is masked, the processor attempts to re-enter its previous package state.
- If the break event was due to a memory access or snoop request,
  - But the platform did not request to keep the processor in a higher package C-state, the package returns to its previous C-state.
  - And the platform requests a higher power C-state, the memory access or snoop request is serviced and the package remains in the higher power C-state.

The following table shows package C-state resolution for a dual-core processor. The following figure summarizes package C-state transitions.

Table 17. Coordination of Core Power States at the Package Level

Package C-State		Core 1							
		C0	C1	C3	C6	C7	C8	C9	C10
Core 0	C0	C0	C0	C0	C0	C0	C0	C0	C0
	C1	C0	C1[1]	C1[1]	C1[1]	C1[1]	C1[1]	C1[1]	C1[1]
	C3	C0	C1[1]	C3	C3	C3	C3	C3	C3
	C6	C0	C1[1]	C3	C6	C6	C6	C6	C6
	C7	C0	C1[1]	C3	C6	C7	C7	C7	C7
	C8	C0	C1[1]	C3	C6	C7	C8	C8	C8
	C9	C0	C1[1]	C3	C6	C7	C8	C9	C9
	C10	C0	C1[1]	C3	C6	C7	C8	C9	C10

Note: 1. If enabled, the package C-state will be C1E if all cores have resolved a core C1 state or higher.

Figure 11. Package C-State Entry and Exit

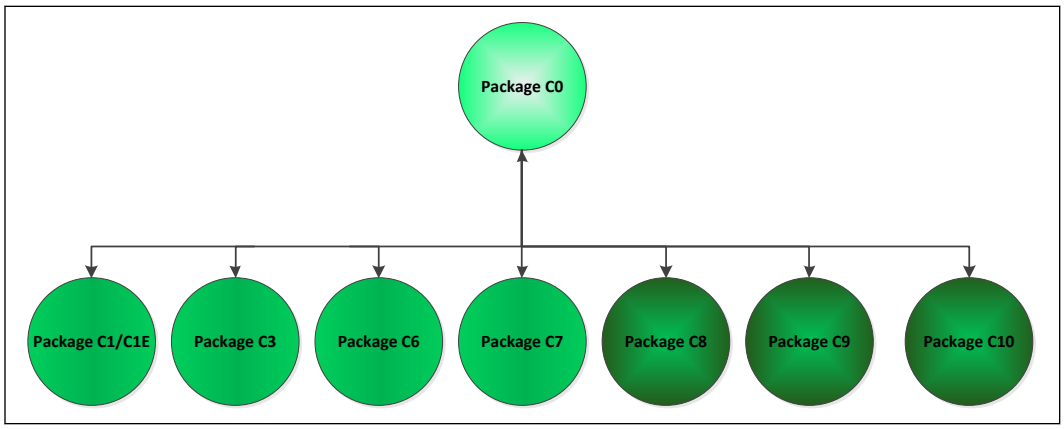

Package C0 State

This is the normal operating state for the processor. The processor remains in the normal state when at least one of its cores is in the C0 or C1 state or when the platform has not granted permission to the processor to go into a low-power state. Individual cores may be in lower power idle states while the package is in C0 state.

Package C1/C1E State

No additional power reduction actions are taken in the package C1 state. However, if the C1E sub-state is enabled, the processor automatically transitions to the lowest supported core clock frequency, followed by a reduction in voltage.

The package enters the C1 low-power state when:

- At least one core is in the C1 state.
- The other cores are in a C1 or deeper power state.

The package enters the C1E state when:

- All cores have directly requested C1E using MWAIT(C1) with a C1E sub-state hint.

- All cores are in a power state deeper than C1/C1E state; however, the package low-power state is limited to C1/C1E using the PMG_CST_CONFIG_CONTROL MSR.
- All cores have requested C1 state using HLT or MWAIT(C1) and C1E auto-promotion is enabled in IA32_MISC_ENABLES.

No notification to the system occurs upon entry to C1/C1E state.

Package C2 State

Package C2 state is an internal processor state that cannot be explicitly requested by software. A processor enters Package C2 state when:

- All cores and graphics have requested a C3 or deeper power state; however, constraints (LTR, programmed timer events in the near future, and so on) prevent entry to any state deeper than C 2 state. Or,
- All cores and graphics are in the C3 or deeper power states, and a memory access request is received. Upon completion of all outstanding memory requests, the processor transitions back into a deeper package C-state.

Package C3 State

A processor enters the package C3 low-power state when:

- At least one core is in the C3 state.
- The other cores are in a C3 state or deeper power state and the processor has been granted permission by the platform.
- The platform has not granted a request to a package C6/C7 or deeper state, however, has allowed a package C6 state.

In package C3 state, the L3 shared cache is valid.

Package C6 State

A processor enters the package C6 low-power state when:

- At least one core is in the C6 state.
- The other cores are in a C6 or deeper power state and the processor has been granted permission by the platform.
- The platform has not granted a package C7 state or deeper request; however, has allowed a package C6 state.
- If the cores are requesting C7 state, but the platform is limiting to a package C6 state, the last level cache in this case can be flushed.

In package C6 state all cores have saved their architectural state and have had their core voltages reduced to zero volts. It is possible the L3 shared cache is flushed and turned off in package C6 state. If at least one core is requesting C6 state, the L3 cache will not be flushed.

Package C7 State

The processor enters the package C7 low-power state when all cores are in the C7 state. In package C7, the processor will take action to remove power from portions of the system agent.

Core break events are handled the same way as in package C3 or C6 state.

Package C8 State

The processor enters C8 states when the core with the highest state is C8.

The package C8 state is similar to package C7 state; however, in addition, all internally generated voltage rails are turned off and the input V_{CC} is reduced to 1.15 V to 1.3 V.

Package C9 State

The processor enters package C9 states when the core with the highest state is C9.

The package C9 state is similar to package C8 state; in addition, the input V_{CC} is changed to 0 V.

Package C10 State

The processor enters C10 states when the core with the highest state is C10.

The package C10 state is similar to the package C9 state; in addition, the VR12.6 is in PS4 low-power state, which is near to shut off of the VR12.6.

Dynamic L3 Cache Sizing

When all cores request C7 or deeper C-state, internal heuristics is dynamically flushes the L3 cache. Once the cores enter a deep C-state, depending on their MWAIT substate request, the L3 cache is either gradually flushed N-ways at a time or flushed all at once. Upon the cores exiting to C0, the L3 cache is gradually expanded based on internal heuristics.

4.2.6 Package C-States and Display Resolutions

The integrated graphics engine has the frame buffer located in system memory. When the display is updated, the graphics engine fetches display data from system memory. Different screen resolutions and refresh rates have different memory latency requirements. These requirements may limit the deepest Package C-state the processor can enter. Other elements that may affect the deepest Package C-state available are the following:

- Display is on or off
- Single or multiple displays
- Native or non-native resolution
- Panel Self Refresh (PSR) technology

Note: Display resolution is not the only factor influencing the deepest Package C-state the processor can get into. Device latencies, interrupt response latencies, and core C-states are among other factors that influence the final package C-state the processor can enter.

The following table lists display resolutions and deepest available package C-State. The display resolutions are examples using common values for blanking and pixel rate. Actual results will vary. The table shows the deepest possible Package C-state. System workload, system idle, and AC or DC power also affect the deepest possible Package C-state.

Table 18. Deepest Package C-State Available – U-Processor Line and Y-Processor Line

Panel Self Refresh (PSR)	Number of Displays [1]	Native Resolution [2]	Deepest Available Package C-State
Disabled	Single	800x600 60 Hz	PC7
Disabled	Single	1024x768 60 Hz	PC7
Disabled	Single	1280x1024 60 Hz	PC7
Disabled	Single	1920x1080 60 Hz	PC7
Disabled	Single	1920x1200 60 Hz	PC7
Disabled	Single	1920x1440 60 Hz	PC6
Disabled	Single	2048x1536 60 Hz	PC6
Disabled	Single	2560x1600 60 Hz	PC6
Disabled	Single	2560x1920 60 Hz	PC2
Disabled	Single	2880x1620 60 Hz	PC2
Disabled	Single	2880x1800 60 Hz [3]	PC2
Disabled	Single	3200x1800 60 Hz [3]	PC2
Disabled	Single	3200x2000 60 Hz [3]	PC2
Disabled	Single	3840x2160 30 Hz	PC2
Disabled	Single	4096x2160 24 Hz	PC2
Disabled	Multiple	800x600 60 Hz	PC7
Disabled	Multiple	1024x768 60 Hz	PC6
Disabled	Multiple	1280x1024 60 Hz	PC6
Disabled	Multiple	1920x1080 60 Hz	PC2
Disabled	Multiple	1920x1200 60 Hz	PC2
Disabled	Multiple	1920x1440 60 Hz	PC2
Disabled	Multiple	2048x1536 60 Hz	PC2
Disabled	Multiple	2560x1600 60 Hz	PC2
Disabled	Multiple	2560x1920 60 Hz	PC2
Disabled	Multiple	2880x1620 60 Hz	PC2
Disabled	Multiple	2880x1800 60 Hz [3]	PC2
Disabled	Multiple	3200x1800 60 Hz [3]	PC2
Disabled	Multiple	3200x2000 60 Hz [3]	PC2
Disabled	Multiple	3840x2160 30 Hz	PC2
Disabled	Multiple	4096x2160 24 Hz	PC2

continued...

Panel Self Refresh (PSR)	Number of Displays [1]	Native Resolution [2]	Deepest Available Package C-State
Enabled	Single	Any native resolution [4]	PC7
Enabled	Multiple	Any native resolution [1]	Same as PSR disabled for the given resolution with multiple displays

Notes:
1. For multiple display cases, the resolution listed is the highest native resolution of all enabled displays, and PSR is internally disabled; that is, dual display with one 800x600 60 Hz display and one 2560x1600 60 Hz display will result in a deepest available package C-state of PC2.
2. For non-native resolutions, PSR is internally disabled, and the deepest available package C-State will be between that of the PSR disabled native resolution and the PSR disabled non-native resolution.; that is, a native 3200x1800 60 Hz panel using non-native 1920x1080 60 Hz resolution will result in a deepest available package C-State between PC2 and PC7.
3. Resolution not supported by Y-Processor line.
4. Microcode Update rev 00000010 or newer must be used.

4.3 Integrated Memory Controller (IMC) Power Management

The main memory is power managed during normal operation and in low-power ACPI Cx states.

4.3.1 Disabling Unused System Memory Outputs

Any system memory (SM) interface signal that goes to a memory in which it is not connected to any actual memory devices is tri-stated. The benefits of disabling unused SM signals are:

- Reduced power consumption.
- Reduced possible overshoot/undershoot signal quality issues seen by the processor I/O buffer receivers caused by reflections from potentially un-terminated transmission lines.

When a given rank is not populated, the corresponding chip select and CKE signals are not driven.

At reset, all rows must be assumed to be populated, until it can be determined that the rows are not populated. This is due to the fact that when CKE is tri-stated with DRAMs present, the DRAMs are not ensured to maintain data integrity. CKE tri-state should be enabled by BIOS where appropriate, since at reset all rows must be assumed to be populated.

CKE tristate should be enabled by BIOS where appropriate, since at reset all rows must be assumed to be populated.

4.3.2 DRAM Power Management and Initialization

The processor implements extensive support for power management on the memory interface.The processor drives four CKE pins, one per rank.

The CKE is one of the power-save means. When CKE is off, the internal DDR clock is disabled and the DDR power is reduced. The power-saving differs according to the selected mode and the DDR type used. For more information, refer to the IDD table in the DDR specification.

The processor supports four different types of power-down modes in package C0. The different power-down modes can be enabled through configuring "PM_PDWN_config_0_0_0_MCHBAR". The type of CKE power-down can be configured through PDWN_mode (bits 15:12) and the idle timer can be configured through PDWN_idle_counter (bits 11:0). The different power-down modes supported are:

- **No power-down** (CKE disable)
- **Active power-down (APD):** This mode is entered if there are open pages when de-asserting CKE. In this mode the open pages are retained. Power-saving in this mode is the lowest. Power consumption of DDR is defined by IDD3P. Exiting this mode is defined by tXP – small number of cycles. For this mode, DRAM DLL must be on.
- **PPD/DLL-off:** In this mode the data-in DLLs on DDR are off. Power-saving in this mode is the best among all power modes. Power consumption is defined by IDD2P1. Exiting this mode is defined by tXP, but also tXPDLL (10–20 according to DDR type) cycles until first data transfer is allowed. For this mode, DRAM DLL must be off.
- **Pre-charged power-down (PPD):** This mode is entered if all banks in DDR are pre-charged when de-asserting CKE. Power saving in this mode is intermediate – better than APD, but less than DLL-off. Power consumption is defined by IDD2P1. Exiting this mode is defined by tXP. The difference from APD mode is that when waking-up all page-buffers are empty.) The LPDDR does not have a DLL. As a result, the power savings are as good as PPD/DLL-off, but will have lower exit latency and higher performance.

The CKE is determined per rank, whenever it is inactive. Each rank has an idle-counter. The idle-counter starts counting as soon as the rank has no accesses, and if it expires, the rank may enter power-down while no new transactions to the rank arrives to queues. The idle-counter begins counting at the last incoming transaction arrival.

It is important to understand that since the power-down decision is per rank, the IMC can find many opportunities to power down ranks, even while running memory intensive applications; the savings are significant (may be few Watts, according to the DDR specification). This is significant when each channel is populated with more ranks.

Selection of power modes should be according to power-performance or thermal trade-offs of a given system:

- When trying to achieve maximum performance and power or thermal consideration is not an issue – use no power-down
- In a system which tries to minimize power-consumption, try using the deepest power-down mode possible – PPD/DLL-off with a low idle timer value
- In high-performance systems with dense packaging (that is, tricky thermal design) the power-down mode should be considered in order to reduce the heating and avoid DDR throttling caused by the heating.

The default value that BIOS configures in "PM_PDWN_config_0_0_0_MCHBAR" is 6080h – that is, PPD/DLL-off mode with idle timer of 80h, or 128 DCLKs. This is a balanced setting with deep power-down mode and moderate idle timer value.

The idle timer expiration count defines the # of DCKLs that a rank is idle that causes entry to the selected powermode. As this timer is set to a shorter time, the IMC will have more opportunities to put DDR in power-down. There is no BIOS hook to set this

register. Customers choosing to change the value of this register can do it by changing it in the BIOS. For experiments, this register can be modified in real time if BIOS does not lock the IMC registers.

4.3.2.1 Initialization Role of CKE

During power-up, CKE is the only input to the SDRAM that has its level recognized (other than the DDR3L/DDR3L-RS reset pin) once power is applied. It must be driven LOW by the DDR controller to make sure the SDRAM components float DQ and DQS during power-up. CKE signals remain LOW (while any reset is active) until the BIOS writes to a configuration register. Using this method, CKE is ensured to remain inactive for much longer than the specified 200 micro-seconds after power and clocks to SDRAM devices are stable.

4.3.2.2 Conditional Self-Refresh

During S0 idle state, system memory may be conditionally placed into self-refresh state when the processor is in package C3 or deeper power state. Refer to Intel® Rapid Memory Power Management (Intel® RMPM) for more details on conditional self-refresh with Intel HD Graphics enabled.

When entering the S3 – Suspend-to-RAM (STR) state or S0 conditional self-refresh, the processor core flushes pending cycles and then enters SDRAM ranks that are not used by Intel graphics memory into self-refresh. The CKE signals remain LOW so the SDRAM devices perform self-refresh.

The target behavior is to enter self-refresh for package C3 or deeper power states as long as there are no memory requests to service. The target usage is shown in the following table.

Table 19. Targeted Memory State Conditions

Mode	Memory State with Processor Graphics	Memory State with External Graphics
C0, C1, C1E	Dynamic memory rank power-down based on idle conditions.	Dynamic memory rank power-down based on idle conditions.
C3, C6, C7 or deeper	If the processor graphics engine is idle and there are no pending display requests, then enter self-refresh. Otherwise, use dynamic memory rank power-down based on idle conditions.	If there are no memory requests, then enter self-refresh. Otherwise, use dynamic memory rank power-down based on idle conditions.
S3	Self-Refresh Mode	Self-Refresh Mode
S4	Memory power-down (contents lost)	Memory power-down (contents lost)

4.3.2.3 Dynamic Power-Down

Dynamic power-down of memory is employed during normal operation. Based on idle conditions, a given memory rank may be powered down. The IMC implements aggressive CKE control to dynamically put the DRAM devices in a power-down state. The processor core controller can be configured to put the devices in active power-down (CKE de-assertion with open pages) or pre-charge power-down (CKE de-assertion with all pages closed). Pre-charge power-down provides greater power savings, but has a bigger performance impact since all pages will first be closed before putting the devices in power-down mode.

If dynamic power-down is enabled, all ranks are powered up before doing a refresh cycle and all ranks are powered down at the end of refresh.

4.3.2.4 DRAM I/O Power Management

Unused signals should be disabled to save power and reduce electromagnetic interference. This includes all signals associated with an unused memory channel. Clocks, CKE, ODE, and CS signals are controlled per DIMM rank and will be powered down for unused ranks.

The I/O buffer for an unused signal should be tri-stated (output driver disabled), the input receiver (differential sense-amp) should be disabled, and any DLL circuitry related ONLY to unused signals should be disabled. The input path must be gated to prevent spurious results due to noise on the unused signals (typically handled automatically when input receiver is disabled).

4.3.3 DDR Electrical Power Gating (EPG)

The DDR I/O of the processor supports Electrical Power Gating (DDR-EPG) while the processor is at C3 or deeper power state.

In C3 or deeper power state, the processor internally gates V_{DDQ} for the majority of the logic to reduce idle power while keeping all critical DDR pins such as CKE and VREF in the appropriate state.

In C7 or deeper power state, the processor internally gates Vcc_{ST} for all non-critical state to reduce idle power.

In S3 or C-state transitions, the DDR does not go through training mode and will restore the previous training information.

4.4 Graphics Power Management

4.4.1 Intel® Rapid Memory Power Management (Intel® RMPM)

Intel Rapid Memory Power Management (Intel RMPM) conditionally places memory into self-refresh when the processor is in package C3 or deeper power state to allow the system to remain in the lower power states longer for memory not reserved for graphics memory. Intel RMPM functionality depends on graphics/display state (relevant only when processor graphics is being used), as well as memory traffic patterns generated by other connected I/O devices.

4.4.2 Graphics Render C-State

Render C-state (RC6) is a technique designed to optimize the average power to the graphics render engine during times of idleness. RC6 is entered when the graphics render engine, blitter engine, and the video engine have no workload being currently worked on and no outstanding graphics memory transactions. When the idleness condition is met, the processor graphics will program the graphics render engine internal power rail into a low voltage state.

4.4.3 Intel® Smart 2D Display Technology (Intel® S2DDT)

Intel S2DDT reduces display refresh memory traffic by reducing memory reads required for display refresh. Power consumption is reduced by less accesses to the IMC. Intel S2DDT is only enabled in single pipe mode.

Intel S2DDT is most effective with:

- Display images well suited to compression, such as text windows, slide shows, and so on. Poor examples are 3D games.
- Static screens such as screens with significant portions of the background showing 2D applications, processor benchmarks, and so on, or conditions when the processor is idle. Poor examples are full-screen 3D games and benchmarks that flip the display image at or near display refresh rates.

4.4.4 Intel® Graphics Dynamic Frequency

Intel Graphics Dynamic Frequency Technology is the ability of the processor and graphics cores to opportunistically increase frequency and/or voltage above the guaranteed processor and graphics frequency for the given part. Intel Graphics Dynamic Frequency Technology is a performance feature that makes use of unused package power and thermals to increase application performance. The increase in frequency is determined by how much power and thermal budget is available in the package, and the application demand for additional processor or graphics performance. The processor core control is maintained by an embedded controller. The graphics driver dynamically adjusts between P-States to maintain optimal performance, power, and thermals. The graphics driver will always try to place the graphics engine in the most energy efficient P-state.

4.4.5 Intel® Display Power Saving Technology (Intel® DPST)

The Intel DPST technique achieves backlight power savings while maintaining a good visual experience. This is accomplished by adaptively enhancing the displayed image while decreasing the backlight brightness simultaneously. The goal of this technique is to provide equivalent end-user-perceived image quality at a decreased backlight power level.

1. The original (input) image produced by the operating system or application is analyzed by the Intel DPST subsystem. An interrupt to Intel DPST software is generated whenever a meaningful change in the image attributes is detected. (A meaningful change is when the Intel DPST software algorithm determines that enough brightness, contrast, or color change has occurred to the displaying images that the image enhancement and backlight control needs to be altered.)
2. Intel DPST subsystem applies an image-specific enhancement to increase image contrast, brightness, and other attributes.
3. A corresponding decrease to the backlight brightness is applied simultaneously to produce an image with similar user-perceived quality (such as brightness) as the original image.

Intel DPST 6.0 has improved the software algorithms and has minor hardware changes to better handle backlight phase-in and ensures the documented and validated method to interrupt hardware phase-in.

4.4.6 Intel® Automatic Display Brightness

The Intel Automatic Display Brightness feature dynamically adjusts the backlight brightness based upon the current ambient light environment. This feature requires an additional sensor to be on the panel front. The sensor receives the changing ambient light conditions and sends the interrupts to the Intel Graphics driver. As per the change in Lux, (current ambient light illuminance), the new backlight setting can be adjusted through BLC. The converse applies for a brightly lit environment. Intel Automatic Display Brightness increases the backlight setting.

4.4.7 Intel® Seamless Display Refresh Rate Technology (Intel® SDRRS Technology)

When a Local Flat Panel (LFP) supports multiple refresh rates, the Intel Display Refresh Rate Switching power conservation feature can be enabled. The higher refresh rate will be used when plugged in with an AC power adaptor or when the end user has not selected/enabled this feature. The graphics software will automatically switch to a lower refresh rate for maximum battery life when the notebook is on battery power and when the user has selected/enabled this feature. There are two distinct implementations of Intel DRRS – static and seamless. The static Intel DRRS method uses a mode change to assign the new refresh rate. The seamless Intel DRRS method is able to accomplish the refresh rate assignment without a mode change and therefore does not experience some of the visual artifacts associated with the mode change (SetMode) method.

5.0 Thermal Management

The thermal solution provides both component-level and system-level thermal management. To allow for the optimal operation and long-term reliability of Intel processor-based systems, the system/processor thermal solution should be designed so that the processor:

- Remains below the maximum junction temperature (Tj_{Max}) specification at the maximum thermal design power (TDP).
- Conforms to system constraints, such as system acoustics, system skin-temperatures, and exhaust-temperature requirements.

Caution: Thermal specifications given in this chapter are on the component and package level and apply specifically to the processor. Operating the processor outside the specified limits may result in permanent damage to the processor and potentially other components in the system.

5.1 Thermal Considerations

The processor TDP is the maximum sustained power that should be used for design of the processor thermal solution. TDP represents an expected maximum sustained power from realistic applications. TDP may be exceeded for short periods of time or if running a "power virus" workload.

The processor integrates multiple processing and graphics cores and PCH on a single package.This may result in differences in the power distribution across the die and must be considered when designing the thermal solution.

Intel® Turbo Boost Technology 2.0 allows processor cores and processor graphics cores to run faster than the guaranteed frequency. It is invoked opportunistically and automatically as long as the processor is conforming to its temperature, power delivery, and current specification limits. When Intel Turbo Boost Technology 2.0 is enabled:

- Applications are expected to run closer to TDP more often as the processor will attempt to maximize performance by taking advantage of available TDP headroom in the processor package.
- The processor may exceed the TDP for short durations to use any available thermal capacitance within the thermal solution. The duration and time of such operation can be limited by platform runtime configurable registers within the processor.
- Thermal solutions and platform cooling that are designed to less than thermal design guidance may experience thermal and performance issues since more applications will tend to run at or near TDP for significant periods of time.

Note: Intel Turbo Boost Technology 2.0 availability may vary between the different SKUs.

5.2 Intel® Turbo Boost Technology 2.0 Power Monitoring

When operating in turbo mode, the processor monitors its own power and adjusts the turbo frequencies to maintain the average power within limits over a thermally significant time period. The processor calculates the package power that consists of the processor core power and graphics core power. In the event that a workload causes the power to exceed program power limits, the processor will protect itself using the Adaptive Thermal Monitor.

5.3 Intel® Turbo Boost Technology 2.0 Power Control

Illustration of Intel Turbo Boost Technology 2.0 power control is shown in the following sections and figures. Multiple controls operate simultaneously allowing for customization for multiple system thermal and power limitations. These controls allow for turbo optimizations within system constraints and are accessible using MSR, MMIO, or PECI interfaces

5.3.1 Package Power Control

The package power control allows for customization to implement optimal turbo within platform power delivery and package thermal solution limitations.

Table 20. Intel® Turbo Boost Technology 2.0 Package Power Control Settings

MSR: **Address:**	**MSR_TURBO_POWER_LIMIT** **610h**		
Control	**Bit**	**Default**	**Description**
POWER_LIMIT_1 (PL1)	14:0	SKU TDP	• This value sets the average power limit over a long time period. This is normally aligned to the TDP of the part and steady-state cooling capability of the thermal solution. The default value is the TDP for the SKU. • PL1 limit may be set lower than TDP in real time for specific needs, such as responding to a thermal event. If it is set lower than TDP, the processor may require to use frequencies below the guaranteed P1 frequency to control the low-power limits. The PL1 Clamp bit [16] should be set to enable the processor to use frequencies below P1 to control the set-power limit. • PL1 limit may be set higher than TDP. If set higher than TDP, the processor could stay at that power level continuously and cooling solution improvements may be required.
POWER_LIMIT_1_TIME (Turbo Time Parameter)	23:17	1 sec	This value is a time parameter that adjusts the algorithm behavior to maintain time averaged power at or below PL1. The hardware default value is 1 second; however, 28 seconds is recommended for most mobile applications.
POWER_LIMIT_2 (PL2)	46:32	1.25 x TDP	PL2 establishes the upper power limit of turbo operation above TDP, primarily for platform power supply considerations. Power may exceed this limit for up to 10 ms. The default for this limit is 1.25 x TDP; however, the BIOS may reprogram the default value to maximize the performance within platform power supply considerations. Setting this limit to TDP will limit the processor to only operate up to the TDP. It does not disable turbo because turbo is opportunistic and power/temperature dependent. Many workloads will allow some turbo frequencies for powers at or below TDP.

Figure 12. Package Power Control

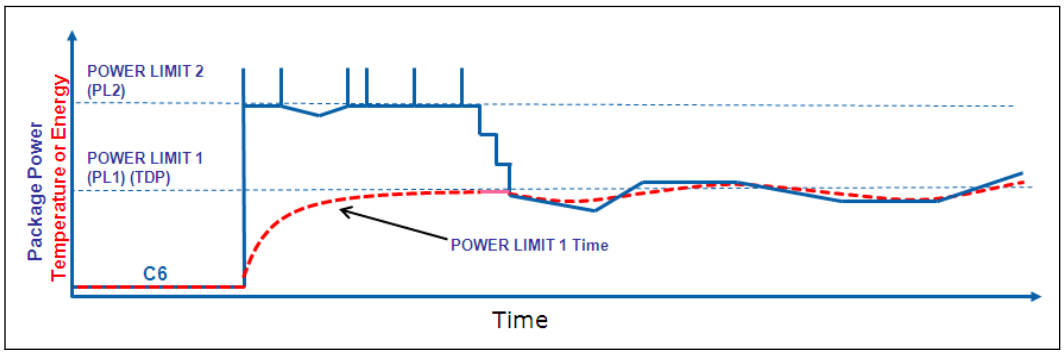

5.3.2 Turbo Time Parameter

Turbo Time Parameter is a mathematical parameter (units in seconds) that controls the Intel Turbo Boost Technology 2.0 algorithm using moving average of energy usage. During a maximum power turbo event of about 1.25 x TDP, the processor could sustain PL2 for up to approximately 1.5 times the Turbo Time Parameter. If the power value and/or Turbo Time Parameter is changed during runtime, it may take approximately 3 to 5 times the Turbo Time Parameter for the algorithm to settle at the new control limits. The time varies depending on the magnitude of the change and other factors. There is an individual Turbo Time Parameter associated with Package Power Control.

5.4 Configurable TDP (cTDP) and Low-Power Mode

Configurable TDP (cTDP) and Low-Power Mode (LPM) form a design vector where the processor's behavior and package TDP are dynamically adjusted to a desired system performance and power envelope. Configurable TDP and Low-Power Mode technologies offer opportunities to differentiate system design while running active workloads on select processor SKUs through scalability, configuration and adaptability. The scenarios or methods by which each technology is used are customizable but typically involve changes to PL1 and associated frequencies for the scenario with a resultant change in performance depending on system's usage. Either technology can be triggered by (but are not limited to) changes in OS power policies or hardware events such as docking a system, flipping a switch or pressing a button. cTDP and LPM are designed to be configured dynamically and do not require an operating system reboot.

Note: Configurable TDP and Low-Power Mode technologies are not battery life improvement technologies.

5.4.1 Configurable TDP

Note: Configurable TDP availability may vary between the different SKUs.

With cTDP, the processor is now capable of altering the maximum sustained power with an alternate IA core base frequency. Configurable TDP allows operation in situations where extra cooling is available or situations where a cooler and quieter mode of operation is desired. Configurable TDP can be enabled using Intel's DPTF driver or through HW/EC firmware. Enabling cTDP using the DPTF driver is recommended as Intel does not provide specific application or EC source code.

cTDP consists of three modes as shown in the following table.

Table 21. Configurable TDP Modes

Mode	Description
Nominal	This is the processor's rated frequency and TDP.
TDP-Up	When extra cooling is available, this mode specifies a higher TDP and higher guaranteed frequency versus the nominal mode.
TDP-Down	When a cooler or quieter mode of operation is desired, this mode specifies a lower TDP and lower guaranteed frequency versus the nominal mode.

In each mode, the Intel Turbo Boost Technology 2.0 power and frequency ranges are reprogrammed and the OS is given a new effective HFM operating point. The Intel DPTF driver assists in all these operations. The cTDP mode does not change the max per-core turbo frequency.

5.4.2 Low-Power Mode

Low-Power Mode (LPM) can provide cooler and quieter system operation. By combining several active power limiting techniques, the processor can consume less power while running at equivalent low frequencies. Active power is defined as processor power consumed while a workload is running and does not refer to the power consumed during idle modes of operation. LPM is only available using the Intel DPTF driver.

Through the DPTF driver, LPM can be configured to use each of the following methods to reduce active power:

- Restricting Intel Turbo Boost Power limits and IA core Turbo Boost availability
- Off-Lining core activity (Move processor traffic to a subset of cores)
- Placing an IA Core at LFM or LSF (Lowest Supported Frequency)
- Utilizing IA clock modulation
- Reducing number of active EUs to GT2 equivalent (Applicable for GT3 SKUs Only)
- LPM power as listed in the *TDP Specifications* table is defined at a point which IA cores working at MFM, GT = RPn and 1 core active

Off-lining core activity is the ability to dynamically scale a workload to a limited subset of cores in conjunction with a lower turbo power limit. It is one of the main vectors available to reduce active power. However, not all processor activity is ensured to be able to shift to a subset of cores. Shifting a workload to a limited subset of cores allows other cores to remain idle and save power. Therefore, when LPM is enabled, less power is consumed at equivalent frequencies.

Minimum Frequency Mode (MFM) of operation, which is the lowest supported frequency (LSF) at the LFM voltage, has been made available for use under LPM for further reduction in active power beyond LFM capability to enable cooler and quieter modes of operation.

5.5 Thermal and Power Specifications

The following notes apply to Table 22 on page 63 and Table 23 on page 64.

Note	Definition
1	The TDPs given are not the maximum power the processor can generate. Analysis indicates that real applications are unlikely to cause the processor to consume the theoretical maximum power dissipation for sustained periods of time.
2	TDP workload may consist of a combination of processor-core intensive and graphics-core intensive applications.
3	The thermal solution needs to ensure that the processor temperature does not exceed the maximum junction temperature (Tj_{MAX}) limit, as measured by the DTS and the critical temperature bit.
4	The processor junction temperature is monitored by Digital Temperature Sensors (DTS). For DTS accuracy, refer to Digital Thermal Sensor Accuracy (Taccuracy) on page 68.
5	Digital Thermal Sensor (DTS) based fan speed control is required to achieve optimal thermal performance. Intel recommends full cooling capability well before the DTS reading reaches Tj_{MAX}. An example of this is Tj_{MAX} – 10 ºC.
6	The idle power specifications are not 100% tested. These power specifications are determined by the characterization at higher temperatures and extrapolating the values for the junction temperature indicated.
7	At Tj of Tj_{MAX}
8	At Tj of 50 ºC
9	At Tj of 35 ºC
10	Can be modified at runtime by MSR writes, with MMIO and with PECI commands.
11	'Turbo Time Parameter' is a mathematical parameter (unit in seconds) that controls the processor turbo algorithm using a moving average of energy usage. Do not set the Turbo Time Parameter to a value less than 0.1 seconds. Refer to Turbo Time Parameter on page 61 for further information.
12	Shown limit is a time averaged power, based upon the Turbo Time Parameter. Absolute product power may exceed the set limits for short durations or under virus or uncharacterized workloads.
13	Processor will be controlled to specified power limit as described in Intel Turbo Boost Technology 2.0 Power Monitoring on page 60. If the power value and/or 'Turbo Time Parameter' is changed during runtime, it may take a short period of time (approximately 3 to 5 times the 'Turbo Time Parameter') for the algorithm to settle at the new control limits.
14	This is a hardware default setting and not a behavioral characteristic of the part.
15	For controllable turbo workloads, limit may be exceeded for up to 10 ms.
16	Refer to Table 21 on page 62 for the definitions of 'TDP-Nominal', 'TDP-Up', 'TDP-Down'.
17	LPM power level is an opportunistic power and is not a guaranteed value as usages and implementations may vary.
18	Power limits may vary depending on if the product supports the 'TDP-up' and/or 'TDP-down' modes. Default power limits can be found in the PKG_PWR_SKU MSR (614h).
19	May vary based on SKU.
20	cTDP down power is based on GT2 equivalent graphics configuration. cTDP down does not decrease the number of active Processor Graphics EUs, but relies on Power Budget Management (PL1) to achieve the specified power level.
21	Hardware default values might be overridden by the BIOS.

Table 22. Thermal Design Power (TDP) Specifications

Segment	State	Processor Core Frequency	Processor Graphics Core Frequency	Thermal Design Power	Units	Notes
U-Processor (Dual Core) 28W GT3	TDP-Nominal / HFM	2.0 GHz up to 2.8 GHz	200 MHz up to 1200 MHz	28	W	1, 2, 7, 16, 17, 18
	TDP-Down / LFM	800 MHz		23		
	LPM	800 MHz	200 MHz	22.5		

continued...

Segment	State	Processor Core Frequency	Processor Graphics Core Frequency	Thermal Design Power	Units	Notes
U-Processor (Dual Core) 15W GT3	TDP Nominal / HFM	1.3 GHz up to 1.7 GHz	200 MHz up to 1100 MHz	15	W	1, 2, 7, 16, 17, 18
	TDP-Down / LFM	800 MHz		11.5		
	LPM	800 MHz	200 MHz	11		
U-Processor (Dual Core) 15W GT2	TDP-Up	1.6 GHz up to 2.3 GHz	200 MHz up to 1100 MHz	25	W	1, 2, 7, 16, 17, 18
	TDP Nominal / HFM			15		
	TDP-Down / LFM	800 MHz		11.5		
	LPM	800 MHz	200 MHz	11		
Y-Processor (Dual Core) 11.5W (6W SDP / 4.5W SDP)	TDP Nominal / HFM	1.3 GHz up to 1.4 GHz	200 MHz up to 850 MHz	11.5	W	19
	TDP-Down / LFM	800 MHz		9.5 (6W SDP / 4.5W SDP)		
	LPM	600 MHz	200 MHz	9		

Table 23. Junction Temperature Specification

Segment	Symbol	Package Turbo Parameter	Min	Default	Max	Units	Notes
U-Processor (Dual Core)	T_j	Junction temperature limit	0	—	100	ºC	3, 4, 5
Y-Processor (Dual Core)	T_j	Junction temperature limit	0	—	100	ºC	3, 4, 5

Table 24. Maximum Idle Power Specification

Symbol	Parameter	U-Processor 15W with GT3		U-Processor 28W with GT3		Y-Processor 6W SDP / 4.5W SDP with GT2		Unit	Note
		Min	Max	Min	Max	Min	Max		
$P_{PACKAGE(C7)}$	Package power in Package C7 state	—	0.95	—	1.5	—	0.85	W	1, 3
$P_{PACKAGE(C8)}$	Package power in Package C8 state	—	0.12	—	0.18	—	0.1	W	1
$P_{PACKAGE(C9)}$	Package power in Package C9 state	—	0.052	—	0.1	—	0.04	W	1
$P_{PACKAGE(C10)}$	Package power in Package C10 state	—	0.052	—	0.1	—	0.04	W	1, 4
$P_{PACKAGE(Sx/M3)}$ INT_SUS	Package power in System S3/S4/S5 and M3 state (internal Suspend)	—	60	—	60	—	60	mW	1, 2
$P_{PACKAGE(Sx/Moff)}$ INT_SUS	Package power in System S3/S4/S5 and Moff state (internal Suspend)	—	50	—	50	—	50	mW	1, 2

continued...

Symbol	Parameter	U-Processor 15W with GT3		U-Processor 28W with GT3		Y-Processor 6W SDP / 4.5W SDP with GT2		Unit	Note
		Min	Max	Min	Max	Min	Max		
$P_{PACKAGE(Sx/M3)}$ EXT_SUS	Package power in System S3/S4/S5 and M3 state (external Suspend)	—	51	—	51	—	51	mW	1, 2
$P_{PACKAGE(Sx/Moff)}$ EXT_SUS	Package power in System S3/S4/S5 and Moff state (external Suspend)	—	33	—	33	—	33	mW	1, 2
$P_{PACKAGE(Deep\ Sx)}$	Package power in System Deep Sx state	—	19	—	19	—	19	mW	1, 2

Notes: 1. Package power includes both MCP components: processor and PCH.
2. Measured at Tj = 35 °C.
3. The C7 power is measured with LLC ON.
4. The C10 power is measured with LAN disabled.

5.6 Thermal Management Features

Occasionally the processor may operate in conditions that are near to its maximum operating temperature. This can be due to internal overheating or overheating within the platform. To protect the processor and the platform from thermal failure, several thermal management features exist to reduce package power consumption and thereby temperature in order to remain within normal operating limits. Furthermore, the processor supports several methods to reduce memory power.

5.6.1 Adaptive Thermal Monitor

The purpose of the Adaptive Thermal Monitor is to reduce processor core power consumption and temperature until it operates at or below its maximum operating temperature. Processor core power reduction is achieved by:

- Adjusting the operating frequency (using the core ratio multiplier) and voltage.
- Modulating (starting and stopping) the internal processor core clocks (duty cycle).

The Adaptive Thermal Monitor can be activated when the package temperature, monitored by any digital thermal sensor (DTS) meets or exceeds its maximum operating temperature. The maximum operating temperature implies either maximum junction temperature Tj_{MAX}, or Tj_{MAX} minus TCC Activation offset.

Exceeding the maximum operating temperature activates the thermal control circuit (TCC), if enabled. When activated the thermal control circuit (TCC) causes both the processor core and graphics core to reduce frequency and voltage adaptively. The Adaptive Thermal Monitor will remain active as long as the package temperature exceeds its specified limit. Therefore, the Adaptive Thermal Monitor will continue to reduce the package frequency and voltage until the TCC is de-activated.

Tj_{MAX} is factory calibrated and is not user configurable. The default value is software visible in the TEMPERATURE_TARGET (0x1A2) MSR, bits [23:16]. The TEMPERATURE_TARGET value stays the same when TCC Activation offset is enabled.

The Adaptive Thermal Monitor does not require any additional hardware, software drivers, or interrupt handling routines. It is not intended as a mechanism to maintain processor TDP. The system design should provide a thermal solution that can maintain TDP within its intended usage range.

Note: Adaptive Thermal Monitor protection is always enabled.

5.6.1.1 Thermal Control Circuit (TCC) Activation Offset

TCC Activation Offset can be used to activate the Adaptive Thermal Monitor at temperatures lower than Tj_{MAX}. It is the preferred thermal protection mechanism for Intel Turbo Boost Technology 2.0 operation since ACPI passive throttling states will pull the processor out of turbo mode operation when triggered. An offset (in degrees Celsius) can be written to the TEMPERATURE_TARGET (0x1A2) MSR, bits [29:24]. This value will be subtracted from the value found in bits [23:16]. The default offset is 0 °C, TCC activation will occur at Tj_{MAX}. The offset should be set lower than any other protection such as ACPI _PSV trip points.

5.6.1.2 Frequency / Voltage Control

Upon Adaptive Thermal Monitor activation, the processor core attempts to dynamically reduce processor core power by lowering the frequency and voltage operating point. The operating points are automatically calculated by the processor core itself and do not require the BIOS to program them as with previous generations of Intel processors. The processor core will scale the operating points such that:

- The voltage will be optimized according to the temperature, the core bus ratio, and number of cores in deep C-states.
- The core power and temperature are reduced while minimizing performance degradation.

Once the temperature has dropped below the maximum operating temperature, the operating frequency and voltage will transition back to the normal system operating point.

Once a target frequency/bus ratio is resolved, the processor core will transition to the new target automatically.

- On an upward operating point transition, the voltage transition precedes the frequency transition.
- On a downward transition, the frequency transition precedes the voltage transition.
- The processor continues to execute instructions. However, the processor will halt instruction execution for frequency transitions.

If a processor load-based Enhanced Intel SpeedStep Technology/P-state transition (through MSR write) is initiated while the Adaptive Thermal Monitor is active, there are two possible outcomes:

- If the P-state target frequency is higher than the processor core optimized target frequency, the P-state transition will be deferred until the thermal event has been completed.
- If the P-state target frequency is lower than the processor core optimized target frequency, the processor will transition to the P-state operating point.

5.6.1.3 Clock Modulation

If the frequency/voltage changes are unable to end an Adaptive Thermal Monitor event, the Adaptive Thermal Monitor will utilize clock modulation. Clock modulation is done by alternately turning the clocks off and on at a duty cycle (ratio between clock "on" time and total time) specific to the processor. The duty cycle is factory configured to 25% on and 75% off and cannot be modified. The period of the duty cycle is configured to 32 microseconds when the Adaptive Thermal Monitor is active. Cycle times are independent of processor frequency. A small amount of hysteresis has been included to prevent excessive clock modulation when the processor temperature is near its maximum operating temperature. Once the temperature has dropped below the maximum operating temperature, and the hysteresis timer has expired, the Adaptive Thermal Monitor goes inactive and clock modulation ceases. Clock modulation is automatically engaged as part of the Adaptive Thermal Monitor activation when the frequency/voltage targets are at their minimum settings. Processor performance will be decreased by the same amount as the duty cycle when clock modulation is active. Snooping and interrupt processing are performed in the normal manner while the Adaptive Thermal Monitor is active.

5.6.2 Digital Thermal Sensor

Each processor execution core has an on-die Digital Thermal Sensor (DTS) that detects the core's instantaneous temperature. The DTS is the preferred method of monitoring processor die temperature because:

- It is located near the hottest portions of the die.
- It can accurately track the die temperature and ensure that the Adaptive Thermal Monitor is not excessively activated.

Temperature values from the DTS can be retrieved through:

- A software interface using processor Model Specific Register (MSR).
- A processor hardware interface as described in Platform Environmental Control Interface (PECI) on page 29.

When temperature is retrieved by the processor MSR, it is the instantaneous temperature of the given core. When temperature is retrieved using PECI, it is the average of the highest DTS temperature in the package over a 256 ms time window. Intel recommends using the PECI reported temperature for platform thermal control that benefits from averaging, such as fan speed control. The average DTS temperature may not be a good indicator of package Adaptive Thermal Monitor activation or rapid increases in temperature that triggers the Out of Specification status bit within the PACKAGE_THERM_STATUS MSR 1B1h and IA32_THERM_STATUS MSR 19Ch.

Code execution is halted in C1 or deeper C-states. Package temperature can still be monitored through PECI in lower C-states.

Unlike traditional thermal devices, the DTS outputs a temperature relative to the maximum supported operating temperature of the processor (Tj_{MAX}), regardless of TCC activation offset. It is the responsibility of software to convert the relative temperature to an absolute temperature. The absolute reference temperature is readable in the TEMPERATURE_TARGET MSR 1A2h. The temperature returned by the DTS is an implied negative integer indicating the relative offset from Tj_{MAX}. The DTS does not report temperatures greater than Tj_{MAX}. The DTS-relative temperature readout directly impacts the Adaptive Thermal Monitor trigger point. When a package

DTS indicates that it has reached the TCC activation (a reading of 0h, except when the TCC activation offset is changed), the TCC will activate and indicate an Adaptive Thermal Monitor event. A TCC activation will lower both IA core and graphics core frequency, voltage, or both. Changes to the temperature can be detected using two programmable thresholds located in the processor thermal MSRs. These thresholds have the capability of generating interrupts using the core's local APIC. Refer to the *Intel® 64 and IA-32 Architectures Software Developer's Manual* for specific register and programming details.

5.6.2.1 Digital Thermal Sensor Accuracy (Taccuracy)

The error associated with DTS measurements will not exceed ±5 °C within the entire operating range.

5.6.2.2 Fan Speed Control with Digital Thermal Sensor

Digital Thermal Sensor based fan speed control (T_{FAN}) is a recommended feature to achieve optimal thermal performance. At the T_{FAN} temperature, Intel recommends full cooling capability well before the DTS reading reaches Tj_{MAX}.

5.6.3 PROCHOT# Signal

PROCHOT# (processor hot) is asserted when the processor temperature has reached its maximum operating temperature (Tj_{MAX}). Only a single PROCHOT# pin exists at a package level. When any core arrives at the TCC activation point, the PROCHOT# signal will be asserted. PROCHOT# assertion policies are independent of Adaptive Thermal Monitor enabling.

5.6.3.1 Bi-Directional PROCHOT#

By default, the PROCHOT# signal is set to bi-directional. However, it is recommended to configure the signal as an input only. When configured as an input or bi-directional signal, PROCHOT# can be used for thermally protecting other platform components in case the components overheat as well. When PROCHOT# is driven by an external device:

- The package will immediately transition to the lowest P-State (Pn) supported by the processor and graphics cores. This is contrary to the internally-generated Adaptive Thermal Monitor response.
- Clock modulation is not activated.

The processor package will remain at the lowest supported P-state until the system de-asserts PROCHOT#. The processor can be configured to generate an interrupt upon assertion and de-assertion of the PROCHOT# signal.

Note: When PROCHOT# is configured as a bi-directional signal and PROCHOT# is asserted by the processor, it is impossible for the processor to detect a system assertion of PROCHOT#. The system assertion will have to wait until the processor de-asserts PROCHOT# before PROCHOT# action can occur due to the system assertion. While the processor is hot and asserting PROCHOT#, the power is reduced; however, the reduction rate is slower than the system PROCHOT# response of < 100 us. The processor thermal control is staged in smaller increments over many milliseconds. This may cause several milliseconds of delay to a system assertion of PROCHOT# while the output function is asserted.

5.6.3.2 Voltage Regulator Protection using PROCHOT#

PROCHOT# may be used for thermal protection of voltage regulators (VR). System designers can create a circuit to monitor the VR temperature and assert PROCHOT# and, if enabled, activate the TCC when the temperature limit of the VR is reached. When PROCHOT# is configured as a bi-directional or input only signal, if the system assertion of PROCHOT# is recognized by the processor, it will result in an immediate transition to the lowest P-State (Pn) supported by the processor and graphics cores. Systems should still provide proper cooling for the VR and rely on bi-directional PROCHOT# only as a backup in case of system cooling failure. Overall, the system thermal design should allow the power delivery circuitry to operate within its temperature specification even while the processor is operating at its TDP.

5.6.3.3 Thermal Solution Design and PROCHOT# Behavior

With a properly designed and characterized thermal solution, it is anticipated that PROCHOT# will only be asserted for very short periods of time when running the most power intensive applications. The processor performance impact due to these brief periods of TCC activation is expected to be so minor that it would be immeasurable. However, an under-designed thermal solution that is not able to prevent excessive assertion of PROCHOT# in the anticipated ambient environment may:

- Cause a noticeable performance loss.
- Result in prolonged operation at or above the specified maximum junction temperature and affect the long-term reliability of the processor.
- May be incapable of cooling the processor even when the TCC is active continuously (in extreme situations).

5.6.3.4 Low-Power States and PROCHOT# Behavior

Depending on package power levels during package C-states, outbound PROCHOT# may de-assert while the processor is idle as power is removed from the signal. Upon wakeup, if the processor is still hot, the PROCHOT# will re-assert, although typically package idle state residency should resolve any thermal issues. The PECI interface is fully operational during all C-states and it is expected that the platform continues to manage processor core and package thermals even during idle states by regularly polling for thermal data over PECI.

5.6.3.5 THERMTRIP# Signal

Regardless of enabling the automatic or on-demand modes, in the event of a catastrophic cooling failure, the package will automatically shut down when the silicon has reached an elevated temperature that risks physical damage to the product. At this point the THERMTRIP# signal will go active.

5.6.3.6 Critical Temperature Detection

Critical Temperature detection is performed by monitoring the package temperature. This feature is intended for graceful shutdown before the THERMTRIP# is activated. However, the processor execution is not guaranteed between critical temperature and THERMTRIP#. If the Adaptive Thermal Monitor is triggered and the temperature remains high, a critical temperature status and sticky bit are latched in the PACKAGE_THERM_STATUS MSR 1B1h and the condition also generates a thermal interrupt, if enabled. For more details on the interrupt mechanism, refer to the *Intel® 64 and IA-32 Architectures Software Developer's Manual*.

5.6.4 On-Demand Mode

The processor provides an auxiliary mechanism that allows system software to force the processor to reduce its power consumption using clock modulation. This mechanism is referred to as "On-Demand" mode and is distinct from Adaptive Thermal Monitor and bi-directional PROCHOT#. The processor platforms must not rely on software usage of this mechanism to limit the processor temperature. On-Demand Mode can be accomplished using processor MSR or chipset I/O emulation. On-Demand Mode may be used in conjunction with the Adaptive Thermal Monitor. However, if the system software tries to enable On-Demand mode at the same time the TCC is engaged, the factory configured duty cycle of the TCC will override the duty cycle selected by the On-Demand mode. If the I/O based and MSR-based On-Demand modes are in conflict, the duty cycle selected by the I/O emulation-based On-Demand mode will take precedence over the MSR-based On-Demand Mode.

5.6.4.1 MSR Based On-Demand Mode

If Bit 4 of the IA32_CLOCK_MODULATION MSR is set to a 1, the processor will immediately reduce its power consumption using modulation of the internal core clock, independent of the processor temperature. The duty cycle of the clock modulation is programmable using bits [3:1] of the same IA32_CLOCK_MODULATION MSR. In this mode, the duty cycle can be programmed in either 12.5% or 6.25% increments (discoverable using CPUID). Thermal throttling using this method will modulate each processor core's clock independently.

5.6.4.2 I/O Emulation-Based On-Demand Mode

I/O emulation-based clock modulation provides legacy support for operating system software that initiates clock modulation through I/O writes to ACPI defined processor clock control registers on the chipset (PROC_CNT). Thermal throttling using this method will modulate all processor cores simultaneously.

5.6.5 Intel® Memory Thermal Management

The processor provides thermal protection for system memory by throttling memory traffic when using either DIMM modules or a memory down implementation. Two levels of throttling are supported by the processor – either a warm threshold or hot threshold that is customizable through memory mapped I/O registers. Throttling based on the warm threshold should be an intermediate level of throttling. Throttling based on the hot threshold should be the most severe. The amount of throttling is dynamically controlled by the processor.

Memory temperature can be acquired through an on-board thermal sensor (TS-on-Board), retrieved by an embedded controller and reported to the processor through the PECI 3.0 interface. This methodology is known as PECI injected temperatures and is a method of Closed Loop Thermal Management (CLTM). CLTM requires the use of a physical thermal sensor. EXTTS# is another method of CLTM; however, it is only capable of reporting memory thermal status to the processor. EXTTS# consists of two GPIO pins on the PCH where the state of the pins is communicated internally to the processor.

When a physical thermal sensor is not available to report temperature, the processor supports Open Loop Thermal Management (OLTM) that estimates the power consumed per rank of the memory using the processor DRAM power meter. A per rank power is associated with the warm and hot thresholds that, when exceeded, may trigger memory thermal throttling.

5.6.6 Scenario Design Power (SDP)

Scenario Design Power (SDP) is a usage-based design specification, and provides an additional reference design point for power constrained platforms. SDP is a specified power level under a specific scenario workload, temperature, and frequency.

Intel recommends setting POWER_LIMIT_1 (PL1) to the system cooling capability (SDP level, or higher). While the SDP specification is characterized at Tj of 80 °C, the functional limit for the product remains at Tj_{MAX}. Customers may choose to have the processor invoke TCC Activation Throttling at 80 °C, but is not required.

The processors that have SDP specified can still exceed SDP under certain workloads, such as TDP workloads. TDP power dissipation is still possible with the intended usage models, and protection mechanisms to handle levels beyond cooling capabilities are recommended. Intel recommends using such thermal control mechanisms to manage situations where power may exceed the thermal design capability.

Note: cTDP-Down mode is required for Intel® Core™ processor products in order to achieve SDP.

Note: Although SDP is defined at 80 °C, the TCC activation temperature is 100 °C, and may be changed in BIOS to 80 °C.

6.0 Signal Description

This chapter describes the processor signals. The signals are arranged in functional groups according to the associated interface or category. The following notations are used to describe the signal type.

Notation	Signal Type
I	Input pin
O	Output pin
I/O	Bi-directional Input/Output pin

The signal description also includes the type of buffer used for the particular signal (see the following table).

Table 25. Signal Description Buffer Types

Signal	Description
CMOS	CMOS buffers. 1.05V- tolerant
DDR3L/DDR3L-RS	DDR3L/DDR3L-RS buffers: 1.35 V-tolerant
LPDDR3	LPDDR3 buffers: 1.2 V- tolerant
A	Analog reference or output. May be used as a threshold voltage or for buffer compensation
GTL	Gunning Transceiver Logic signaling technology
VR Enable CMOS	Voltage Regulator Asynchronous CMOS output
Ref	Voltage reference signal
Asynchronous [1]	Signal has no timing relationship with any reference clock.
1. Qualifier for a buffer type.	

6.1 System Memory Interface Signals

Table 26. DDR3L / DDR3L-RS Memory Channel A Interface (Memory-Down / SO-DIMM) Signals

Signal Name	Description	Direction / Buffer Type
SA_BS[2:0]	**Bank Select:** These signals define which banks are selected within each SDRAM rank.	O
SA_WE#	**Write Enable Control Signal:** This signal is used with SA_RAS# and SA_CAS# (along with SA_CS#) to define the SDRAM Commands.	O

continued...

Signal Name	Description	Direction / Buffer Type
SA_RAS#	**RAS Control Signal:** This signal is used with SA_CAS# and SA_WE# (along with SA_CS#) to define the SRAM Commands.	O
SA_CAS#	**CAS Control Signal:** This signal is used with SA_RAS# and SA_WE# (along with SA_CS#) to define the SRAM Commands.	O
SA_DQSP[7:0] SA_DQSN[7:0]	**Data Strobes:** SA_DQS[7:0] and its complement signal group make up a differential strobe pair. The data is captured at the crossing point of SA_DQS[7:0] and its SA_DQS#[7:0] during read and write transactions.	I/O
SA_DQ[63:0]	**Data Bus:** Channel A data signal interface to the SDRAM data bus.	I/O
SA_MA[15:0]	**Memory Address:** These signals are used to provide the multiplexed row and column address to the SDRAM.	O
SA_CKP[1:0] SA_CKN[1:0]	**SDRAM Differential Clock:** Channel A SDRAM Differential clock signal pair. The crossing of the positive edge of SA_CKP and the negative edge of its complement SA_CKN are used to sample the command and control signals on the SDRAM.	O
SA_CS#[1:0]	**Chip Select:** (1 per rank). These signals are used to select particular SDRAM components during the active state. There is one Chip Select for each SDRAM rank.	O
SA_CKE[3:0]	**Clock Enable:** (1 per rank). These signals are used to: • Initialize the SDRAMs during power-up • Power down SDRAM ranks • Place all SDRAM ranks into and out of self-refresh during STR • When 1R DDR3L (SODIMM/MD) CKE[0] is used • When 2R DDR3L (SODIMM/MD) CKE[1:0] are used	O
SA_ODT	**On Die Termination:** Active Termination Control.	O

Table 27. DDR3L / DDR3L-RS Memory Channel B Interface (Memory-Down / SO-DIMM) Signals

Signal Name	Description	Direction / Buffer Type
SB_BS[2:0]	**Bank Select:** These signals define which banks are selected within each SDRAM rank.	O
SB_WE#	**Write Enable Control Signal:** This signal is used with SB_RAS# and SB_CAS# (along with SB_CS#) to define the SDRAM Commands.	O
SB_RAS#	**RAS Control Signal:** This signal is used with SB_CAS# and SB_WE# (along with SB_CS#) to define the SRAM Commands.	O
SB_CAS#	**CAS Control Signal:** This signal is used with SB_RAS# and SB_WE# (along with SB_CS#) to define the SRAM Commands.	O
SB_DQSP[7:0] SB_DQSN[7:0]	**Data Strobes:** SB_DQS[7:0] and its complement signal group make up a differential strobe pair. The data is captured at the crossing point of SB_DQS[7:0] and its SB_DQS#[7:0] during read and write transactions.	I/O
SB_DQ[63:0]	**Data Bus:** Channel A data signal interface to the SDRAM data bus.	I/O

continued...

Signal Name	Description	Direction / Buffer Type
SB_MA[15:0]	**Memory Address:** These signals are used to provide the multiplexed row and column address to the SDRAM.	O
SB_CKP[1:0] SB_CKN[1:0]	**SDRAM Differential Clock:** Channel B SDRAM Differential clock signal pair. The crossing of the positive edge of SB_CKP and the negative edge of its complement SB_CKN are used to sample the command and control signals on the SDRAM.	O
SB_CS#[1:0]	**Chip Select:** (1 per rank). These signals are used to select particular SDRAM components during the active state. There is one Chip Select for each SDRAM rank.	O
SB_CKE[3:0]	**Clock Enable:** (1 per rank). These signals are used to: • Initialize the SDRAMs during power-up • Power down SDRAM ranks • Place all SDRAM ranks into and out of self-refresh during STR • When 1R DDR3L (SODIMM/MD) CKE[0] is used • When 2R DDR3L (SODIMM/MD) CKE[1:0] are used	O
SB_ODT	**On Die Termination:** Active Termination Control.	O

Table 28. LPDDR3 Memory Channel A Interface (Memory-Down) Signals

Signal Name	Description	Direction / Buffer Type
SA_DQ[63:0]	**Data Bus:** Channel A data signal interface to the SDRAM data bus.	I/O
SA_DQSP[7:0] SA_DQSN[7:0]	**Data Strobes:** SA_DQS[7:0] and its complement signal group make up a differential strobe pair. The data is captured at the crossing point of SA_DQS[7:0] and its SA_DQS#[7:0] during read and write transactions.	I/O
SA_CAA[9:0]	**Command Address:** These signals are used to provide the multiplexed command and address to the SDRAM.	O
SA_CAB[9:0]	**Command Address:** These signals are used to provide the multiplexed command and address to the SDRAM.	O
SA_CKP[1:0] SA_CKN[1:0]	**SDRAM Differential Clock:** Channel A SDRAM Differential clock signal pair. The crossing of the positive edge of SA_CKP and the negative edge of its complement SA_CKN are used to sample the command and control signals on the SDRAM.	O
SA_CS#[1:0]	**Chip Select:** (1 per rank). These signals are used to select particular SDRAM components during the active state. There is one Chip Select for each SDRAM rank.	O
SA_CKE[3:0]	**Clock Enable:** (1 per rank). These signals are used to: • Initialize the SDRAMs during power-up • Power down SDRAM ranks • Place all SDRAM ranks into and out of self-refresh during STR • When 1R LPDDR3 CKE[0] and CKE[2] are used for Rank 0 • When 2R LPDDR3 CKE[0] and CKE[2] are used for Rank 0 & CKE[1] and CKE[3] are used for Rank 1	O
SA_ODT	**On Die Termination:** Active Termination Control.	O

Table 29. LPDDR3 Memory Channel B Interface (Memory-Down) Signals

Signal Name	Description	Direction / Buffer Type
SB_DQ[63:0]	**Data Bus:** Channel A data signal interface to the SDRAM data bus.	I/O
SB_DQSP[7:0] SB_DQSN[7:0]	**Data Strobes:** SB_DQS[7:0] and its complement signal group make up a differential strobe pair. The data is captured at the crossing point of SB_DQS[7:0] and its SB_DQS#[7:0] during read and write transactions.	I/O
SB_CAA[9:0]	**Command Address:** These signals are used to provide the multiplexed command and address to the SDRAM.	O
SB_CAB[9:0]	**Command Address:** These signals are used to provide the multiplexed command and address to the SDRAM.	O
SB_CKP[1:0] SB_CKN[1:0]	**SDRAM Differential Clock:** Channel A SDRAM Differential clock signal pair. The crossing of the positive edge of SB_CKP and the negative edge of its complement SB_CKN are used to sample the command and control signals on the SDRAM.	O
SB_CS#[1:0]	**Chip Select:** (1 per rank). These signals are used to select particular SDRAM components during the active state. There is one Chip Select for each SDRAM rank.	O
SB_CKE[3:0]	**Clock Enable:** (1 per rank). These signals are used to: • Initialize the SDRAMs during power-up • Power down SDRAM ranks. • Place all SDRAM into and out of self-refresh during STR. • When 1R LPDDR3 CKE[0] and CKE[2] are used for Rank0 • When 2R LPDDR3 CKE[0] and CKE[2] are used for Rank 0 and CKE[1] and CKE[3] are used for Rank 1	O
SB_ODT	**On Die Termination:** Active Termination Control.	O

6.2 Memory Compensation and Miscellaneous Signals

Table 30. LPDDR3 / DDR3L / DDR3L-RS Reference and Compensation Signals

Signal Name	Description	Direction / Buffer Type
SM_RCOMP[2:0]	**System Memory Impedance Compensation:**	I
SM_VREF_CA SM_VREF_DQ0 SM_VREF_DQ1	**Memory Channel A/B DIMM DQ Voltage Reference:** The output pins are connected to the MD/DIMMs, and holds VDDQ/2 as reference voltage.	O
SM_PG_CNTL1	**System Memory Power Gate Control:** This signal disables the platform memory VTT regulator in C8 and deeper and S3 states.	CMOS OUTPUT

6.3 Reset and Miscellaneous Signals

Table 31. Reset and Miscellaneous Signals

Signal Name	Description	Direction / Buffer Type
CFG[19:0]	**Configuration Signals:** The CFG signals have a default value of '1' if not terminated on the board. • **CFG[2:0]:** Reserved configuration lane. A test point may be placed on the board for these lanes. • **CFG[3]: MSR Privacy Bit Feature** — 1 = Debug capability is determined by IA32_Debug_Interface_MSR (C80h) bit[0] setting — 0 = IA32_Debug_Interface_MSR (C80h) bit[0] default setting overridden • **CFG[4]: eDP enable** — 1 = Disabled — 0 = Enabled • **CFG[19:5]:** Reserved configuration lanes. A test point may be placed on the board for these lands.	I/O GTL
CFG_RCOMP	Configuration resistance compensation. Use a 49.9 Ω ±1% resistor to ground.	—
FC_x	FC (Future Compatibility) signals are signals that are available for compatibility with other processors. A test point may be placed on the board for these lands.	
IST_TRIGGER	Signal is for IFDIM testing only.	I CMOS
IVR_ERROR	Signal is for debug. If both THERMTRIP# and this signal are simultaneously asserted, the processor has encountered an unrecoverable power delivery fault and has engaged automatic shutdown as a result.	O CMOS
RSVD RSVD_TP RSVD_NCTF	**RESERVED:** All signals that are RSVD and RSVD_NCTF must be left unconnected on the board. Intel recommends that all RSVD_TP signals have via test points.	No Connect Test Point Non-Critical to Function
TESTLO_x	TESTLO should be individually connected to V_{SS} through a resistor.	

6.4 embedded DisplayPort* (eDP*) Signals

Table 32. embedded Display Port* Signals

Signal Name	Description	Direction / Buffer Type
eDP_TXP[3:0] eDP_TXN[3:0]	embedded DisplayPort Transmit Differential Pair	O eDP
eDP_AUXP eDP_AUXN	embedded DisplayPort Auxiliary Differential Pair	O eDP
eDP_RCOMP	embedded DisplayPort Current Compensation	I/O A
eDP_DISP_UTIL	Low voltage multipurpose DISP_UTIL pin on the processor for backlight modulation control of embedded panels and S3D device control for active shutter glasses. This pin will co-exist with functionality similar to existing BKLTCTL pin on the PCH.	O Asynchronous CMOS

6.5 Display Interface Signals

Table 33. Display Interface Signals

Signal Name	Description	Direction / Buffer Type
DDIB_TXP[3:0] DDIB_TXN[3:0]	Digital Display Interface Transmit Differential Pair	O DP*/HDMI*
DDIC_TXP[3:0] DDIC_TXN[3:0]	Digital Display Interface Transmit Differential Pair	O DP*/HDMI*

6.6 Testability Signals

Table 34. Testability Signals

Signal Name	Description	Direction / Buffer Type
BPM#[7:0]	**Breakpoint and Performance Monitor Signals:** Outputs from the processor that indicate the status of breakpoints and programmable counters used for monitoring processor performance.	I/O GTL
PRDY#	**Processor Ready:** This signal is a processor output used by debug tools to determine processor debug readiness.	O GTL
PREQ#	**Processor Request:** This signal is used by debug tools to request debug operation of the processor.	I GTL
PROC_TCK	**Test Clock:** This signal provides the clock input for the processor Test Bus (also known as the Test Access Port). This signal must be driven low or allowed to float during power on Reset.	I GTL
PROC_TDI	**Processor Test Data In:** This signal transfers serial test data into the processor. This signal provides the serial input needed for JTAG specification support.	I GTL

continued...

Signal Name	Description	Direction / Buffer Type
PROC_TDO	**Processor Test Data Out:** This signal transfers serial test data out of the processor. This signal provides the serial output needed for JTAG specification support.	O Open Drain
PROC_TMS	**Processor Test Mode Select:** This is a JTAG specification supported signal used by debug tools.	I GTL
PROC_TRST#	**Processor Test Reset:** This signal resets the Test Access Port (TAP) logic. This signal must be driven low during power on Reset.	I GTL

6.7 Error and Thermal Protection Signals

Table 35. Error and Thermal Protection Signals

Signal Name	Description	Direction / Buffer Type
CATERR#	**Catastrophic Error:** This signal indicates that the system has experienced a catastrophic error and cannot continue to operate. The processor will set this for non-recoverable machine check errors or other unrecoverable internal errors. CATERR# is used for signaling the following types of errors: Legacy MCERRs, CATERR# is asserted for 16 BCLKs. Legacy IERRs, CATERR# remains asserted until warm or cold reset.	O GTL
PECI	**Platform Environment Control Interface:** A serial sideband interface to the processor, it is used primarily for thermal, power, and error management.	I/O Asynchronous
PROCHOT#	**Processor Hot:** PROCHOT# goes active when the processor temperature monitoring sensor(s) detects that the processor has reached its maximum safe operating temperature. This indicates that the processor Thermal Control Circuit (TCC) has been activated, if enabled. This signal can also be driven to the processor to activate the TCC.	GTL Input Open-Drain Output
THERMTRIP#	**Thermal Trip:** The processor protects itself from catastrophic overheating by use of an internal thermal sensor. This sensor is set well above the normal operating temperature to ensure that there are no false trips. The processor will stop all execution when the junction temperature exceeds approximately 130 °C. This is signaled to the system by the THERMTRIP# pin.	O Asynchronous OD

6.8 Power Sequencing Signals

Table 36. Power Sequencing Signals

Signal Name	Description	Direction / Buffer Type
PROCPWRGD	The processor requires this input signal to be a clean indication that the V_{CC} and V_{DDQ} power supplies are stable and within specifications. This requirement applies regardless of the S-state of the processor. 'Clean' implies that the signal will remain low (capable of sinking leakage current), without glitches, from the time that the power supplies are turned on until the supplies come within specification. The signal must then transition monotonically to a high state.	I Asynchronous CMOS
VCCST_PWRGD	The processor requires this input signal to be a clean indication that the V_{CCST} and V_{DDQ} power supplies are stable and within specifications. This single must have a valid level during both S0 and S3 power states. 'Clean' implies that the signal will remain low (capable of sinking leakage current), without glitches, from the time that the power supplies are turned on until the supplies come within specification. The signal must then transition monotonically to a high state."	I Asynchronous CMOS
PROC_DETECT#	**(Processor Detect):** This signal is pulled down directly (0 Ohms) on the processor package to ground. There is no connection to the processor silicon for this signal. System board designers may use this signal to determine if the processor is present.	—

6.9 Processor Power Signals

Table 37. Processor Power Signals

Signal Name	Description	Direction / Buffer Type
VCC	Processor main power rail.	Ref
VDDQ	Processor I/O supply voltage for DDR3L/DDR3L-RS/ LPDDR3.	Ref
VCCST	Sustain voltage for the processor in standby modes	Ref
VIDSOUT VIDSCLK VIDALERT#	VIDALERT#, VIDSCLK, and VIDSCLK comprise a three signal serial synchronous interface used to transfer power management information between the processor and the voltage regulator controllers.	I/O CMOS O CMOS I CMOS
VR_EN	Sideband output from the processor which controls disabling of the VR when the processor is in the C10 state. This signal will be used to disable the VR only if the processor is configured to support VR disabling using VR_CURRENT_CONFIG MSR (601h).	O VR Enable CMOS
VR_READY	Sideband signal which indicates to the processor that the external voltage regulator for the V_{CC} power rail is valid.	I CMOS

6.10 Sense Signals

Table 38. Sense Signals

Signal Name	Description	Direction / Buffer Type
VCC_SENSE VSS_SENSE	**VCC_SENSE and VSS_SENSE** provide an isolated, low-impedance connection to the processor input V_{CC} voltage and ground. The signals can be used to sense or measure voltage near the silicon.	O A

6.11 Ground and Non-Critical to Function (NCTF) Signals

Table 39. Ground and Non-Critical to Function (NCTF) Signals

Signal Name	Description	Direction / Buffer Type
VSS	Processor ground node	GND
VSS_NCTF	**Non-Critical to Function:** These signals are for package mechanical reliability.	—
DAISY_CHAIN_NCTF_[Ball #]	**Daisy Chain Non-Critical to Function:** These signals are for BGA solder joint reliability testing and are non-critical to function. These signals are connected on the processor package as follows: • Package A1 Corner • DAISY_CHAIN_NCTF_B2 to DAISY_CHAIN_NCTF_C1 • DAISY_CHAIN_NCTF_C2 to DAISY_CHAIN_NCTF_B3 • DAISY_CHAIN_NCTF_A3 to DAISY_CHAIN_NCTF_A4 • Package A63 Corner • DAISY_CHAIN_NCTF_A62 to DAISY_CHAIN_NCTF_A61 • DAISY_CHAIN_NCTF_B61 to DAISY_CHAIN_NCTF_B62 • DAISY_CHAIN_NCTF_B63 to DAISY_CHAIN_NCTF_A60 • Package AY1 Corner • DAISY_CHAIN_NCTF_AW1 to DAISY_CHAIN_NCTF_AW3 • DAISY_CHAIN_NCTF_AY3 to DAISY_CHAIN_NCTF_AW2 • DAISY_CHAIN_NCTF_AY2 to DAISY_CHAIN_NCTF_AV1 • Package AY63 Corner • DAISY_CHAIN_NCTF_AY60 to DAISY_CHAIN_NCTF_AW61 • DAISY_CHAIN_NCTF_AY61 to DAISY_CHAIN_NCTF_AW62 • DAISY_CHAIN_NCTF_AY62 to DAISY_CHAIN_NCTF_AW63	

6.12 Processor Internal Pull-Up / Pull-Down Terminations

Table 40. Processor Internal Pull-Up / Pull-Down Terminations

Signal Name	Pull Up / Pull Down	Rail	Value
BPM[7:0]	Pull Up	Vcc_{IO}	40–60 Ω
PREQ#	Pull Up	Vcc_{IO}	40–60 Ω
PROC_TDI	Pull Up	Vcc_{ST}	30–70 Ω

continued...

Signal Name	Pull Up / Pull Down	Rail	Value
PROC_TMS	Pull Up	Vcc_{ST}	30–70 Ω
CFG[19:0]	Pull Up	Vcc_{ST}	5–8 kΩ
CATERR#	Pull Up	Vcc_{ST}	30–70 Ω

7.0 Electrical Specifications

This chapter provides the processor electrical specifications including integrated voltage regulator (VR), V_{CC} Voltage Identification (VID), reserved and unused signals, signal groups, Test Access Points (TAP), and DC specifications.

7.1 Integrated Voltage Regulator

A new feature to the processor is the integration of platform voltage regulators into the processor. Due to this integration, the processor has one main voltage rail (V_{CC}) and a voltage rail for the memory interface (V_{DDQ}) , compared to six voltage rails on previous processors. The V_{CC} voltage rail will supply the integrated voltage regulators which in turn will regulate to the appropriate voltages for the cores, cache, system agent, and graphics. This integration allows the processor to better control on-die voltages to optimize between performance and power savings. The processor V_{CC} rail will remain a VID-based voltage with a loadline similar to the core voltage rail (also called V_{CC}) in previous processors.

7.2 Power and Ground Pins

The processor has VCC, VDDQ, and VSS (ground) pins for on-chip power distribution. All power pins must be connected to their respective processor power planes; all VSS pins must be connected to the system ground plane. Use of multiple power and ground planes is recommended to reduce I*R drop. The VCC pins must be supplied with the voltage determined by the processor **S**erial **V**oltage **ID**entification (SVID) interface. Table 41 on page 83 specifies the voltage level for the various VIDs.

7.3 V_{CC} Voltage Identification (VID)

The processor uses three signals for the serial voltage identification interface to support automatic selection of voltages. The following table specifies the voltage level corresponding to the 8-bit VID value transmitted over serial VID. A '1' in this table refers to a high voltage level and a '0' refers to a low voltage level. If the voltage regulation circuit cannot supply the voltage that is requested, the voltage regulator must disable itself. VID signals are CMOS push/pull drivers. See the *Voltage and Current Specifications* section for the DC specifications for these signals. The VID codes will change due to temperature and/or current load changes to minimize the power of the part. A voltage range is provided in the *Voltage and Current Specifications* section. The specifications are set so that one voltage regulator can operate with all supported frequencies.

Individual processor VID values may be set during manufacturing so that two devices at the same core frequency may have different default VID settings. This is shown in the VID range values in the *Voltage and Current Specifications* section. The processor provides the ability to operate while transitioning to an adjacent VID and its associated voltage. This will represent a DC shift in the loadline.

Table 41. Voltage Regulator (VR) 12.5 Voltage Identification

Bit 7	Bit 6	Bit 5	Bit 4	Bit 3	Bit 2	Bit 1	Bit 0	Hex	V_{CC}
0	0	0	0	0	0	0	0	00h	0.0000
0	0	0	0	0	0	0	1	01h	0.5000
0	0	0	0	0	0	1	0	02h	0.5100
0	0	0	0	0	0	1	1	03h	0.5200
0	0	0	0	0	1	0	0	04h	0.5300
0	0	0	0	0	1	0	1	05h	0.5400
0	0	0	0	0	1	1	0	06h	0.5500
0	0	0	0	0	1	1	1	07h	0.5600
0	0	0	0	1	0	0	0	08h	0.5700
0	0	0	0	1	0	0	1	09h	0.5800
0	0	0	0	1	0	1	0	0Ah	0.5900
0	0	0	0	1	0	1	1	0Bh	0.6000
0	0	0	0	1	1	0	0	0Ch	0.6100
0	0	0	0	1	1	0	1	0Dh	0.6200
0	0	0	0	1	1	1	0	0Eh	0.6300
0	0	0	0	1	1	1	1	0Fh	0.6400
0	0	0	1	0	0	0	0	10h	0.6500
0	0	0	1	0	0	0	1	11h	0.6600
0	0	0	1	0	0	1	0	12h	0.6700
0	0	0	1	0	0	1	1	13h	0.6800
0	0	0	1	0	1	0	0	14h	0.6900
0	0	0	1	0	1	0	1	15h	0.7000
0	0	0	1	0	1	1	0	16h	0.7100
0	0	0	1	0	1	1	1	17h	0.7200
0	0	0	1	1	0	0	0	18h	0.7300
0	0	0	1	1	0	0	1	19h	0.7400
0	0	0	1	1	0	1	0	1Ah	0.7500
0	0	0	1	1	0	1	1	1Bh	0.7600
0	0	0	1	1	1	0	0	1Ch	0.7700
0	0	0	1	1	1	0	1	1Dh	0.7800
0	0	0	1	1	1	1	0	1Eh	0.7900
0	0	0	1	1	1	1	1	1Fh	0.8000
0	0	1	0	0	0	0	0	20h	0.8100

continued...

Bit 7	Bit 6	Bit 5	Bit 4	Bit 3	Bit 2	Bit 1	Bit 0	Hex	V_{CC}
0	0	1	0	0	0	0	1	21h	0.8200
0	0	1	0	0	0	1	0	22h	0.8300
0	0	1	0	0	0	1	1	23h	0.8400
0	0	1	0	0	1	0	0	24h	0.8500
0	0	1	0	0	1	0	1	25h	0.8600
0	0	1	0	0	1	1	0	26h	0.8700
0	0	1	0	0	1	1	1	27h	0.8800
0	0	1	0	1	0	0	0	28h	0.8900
0	0	1	0	1	0	0	1	29h	0.9000
0	0	1	0	1	0	1	0	2Ah	0.9100
0	0	1	0	1	0	1	1	2Bh	0.9200
0	0	1	0	1	1	0	0	2Ch	0.9300
0	0	1	0	1	1	0	1	2Dh	0.9400
0	0	1	0	1	1	1	0	2Eh	0.9500
0	0	1	0	1	1	1	1	2Fh	0.9600
0	0	1	1	0	0	0	0	30h	0.9700
0	0	1	1	0	0	0	1	31h	0.9800
0	0	1	1	0	0	1	0	32h	0.9900
0	0	1	1	0	0	1	1	33h	1.0000
0	0	1	1	0	1	0	0	34h	1.0100
0	0	1	1	0	1	0	1	35h	1.0200
0	0	1	1	0	1	1	0	36h	1.0300
0	0	1	1	0	1	1	1	37h	1.0400
0	0	1	1	1	0	0	0	38h	1.0500
0	0	1	1	1	0	0	1	39h	1.0600
0	0	1	1	1	0	1	0	3Ah	1.0700
0	0	1	1	1	0	1	1	3Bh	1.0800
0	0	1	1	1	1	0	0	3Ch	1.0900
0	0	1	1	1	1	0	1	3Dh	1.1000
0	0	1	1	1	1	1	0	3Eh	1.1100
0	0	1	1	1	1	1	1	3Fh	1.1200
0	1	0	0	0	0	0	0	40h	1.1300
0	1	0	0	0	0	0	1	41h	1.1400

continued...

Bit 7	Bit 6	Bit 5	Bit 4	Bit 3	Bit 2	Bit 1	Bit 0	Hex	V_{CC}
0	1	0	0	0	0	1	0	42h	1.1500
0	1	0	0	0	0	1	1	43h	1.1600
0	1	0	0	0	1	0	0	44h	1.1700
0	1	0	0	0	1	0	1	45h	1.1800
0	1	0	0	0	1	1	0	46h	1.1900
0	1	0	0	0	1	1	1	47h	1.2000
0	1	0	0	1	0	0	0	48h	1.2100
0	1	0	0	1	0	0	1	49h	1.2200
0	1	0	0	1	0	1	0	4Ah	1.2300
0	1	0	0	1	0	1	1	4Bh	1.2400
0	1	0	0	1	1	0	0	4Ch	1.2500
0	1	0	0	1	1	0	1	4Dh	1.2600
0	1	0	0	1	1	1	0	4Eh	1.2700
0	1	0	0	1	1	1	1	4Fh	1.2800
0	1	0	1	0	0	0	0	50h	1.2900
0	1	0	1	0	0	0	1	51h	1.3000
0	1	0	1	0	0	1	0	52h	1.3100
0	1	0	1	0	0	1	1	53h	1.3200
0	1	0	1	0	1	0	0	54h	1.3300
0	1	0	1	0	1	0	1	55h	1.3400
0	1	0	1	0	1	1	0	56h	1.3500
0	1	0	1	0	1	1	1	57h	1.3600
0	1	0	1	1	0	0	0	58h	1.3700
0	1	0	1	1	0	0	1	59h	1.3800
0	1	0	1	1	0	1	0	5Ah	1.3900
0	1	0	1	1	0	1	1	5Bh	1.4000
0	1	0	1	1	1	0	0	5Ch	1.4100
0	1	0	1	1	1	0	1	5Dh	1.4200
0	1	0	1	1	1	1	0	5Eh	1.4300
0	1	0	1	1	1	1	1	5Fh	1.4400
0	1	1	0	0	0	0	0	60h	1.4500
0	1	1	0	0	0	0	1	61h	1.4600
0	1	1	0	0	0	1	0	62h	1.4700
0	1	1	0	0	0	1	1	63h	1.4800

continued...

Bit 7	Bit 6	Bit 5	Bit 4	Bit 3	Bit 2	Bit 1	Bit 0	Hex	V_{CC}
0	1	1	0	0	1	0	0	64h	1.4900
0	1	1	0	0	1	0	1	65h	1.5000
0	1	1	0	0	1	1	0	66h	1.5100
0	1	1	0	0	1	1	1	67h	1.5200
0	1	1	0	1	0	0	0	68h	1.5300
0	1	1	0	1	0	0	1	69h	1.5400
0	1	1	0	1	0	1	0	6Ah	1.5500
0	1	1	0	1	0	1	1	6Bh	1.5600
0	1	1	0	1	1	0	0	6Ch	1.5700
0	1	1	0	1	1	0	1	6Dh	1.5800
0	1	1	0	1	1	1	0	6Eh	1.5900
0	1	1	0	1	1	1	1	6Fh	1.6000
0	1	1	1	0	0	0	0	70h	1.6100
0	1	1	1	0	0	0	1	71h	1.6200
0	1	1	1	0	0	1	0	72h	1.6300
0	1	1	1	0	0	1	1	73h	1.6400
0	1	1	1	0	1	0	0	74h	1.6500
0	1	1	1	0	1	0	1	75h	1.6600
0	1	1	1	0	1	1	0	76h	1.6700
0	1	1	1	0	1	1	1	77h	1.6800
0	1	1	1	1	0	0	0	78h	1.6900
0	1	1	1	1	0	0	1	79h	1.7000
0	1	1	1	1	0	1	0	7Ah	1.7100
0	1	1	1	1	0	1	1	7Bh	1.7200
0	1	1	1	1	1	0	0	7Ch	1.7300
0	1	1	1	1	1	0	1	7Dh	1.7400
0	1	1	1	1	1	1	0	7Eh	1.7500
0	1	1	1	1	1	1	1	7Fh	1.7600
1	0	0	0	0	0	0	0	80h	1.7700
1	0	0	0	0	0	0	1	81h	1.7800
1	0	0	0	0	0	1	0	82h	1.7900
1	0	0	0	0	0	1	1	83h	1.8000
1	0	0	0	0	1	0	0	84h	1.8100
1	0	0	0	0	1	0	1	85h	1.8200

continued...

Bit 7	Bit 6	Bit 5	Bit 4	Bit 3	Bit 2	Bit 1	Bit 0	Hex	V_{CC}
1	0	0	0	0	1	1	0	86h	1.8300
1	0	0	0	0	1	1	1	87h	1.8400
1	0	0	0	1	0	0	0	88h	1.8500
1	0	0	0	1	0	0	1	89h	1.8600
1	0	0	0	1	0	1	0	8Ah	1.8700
1	0	0	0	1	0	1	1	8Bh	1.8800
1	0	0	0	1	1	0	0	8Ch	1.8900
1	0	0	0	1	1	0	1	8Dh	1.9000
1	0	0	0	1	1	1	0	8Eh	1.9100
1	0	0	0	1	1	1	1	8Fh	1.9200
1	0	0	1	0	0	0	0	90h	1.9300
1	0	0	1	0	0	0	1	91h	1.9400
1	0	0	1	0	0	1	0	92h	1.9500
1	0	0	1	0	0	1	1	93h	1.9600
1	0	0	1	0	1	0	0	94h	1.9700
1	0	0	1	0	1	0	1	95h	1.9800
1	0	0	1	0	1	1	0	96h	1.9900
1	0	0	1	0	1	1	1	97h	2.0000
1	0	0	1	1	0	0	0	98h	2.0100
1	0	0	1	1	0	0	1	99h	2.0200
1	0	0	1	1	0	1	0	9Ah	2.0300
1	0	0	1	1	0	1	1	9Bh	2.0400
1	0	0	1	1	1	0	0	9Ch	2.0500
1	0	0	1	1	1	0	1	9Dh	2.0600
1	0	0	1	1	1	1	0	9Eh	2.0700
1	0	0	1	1	1	1	1	9Fh	2.0800
1	0	1	0	0	0	0	0	A0h	2.0900
1	0	1	0	0	0	0	1	A1h	2.1000
1	0	1	0	0	0	1	0	A2h	2.1100
1	0	1	0	0	0	1	1	A3h	2.1200
1	0	1	0	0	1	0	0	A4h	2.1300
1	0	1	0	0	1	0	1	A5h	2.1400
1	0	1	0	0	1	1	0	A6h	2.1500
1	0	1	0	0	1	1	1	A7h	2.1600

continued...

Bit 7	Bit 6	Bit 5	Bit 4	Bit 3	Bit 2	Bit 1	Bit 0	Hex	V_{CC}
1	0	1	0	1	0	0	0	A8h	2.1700
1	0	1	0	1	0	0	1	A9h	2.1800
1	0	1	0	1	0	1	0	AAh	2.1900
1	0	1	0	1	0	1	1	ABh	2.2000
1	0	1	0	1	1	0	0	ACh	2.2100
1	0	1	0	1	1	0	1	ADh	2.2200
1	0	1	0	1	1	1	0	AEh	2.2300
1	0	1	0	1	1	1	1	AFh	2.2400
1	0	1	1	0	0	0	0	B0h	2.2500
1	0	1	1	0	0	0	1	B1h	2.2600
1	0	1	1	0	0	1	0	B2h	2.2700
1	0	1	1	0	0	1	1	B3h	2.2800
1	0	1	1	0	1	0	0	B4h	2.2900
1	0	1	1	0	1	0	1	B5h	2.3000
1	0	1	1	0	1	1	0	B6h	2.3100
1	0	1	1	0	1	1	1	B7h	2.3200
1	0	1	1	1	0	0	0	B8h	2.3300
1	0	1	1	1	0	0	1	B9h	2.3400
1	0	1	1	1	0	1	0	BAh	2.3500
1	0	1	1	1	0	1	1	BBh	2.3600
1	0	1	1	1	1	0	0	BCh	2.3700
1	0	1	1	1	1	0	1	BDh	2.3800
1	0	1	1	1	1	1	0	BEh	2.3900
1	0	1	1	1	1	1	1	BFh	2.4000
1	1	0	0	0	0	0	0	C0h	2.4100
1	1	0	0	0	0	0	1	C1h	2.4200
1	1	0	0	0	0	1	0	C2h	2.4300
1	1	0	0	0	0	1	1	C3h	2.4400
1	1	0	0	0	1	0	0	C4h	2.4500
1	1	0	0	0	1	0	1	C5h	2.4600
1	1	0	0	0	1	1	0	C6h	2.4700
1	1	0	0	0	1	1	1	C7h	2.4800
1	1	0	0	1	0	0	0	C8h	2.4900
1	1	0	0	1	0	0	1	C9h	2.5000

continued...

Bit 7	Bit 6	Bit 5	Bit 4	Bit 3	Bit 2	Bit 1	Bit 0	Hex	V_{CC}
1	1	0	0	1	0	1	0	CAh	2.5100
1	1	0	0	1	0	1	1	CBh	2.5200
1	1	0	0	1	1	0	0	CCh	2.5300
1	1	0	0	1	1	0	1	CDh	2.5400
1	1	0	0	1	1	1	0	CEh	2.5500
1	1	0	0	1	1	1	1	CFh	2.5600
1	1	0	1	0	0	0	0	D0h	2.5700
1	1	0	1	0	0	0	1	D1h	2.5800
1	1	0	1	0	0	1	0	D2h	2.5900
1	1	0	1	0	0	1	1	D3h	2.6000
1	1	0	1	0	1	0	0	D4h	2.6100
1	1	0	1	0	1	0	1	D5h	2.6200
1	1	0	1	0	1	1	0	D6h	2.6300
1	1	0	1	0	1	1	1	D7h	2.6400
1	1	0	1	1	0	0	0	D8h	2.6500
1	1	0	1	1	0	0	1	D9h	2.6600
1	1	0	1	1	0	1	0	DAh	2.6700
1	1	0	1	1	0	1	1	DBh	2.6800
1	1	0	1	1	1	0	0	DCh	2.6900
1	1	0	1	1	1	0	1	DDh	2.7000
1	1	0	1	1	1	1	0	DEh	2.7100
1	1	0	1	1	1	1	1	DFh	2.7200
1	1	1	0	0	0	0	0	E0h	2.7300
1	1	1	0	0	0	0	1	E1h	2.7400
1	1	1	0	0	0	1	0	E2h	2.7500
1	1	1	0	0	0	1	1	E3h	2.7600
1	1	1	0	0	1	0	0	E4h	2.7700
1	1	1	0	0	1	0	1	E5h	2.7800
1	1	1	0	0	1	1	0	E6h	2.7900
1	1	1	0	0	1	1	1	E7h	2.8000
1	1	1	0	1	0	0	0	E8h	2.8100
1	1	1	0	1	0	0	1	E9h	2.8200
1	1	1	0	1	0	1	0	EAh	2.8300
1	1	1	0	1	0	1	1	EBh	2.8400

continued...

Bit 7	Bit 6	Bit 5	Bit 4	Bit 3	Bit 2	Bit 1	Bit 0	Hex	V_{CC}
1	1	1	0	1	1	0	0	ECh	2.8500
1	1	1	0	1	1	0	1	EDh	2.8600
1	1	1	0	1	1	1	0	EEh	2.8700
1	1	1	0	1	1	1	1	EFh	2.8800
1	1	1	1	0	0	0	0	F0h	2.8900
1	1	1	1	0	0	0	1	F1h	2.9000
1	1	1	1	0	0	1	0	F2h	2.9100
1	1	1	1	0	0	1	1	F3h	2.9200
1	1	1	1	0	1	0	0	F4h	2.9300
1	1	1	1	0	1	0	1	F5h	2.9400
1	1	1	1	0	1	1	0	F6h	2.9500
1	1	1	1	0	1	1	1	F7h	2.9600
1	1	1	1	1	0	0	0	F8h	2.9700
1	1	1	1	1	0	0	1	F9h	2.9800
1	1	1	1	1	0	1	0	FAh	2.9900
1	1	1	1	1	0	1	1	FBh	3.0000
1	1	1	1	1	1	0	0	FCh	3.0100
1	1	1	1	1	1	0	1	FDh	3.0200
1	1	1	1	1	1	1	0	FEh	3.0300
1	1	1	1	1	1	1	1	FFh	3.0400

7.4 Reserved or Unused Signals

The following are the general types of reserved (RSVD) signals and connection guidelines:

- RSVD – these signals should not be connected
- RSVD_TP – these signals should be routed to a test point
- RSVD_NCTF – these signals are non-critical to function and may be left un-connected

Arbitrary connection of these signals to VCC, VDDQ, VSS, or to any other signal (including each other) may result in component malfunction or incompatibility with future processors. See Signal Description on page 72 for a pin listing of the processor and the location of all reserved signals.

For reliable operation, always connect unused inputs or bi-directional signals to an appropriate signal level. Unused active high inputs should be connected through a resistor to ground (VSS). Unused outputs maybe left unconnected; however, this may interfere with some Test Access Port (TAP) functions, complicate debug probing, and prevent boundary scan testing. A resistor must be used when tying bi-directional signals to power or ground. When tying any signal to power or ground, a resistor will also allow for system testability.

7.5 Signal Groups

Signals are grouped by buffer type and similar characteristics as listed in the following table. The buffer type indicates which signaling technology and specifications apply to the signals. All the differential signals and selected DDR3L/DDR3L-RS/LPDDR3 and Control Sideband signals have On-Die Termination (ODT) resistors. Some signals do not have ODT and need to be terminated on the board.

Note: All Control Sideband Asynchronous signals are required to be asserted/de-asserted for at least 10 BCLKs with maximum Trise/Tfall of 6 ns for the processor to recognize the proper signal state. See the DC Specifications section and AC Specifications section.

Table 42. Signal Groups

Signal Group	Type	Signals	
DDR3L / DDR3L-RS / LPDDR3 Reference Clocks [2]			
Differential	DDR3L/DDR3L-RS/ LPDDR3 Output	SA_CKP[1:0], SA_CKN[1:0], SB_CKP[1:0], SB_CKN[1:0]	
DDR3L / DDR3L-RS/LPDDR3 Command Signals [2]			
Single ended	DDR3L/DDR3L-RS/ LPDDR3 Output	DDR3L/DDR3L-RS Mode	LPDDR3 Mode
		SA_BS2, SB_BS2	SA_CAA5, SB_CAA5
		SA_BS1, SB_BS1	SA_CAB6, SB_CAB6
		SA_BS0, SB_BS0	SA_CAB4, SB_CAB4
		SA_WE#, SB_WE#	SA_CAB2, SB_CAB2
		SA_RAS#, SB_RAS#	SA_CAB3, SB_CAB3
		SA_CAS#, SB_CAS#	SA_CAB1, SB_CAB1

continued...

Signal Group	Type	Signals	
		SA_MA15, SB_MA15	SA_CAA8, SB_CAA8
		SA_MA14, SB_MA14	SA_CAA9, SB_CAA9
		SA_MA13, SB_MA13	SA_CAB0, SB_CAB0
		SA_MA12, SB_MA12	SA_CAA6, SB_CAA6
		SA_MA11, SB_MA11	SA_CAA7, SB_CAA7
		SA_MA10, SB_MA10	SA_CAB7, SB_CAB7
		SA_MA9, SB_MA9	SA_CAA1, SB_CAA1
		SA_MA8, SB_MA8	SA_CAA3, SB_CAA3
		SA_MA7, SB_MA7	SA_CAA4, SB_CAA4
		SA_MA6, SB_MA6	SA_CAA2, SB_CAA2
		SA_MA5, SB_MA5	SA_CAA0, SB_CAA0
		SA_MA4, SB_MA4	N/A
		SA_MA3, SB_MA3	N/A
		SA_MA2, SB_MA2	SA_CAB5, SB_CAB5
		SA_MA1, SB_MA1	SA_CAB8, SB_CAB8
		SA_MA0, SB_MA0	SA_CAB9, SB_CAB9
DDR3L / DDR3L-RS Control Signals [2]			
Single ended	DDR3L/DDR3L-RS Output	SA_CKE[3:0], SB_CKE[3:0], SA_CS#[1:0], SB_CS#[1:0], SA_ODT0, SB_ODT0, SM_PG_CNTL1	
DDR3L / DDR3L-RS Data Signals [2]			
Single ended	DDR3L/DDR3L-RS Bi-directional	SA_DQ[63:0], SB_DQ[63:0]	
Differential	DDR3L/DDR3L-RS Bi-directional	SA_DQSP[7:0], SA_DQSN[7:0], SB_DQSP[7:0], SB_DQSN[7:0]	
DDR3L / DDR3L-RS Reference Voltage Signals			
	DDR3L/DDR3L-RS Output	SM_VREF_CA, SM_VREF_DQ1, SM_VREF_DQ0	
Testability (ITP/XDP)			
Single ended	GTL Input	PROC_TCK, PROC_TDI, PROC_TMS, PROC_TRST#	
Single ended	GTL	PROC_TDO	
Single ended	GTL	BPM#[7:0]	
Single ended	GTL	PREQ#	
Single ended	GTL	PRDY#	
Control Sideband			
Single ended	GTL Input/Open Drain Output	PROCHOT#	
Single ended	Asynchronous CMOS Output	IVR_ERROR	
Single ended	Open Drain Output	THERMTRIP#	

continued...

Signal Group	Type	Signals
Single ended	GTL	CATERR#
Single ended	Asynchronous CMOS Input	RESET#, PROCPWRGD, PWR_DEBUG# , VCCST_PWRGD
Single ended	Asynchronous Bi-directional	PECI
Single ended	GTL Bi-directional	CFG[19:0]
Voltage Regulator		
Single ended	VR Enable CMOS Output	VR_EN
Single ended	CMOS Input	VR_READY
Single ended	CMOS Input	VIDALERT#
Single ended	Open Drain Output	VIDSCLK
Single ended	CMOS I/O	VIDSOUT
Differential	Analog Output	VCC_SENSE, VSS_SENSE
Power / Ground / Other		
Single ended	Power	VCC, VDDQ, VCCST
	Ground	VSS, VSS_NCTF [3]
	No Connect	RSVD, RSVD_NCTF
	Test Point	RSVD_TP
	Other	DAISY_CHAIN_NCTF_[ball #]
Digital Display Interface		
Differential	DDI Output	DDIB_TXP[3:0], DDIB_TXN[3:0], DDIC_TXP[3:0], DDIC_TXN[3:0]]

Notes: 1. See Signal Description on page 72 for signal description details.
2. SA and SB refer to DDR3L/DDR3L-RS Channel A and DDR3L/DDR3L-RS Channel B.

7.6 Test Access Port (TAP) Connection

Due to the voltage levels supported by other components in the Test Access Port (TAP) logic, Intel recommends the processor be first in the TAP chain, followed by any other components within the system. A translation buffer should be used to connect to the rest of the chain unless one of the other components is capable of accepting an input of the appropriate voltage. Two copies of each signal may be required with each driving a different voltage level.

The processor supports Boundary Scan (JTAG) IEEE 1149.1-2001 and IEEE 1149.6-2003 standards. A few of the I/O pins may support only one of those standards.

7.7 DC Specifications

The processor DC specifications in this section are defined at the processor pins, unless noted otherwise. See Signal Description on page 72 for the processor pin listings and signal definitions.

- The DC specifications for the DDR3L/DDR3L-RS/LPDDR3 signals are listed in the *Voltage and Current Specifications* section.
- The *Voltage and Current Specifications* section lists the DC specifications for the processor and are valid only while meeting specifications for junction temperature, clock frequency, and input voltages. Read all notes associated with each parameter.
- AC tolerances for all DC rails include dynamic load currents at switching frequencies up to 1 MHz.

7.8 Voltage and Current Specifications

Table 43. Processor Core Active and Idle Mode DC Voltage and Current Specifications

Symbol	Parameter	Segment	Min	Typ	Max	Unit	Note[1]
Operating Voltage	Voltage Range for Processor Active Operating Mode	All	1.6	—	1.84	V	1, 2, 7
Idle Voltage	Voltage Range for Processor Idle Mode (Package C6/C7)	All	1.5	—	1.65	V	1, 2, 7
I_{CCMAX}	Maximum Processor Core I_{CC}	U-Processors 28W	—	—	40	A	4, 6, 7
		U-Processors 15W	—	—	32		
		Y-Processors 11.5W (6W SDP / 4.5W SDP)	—	—	25		
TOL_{VCC}	Voltage Tolerance	PS0, PS1	—	—	±20	mV	6, 8
		PS2, PS3	—	—	±20		
Ripple	Ripple Tolerance	PS0	—	—	±15	mV	6, 8
		PS1	—	—	±15		
		PS2	—	—	+50/-15		
		PS3	—	—	+60/-15		
R_DC_LL	Loadline slope within the VR regulation loop capability	—	—	- 2.0	—	mV	—
R_AC_LL	Loadline slope in response to dynamic load increase events	—	—	- 7.0	—	mΩ	—

continued...

Symbol	Parameter	Segment	Min	Typ	Max	Unit	Note[1]
T_OVS_Max	Max Overshoot time	—	—	—	500	µs	—
V_OVS	Max Overshoot	—	—	—	200	mV	—

Notes: 1. Unless otherwise noted, all specifications in this table are based on estimates and simulations or empirical data.
2. Each processor is programmed with a maximum valid voltage identification value (VID) that is set at manufacturing and cannot be altered. Individual maximum VID values are calibrated during manufacturing such that two processors at the same frequency may have different settings within the VID range. Note that this differs from the VID employed by the processor during a power management event (Adaptive Thermal Monitor, Enhanced Intel SpeedStep Technology, or Low-Power States).
3. The voltage specification requirements are measured across VCC_SENSE and VSS_SENSE lands at the socket with a 20 MHz bandwidth oscilloscope, 1.5 pF maximum probe capacitance, and 1 MΩ minimum impedance. The maximum length of ground wire on the probe should be less than 5 mm. Ensure external noise from the system is not coupled into the oscilloscope probe.
4. Processor core VR to be designed to electrically support this current.
5. Processor core VR to be designed to thermally support this current indefinitely.
6. Long term reliability cannot be assured if tolerance, ripple, and core noise parameters are violated.
7. Long term reliability cannot be assured in conditions above or below Maximum/Minimum functional limits.
8. PSx refers to the voltage regulator power state as set by the SVID protocol.

Table 44. Memory Controller (V_{DDQ}) Supply DC Voltage and Current Specifications

Symbol	Parameter	Min	Typ	Max	Unit	Note
$V_{DDQ\ (DDR3L/DDR3L\text{-}RS)}$	Processor I/O supply voltage for DDR3L/DDR3L-RS	—	1.35	—	V	2, 3
$V_{DDQ\ (LPDDR3)}$	Processor I/O supply voltage for LPDDR3	—	1.20	—	V	2, 3
TOL_{DDQ}	VDDQ Tolerance (AC+DC)	-5	—	5	%	2, 3
$Icc_{MAX_VDDQ\ (DDR3L/DDR3L\text{-}RS)}$	Max Current for V_{DDQ} Rail (DDR3L/DDR3L-RS)	—	—	1.4	A	1
$Icc_{MAX_VDDQ\ (LPDDR3)}$	Max Current for V_{DDQ} Rail (LPDDR3)	—	—	1.1	A	1

Notes: 1. The current supplied to the DIMM modules is not included in this specification.
2. Includes AC and DC error, where the AC noise is bandwidth limited to under 20 MHz.
3. No requirement on the breakdown of AC versus DC noise.

Table 45. Vcc Sustain (Vcc_{ST}) Supply DC Voltage and Current Specifications

Symbol	Parameter	Min	Typ	Max	Units	Notes
Vcc_{ST}	Processor Vcc Sustain supply voltage	- 5%	1.05	+ 5%	V	
Icc_{MAX_VccST}	Maximum Current for Vcc_{ST}	—	—	100	mA	

Table 46. DDR3L / DDR3L-RS Signal Group DC Specifications

Symbol	Parameter	Min	Typ	Max	Units	Notes[1]
V_{IL}	Input Low Voltage	—	$V_{DDQ}/2$	$0.43*V_{DDQ}$	V	2, 4, 11
V_{IH}	Input High Voltage	$0.57*V_{DDQ}$	$V_{DDQ}/2$	—	V	3, 11
V_{IL}	Input Low Voltage (SM_DRAMPWROK)	—	—	$0.15*V_{DDQ}$	V	—
V_{IH}	Input High Voltage (SM_DRAMPWROK)	$0.45*V_{DDQ}$	—	1.0	V	10, 12
$R_{ON_UP(DQ)}$	DDR3L/DDR3L-RS Data Buffer pull-up Resistance	20	26	32	Ω	5, 11
$R_{ON_DN(DQ)}$	DDR3L/DDR3L-RS Data Buffer pull-down Resistance	20	26	32	Ω	5, 11
$R_{ODT(DQ)}$	DDR3L/DDR3L-RS On-die termination equivalent resistance for data signals	38	50	62	Ω	11
$V_{ODT(DC)}$	DDR3L/DDR3L-RS On-die termination DC working point (driver set to receive mode)	$0.45*V_{DDQ}$	$0.5*V_{DDQ}$	$0.55*V_{DDQ}$	V	11
$R_{ON_UP(CK)}$	DDR3L/DDR3L-RS Clock Buffer pull-up Resistance	20	26	32	Ω	5, 11, 13
$R_{ON_DN(CK)}$	DDR3L/DDR3L-RS Clock Buffer pull-down Resistance	20	26	32	Ω	5, 11, 13
$R_{ON_UP(CMD)}$	DDR3L/DDR3L-RS Command Buffer pull-up Resistance	15	20	25	Ω	5, 11, 13
$R_{ON_DN(CMD)}$	DDR3L/DDR3L-RS Command Buffer pull-down Resistance	15	20	25	Ω	5, 11, 13
$R_{ON_UP(CTL)}$	DDR3L/DDR3L-RS Control Buffer pull-up Resistance	19	25	31	Ω	5, 11, 13
$R_{ON_DN(CTL)}$	DDR3L/DDR3L-RS Control Buffer pull-down Resistance	19	25	31	Ω	5, 11, 13
$R_{ON_UP(SM_PG_CNTL1)}$	System Memory Power Gate Control Buffer Pull-Up Resistance	40	80	130	Ω	13
$R_{ON_DN(SM_PG_CNTL1)}$	System Memory Power Gate Control Buffer Pull-Down Resistance	40	80	130	Ω	13
I_{LI}	Input Leakage Current (DQ, CK) 0V $0.2*V_{DDQ}$ $0.8*V_{DDQ}$	—	—	0.7	mA	—

continued...

Symbol	Parameter	Min	Typ	Max	Units	Notes[1]
I_{LI}	Input Leakage Current (CMD, CTL) 0V $0.2*V_{DDQ}$ $0.8*V_{DDQ}$	—	—	1.0	mA	—
SM_RCOMP0	Command COMP Resistance	198	200	202	Ω	8
SM_RCOMP1	Data COMP Resistance	118.8	120	121.2	Ω	8
SM_RCOMP2	ODT COMP Resistance	99	100	101	Ω	8

Notes:
1. Unless otherwise noted, all specifications in this table apply to all processor frequencies.
2. V_{IL} is defined as the maximum voltage level at a receiving agent that will be interpreted as a logical low value.
3. V_{IH} is defined as the minimum voltage level at a receiving agent that will be interpreted as a logical high value.
4. V_{IH} and V_{OH} may experience excursions above V_{DDQ}. However, input signal drivers must comply with the signal quality specifications.
5. This is the pull up/down driver resistance.
6. R_{TERM} is the termination on the DIMM and in not controlled by the processor.
7. The minimum and maximum values for these signals are programmable by BIOS to one of the two sets.
8. SM_RCOMPx resistance must be provided on the system board with 1% resistors. SM_RCOMPx resistors are to V_{SS}.
9. SM_DRAMPWROK rise and fall time must be < 50 ns measured between V_{DDQ} *0.15 and V_{DDQ} *0.47.
10. SM_VREF is defined as $V_{DDQ}/2$.
11. Maximum-minimum range is correct; however, center point is subject to change during MRC boot training.
12. Processor may be damaged if V_{IH} exceeds the maximum voltage for extended periods.
13. The MRC during boot training might optimize R_{ON} outside the range specified.

Table 47. LPDDR3 Signal Group DC Specifications

Symbol	Parameter	Min	Typ.	Max	Unit	Note
V_{IL}	Input Low Voltage	—	V_{DDQ} /2	$0.43*V_{DDQ}$	V	2, 4, 12
V_{IH}	Input High Voltage	$0.57*V_{DDQ}$	V_{DDQ} /2	—	V	3, 11
V_{IL}	Input Low Voltage (SM_DRAMPWROK)	—	—	$0.15*V_{DDQ}$	V	—
V_{IH}	Input High Voltage (SM_DRAMPWROK)	$0.45*V_{DDQ}$	—	$1.0*V_{DDQ}$	V	10, 12
$R_{ON_UP(DQ)}$	LPDDR3 Data Buffer pull-up Resistance	30	40	50	Ω	5, 11
$R_{ON_DN(DQ)}$	LPDDR3 Data Buffer pull-down Resistance	30	40	50	Ω	5, 11
$R_{ODT(DQ)}$	LPDDR3 On-die termination equivalent resistance for data signals	150	200	250	Ω	11
$V_{ODT(DC)}$	LPDDR3 On-die termination DC working point (driver set to receive mode)	$0.45*V_{DDQ}$	$0.5*V_{DDQ}$	$0.55*V_{DDQ}$	V	11
$R_{ON_UP(CK)}$	LPDDR3 Clock Buffer pull-up Resistance	30	40	50	Ω	5, 11

continued...

Symbol	Parameter	Min	Typ.	Max	Unit	Note
$R_{ON_DN(CK)}$	LPDDR3 Clock Buffer pull-down Resistance	30	40	50	Ω	5, 11
$R_{ON_UP(CMD)}$	LPDDR3 Command Buffer pull-up Resistance	19	25	31	Ω	5, 11
$R_{ON_DN(CMD)}$	LPDDR3 Command Buffer pull-down Resistance	19	25	31	Ω	5, 11
$R_{ON_UP(CTL)}$	LPDDR3 Control Buffer pull-up Resistance	19	25	31	Ω	5, 11
$R_{ON_DN(CTL)}$	LPDDR3 Control Buffer pull-down Resistance	19	25	31	Ω	5, 11
$R_{ON_UP(RST)}$	LPDDR3 Reset Buffer pull-up Resistance	40	80	130	Ω	—
$R_{ON_DN(RST)}$	LPDDR3 Reset Buffer pull-up Resistance	40	80	130	Ω	—
I_{LI}	Input Leakage Current (DQ, CK) 0V 0.2* V_{DDQ} 0.8*V_{DDQ}	—	—	0.4	mA	—
I_{LI}	Input Leakage Current (CMD,CTL) 0V 0.2*V_{DDQ} 0.8*V_{DDQ}	—	—	0.6	mA	—
SM_RCOMP0	ODT COMP Resistance	198	200	202	Ω	8
SM_RCOMP1	Data COMP Resistance	118.8	120	121.2	Ω	8
SM_RCOMP2	Command COMP Resistance	99	100	101	Ω	8

Notes:
1. Unless otherwise noted, all specifications in this table apply to all processor frequencies.
2. V_{IL} is defined as the maximum voltage level at a receiving agent that will be interpreted as a logical low value.
3. V_{IH} is defined as the minimum voltage level at a receiving agent that will be interpreted as a logical high value.
4. V_{IH} and V_{OH} may experience excursions above V_{DDQ}. However, input signal drivers must comply with the signal quality specifications.
5. This is the pull up/down driver resistance.
6. RTERM is the termination on the DIMM and in not controlled by the processor.
7. The minimum and maximum values for these signals are programmable by BIOS to one of the two sets.
8. SM_RCOMPx resistance must be provided on the system board with 1% resistors. SM_RCOMPx resistors are to V_{SS}.
9. SM_DRAMPWROK must have a maximum of 15 ns rise or fall time over V_{DDQ} * 0.30 ±100 mV and the edge must be monotonic.
10. SM_VREF is defined as $V_{DDQ}/2$
11. Maximum-minimum range is correct; however, center point is subject to change during MRC boot training.
12. Processor may be damaged if V_{IH} exceeds the maximum voltage for extended periods.

Table 48. Digital Display Interface Group DC Specifications

Symbol	Parameter	Min	Typ	Max	Units
V_{IL}	HPD Input Low Voltage	—	—	0.8	V
V_{IH}	HPD Input High Voltage	2.25	—	3.6	V
Vaux(Tx)	Aux peak-to-peak voltage at transmitting device	0.39	—	1.38	V
Vaux(Rx)	Aux peak-to-peak voltage at receiving device	0.32	—	1.36	V

Table 49. embedded DisplayPort* (eDP*) Group DC Specifications

Symbol	Parameter	Min	Typ	Max	Units
V_{OL}	eDP_DISP_UTIL Output Low Voltage	$0.1*V_{CC}$	—	—	V
V_{OH}	eDP_DISP_UTIL Output High Voltage	$0.9*V_{CC}$	—	—	V
R_{UP}	eDP_DISP_UTIL Internal pull-up	100	—	—	Ω
R_{DOWN}	eDP_DISP_UTIL Internal pull-down	100	—	—	Ω
Vaux(Tx)	Aux peak-to-peak voltage at transmitting device	0.39	—	1.38	V
Vaux(Rx)	Aux peak-to-peak voltage at receiving device	0.32	—	1.36	V
eDP_RCOMP	COMP Resistance	24.75	25	25.25	Ω

Note: 1. COMP resistance is to VCOMP_OUT.

Table 50. CMOS Signal Group DC Specifications

Symbol	Parameter	Min	Max	Units	Notes[1]
V_{IL}	Input Low Voltage	—	Vcc_{ST}* 0.3	V	2
V_{IH}	Input High Voltage	Vcc_{ST}* 0.7	—	V	2, 4
V_{OL}	Output Low Voltage	—	Vcc_{ST} * 0.1	V	2
V_{OH}	Output High Voltage	Vcc_{ST} * 0.9	—	V	2, 4
R_{ON}	Buffer on Resistance	23	73	Ω	—
I_{LI}	Input Leakage Current	—	±150	μA	3

Notes: 1. Unless otherwise noted, all specifications in this table apply to all processor frequencies.
2. The Vcc_{ST} referred to in these specifications refers to instantaneous VCCIO_OUT.
3. For VIN between "0" V and Vcc_{ST}. Measured when the driver is tri-stated.
4. V_{IH} and V_{OH} may experience excursions above Vcc_{ST}. However, input signal drivers must comply with the signal quality specifications.

Table 51. GTL Signal Group and Open Drain Signal Group DC Specifications

Symbol	Parameter	Min	Max	Units	Notes[1]
V_{IL}	Input Low Voltage (TAP, except PROC_TCK, PROC_TRST#)	—	Vcc_{ST} * 0.6	V	2
V_{IH}	Input High Voltage (TAP, except PROC_TCK, PROC_TRST#)	Vcc_{ST} * 0.72	—	V	2, 4

continued...

Symbol	Parameter	Min	Max	Units	Notes[1]
V_{IL}	Input Low Voltage (PROC_TCK, PROC_TRST#)	—	Vcc_{ST} * 0.3	V	2
V_{IH}	Input High Voltage (PROC_TCK, PROC_TRST#)	Vcc_{ST} * 0.7	—	V	2, 4
$V_{HYSTERESIS}$	Hysteresis Voltage	Vcc_{ST} * 0.2	—	V	—
R_{ON}	Buffer on Resistance (TDO)	7	17	Ω	—
V_{IL}	Input Low Voltage (other GTL)	—	Vcc_{ST} * 0.6	V	2
V_{IH}	Input High Voltage (other GTL)	Vcc_{ST} * 0.72	—	V	2, 4
R_{ON}	Buffer on Resistance (CFG/BPM)	16	24	Ω	—
R_{ON}	Buffer on Resistance (other GTL)	12	28	Ω	—
I_{LI}	Input Leakage Current	—	±150	µA	3

Notes: 1. Unless otherwise noted, all specifications in this table apply to all processor frequencies.
2. The Vcc_{ST} referred to in these specifications refers to instantaneous Vcc_{ST}.
3. For VIN between 0 V and Vcc_{ST}. Measured when the driver is tri-stated.
4. V_{IH} and V_{OH} may experience excursions above Vcc_{ST}. However, input signal drivers must comply with the signal quality specifications.

Table 52. VR Enable CMOS Signal Group DC Specification

Symbol	Parameter	Min	Max	Units	Notes
R_{ON}	Buffer on Resistance	30	70	Ω	
$V_{HYSTERESIS}$	Hysteresis Voltage	0.15* Vcc_{ST}	—	V	

Table 53. VCOMP_OUT and VCCIO_TERM

Symbol	Parameter	Typ	Max	Units	Notes
VCOMP_OUT	Termination Voltage	1.0	—	V	1
VCCIO_TERM	Termination Voltage	1.0	—	V	2

Notes: 1. VCOMP_OUT may only be used to connect eDP_RCOMP.
2. Internal processor power for signal termination.

7.8.1 Platform Environment Control Interface (PECI) DC Characteristics

The PECI interface operates at a nominal voltage set by Vcc_{ST}. The set of DC electrical specifications shown in the following table is used with devices normally operating from a Vcc_{ST} interface supply.

Vcc_{ST} nominal levels will vary between processor families. All PECI devices will operate at the Vcc_{ST} level determined by the processor installed in the system.

Table 54. Platform Environment Control Interface (PECI) DC Electrical Limits

Symbol	Definition and Conditions	Min	Max	Units	Notes[1]
R_{up}	Internal pull up resistance	15	45	Ω	3
V_{in}	Input Voltage Range	-0.15	Vcc_{ST}	V	—

continued...

Symbol	Definition and Conditions	Min	Max	Units	Notes[1]
$V_{hysteresis}$	Hysteresis	0.1 * Vcc_{ST}	N/A	V	—
V_n	Negative-Edge Threshold Voltage	0.275 * Vcc_{ST}	0.500 * Vcc_{ST}	V	—
V_p	Positive-Edge Threshold Voltage	0.550 * Vcc_{ST}	0.725 * Vcc_{ST}	V	—
C_{bus}	Bus Capacitance per Node	N/A	10	pF	—
C_{pad}	Pad Capacitance	0.7	1.8	pF	—
Ileak000	leakage current at 0 V	—	0.6	mA	—
Ileak025	leakage current at 0.25* Vcc_{ST}	—	0.4	mA	—
Ileak050	leakage current at 0.50* Vcc_{ST}	—	0.2	mA	—
Ileak075	leakage current at 0.75* Vcc_{ST}	—	0.13	mA	—
Ileak100	leakage current at Vcc_{ST}	—	0.10	mA	—

Notes: 1. Vcc_{ST} supplies the PECI interface. PECI behavior does not affect Vcc_{ST} minimum / maximum specifications.
2. The leakage specification applies to powered devices on the PECI bus.
3. The PECI buffer internal pull-up resistance measured at 0.75* Vcc_{ST}.

7.8.2 Input Device Hysteresis

The input buffers in both client and host models must use a Schmitt-triggered input design for improved noise immunity. Use the following figure as a guide for input buffer design.

Figure 13. Input Device Hysteresis

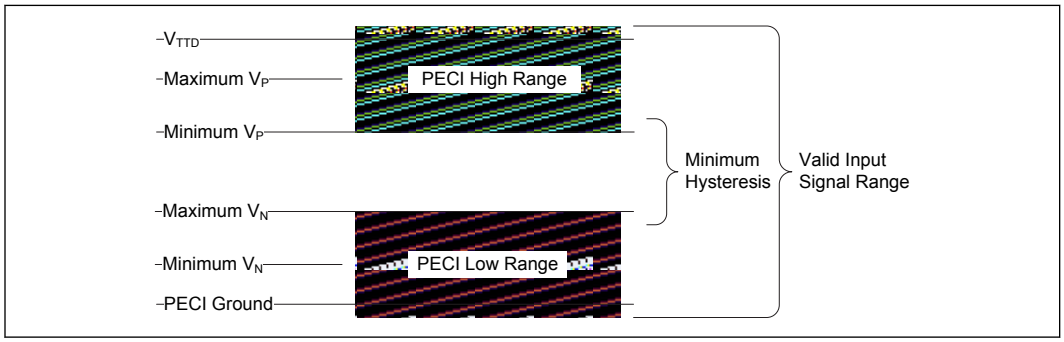

8.0 Package Specifications

8.1 Package Mechanical Attributes

The U-Processor Line and Y-Processor Line use a Flip Chip technology and Multi-Chip package (MCP) available in a Ball Grid Array (BGA) package. The following table provides an overview of the mechanical attributes of this package.

Table 55. Package Mechanical Attributes

	Parameter	U-Processor Line and Y-Processor Line
Package Technology	Package Type	Flip Chip Ball Grid Array
	Interconnect	Ball Grid Array (BGA)
	Lead Free	Yes
	Halogenated Flame Retardant Free	Yes
Package Configuration	Solder Ball Composition	SAC 405
	Ball/Pin Count	1168
	Grid Array Pattern	Balls Anywhere
	Land Side Capacitors	Yes
	Die Side Capacitors	No
	Die Configuration	Multi-Chip Package (MCP) / 2 dies
Package Dimensions	Nominal Package Size	40.0 mm x 24.0 mm
	Min Ball/Pin pitch	0.65 mm

8.2 Package Loading Specifications

Table 56. Package Loading Specifications

Maximum Static Normal Load	Limit	Notes
Y-Processor Line	22 N (15 lbf)	1, 2, 3
U-Processor Line/ Y-Processor Line BGA	67 N (15 lbf)	1, 2, 3

Notes:
1. The thermal solution attach mechanism must not induce continuous stress to the package. It may only apply a uniform load to the die to maintain a thermal interface.
2. This specification applies to the uniform compressive load in the direction perpendicular to the dies' top surface.
3. This specification is based on limited testing for design characterization.

8.3 Package Storage Specifications

Table 57. Package Storage Specifications

Parameter	Description	Min	Max	Notes
$T_{ABSOLUTE\ STORAGE}$	The non-operating device storage temperature. Damage (latent or otherwise) may occur when subjected to this temperature for any length of time.	-25 °C	125 °C	1, 2, 3
$T_{SUSTAINED\ STORAGE}$	The ambient storage temperature limit (in shipping media) for a sustained period of time.	-5 °C	40 °C	4, 5
$RH_{SUSTAINED\ STORAGE}$	The maximum device storage relative humidity for a sustained period of time.	60% @ 24 °C		5, 6
$TIME_{SUSTAINED\ STORAGE}$	A prolonged or extended period of time: typically associated with customer shelf life.	0 months	6 months	6

Notes:
1. Refers to a component device that is not assembled in a board or socket that is not to be electrically connected to a voltage reference or I/O signals.
2. Specified temperatures are based on data collected. Exceptions for surface mount reflow are specified by applicable JEDEC standards.
3. $T_{ABSOLUTE\ STORAGE}$ applies to the unassembled component only and does not apply to the shipping media, moisture barrier bags or desiccant.
4. Intel-branded board products are certified to meet the following temperature and humidity limits that are given as an example only (Non-Operating Temperature Limit: -40 °C to 70 °C, Humidity 50% to 90%, non-condensing with a maximum wet bulb of 28 °C). Post board attach storage temperature limits are not specified for non-Intel branded boards.
5. The JEDEC, J-JSTD-020 moisture level rating and associated handling practices apply to all moisture sensitive devices removed from the moisture barrier bag.
6. Nominal temperature and humidity conditions and durations are given and tested within the constraints imposed by $T_{SUSTAINED\ STORAGE}$ and customer shelf life in applicable Intel boxes and bags.

9.0 Processor Ball and Signal Information

This chapter provides the processor Ball information.

Table 58. Ball List by Signal Name for DDR3L Configuration

Signal Name	Ball #
ACPRESENT / GPIO31	AJ8
APWROK	AB5
BATLOW# / GPIO72	AN4
BMBUSY# / GPIO76	P1
BPM#0	J60
BPM#1	H60
BPM#2	H61
BPM#3	H62
BPM#4	K59
BPM#5	H63
BPM#6	K60
BPM#7	J61
CATERR#	K61
CFG[0]	AC60
CFG[1]	AC62
CFG[10]	V60
CFG[11]	U60
CFG[12]	T63
CFG[13]	T62
CFG[14]	T61
CFG[15]	T60
CFG[16]	AA62
CFG[17]	AA61
CFG[18]	U63
CFG[19]	U62
CFG[2]	AC63
CFG[3]	AA63
continued...	

Signal Name	Ball #
CFG[4]	AA60
CFG[5]	Y62
CFG[6]	Y61
CFG[7]	Y60
CFG[8]	V62
CFG[9]	V61
CFG_RCOMP	V63
CL_CLK	AF2
CL_DATA	AD2
CL_RST#	AF4
CLKOUT_ITPXDP_N	B35
CLKOUT_ITPXDP_P	A35
CLKOUT_LPC_0	AN15
CLKOUT_LPC_1	AP15
CLKOUT_PCIE_N0	C43
CLKOUT_PCIE_N1	B41
CLKOUT_PCIE_N2	C41
CLKOUT_PCIE_N3	B38
CLKOUT_PCIE_N4	A39
CLKOUT_PCIE_N5	B37
CLKOUT_PCIE_P0	C42
CLKOUT_PCIE_P1	A41
CLKOUT_PCIE_P2	B42
CLKOUT_PCIE_P3	C37
CLKOUT_PCIE_P4	B39
CLKOUT_PCIE_P5	A37
CLKRUN# / GPIO32	V5
continued...	

Signal Name	Ball #
DAISY_CHAIN_NCTF_A3	A3
DAISY_CHAIN_NCTF_A4	A4
DAISY_CHAIN_NCTF_A60	A60
DAISY_CHAIN_NCTF_A61	A61
DAISY_CHAIN_NCTF_A62	A62
DAISY_CHAIN_NCTF_AV1	AV1
DAISY_CHAIN_NCTF_AW1	AW1
DAISY_CHAIN_NCTF_AW2	AW2
DAISY_CHAIN_NCTF_AW3	AW3
DAISY_CHAIN_NCTF_AW61	AW61
DAISY_CHAIN_NCTF_AW62	AW62
DAISY_CHAIN_NCTF_AW63	AW63
DAISY_CHAIN_NCTF_AY2	AY2
DAISY_CHAIN_NCTF_AY3	AY3
DAISY_CHAIN_NCTF_AY60	AY60
DAISY_CHAIN_NCTF_AY61	AY61
DAISY_CHAIN_NCTF_AY62	AY62
DAISY_CHAIN_NCTF_B2	B2
continued...	

Signal Name	Ball #
DAISY_CHAIN_NCTF_B3	B3
DAISY_CHAIN_NCTF_B61	B61
DAISY_CHAIN_NCTF_B62	B62
DAISY_CHAIN_NCTF_B63	B63
DAISY_CHAIN_NCTF_C1	C1
DAISY_CHAIN_NCTF_C2	C2
DCPRTC	AE7
DCPSUS1	AD10
DCPSUS1	AD8
DCPSUS2	AH13
DCPSUS3	J13
DCPSUS4	AB8
DCPSUSBYP	AG19
DCPSUSBYP	AG20
DDI1_TXN[0]	C54
DDI1_TXN[1]	B58
DDI1_TXN[2]	B55
DDI1_TXN[3]	A57
DDI1_TXP[0]	C55
DDI1_TXP[1]	C58
DDI1_TXP[2]	A55
DDI1_TXP[3]	B57
DDI2_TXN[0]	C51
DDI2_TXN[1]	C53
DDI2_TXN[2]	C49
DDI2_TXN[3]	A53
DDI2_TXP[0]	C50
DDI2_TXP[1]	B54
DDI2_TXP[2]	B50
DDI2_TXP[3]	B53
DDPB_AUXN	C5
DDPB_AUXP	B5
DDPB_CTRLCLK	B9

continued...

Signal Name	Ball #
DDPB_CTRLDATA	C9
DDPB_HPD	C8
DDPC_AUXN	B6
DDPC_AUXP	A6
DDPC_CTRLCLK	D9
DDPC_CTRLDATA	D11
DDPC_HPD	A8
DEVSLP0 / GPIO33	P2
DEVSLP1 / GPIO38	L2
DEVSLP2 / GPIO39	N5
DIFFCLK_BIASREF	C26
DPWROK	AV5
DSWVRMEN	AW7
EDP_AUXN	A45
EDP_AUXP	B45
eDP_BKLCTL	B8
eDP_BKLEN	A9
EDP_DISP_UTIL	A43
EDP_HPD	D6
EDP_RCOMP	D20
EDP_TXN0	C45
EDP_TXN1	A47
EDP_TXN2	C47
EDP_TXN3	A49
EDP_TXP0	B46
EDP_TXP1	B47
EDP_TXP2	C46
EDP_TXP3	B49
eDP_VDDEN	C6
GPIO10	AM2
GPIO13	AT3
GPIO14	AH4
GPIO15	AD6
GPIO16	Y1
GPIO17	T3
GPIO24	AD5

continued...

Signal Name	Ball #
GPIO25	AM4
GPIO26	AN3
GPIO27	AN5
GPIO28	AD7
GPIO44	AK4
GPIO45	AG5
GPIO46	AG3
GPIO47	AB6
GPIO48	U4
GPIO49	Y3
GPIO50	P3
GPIO51	R5
GPIO52	L1
GPIO53	L4
GPIO54	L3
GPIO55	U7
GPIO56	AG6
GPIO57	AP1
GPIO58	AL4
GPIO59	AT5
GPIO8	AU2
GPIO9	AM3
GSPI_MOSI / GPIO90	K2
GSPI0_CLK / GPIO84	L6
GSPI0_CS# / GPIO83	R6
GSPI0_MISO / GPIO85	N6
GSPI0_MOSI / GPIO86	L8
GSPI1_CLK / GPIO88	L5
GSPI1_CS# / GPIO87	R7
GSPI1_MISO / GPIO89	N7
HDA_BCLK / I2S0_SCLK	AW8

continued...

Signal Name	Ball #
HDA_DOCK_EN# / I2S1_TXD	AW10
HDA_DOCK_RST# / I2S1_SFRM	AV10
HDA_RST# / I2S_MCLK	AU8
HDA_SDI0 / I2S0_RXD	AY10
HDA_SDI1 / I2S1_RXD	AU12
HDA_SDO / I2S0_TXD	AU11
HDA_SYNC / I2S0_SFRM	AV11
HSIOPC / GPIO71	Y2
I2C0_SCL / GPIO5	F3
I2C0_SDA / GPIO4	F2
I2C1_SCL / GPIO7	F1
I2C1_SDA / GPIO6	G4
I2S1_SCLK	AY8
INTRUDER#	AU6
INTVRMEN	AV7
JTAGX	AE63
LAD0	AU14
LAD1	AW12
LAD2	AY12
LAD3	AW11
LAN_PHY_PWR_CTRL / GPIO12	AM7
LFRAME#	AV12
OC0# / GPIO40	AL3
OC1# / GPIO41	AT1
OC2# / GPIO42	AH2
OC3# / GPIO43	AV3
PCH_OPI_RCOMP	AW15
PCH_PWROK	AY7
PCH_TCK	AE62
PCH_TDI	AD61
PCH_TDO	AE61
PCH_TMS	AD62

continued...

Signal Name	Ball #
PCH_TRST#	AU62
PCIE_IREF	B27
PCIE_RCOMP	A27
PCIECLKRQ0# / GPIO18	U2
PCIECLKRQ1# / GPIO19	Y5
PCIECLKRQ2# / GPIO20	AD1
PCIECLKRQ3# / GPIO21	N1
PCIECLKRQ4# / GPIO22	U5
PCIECLKRQ5# / GPIO23	T2
PECI	N62
PERn1 / USB3Rn3	G17
PERn2 / USB3Rn4	F15
PERn3	G11
PERn4	F13
PERn5_L0	F10
PERn5_L1	F8
PERn5_L2	H10
PERn5_L3	E6
PERp1 / USB3Rp3	F17
PERp2 / USB3Rp4	G15
PERp3	F11
PERp4	G13
PERp5_L0	E10
PERp5_L1	E8
PERp5_L2	G10
PERp5_L3	F6
PETn1 / USB3Tn3	C30
PETn2 / USB3Tn4	B31
PETn3	C29
PETn4	B29
PETn5_L0	C23
PETn5_L1	B23
PETn5_L2	B21

continued...

Signal Name	Ball #
PETn5_L3	B22
PETp1 / USB3Tp3	C31
PETp2 / USB3Tp4	A31
PETp3	B30
PETp4	A29
PETp5_L0	C22
PETp5_L1	A23
PETp5_L2	C21
PETp5_L3	A21
PIRQA# / GPIO77	U6
PIRQB# / GPIO78	P4
PIRQC# / GPIO79	N4
PIRQD# / GPIO80	N2
PLTRST#	AG7
PME#	AD4
PRDY#	J62
PREQ#	K62
PROC_DETECT#	D61
PROC_OPI_RCOMP	AY15
PROC_TCK	E60
PROC_TDI	F63
PROC_TDO	F62
PROC_TMS	E61
PROC_TRST#	E59
PROCHOT#	K63
PROCPWRGD	C61
PWR_DEBUG#	H59
PWRBTN#	AL7
RCIN# / GPIO82	V4
RSMRST#	AW6
RSVD	W23
RSVD	Y22
RSVD	B43
RSVD	T59
RSVD	AD60
RSVD	AD59

continued...

Signal Name	Ball #
RSVD	AA59
RSVD	AE60
RSVD	AC59
RSVD	AG58
RSVD	V59
RSVD	U59
RSVD	AL1
RSVD	AP7
RSVD	AM11
RSVD	AV62
RSVD	D58
RSVD	P20
RSVD	R20
RSVD	N60
RSVD	AV2
RSVD	AF20
RSVD	AB21
RSVD	AY14
RSVD	AW14
RSVD	E15
RSVD	E13
RSVD	AL11
RSVD	AC4
RSVD	A5
RSVD	N23
RSVD	T23
RSVD	U10
RSVD	R23
RSVD	L11
RSVD	K10
RSVD	F22
RSVD	H22
RSVD	J21
RSVD	AT2
RSVD	AU44
RSVD	AV44
	continued...

Signal Name	Ball #
RSVD	D15
RSVD	AU10
RSVD	AU15
RSVD	E1
RSVD	D1
RSVD	J20
RSVD	H18
RSVD	AN10
RSVD	AM10
RSVD	L59
RSVD	J58
RSVD	Y20
RSVD	AC20
RSVD	V21
RSVD	N58
RSVD	AC58
RSVD	AB23
RSVD	AD23
RSVD	AA23
RSVD	AE59
RSVD	K18
RSVD	M20
RSVD	K21
RSVD	M21
RSVD_TP	AV63
RSVD_TP	AU63
RSVD_TP	C63
RSVD_TP	C62
RSVD_TP	A51
RSVD_TP	B51
RSVD_TP	P60
RSVD_TP	P61
IVR_ERROR	N59
IST_TRIGGER	N61
RSVD_TP	L60
RTCRST#	AU7
	continued...

Signal Name	Ball #
RTCX1	AW5
RTCX2	AY5
SA_BA0	AU35
SA_BA1	AV35
SA_BA2	AY41
SA_CAS#	AU34
SA_CKE0	AU43
SA_CKE1	AW43
SA_CKE2	AY42
SA_CKE3	AY43
SA_CLK#0	AU37
SA_CLK#1	AW36
SA_CLK0	AV37
SA_CLK1	AY36
SA_CS#0	AP33
SA_CS#1	AR32
SA_DQ0	AH63
SA_DQ1	AH62
SA_DQ10	AP63
SA_DQ11	AP62
SA_DQ12	AM61
SA_DQ13	AM60
SA_DQ14	AP61
SA_DQ15	AP60
SA_DQ32	AY58
SA_DQ33	AW58
SA_DQ34	AY56
SA_DQ35	AW56
SA_DQ2	AK63
SA_DQ36	AV58
SA_DQ37	AU58
SA_DQ38	AV56
SA_DQ39	AU56
SA_DQ40	AY54
SA_DQ41	AW54
SA_DQ42	AY52
	continued...

Signal Name	Ball #
SA_DQ43	AW52
SA_DQ44	AV54
SA_DQ45	AU54
SA_DQ3	AK62
SA_DQ46	AV52
SA_DQ47	AU52
SB_DQ0	AY31
SB_DQ1	AW31
SB_DQ2	AY29
SB_DQ3	AW29
SB_DQ4	AV31
SB_DQ5	AU31
SB_DQ6	AV29
SB_DQ7	AU29
SA_DQ4	AH61
SB_DQ8	AY27
SB_DQ9	AW27
SB_DQ10	AY25
SB_DQ11	AW25
SB_DQ12	AV27
SB_DQ13	AU27
SB_DQ14	AV25
SB_DQ15	AU25
SB_DQ32	AY23
SB_DQ33	AW23
SA_DQ5	AH60
SB_DQ34	AY21
SB_DQ35	AW21
SB_DQ36	AV23
SB_DQ37	AU23
SB_DQ38	AV21
SB_DQ39	AU21
SB_DQ40	AY19
SB_DQ41	AW19
SB_DQ42	AY17
SB_DQ43	AW17

continued...

Signal Name	Ball #
SA_DQ6	AK61
SB_DQ44	AV19
SB_DQ45	AU19
SB_DQ46	AV17
SB_DQ47	AU17
SA_DQ7	AK60
SA_DQ8	AM63
SA_DQ9	AM62
SA_DQSN0	AJ61
SA_DQSN1	AN62
SA_DQSN4	AV57
SA_DQSN5	AV53
SB_DQSN0	AW30
SB_DQSN1	AV26
SB_DQSN4	AW22
SB_DQSN5	AV18
SA_DQSP0	AJ62
SA_DQSP1	AN61
SA_DQSP4	AW57
SA_DQSP5	AW53
SB_DQSP0	AV30
SB_DQSP1	AW26
SB_DQSP4	AV22
SB_DQSP5	AW18
SA_MA0	AU36
SA_MA1	AY37
SA_MA10	AP35
SA_MA11	AW41
SA_MA12	AU41
SA_MA13	AR35
SA_MA14	AV42
SA_MA15	AU42
SA_MA2	AR38
SA_MA3	AP36
SA_MA4	AU39
SA_MA5	AR36

continued...

Signal Name	Ball #
SA_MA6	AV40
SA_MA7	AW39
SA_MA8	AY39
SA_MA9	AU40
SA_ODT0	AP32
SA_RAS#	AY34
SA_WE#	AW34
SATA_IREF	A12
SATA_RCOMP	C12
SATA_Rn0 / PERn6_L3	J5
SATA_Rn1 / PERn6_L2	J8
SATA_Rn2 / PERn6_L1	J6
SATA_Rn3 / PERn6_L0	F5
SATA_Rp0 / PERp6_L3	H5
SATA_Rp1 / PERp6_L2	H8
SATA_Rp2 / PERp6_L1	H6
SATA_Rp3 / PERp6_L0	E5
SATA_Tn0 / PETn6_L3	B15
SATA_Tn1 / PETn6_L2	A17
SATA_Tn2 / PETn6_L1	B14
SATA_Tn3 / PETn6_L0	C17
SATA_Tp0 / PETp6_L3	A15
SATA_Tp1 / PETp6_L2	B17
SATA_Tp2 / PETp6_L1	C15
SATA_Tp3 / PETp6_L0	D17
SATA0GP / GPIO34	V1
SATA1GP / GPIO35	U1

continued...

Signal Name	Ball #
SATA2GP / GPIO36	V6
SATA3GP / GPIO37	AC1
SATALED#	U3
SB_BA0	AL35
SB_BA1	AM36
SB_BA2	AU49
SB_CAS#	AM33
SB_CK#0	AM38
SB_CK#1	AK38
SB_CK0	AN38
SB_CK1	AL38
SB_CKE0	AY49
SB_CKE1	AU50
SB_CKE2	AW49
SB_CKE3	AV50
SB_CS#0	AM32
SB_CS#1	AK32
SA_DQ16	AP58
SA_DQ17	AR58
SA_DQ26	AM54
SA_DQ27	AK54
SA_DQ28	AL55
SA_DQ29	AK55
SA_DQ30	AR54
SA_DQ31	AN54
SA_DQ48	AK40
SA_DQ49	AK42
SA_DQ50	AM43
SA_DQ51	AM45
SA_DQ18	AM57
SA_DQ52	AK45
SA_DQ53	AK43
SA_DQ54	AM40
SA_DQ55	AM42
SA_DQ56	AM46
SA_DQ57	AK46
	continued...

Signal Name	Ball #
SA_DQ58	AM49
SA_DQ59	AK49
SA_DQ60	AM48
SA_DQ61	AK48
SA_DQ19	AK57
SA_DQ62	AM51
SA_DQ63	AK51
SB_DQ16	AM29
SB_DQ17	AK29
SB_DQ18	AL28
SB_DQ19	AK28
SB_DQ20	AR29
SB_DQ21	AN29
SB_DQ22	AR28
SB_DQ23	AP28
SA_DQ20	AL58
SB_DQ24	AN26
SB_DQ25	AR26
SB_DQ26	AR25
SB_DQ27	AP25
SB_DQ28	AK26
SB_DQ29	AM26
SB_DQ30	AK25
SB_DQ31	AL25
SB_DQ48	AR21
SB_DQ49	AR22
SA_DQ21	AK58
SB_DQ50	AL21
SB_DQ51	AM22
SB_DQ52	AN22
SB_DQ53	AP21
SB_DQ54	AK21
SB_DQ55	AK22
SB_DQ56	AN20
SB_DQ57	AR20
SB_DQ58	AK18
	continued...

Signal Name	Ball #
SB_DQ59	AL18
SA_DQ22	AR57
SB_DQ60	AK20
SB_DQ61	AM20
SB_DQ62	AR18
SB_DQ63	AP18
SA_DQ23	AN57
SA_DQ24	AP55
SA_DQ25	AR55
SA_DQSN2	AM58
SA_DQSN3	AM55
SA_DQSN6	AL43
SA_DQSN7	AL48
SB_DQSN2	AN28
SB_DQSN3	AN25
SB_DQSN6	AN21
SB_DQSN7	AN18
SA_DQSP2	AN58
SA_DQSP3	AN55
SA_DQSP6	AL42
SA_DQSP7	AL49
SB_DQSP2	AM28
SB_DQSP3	AM25
SB_DQSP6	AM21
SB_DQSP7	AM18
SB_MA0	AP40
SB_MA1	AR40
SB_MA10	AK36
SB_MA11	AV47
SB_MA12	AU47
SB_MA13	AK33
SB_MA14	AR46
SB_MA15	AP46
SB_MA2	AP42
SB_MA3	AR42
SB_MA4	AR45
	continued...

Signal Name	Ball #
SB_MA5	AP45
SB_MA6	AW46
SB_MA7	AY46
SB_MA8	AY47
SB_MA9	AU46
SB_ODT0	AL32
SB_RAS#	AM35
SB_WE#	AK35
SDIO_CLK / GPIO64	E3
SDIO_CMD / GPIO65	F4
SDIO_D0 / GPIO66	D3
SDIO_D1 / GPIO67	E4
SDIO_D2 / GPIO68	C3
SDIO_D3 / GPIO69	E2
SDIO_POWER_EN / GPIO70	C4
SERIRQ	T4
SLP_A#	AL5
SLP_LAN#	AJ7
SLP_S0#	AF3
SLP_S3#	AT4
SLP_S4#	AJ6
SLP_S5# / GPIO63	AP5
SLP_SUS#	AP4
SLP_WLAN# / GPIO29	AM5
SM_DRAMRST#	AV15
SM_PG_CNTL1	AV61
SM_RCOMP0	AU60
SM_RCOMP1	AV60
SM_RCOMP2	AU61
SM_VREF_CA	AP49
SM_VREF_DQ0	AR51
SM_VREF_DQ1	AP51
SMBALERT# / GPIO11	AN2

continued...

Signal Name	Ball #
SMBCLK	AP2
SMBDATA	AH1
SML0ALERT# / GPIO60	AL2
SML0CLK	AN1
SML0DATA	AK1
SML1ALERT# / PCHHOT# / GPIO73	AU4
SML1CLK / GPIO75	AU3
SML1DATA / GPIO74	AH3
SPI_CLK	AA3
SPI_CS0#	Y7
SPI_CS1#	Y4
SPI_CS2#	AC2
SPI_IO2	Y6
SPI_IO3	AF1
SPI_MISO	AA4
SPI_MOSI	AA2
SPKR / GPIO81	V2
SRTCRST#	AV6
SUS_STAT# / GPIO61	AG4
SUSACK#	AK2
SUSCLK / GPIO62	AE6
SUSWARN# / SUSPWRDNACK / GPIO30	AV4
SYS_PWROK	AG2
SYS_RESET#	AC3
TD_IREF	B12
TESTLOW_AK8	AK8
TESTLOW_AL8	AL8
TESTLOW_C34	C34
TESTLOW_C35	C35
THERMTRIP#	D60
UART0_CTS# / GPIO94	G1

continued...

Signal Name	Ball #
UART0_RTS# / GPIO93	J2
UART0_RXD / GPIO91	J1
UART0_TXD / GPIO92	K3
UART1_CTS# / GPIO3	J4
UART1_RST# / GPIO2	J3
UART1_RXD / GPIO0	K4
UART1_TXD / GPIO1	G2
USB2n0	AN8
USB2n1	AR7
USB2n2	AR8
USB2n3	AR10
USB2n4	AM15
USB2n5	AM13
USB2n6	AP11
USB2n7	AR13
USB2p0	AM8
USB2p1	AT7
USB2p2	AP8
USB2p3	AT10
USB2p4	AL15
USB2p5	AN13
USB2p6	AN11
USB2p7	AP13
USB3Rn1	G20
USB3Rn2	E18
USB3Rp1	H20
USB3Rp2	F18
USB3Tn1	C33
USB3Tn2	B33
USB3Tp1	B34
USB3Tp2	A33
USBRBIAS	AJ11

continued...

Signal Name	Ball #
USBRBIAS#	AJ10
VCC	F59
VCC	AB57
VCC	AD57
VCC	AG57
VCC	C24
VCC	C28
VCC	C32
VCC	C36
VCC	C40
VCC	C44
VCC	C48
VCC	C52
VCC	C56
VCC	E23
VCC	E25
VCC	E27
VCC	E29
VCC	E31
VCC	E33
VCC	E35
VCC	E37
VCC	E39
VCC	E41
VCC	E43
VCC	E45
VCC	E47
VCC	E49
VCC	E51
VCC	E53
VCC	E55
VCC	E57
VCC	F24
VCC	F28
VCC	F32
VCC	F36

continued...

Signal Name	Ball #
VCC	F40
VCC	F44
VCC	F48
VCC	F52
VCC	F56
VCC	G23
VCC	G25
VCC	G27
VCC	G29
VCC	G31
VCC	G33
VCC	G35
VCC	G37
VCC	G39
VCC	G41
VCC	G43
VCC	G45
VCC	G47
VCC	G49
VCC	G51
VCC	G53
VCC	G55
VCC	G57
VCC	H23
VCC	J23
VCC	K23
VCC	K57
VCC	L22
VCC	M23
VCC	M57
VCC	P57
VCC	U57
VCC	W57
VCC_SENSE	E63
VCC1_05	P9
VCC1_05	N8

continued...

Signal Name	Ball #
VCC1_05	AE8
VCC1_05	AF22
VCC1_05	H11
VCC1_05	H15
VCC1_05	J11
VCC1_05	AG16
VCC1_05	AG17
VCC3_3	V8
VCC3_3	W9
VCC3_3	K14
VCC3_3	K16
VCCACLKPLL	A20
VCCAPLL	AA21
VCCAPLL	W21
VCCASW	AE9
VCCASW	AF9
VCCASW	AG8
VCCASW	AG13
VCCASW	AG14
VCCCLK	J18
VCCCLK	K19
VCCCLK	J17
VCCCLK	T21
VCCCLK	R21
VCCDSW3_3	AH10
VCCHDA	AH14
VCCHSIO	M9
VCCHSIO	K9
VCCHSIO	L10
VCCIO_OUT	A59
VCOMP_OUT	E20
VCCRTC	AG10
VCCSATA3PLL	B11
VCCSDIO	U8
VCCSDIO	T9
VCCSPI	Y8

continued...

Signal Name	Ball #
VCCST	AC22
VCCST	AE22
VCCST	AE23
VCCST_PWRGD	B59
VCCSUS3_3	AH11
VCCSUS3_3	AA9
VCCSUS3_3	AC9
VCCSUS3_3	AE20
VCCSUS3_3	AE21
VCCTS1_5	J15
VCCUSB3PLL	B18
VDDQ	AH26
VDDQ	AJ31
VDDQ	AJ33
VDDQ	AJ37
VDDQ	AN33
VDDQ	AP43
VDDQ	AR48
VDDQ	AY35
VDDQ	AY40
VDDQ	AY44
VDDQ	AY50
VIDALERT#	L62
VIDSCLK	N63
VIDSOUT	L63
VR_EN	F60
VR_READY	C59
VSS	P62
VSS	D63
VSS	P22
VSS	N21
VSS	A11
VSS	A14
VSS	A18
VSS	A24
VSS	A28
	continued...

Signal Name	Ball #
VSS	A32
VSS	A36
VSS	A40
VSS	A48
VSS	A52
VSS	A56
VSS	AA1
VSS	A44
VSS	AA58
VSS	AB10
VSS	AB20
VSS	AE5
VSS	AB22
VSS	AB7
VSS	AC61
VSS	AD3
VSS	AD63
VSS	AE10
VSS	AD21
VSS	AE58
VSS	AR43
VSS	C39
VSS	AF11
VSS	AF12
VSS	AF14
VSS	AF15
VSS	AF17
VSS	AF18
VSS	AG21
VSS	AG23
VSS	AG1
VSS	AG11
VSS	AG60
VSS	AG61
VSS	AG62
VSS	AG63
	continued...

Signal Name	Ball #
VSS	AH17
VSS	AH19
VSS	AH20
VSS	AH22
VSS	AH24
VSS	AH28
VSS	AH30
VSS	AH32
VSS	AH34
VSS	AH36
VSS	AH38
VSS	AH40
VSS	AH42
VSS	AH44
VSS	AH49
VSS	AH51
VSS	AH53
VSS	AH55
VSS	AH57
VSS	AJ13
VSS	AJ14
VSS	AJ23
VSS	AJ25
VSS	AJ27
VSS	AJ29
VSS	AJ35
VSS	AJ39
VSS	AJ41
VSS	AJ43
VSS	AJ45
VSS	AJ47
VSS	AJ50
VSS	AJ52
VSS	AJ54
VSS	AJ56
VSS	AJ58
	continued...

Signal Name	Ball #
VSS	AJ60
VSS	AJ63
VSS	AK23
VSS	AK3
VSS	AK52
VSS	AL10
VSS	AL13
VSS	AL17
VSS	AL20
VSS	AL22
VSS	AL23
VSS	AL26
VSS	AL29
VSS	AL31
VSS	AL33
VSS	AL36
VSS	AL39
VSS	AL40
VSS	AL45
VSS	AL46
VSS	AL51
VSS	AL52
VSS	AL54
VSS	AL57
VSS	AL60
VSS	AL61
VSS	AM1
VSS	AM17
VSS	AM23
VSS	AM31
VSS	AM52
VSS	AN17
VSS	AN23
VSS	AN31
VSS	AN32
VSS	AN35
	continued...

Signal Name	Ball #
VSS	AN36
VSS	AN39
VSS	AN40
VSS	AN42
VSS	AN43
VSS	AN45
VSS	AN46
VSS	AN48
VSS	AN49
VSS	AN51
VSS	AN52
VSS	AN60
VSS	AN63
VSS	AN7
VSS	AP10
VSS	AP17
VSS	AP20
VSS	AP22
VSS	AP23
VSS	AP26
VSS	AP29
VSS	AP3
VSS	AP31
VSS	AP38
VSS	AP39
VSS	AP52
VSS	AP54
VSS	AP57
VSS	AR11
VSS	AR15
VSS	AR17
VSS	AR23
VSS	AR31
VSS	AR33
VSS	AR39
VSS	AP48
	continued...

Signal Name	Ball #
VSS	AR49
VSS	AR5
VSS	AR52
VSS	AT13
VSS	AT35
VSS	AT37
VSS	AT40
VSS	AT42
VSS	AT43
VSS	AT46
VSS	AT49
VSS	AT61
VSS	AT62
VSS	AT63
VSS	AU1
VSS	AU16
VSS	AU18
VSS	AU20
VSS	AU22
VSS	AU24
VSS	AU26
VSS	AU28
VSS	AU30
VSS	AU33
VSS	AU51
VSS	AU53
VSS	AU55
VSS	AU57
VSS	AU59
VSS	AV14
VSS	D62
VSS	AV16
VSS	AV20
VSS	AV24
VSS	AV28
VSS	AV33
	continued...

Signal Name	Ball #
VSS	AV34
VSS	AV36
VSS	AV39
VSS	AV41
VSS	AV43
VSS	AV46
VSS	AV49
VSS	AV51
VSS	AV55
VSS	AV59
VSS	AV8
VSS	AW16
VSS	AW24
VSS	AW33
VSS	AW35
VSS	AW37
VSS	AW4
VSS	AW40
VSS	AW42
VSS	AW44
VSS	AW47
VSS	AW50
VSS	AW51
VSS	AW59
VSS	AW60
VSS	AY11
VSS	AY16
VSS	AY18
VSS	AY22
VSS	AY24
VSS	AY26
VSS	AY30
VSS	AY33
VSS	AY51
VSS	AY53
VSS	AY57
	continued...

Signal Name	Ball #
VSS	AY59
VSS	AY6
VSS	AY4
VSS	B20
VSS	B24
VSS	B26
VSS	B28
VSS	B32
VSS	C38
VSS	B36
VSS	B4
VSS	B40
VSS	B44
VSS	C14
VSS	B48
VSS	B52
VSS	B56
VSS	B60
VSS	C11
VSS	C18
VSS	C20
VSS	C25
VSS	C27
VSS	D12
VSS	D14
VSS	D18
VSS	D21
VSS	D23
VSS	D25
VSS	D26
VSS	D27
VSS	D29
VSS	D2
VSS	D30
VSS	D31
VSS	D33
	continued...

Signal Name	Ball #
VSS	D34
VSS	D35
VSS	D37
VSS	D38
VSS	D39
VSS	D41
VSS	D42
VSS	D43
VSS	D45
VSS	D46
VSS	D47
VSS	D49
VSS	D50
VSS	D51
VSS	D53
VSS	D54
VSS	D55
VSS	D57
VSS	D59
VSS	E11
VSS	E17
VSS	F42
VSS	F20
VSS	D5
VSS	F26
VSS	F30
VSS	F34
VSS	F38
VSS	G6
VSS	F46
VSS	F50
VSS	F54
VSS	F58
VSS	F61
VSS	G18
VSS	G22
	continued...

Signal Name	Ball #
VSS	G3
VSS	G5
VSS	G8
VSS	H13
VSS	H17
VSS	H57
VSS	J10
VSS	J22
VSS	J59
VSS	J63
VSS	K1
VSS	K12
VSS	R22
VSS	L13
VSS	L15
VSS	L17
VSS	L18
VSS	L20
VSS	L58
VSS	L61
VSS	L7
VSS	M22
VSS	N10
VSS	N3
VSS	C57
VSS	P59
VSS	P63
VSS	R10
VSS	R8
VSS	T1
VSS	T58
VSS	D8
VSS	U20
VSS	U22
VSS	U61
VSS	V10

continued...

Signal Name	Ball #
VSS	V3
VSS	V7
VSS	W20
VSS	Y10
VSS	U9
VSS	Y59
VSS	Y63
VSS	W22
VSS	V58
VSS	AH46
VSS	V23
VSS	AH16
VSS_SENSE	E62
WAKE#	AJ5
XTAL24_IN	A25
XTAL24_OUT	B25

Table 59. Ball List by Signal Name for LPDDR3 Configuration

Signal Name	Ball #
ACPRESENT / GPIO31	AJ8
APWROK	AB5
BATLOW# / GPIO72	AN4
BMBUSY# / GPIO76	P1
BPM#0	J60
BPM#1	H60
BPM#2	H61
BPM#3	H62
BPM#4	K59
BPM#5	H63
BPM#6	K60
BPM#7	J61
CATERR#	K61
CFG[0]	AC60
CFG[1]	AC62
CFG[10]	V60
CFG[11]	U60
CFG[12]	T63
CFG[13]	T62
CFG[14]	T61
CFG[15]	T60
CFG[16]	AA62
CFG[17]	AA61
CFG[18]	U63
CFG[19]	U62
CFG[2]	AC63
CFG[3]	AA63
CFG[4]	AA60
CFG[5]	Y62
CFG[6]	Y61
CFG[7]	Y60
CFG[8]	V62
CFG[9]	V61

continued...

Signal Name	Ball #
CFG_RCOMP	V63
CL_CLK	AF2
CL_DATA	AD2
CL_RST#	AF4
CLKOUT_ITPXDP_N	B35
CLKOUT_ITPXDP_P	A35
CLKOUT_LPC_0	AN15
CLKOUT_LPC_1	AP15
CLKOUT_PCIE_N0	C43
CLKOUT_PCIE_N1	B41
CLKOUT_PCIE_N2	C41
CLKOUT_PCIE_N3	B38
CLKOUT_PCIE_N4	A39
CLKOUT_PCIE_N5	B37
CLKOUT_PCIE_P0	C42
CLKOUT_PCIE_P1	A41
CLKOUT_PCIE_P2	B42
CLKOUT_PCIE_P3	C37
CLKOUT_PCIE_P4	B39
CLKOUT_PCIE_P5	A37
CLKRUN# / GPIO32	V5
DAISY_CHAIN_NCTF_A3	A3
DAISY_CHAIN_NCTF_A4	A4
DAISY_CHAIN_NCTF_A60	A60
DAISY_CHAIN_NCTF_A61	A61
DAISY_CHAIN_NCTF_A62	A62
DAISY_CHAIN_NCTF_AV1	AV1
DAISY_CHAIN_NCTF_AW1	AW1
DAISY_CHAIN_NCTF_AW2	AW2
DAISY_CHAIN_NCTF_AW3	AW3

continued...

Signal Name	Ball #
DAISY_CHAIN_NCTF_AW61	AW61
DAISY_CHAIN_NCTF_AW62	AW62
DAISY_CHAIN_NCTF_AW63	AW63
DAISY_CHAIN_NCTF_AY2	AY2
DAISY_CHAIN_NCTF_AY3	AY3
DAISY_CHAIN_NCTF_AY60	AY60
DAISY_CHAIN_NCTF_AY61	AY61
DAISY_CHAIN_NCTF_AY62	AY62
DAISY_CHAIN_NCTF_B2	B2
DAISY_CHAIN_NCTF_B3	B3
DAISY_CHAIN_NCTF_B61	B61
DAISY_CHAIN_NCTF_B62	B62
DAISY_CHAIN_NCTF_B63	B63
DAISY_CHAIN_NCTF_C1	C1
DAISY_CHAIN_NCTF_C2	C2
DCPRTC	AE7
DCPSUS1	AD10
DCPSUS1	AD8
DCPSUS2	AH13
DCPSUS3	J13
DCPSUS4	AB8
DCPSUSBYP	AG19
DCPSUSBYP	AG20
DDI1_TXN[0]	C54
DDI1_TXN[1]	B58
DDI1_TXN[2]	B55
DDI1_TXN[3]	A57

continued...

Signal Name	Ball #
DDI1_TXP[0]	C55
DDI1_TXP[1]	C58
DDI1_TXP[2]	A55
DDI1_TXP[3]	B57
DDI2_TXN[0]	C51
DDI2_TXN[1]	C53
DDI2_TXN[2]	C49
DDI2_TXN[3]	A53
DDI2_TXP[0]	C50
DDI2_TXP[1]	B54
DDI2_TXP[2]	B50
DDI2_TXP[3]	B53
DDPB_AUXN	C5
DDPB_AUXP	B5
DDPB_CTRLCLK	B9
DDPB_CTRLDATA	C9
DDPB_HPD	C8
DDPC_AUXN	B6
DDPC_AUXP	A6
DDPC_CTRLCLK	D9
DDPC_CTRLDATA	D11
DDPC_HPD	A8
DEVSLP0 / GPIO33	P2
DEVSLP1 / GPIO38	L2
DEVSLP2 / GPIO39	N5
DIFFCLK_BIASREF	C26
DPWROK	AV5
DSWVRMEN	AW7
EDP_AUXN	A45
EDP_AUXP	B45
eDP_BKLCTL	B8
eDP_BKLEN	A9
EDP_DISP_UTIL	A43
EDP_HPD	D6
EDP_RCOMP	D20
EDP_TXN0	C45

continued...

Signal Name	Ball #
EDP_TXN1	A47
EDP_TXN2	C47
EDP_TXN3	A49
EDP_TXP0	B46
EDP_TXP1	B47
EDP_TXP2	C46
EDP_TXP3	B49
eDP_VDDEN	C6
GPIO10	AM2
GPIO13	AT3
GPIO14	AH4
GPIO15	AD6
GPIO16	Y1
GPIO17	T3
GPIO24	AD5
GPIO25	AM4
GPIO26	AN3
GPIO27	AN5
GPIO28	AD7
GPIO44	AK4
GPIO45	AG5
GPIO46	AG3
GPIO47	AB6
GPIO48	U4
GPIO49	Y3
GPIO50	P3
GPIO51	R5
GPIO52	L1
GPIO53	L4
GPIO54	L3
GPIO55	U7
GPIO56	AG6
GPIO57	AP1
GPIO58	AL4
GPIO59	AT5
GPIO8	AU2

continued...

Signal Name	Ball #
GPIO9	AM3
GSPI_MOSI / GPIO90	K2
GSPI0_CLK / GPIO84	L6
GSPI0_CS# / GPIO83	R6
GSPI0_MISO / GPIO85	N6
GSPI0_MOSI / GPIO86	L8
GSPI1_CLK / GPIO88	L5
GSPI1_CS# / GPIO87	R7
GSPI1_MISO / GPIO89	N7
HDA_BCLK / I2S0_SCLK	AW8
HDA_DOCK_EN# / I2S1_TXD	AW10
HDA_DOCK_RST# / I2S1_SFRM	AV10
HDA_RST# / I2S_MCLK	AU8
HDA_SDI0 / I2S0_RXD	AY10
HDA_SDI1 / I2S1_RXD	AU12
HDA_SDO / I2S0_TXD	AU11
HDA_SYNC / I2S0_SFRM	AV11
HSIOPC / GPIO71	Y2
I2C0_SCL / GPIO5	F3
I2C0_SDA / GPIO4	F2
I2C1_SCL / GPIO7	F1
I2C1_SDA / GPIO6	G4
I2S1_SCLK	AY8
INTRUDER#	AU6
INTVRMEN	AV7
JTAGX	AE63
LAD0	AU14

continued...

Signal Name	Ball #
LAD1	AW12
LAD2	AY12
LAD3	AW11
LAN_PHY_PWR_CTRL / GPIO12	AM7
LFRAME#	AV12
OC0# / GPIO40	AL3
OC1# / GPIO41	AT1
OC2# / GPIO42	AH2
OC3# / GPIO43	AV3
PCH_OPI_RCOMP	AW15
PCH_PWROK	AY7
PCH_TCK	AE62
PCH_TDI	AD61
PCH_TDO	AE61
PCH_TMS	AD62
PCH_TRST#	AU62
PCIE_IREF	B27
PCIE_RCOMP	A27
PCIECLKRQ0# / GPIO18	U2
PCIECLKRQ1# / GPIO19	Y5
PCIECLKRQ2# / GPIO20	AD1
PCIECLKRQ3# / GPIO21	N1
PCIECLKRQ4# / GPIO22	U5
PCIECLKRQ5# / GPIO23	T2
PECI	N62
PERn1 / USB3Rn3	G17
PERn2 / USB3Rn4	F15
PERn3	G11
PERn4	F13
PERn5_L0	F10
PERn5_L1	F8
PERn5_L2	H10

continued...

Signal Name	Ball #
PERn5_L3	E6
PERp1 / USB3Rp3	F17
PERp2 / USB3Rp4	G15
PERp3	F11
PERp4	G13
PERp5_L0	E10
PERp5_L1	E8
PERp5_L2	G10
PERp5_L3	F6
PETn1 / USB3Tn3	C30
PETn2 / USB3Tn4	B31
PETn3	C29
PETn4	B29
PETn5_L0	C23
PETn5_L1	B23
PETn5_L2	B21
PETn5_L3	B22
PETp1 / USB3Tp3	C31
PETp2 / USB3Tp4	A31
PETp3	B30
PETp4	A29
PETp5_L0	C22
PETp5_L1	A23
PETp5_L2	C21
PETp5_L3	A21
PIRQA# / GPIO77	U6
PIRQB# / GPIO78	P4
PIRQC# / GPIO79	N4
PIRQD# / GPIO80	N2
PLTRST#	AG7
PME#	AD4
PRDY#	J62
PREQ#	K62
PROC_DETECT#	D61
PROC_OPI_RCOMP	AY15
PROC_TCK	E60

continued...

Signal Name	Ball #
PROC_TDI	F63
PROC_TDO	F62
PROC_TMS	E61
PROC_TRST#	E59
PROCHOT#	K63
PROCPWRGD	C61
PWR_DEBUG#	H59
PWRBTN#	AL7
RCIN# / GPIO82	V4
RSMRST#	AW6
RSVD	W23
RSVD	Y22
RSVD	B43
RSVD	T59
RSVD	AD60
RSVD	AD59
RSVD	AA59
RSVD	AE60
RSVD	AC59
RSVD	AG58
RSVD	V59
RSVD	U59
RSVD	AL1
RSVD	AP7
RSVD	AM11
RSVD	AV62
RSVD	D58
RSVD	P20
RSVD	R20
RSVD	N60
RSVD	AV2
RSVD	AF20
RSVD	AB21
RSVD	AY14
RSVD	AW14
RSVD	E15

continued...

Signal Name	Ball #
RSVD	E13
RSVD	AL11
RSVD	AC4
RSVD	A5
RSVD	N23
RSVD	T23
RSVD	U10
RSVD	R23
RSVD	L11
RSVD	K10
RSVD	F22
RSVD	H22
RSVD	J21
RSVD	AT2
RSVD	AU44
RSVD	AV44
RSVD	D15
RSVD	AU10
RSVD	AU15
RSVD	E1
RSVD	D1
RSVD	J20
RSVD	H18
RSVD	AN10
RSVD	AM10
RSVD	L59
RSVD	J58
RSVD	Y20
RSVD	AC20
RSVD	V21
RSVD	N58
RSVD	AC58
RSVD	AB23
RSVD	AD23
RSVD	AA23
RSVD	AE59
	continued...

Signal Name	Ball #
RSVD	K18
RSVD	M20
RSVD	K21
RSVD	M21
RSVD_TP	AV63
RSVD_TP	AU63
RSVD_TP	C63
RSVD_TP	C62
RSVD_TP	A51
RSVD_TP	B51
RSVD_TP	P60
RSVD_TP	P61
IVR_ERROR	N59
IST_TRIGGER	N61
RSVD_TP	L60
RTCRST#	AU7
RTCX1	AW5
RTCX2	AY5
SA_CAB4	AU35
SA_CAB6	AV35
SA_CAA5	AY41
SA_CAB1	AU34
SA_CKE0	AU43
SA_CKE1	AW43
SA_CKE2	AY42
SA_CKE3	AY43
SA_CLK#0	AU37
SA_CLK#1	AW36
SA_CLK0	AV37
SA_CLK1	AY36
SA_CS#0	AP33
SA_CS#1	AR32
SA_DQ0	AH63
SA_DQ1	AH62
SA_DQ10	AP63
SA_DQ11	AP62
	continued...

Signal Name	Ball #
SA_DQ12	AM61
SA_DQ13	AM60
SA_DQ14	AP61
SA_DQ15	AP60
SA_DQ32	AY58
SA_DQ33	AW58
SA_DQ34	AY56
SA_DQ35	AW56
SA_DQ2	AK63
SA_DQ36	AV58
SA_DQ37	AU58
SA_DQ38	AV56
SA_DQ39	AU56
SA_DQ40	AY54
SA_DQ41	AW54
SA_DQ42	AY52
SA_DQ43	AW52
SA_DQ44	AV54
SA_DQ45	AU54
SA_DQ3	AK62
SA_DQ46	AV52
SA_DQ47	AU52
SB_DQ0	AY31
SB_DQ1	AW31
SB_DQ2	AY29
SB_DQ3	AW29
SB_DQ4	AV31
SB_DQ5	AU31
SB_DQ6	AV29
SB_DQ7	AU29
SA_DQ4	AH61
SB_DQ8	AY27
SB_DQ9	AW27
SB_DQ10	AY25
SB_DQ11	AW25
SB_DQ12	AV27
	continued...

Signal Name	Ball #
SB_DQ13	AU27
SB_DQ14	AV25
SB_DQ15	AU25
SB_DQ32	AY23
SB_DQ33	AW23
SA_DQ5	AH60
SB_DQ34	AY21
SB_DQ35	AW21
SB_DQ36	AV23
SB_DQ37	AU23
SB_DQ38	AV21
SB_DQ39	AU21
SB_DQ40	AY19
SB_DQ41	AW19
SB_DQ42	AY17
SB_DQ43	AW17
SA_DQ6	AK61
SB_DQ44	AV19
SB_DQ45	AU19
SB_DQ46	AV17
SB_DQ47	AU17
SA_DQ7	AK60
SA_DQ8	AM63
SA_DQ9	AM62
SA_DQSN0	AJ61
SA_DQSN1	AN62
SA_DQSN4	AV57
SA_DQSN5	AV53
SB_DQSN0	AW30
SB_DQSN1	AV26
SB_DQSN4	AW22
SB_DQSN5	AV18
SA_DQSP0	AJ62
SA_DQSP1	AN61
SA_DQSP4	AW57
SA_DQSP5	AW53

continued...

Signal Name	Ball #
SB_DQSP0	AV30
SB_DQSP1	AW26
SB_DQSP4	AV22
SB_DQSP5	AW18
SA_CAB9	AU36
SA_CAB8	AY37
SA_CAB7	AP35
SA_CAA7	AW41
SA_CAA6	AU41
SA_CAB0	AR35
SA_CAA9	AV42
SA_CAA8	AU42
SA_CAB5	AR38
NOT USED	AP36
NOT USED	AU39
SA_CAA0	AR36
SA_CAA2	AV40
SA_CAA4	AW39
SA_CAA3	AY39
SA_CAA1	AU40
SA_ODT0	AP32
SA_CAB3	AY34
SA_CAB2	AW34
SATA_IREF	A12
SATA_RCOMP	C12
SATA_Rn0 / PERn6_L3	J5
SATA_Rn1 / PERn6_L2	J8
SATA_Rn2 / PERn6_L1	J6
SATA_Rn3 / PERn6_L0	F5
SATA_Rp0 / PERp6_L3	H5
SATA_Rp1 / PERp6_L2	H8
SATA_Rp2 / PERp6_L1	H6

continued...

Signal Name	Ball #
SATA_Rp3 / PERp6_L0	E5
SATA_Tn0 / PETn6_L3	B15
SATA_Tn1 / PETn6_L2	A17
SATA_Tn2 / PETn6_L1	B14
SATA_Tn3 / PETn6_L0	C17
SATA_Tp0 / PETp6_L3	A15
SATA_Tp1 / PETp6_L2	B17
SATA_Tp2 / PETp6_L1	C15
SATA_Tp3 / PETp6_L0	D17
SATA0GP / GPIO34	V1
SATA1GP / GPIO35	U1
SATA2GP / GPIO36	V6
SATA3GP / GPIO37	AC1
SATALED#	U3
SB_CAB4	AL35
SB_CAB6	AM36
SB_CAA5	AU49
SB_CAB1	AM33
SB_CK#0	AM38
SB_CK#1	AK38
SB_CK0	AN38
SB_CK1	AL38
SB_CKE0	AY49
SB_CKE1	AU50
SB_CKE2	AW49
SB_CKE3	AV50
SB_CS#0	AM32
SB_CS#1	AK32
SA_DQ16	AP58
SA_DQ17	AR58
SA_DQ26	AM54

continued...

Signal Name	Ball #
SA_DQ27	AK54
SA_DQ28	AL55
SA_DQ29	AK55
SA_DQ30	AR54
SA_DQ31	AN54
SA_DQ48	AK40
SA_DQ49	AK42
SA_DQ50	AM43
SA_DQ51	AM45
SA_DQ18	AM57
SA_DQ52	AK45
SA_DQ53	AK43
SA_DQ54	AM40
SA_DQ55	AM42
SA_DQ56	AM46
SA_DQ57	AK46
SA_DQ58	AM49
SA_DQ59	AK49
SA_DQ60	AM48
SA_DQ61	AK48
SA_DQ19	AK57
SA_DQ62	AM51
SA_DQ63	AK51
SB_DQ16	AM29
SB_DQ17	AK29
SB_DQ18	AL28
SB_DQ19	AK28
SB_DQ20	AR29
SB_DQ21	AN29
SB_DQ22	AR28
SB_DQ23	AP28
SA_DQ20	AL58
SB_DQ24	AN26
SB_DQ25	AR26
SB_DQ26	AR25
SB_DQ27	AP25

continued...

Signal Name	Ball #
SB_DQ28	AK26
SB_DQ29	AM26
SB_DQ30	AK25
SB_DQ31	AL25
SB_DQ48	AR21
SB_DQ49	AR22
SA_DQ21	AK58
SB_DQ50	AL21
SB_DQ51	AM22
SB_DQ52	AN22
SB_DQ53	AP21
SB_DQ54	AK21
SB_DQ55	AK22
SB_DQ56	AN20
SB_DQ57	AR20
SB_DQ58	AK18
SB_DQ59	AL18
SA_DQ22	AR57
SB_DQ60	AK20
SB_DQ61	AM20
SB_DQ62	AR18
SB_DQ63	AP18
SA_DQ23	AN57
SA_DQ24	AP55
SA_DQ25	AR55
SA_DQSN2	AM58
SA_DQSN3	AM55
SA_DQSN6	AL43
SA_DQSN7	AL48
SB_DQSN2	AN28
SB_DQSN3	AN25
SB_DQSN6	AN21
SB_DQSN7	AN18
SA_DQSP2	AN58
SA_DQSP3	AN55
SA_DQSP6	AL42

continued...

Signal Name	Ball #
SA_DQSP7	AL49
SB_DQSP2	AM28
SB_DQSP3	AM25
SB_DQSP6	AM21
SB_DQSP7	AM18
SB_CAB9	AP40
SB_CAB8	AR40
SB_CAB7	AK36
SB_CAA7	AV47
SB_CAA6	AU47
SB_CAB0	AK33
SB_CAA9	AR46
SB_CAA8	AP46
SB_CAB5	AP42
NOT USED	AR42
NOT USED	AR45
SB_CAA0	AP45
SB_CAA2	AW46
SB_CAA4	AY46
SB_CAA3	AY47
SB_CAA1	AU46
SB_ODT0	AL32
SB_CAB3	AM35
SB_CAB2	AK35
SDIO_CLK / GPIO64	E3
SDIO_CMD / GPIO65	F4
SDIO_D0 / GPIO66	D3
SDIO_D1 / GPIO67	E4
SDIO_D2 / GPIO68	C3
SDIO_D3 / GPIO69	E2
SDIO_POWER_EN / GPIO70	C4
SERIRQ	T4
SLP_A#	AL5
SLP_LAN#	AJ7

continued...

Signal Name	Ball #
SLP_S0#	AF3
SLP_S3#	AT4
SLP_S4#	AJ6
SLP_S5# / GPIO63	AP5
SLP_SUS#	AP4
SLP_WLAN# / GPIO29	AM5
SM_DRAMRST#	AV15
SM_PG_CNTL1	AV61
SM_RCOMP0	AU60
SM_RCOMP1	AV60
SM_RCOMP2	AU61
SM_VREF_CA	AP49
SM_VREF_DQ0	AR51
SM_VREF_DQ1	AP51
SMBALERT# / GPIO11	AN2
SMBCLK	AP2
SMBDATA	AH1
SML0ALERT# / GPIO60	AL2
SML0CLK	AN1
SML0DATA	AK1
SML1ALERT# / PCHHOT# / GPIO73	AU4
SML1CLK / GPIO75	AU3
SML1DATA / GPIO74	AH3
SPI_CLK	AA3
SPI_CS0#	Y7
SPI_CS1#	Y4
SPI_CS2#	AC2
SPI_IO2	Y6
SPI_IO3	AF1
SPI_MISO	AA4
SPI_MOSI	AA2
SPKR / GPIO81	V2
SRTCRST#	AV6

continued...

Signal Name	Ball #
SUS_STAT# / GPIO61	AG4
SUSACK#	AK2
SUSCLK / GPIO62	AE6
SUSWARN# / SUSPWRDNACK / GPIO30	AV4
SYS_PWROK	AG2
SYS_RESET#	AC3
TD_IREF	B12
TESTLOW_AK8	AK8
TESTLOW_AL8	AL8
TESTLOW_C34	C34
TESTLOW_C35	C35
THERMTRIP#	D60
UART0_CTS# / GPIO94	G1
UART0_RTS# / GPIO93	J2
UART0_RXD / GPIO91	J1
UART0_TXD / GPIO92	K3
UART1_CTS# / GPIO3	J4
UART1_RST# / GPIO2	J3
UART1_RXD / GPIO0	K4
UART1_TXD / GPIO1	G2
USB2n0	AN8
USB2n1	AR7
USB2n2	AR8
USB2n3	AR10
USB2n4	AM15
USB2n5	AM13
USB2n6	AP11
USB2n7	AR13
USB2p0	AM8
USB2p1	AT7

continued...

Signal Name	Ball #
USB2p2	AP8
USB2p3	AT10
USB2p4	AL15
USB2p5	AN13
USB2p6	AN11
USB2p7	AP13
USB3Rn1	G20
USB3Rn2	E18
USB3Rp1	H20
USB3Rp2	F18
USB3Tn1	C33
USB3Tn2	B33
USB3Tp1	B34
USB3Tp2	A33
USBRBIAS	AJ11
USBRBIAS#	AJ10
VCC	F59
VCC	AB57
VCC	AD57
VCC	AG57
VCC	C24
VCC	C28
VCC	C32
VCC	C36
VCC	C40
VCC	C44
VCC	C48
VCC	C52
VCC	C56
VCC	E23
VCC	E25
VCC	E27
VCC	E29
VCC	E31
VCC	E33
VCC	E35

continued...

Signal Name	Ball #
VCC	E37
VCC	E39
VCC	E41
VCC	E43
VCC	E45
VCC	E47
VCC	E49
VCC	E51
VCC	E53
VCC	E55
VCC	E57
VCC	F24
VCC	F28
VCC	F32
VCC	F36
VCC	F40
VCC	F44
VCC	F48
VCC	F52
VCC	F56
VCC	G23
VCC	G25
VCC	G27
VCC	G29
VCC	G31
VCC	G33
VCC	G35
VCC	G37
VCC	G39
VCC	G41
VCC	G43
VCC	G45
VCC	G47
VCC	G49
VCC	G51
VCC	G53
	continued...

Signal Name	Ball #
VCC	G55
VCC	G57
VCC	H23
VCC	J23
VCC	K23
VCC	K57
VCC	L22
VCC	M23
VCC	M57
VCC	P57
VCC	U57
VCC	W57
VCC_SENSE	E63
VCC1_05	P9
VCC1_05	N8
VCC1_05	AE8
VCC1_05	AF22
VCC1_05	H11
VCC1_05	H15
VCC1_05	J11
VCC1_05	AG16
VCC1_05	AG17
VCC3_3	V8
VCC3_3	W9
VCC3_3	K14
VCC3_3	K16
VCCACLKPLL	A20
VCCAPLL	AA21
VCCAPLL	W21
VCCASW	AE9
VCCASW	AF9
VCCASW	AG8
VCCASW	AG13
VCCASW	AG14
VCCCLK	J18
VCCCLK	K19
	continued...

Signal Name	Ball #
VCCCLK	J17
VCCCLK	T21
VCCCLK	R21
VCCDSW3_3	AH10
VCCHDA	AH14
VCCHSIO	M9
VCCHSIO	K9
VCCHSIO	L10
VCCIO_OUT	A59
VCOMP_OUT	E20
VCCRTC	AG10
VCCSATA3PLL	B11
VCCSDIO	U8
VCCSDIO	T9
VCCSPI	Y8
VCCST	AC22
VCCST	AE22
VCCST	AE23
VCCST_PWRGD	B59
VCCSUS3_3	AH11
VCCSUS3_3	AA9
VCCSUS3_3	AC9
VCCSUS3_3	AE20
VCCSUS3_3	AE21
VCCTS1_5	J15
VCCUSB3PLL	B18
VDDQ	AH26
VDDQ	AJ31
VDDQ	AJ33
VDDQ	AJ37
VDDQ	AN33
VDDQ	AP43
VDDQ	AR48
VDDQ	AY35
VDDQ	AY40
VDDQ	AY44
	continued...

Signal Name	Ball #
VDDQ	AY50
VIDALERT#	L62
VIDSCLK	N63
VIDSOUT	L63
VR_EN	F60
VR_READY	C59
VSS	P62
VSS	D63
VSS	P22
VSS	N21
VSS	A11
VSS	A14
VSS	A18
VSS	A24
VSS	A28
VSS	A32
VSS	A36
VSS	A40
VSS	A48
VSS	A52
VSS	A56
VSS	AA1
VSS	A44
VSS	AA58
VSS	AB10
VSS	AB20
VSS	AE5
VSS	AB22
VSS	AB7
VSS	AC61
VSS	AD3
VSS	AD63
VSS	AE10
VSS	AD21
VSS	AE58
VSS	AR43

continued...

Signal Name	Ball #
VSS	C39
VSS	AF11
VSS	AF12
VSS	AF14
VSS	AF15
VSS	AF17
VSS	AF18
VSS	AG21
VSS	AG23
VSS	AG1
VSS	AG11
VSS	AG60
VSS	AG61
VSS	AG62
VSS	AG63
VSS	AH17
VSS	AH19
VSS	AH20
VSS	AH22
VSS	AH24
VSS	AH28
VSS	AH30
VSS	AH32
VSS	AH34
VSS	AH36
VSS	AH38
VSS	AH40
VSS	AH42
VSS	AH44
VSS	AH49
VSS	AH51
VSS	AH53
VSS	AH55
VSS	AH57
VSS	AJ13
VSS	AJ14

continued...

Signal Name	Ball #
VSS	AJ23
VSS	AJ25
VSS	AJ27
VSS	AJ29
VSS	AJ35
VSS	AJ39
VSS	AJ41
VSS	AJ43
VSS	AJ45
VSS	AJ47
VSS	AJ50
VSS	AJ52
VSS	AJ54
VSS	AJ56
VSS	AJ58
VSS	AJ60
VSS	AJ63
VSS	AK23
VSS	AK3
VSS	AK52
VSS	AL10
VSS	AL13
VSS	AL17
VSS	AL20
VSS	AL22
VSS	AL23
VSS	AL26
VSS	AL29
VSS	AL31
VSS	AL33
VSS	AL36
VSS	AL39
VSS	AL40
VSS	AL45
VSS	AL46
VSS	AL51

continued...

Signal Name	Ball #
VSS	AL52
VSS	AL54
VSS	AL57
VSS	AL60
VSS	AL61
VSS	AM1
VSS	AM17
VSS	AM23
VSS	AM31
VSS	AM52
VSS	AN17
VSS	AN23
VSS	AN31
VSS	AN32
VSS	AN35
VSS	AN36
VSS	AN39
VSS	AN40
VSS	AN42
VSS	AN43
VSS	AN45
VSS	AN46
VSS	AN48
VSS	AN49
VSS	AN51
VSS	AN52
VSS	AN60
VSS	AN63
VSS	AN7
VSS	AP10
VSS	AP17
VSS	AP20
VSS	AP22
VSS	AP23
VSS	AP26
VSS	AP29
	continued...

Signal Name	Ball #
VSS	AP3
VSS	AP31
VSS	AP38
VSS	AP39
VSS	AP52
VSS	AP54
VSS	AP57
VSS	AR11
VSS	AR15
VSS	AR17
VSS	AR23
VSS	AR31
VSS	AR33
VSS	AR39
VSS	AP48
VSS	AR49
VSS	AR5
VSS	AR52
VSS	AT13
VSS	AT35
VSS	AT37
VSS	AT40
VSS	AT42
VSS	AT43
VSS	AT46
VSS	AT49
VSS	AT61
VSS	AT62
VSS	AT63
VSS	AU1
VSS	AU16
VSS	AU18
VSS	AU20
VSS	AU22
VSS	AU24
VSS	AU26
	continued...

Signal Name	Ball #
VSS	AU28
VSS	AU30
VSS	AU33
VSS	AU51
VSS	AU53
VSS	AU55
VSS	AU57
VSS	AU59
VSS	AV14
VSS	D62
VSS	AV16
VSS	AV20
VSS	AV24
VSS	AV28
VSS	AV33
VSS	AV34
VSS	AV36
VSS	AV39
VSS	AV41
VSS	AV43
VSS	AV46
VSS	AV49
VSS	AV51
VSS	AV55
VSS	AV59
VSS	AV8
VSS	AW16
VSS	AW24
VSS	AW33
VSS	AW35
VSS	AW37
VSS	AW4
VSS	AW40
VSS	AW42
VSS	AW44
VSS	AW47
	continued...

Signal Name	Ball #
VSS	AW50
VSS	AW51
VSS	AW59
VSS	AW60
VSS	AY11
VSS	AY16
VSS	AY18
VSS	AY22
VSS	AY24
VSS	AY26
VSS	AY30
VSS	AY33
VSS	AY51
VSS	AY53
VSS	AY57
VSS	AY59
VSS	AY6
VSS	AY4
VSS	B20
VSS	B24
VSS	B26
VSS	B28
VSS	B32
VSS	C38
VSS	B36
VSS	B4
VSS	B40
VSS	B44
VSS	C14
VSS	B48
VSS	B52
VSS	B56
VSS	B60
VSS	C11
VSS	C18
VSS	C20
	continued...

Signal Name	Ball #
VSS	C25
VSS	C27
VSS	D12
VSS	D14
VSS	D18
VSS	D21
VSS	D23
VSS	D25
VSS	D26
VSS	D27
VSS	D29
VSS	D2
VSS	D30
VSS	D31
VSS	D33
VSS	D34
VSS	D35
VSS	D37
VSS	D38
VSS	D39
VSS	D41
VSS	D42
VSS	D43
VSS	D45
VSS	D46
VSS	D47
VSS	D49
VSS	D50
VSS	D51
VSS	D53
VSS	D54
VSS	D55
VSS	D57
VSS	D59
VSS	E11
VSS	E17
	continued...

Signal Name	Ball #
VSS	F42
VSS	F20
VSS	D5
VSS	F26
VSS	F30
VSS	F34
VSS	F38
VSS	G6
VSS	F46
VSS	F50
VSS	F54
VSS	F58
VSS	F61
VSS	G18
VSS	G22
VSS	G3
VSS	G5
VSS	G8
VSS	H13
VSS	H17
VSS	H57
VSS	J10
VSS	J22
VSS	J59
VSS	J63
VSS	K1
VSS	K12
VSS	R22
VSS	L13
VSS	L15
VSS	L17
VSS	L18
VSS	L20
VSS	L58
VSS	L61
VSS	L7
	continued...

Signal Name	Ball #
VSS	M22
VSS	N10
VSS	N3
VSS	C57
VSS	P59
VSS	P63
VSS	R10
VSS	R8
VSS	T1
VSS	T58
VSS	D8
VSS	U20
VSS	U22
VSS	U61
VSS	V10
VSS	V3
VSS	V7
VSS	W20
VSS	Y10
VSS	U9
VSS	Y59
VSS	Y63
VSS	W22
VSS	V58
VSS	AH46
VSS	V23
VSS	AH16
VSS_SENSE	E62
WAKE#	AJ5
XTAL24_IN	A25
XTAL24_OUT	B25

Mouser Electronics

Authorized Distributor

Click to View Pricing, Inventory, Delivery & Lifecycle Information:

Intel:
CL8064701512303S R18D CL8064701477400S R1ED CL8064701478404S R1EK CL8064701558601S R192 CL8064701479801S R1DM

OCEAN CHIPS
Океан Электроники
Поставка электронных компонентов

Компания «Океан Электроники» предлагает заключение долгосрочных отношений при поставках импортных электронных компонентов на взаимовыгодных условиях!

Наши преимущества:

- Поставка оригинальных импортных электронных компонентов напрямую с производств Америки, Европы и Азии, а так же с крупнейших складов мира;
- Широкая линейка поставок активных и пассивных импортных электронных компонентов (более 30 млн. наименований);
- Поставка сложных, дефицитных, либо снятых с производства позиций;
- Оперативные сроки поставки под заказ (от 5 рабочих дней);
- Экспресс доставка в любую точку России;
- Помощь Конструкторского Отдела и консультации квалифицированных инженеров;
- Техническая поддержка проекта, помощь в подборе аналогов, поставка прототипов;
- Поставка электронных компонентов под контролем ВП;
- Система менеджмента качества сертифицирована по Международному стандарту ISO 9001;
- При необходимости вся продукция военного и аэрокосмического назначения проходит испытания и сертификацию в лаборатории (по согласованию с заказчиком);
- Поставка специализированных компонентов военного и аэрокосмического уровня качества (Xilinx, Altera, Analog Devices, Intersil, Interpoint, Microsemi, Actel, Aeroflex, Peregrine, VPT, Syfer, Eurofarad, Texas Instruments, MS Kennedy, Miteq, Cobham, E2V, MA-COM, Hittite, Mini-Circuits, General Dynamics и др.);

Компания «Океан Электроники» является официальным дистрибьютором и эксклюзивным представителем в России одного из крупнейших производителей разъемов военного и аэрокосмического назначения **«JONHON»**, а так же официальным дистрибьютором и эксклюзивным представителем в России производителя высокотехнологичных и надежных решений для передачи СВЧ сигналов **«FORSTAR»**.

AVIC JONHON

«JONHON» (основан в 1970 г.)

Разъемы специального, военного и аэрокосмического назначения:

(Применяются в военной, авиационной, аэрокосмической, морской, железнодорожной, горно- и нефтедобывающей отраслях промышленности)

«FORSTAR» (основан в 1998 г.)

ВЧ соединители, коаксиальные кабели, кабельные сборки и микроволновые компоненты:

(Применяются в телекоммуникациях гражданского и специального назначения, в средствах связи, РЛС, а так же военной, авиационной и аэрокосмической отраслях промышленности).

FORSTAR®

Телефон: 8 (812) 309-75-97 (многоканальный)
Факс: 8 (812) 320-03-32
Электронная почта: ocean@oceanchips.ru
Web: http://oceanchips.ru/
Адрес: 198099, г. Санкт-Петербург, ул. Калинина, д. 2, корп. 4, лит. А