Not Recommended for New Designs

CC1050
Single Chip Very Low Power RF Transmitter

Applications

- *Very low power UHF wireless data transmitters*
- *315 / 433 / 868 and 915 MHz ISM/SRD band systems*
- *RKE – Remote Keyless Entry*
- *Home automation*
- *Wireless alarm and security systems*
- *AMR – Automatic Meter Reading*
- *Low power telemetry*
- *Game Controllers and advanced toys*

Product Description

CC1050 is a true single-chip UHF transmitter designed for very low power and very low voltage wireless applications. The circuit is mainly intended for the ISM (Industrial, Scientific and Medical) and SRD (Short Range Device) frequency bands at 315, 433, 868 and 915 MHz, but can easily be programmed for operation at other frequencies in the 300-1000 MHz range.

The main operating parameters of ***CC1050*** can be programmed via an easy-to-interface serial bus, thus making ***CC1050*** a very flexible and easy to use transmitter. In a typical system ***CC1050*** will be used together with a microcontroller and a few external passive components.

CC1050 is based on Chipcon's SmartRF® technology in 0.35 μm CMOS.

Features

- True single chip UHF RF transmitter
- Very low current consumption
- Frequency range 300 – 1000 MHz
- Programmable output power –20 to 12 dBm
- Small size (TSSOP-24 package)
- Low supply voltage (2.1 V to 3.6 V)
- Very few external components required
- Single-ended antenna connection
- FSK data rate up to 76.8 kBaud
- Complies with EN 300 220 and FCC CFR47 part 15
- Programmable frequency in 250 Hz steps makes crystal temperature drift compensation possible without TCXO
- Suitable for frequency hopping protocols
- Development Kit available
- Easy-to-use software for generating the ***CC1050*** configuration data

Table of Contents

Absolute Maximum Ratings 4
Operating Conditions 4
Electrical Specifications 4
Pin Assignment 7
Application Circuit 9
Configuration Overview 10
Configuration Software 11
3-wire Serial Configuration Interface 12
Microcontroller Interface 14
Signal interface 15
Frequency programming 17
VCO 17
VCO and PLL self-calibration 17
VCO current control 21
Power management 21
Output Matching 24
Output power programming 25
Crystal oscillator 26
Optional LC Filter 27
System Considerations and Guidelines 28
PCB Layout Recommendations 29
Antenna Considerations 29
Configuration registers 30
Package Description (TSSOP-24) 38
Soldering Information 38
Plastic Tube Specification 38

Carrier Tape and Reel Specification 38

Ordering Information 39

General Information 39

Address Information 40

Absolute Maximum Ratings

Parameter	Min.	Max.	Units	Condition
Supply voltage, VDD	-0.3	5.0	V	
Voltage on any pin	-0.3	VDD+0.3, max 5.0	V	
Input RF level		10	dBm	
Storage temperature range	-50	150	°C	
Reflow soldering temperature		260	°C	T = 10 s

Under no circumstances the absolute maximum ratings given above should be violated. Stress exceeding one or more of the limiting values may cause permanent damage to the device.

***Caution!** ESD sensitive device. Precaution should be used when handling the device in order to prevent permanent damage.*

Operating Conditions

Parameter	Min.	Typ.	Max.	Unit	Condition / Note
RF Frequency Range	300		1000	MHz	Programmable in steps of 250 Hz
Operating ambient temperature range	-40		85	°C	
Supply voltage	2.1	3.0	3.6	V	Note: The same supply voltage should be used for digital (DVDD) and analogue (AVDD) power.

Electrical Specifications

Tc = 25°C, VDD = 3.0 V if nothing else stated

Parameter	Min.	Typ.	Max.	Unit	Condition / Note
Transmit Section					
Transmit data rate	0.6		76.8	kBaud	NRZ or Manchester encoding. 76.8 kBaud equals 76.8 kbit/s using NRZ coding. See page 15.
Binary FSK frequency separation	0		65	kHz	The frequency separation is programmable in 250 Hz steps. 65 kHz is the maximum guaranteed separation at 1 MHz reference frequency. Larger separations can be achieved at higher reference frequencies.
Output power 433 MHz 868 MHz	 -20 -20		 12 8	 dBm dBm	Delivered to 50 Ω load. The output power is programmable.
RF output impedance 433/868 MHz		110 / 70		Ω	Transmit mode. For matching details see p.24.

Parameter	Min.	Typ.	Max.	Unit	Condition / Note
Spurious emission			-36	dBm	Complies with EN 300 220
Harmonics		-20		dBc	An external LC should be used to reduce harmonics emission to comply with SRD requirements. See p.27.
Frequency Synthesiser Section					
Crystal Oscillator Frequency	3		16	MHz	Crystal frequency can be 3-4, 6-8 or 9-16 MHz. Recommended frequencies are 3.6864, 7.3728, 11.0592 and 14.7456. See page 26 for details.
Crystal frequency accuracy requirement		± 50 ± 25		ppm	433 MHz 868 MHz The crystal frequency accuracy and drift (ageing and temperature dependency) will determine the frequency accuracy of the transmitted signal.
Crystal operation		Parallel			C3 and C4 are loading capacitors, see page 26
Crystal load capacitance	12 12 12	22 16 16	30 30 16	pF pF pF	3-8 MHz, 22 pF recommended 6-8 MHz, 16 pF recommended 9-16 MHz, 16 pF recommended
Crystal oscillator start-up time		4 1.5 2		ms ms ms	3.6864 MHz, 16 pF load 7.3728 MHz, 16 pF load 16 MHz, 16 pF load
Output signal phase noise		-80		dBc/Hz	At 100 kHz offset from carrier
PLL lock time		200		µs	Up to 1 MHz frequency step
PLL turn-on time, crystal oscillator on in power down mode		250		µs	Crystal oscillator running
Digital Inputs/Outputs					
Logic "0" input voltage	0		0.3*VDD	V	
Logic "1" input voltage	0.7*VDD		VDD	V	
Logic "0" output voltage	0		0.4	V	Output current -2.5 mA, 3.0 V supply voltage
Logic "1" output voltage	2.5		VDD	V	Output current 2.5 mA, 3.0 V supply voltage
Logic "0" input current	NA		-1	µA	Input signal equals GND
Logic "1" input current	NA		1	µA	Input signal equals VDD
DI setup time	20			ns	TX mode, minimum time DI must be ready before the positive edge of DCLK
DI hold time	10			ns	TX mode, minimum time DI must be held after the positive edge of DCLK

Parameter	Min.	Typ.	Max.	Unit	Condition / Note
Serial interface (PCLK, PDATA and PALE) timing specification					See Table 2 page 13
Current Consumption					
Power Down mode		0.2	1	µA	Oscillator core off
Current Consumption, transmit mode 433/868 MHz:					
P=0.01mW (-20dBm)		5.5/8.0		mA	The output power is delivered to a 50Ω load
P=0.3mW (-5dBm)		7.3/10.0		mA	
P=1mW (0dBm)		9.1/14.2		mA	
P=3mW (5dBm)		13.3/17.7		mA	
P=6mW (8dBm)		15.9/24.9		mA	
P=16mW (12dBm)		23.3/NA		mA	
Current Consumption, crystal osc.		30 80 105		µA µA µA	3-8 MHz, 16 pF load 9-14 MHz, 12 pF load 14-16 MHz, 16 pF load
Current Consumption, crystal osc. and bias		400		µA	
Current Consumption, crystal osc., bias and synthesiser		4.0 5.5		mA mA	< 500 MHz > 500 MHz

Pin Assignment

Pin no.	Pin name	Pin type	Description
1	AVDD	Power (A)	Power supply (3 V) for analog modules (PA)
2	AGND	Ground (A)	Ground connection (0 V) for analog modules (PA)
3	AGND	Ground (A)	Ground connection (0 V) for analog modules (PA)
4	AGND	Ground (A)	Ground connection (0 V) for analog modules (VCO and prescaler)
5	L1	Analog input	Connection no 1 for external VCO tank inductor
6	L2	Analog input	Connection no 2 for external VCO tank inductor
7	AVDD	Power (A)	Power supply (3 V) for analog modules (VCO and prescaler)
8	CHP_OUT	Analog output	Charge pump current output when external loop filter is used The pin can also be used as PLL Lock indicator. Output is high when PLL is in lock.
9	R_BIAS	Analog output	Connection for external precision bias resistor (82 kΩ, ± 1%)
10	AGND	Ground (A)	Ground connection (0 V) for analog modules (backplane)
11	AVDD	Power (A)	Power supply (3 V) for analog modules (general)
12	AGND	Ground (A)	Ground connection (0 V) for analog modules (general)
13	XOSC_Q2	Analog output	Crystal, pin 2
14	XOSC_Q1	Analog input	Crystal, pin 1, or external clock input
15	AGND	Ground (A)	Ground connection (0 V) for analog modules (guard)
16	DGND	Ground (D)	Ground connection (0 V) for digital modules (substrate)
17	DVDD	Power (D)	Power supply (3 V) for digital modules
18	DGND	Ground (D)	Ground connection (0 V) for digital modules
19	DI	Digital input	Data input in transmit mode
20	DCLK	Digital output	Clock for data in transmit mode
21	PCLK	Digital input	Programming clock for 3-wire bus
22	PDATA	Digital input/output	Programming data for 3-wire bus. Programming data input for write operation, programming data output for read operation
23	PALE	Digital input	Programming address latch enable for 3-wire bus
24	RF_OUT	RF output	RF signal output to antenna

A=Analog, D=Digital

(Top View)

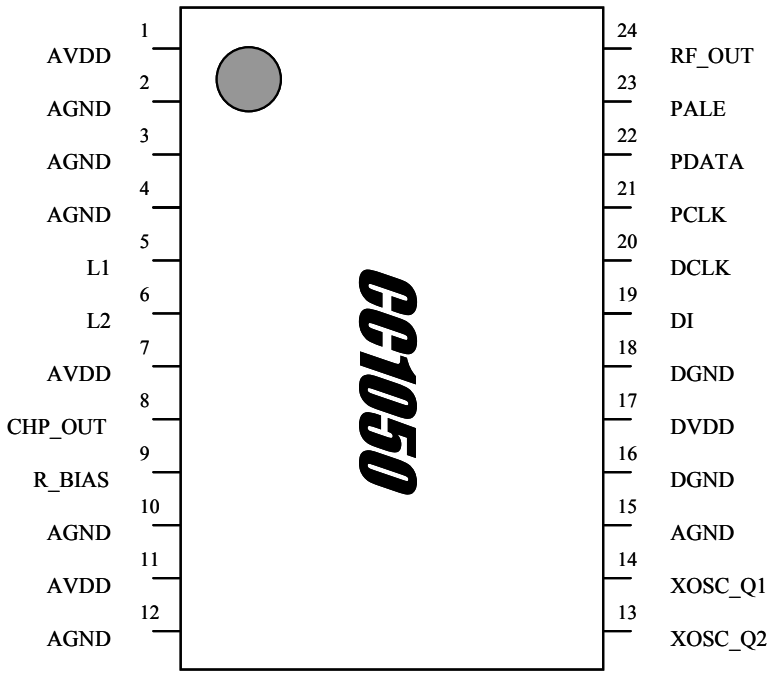

Circuit Description

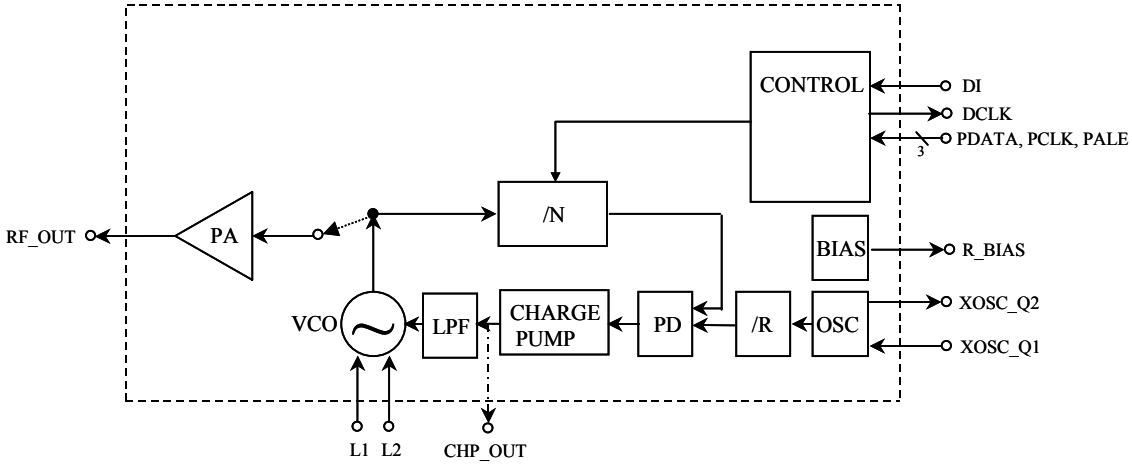

Figure 1. Simplified block diagram

A simplified block diagram of ***CC1050*** is shown in Figure 1. Only signal pins are shown.

The voltage controlled oscillator (VCO) output signal is fed directly to the power amplifier (PA). The RF output is frequency shift keyed (FSK) by the digital bit stream fed to the pin DI. The single ended PA makes the antenna interface and matching very easy.

The frequency synthesiser generates the local oscillator signal which is fed to the PA in transmit mode. The frequency synthesiser consists of a crystal oscillator (OSC), phase detector (PD), charge pump (CHARGE PUMP), VCO, and frequency dividers (/R and /N). An external crystal must be connected to XOSC, and only an external inductor is required for the VCO.

The 3-wire digital serial interface (CONTROL) is used for configuration.

Application Circuit

Very few external components are required for the operation of *CC1050*. A typical application circuit is shown Figure 2. Component values are shown in Table 1.

Output matching
C1, C2 and L2 are used to match the transmitter to 50 Ω. See Output Matching p.24 for details.

VCO inductor
The VCO is completely integrated except for the inductor L1. For further details see p. 17.

Component values for the matching network and VCO inductor are easily calculated using the SmartRF® Studio software.

Crystal oscillator
C3 and C4 are the loading capacitors for the crystal. See page 26 for details.

Additional filtering
Additional filtering (e.g. a low pass LC-filter) may be used in order to reduce the harmonic emission. See also Optional LC Filter p.27 for further information.

Power supply decoupling and filtering
Power supply decoupling and filtering must be used (not shown in the application circuit). The placement and size of the decoupling capacitors and the power supply filtering are very important to achieve the optimum performance. Chipcon provides a reference design (CC1050EB) that should be followed very closely.

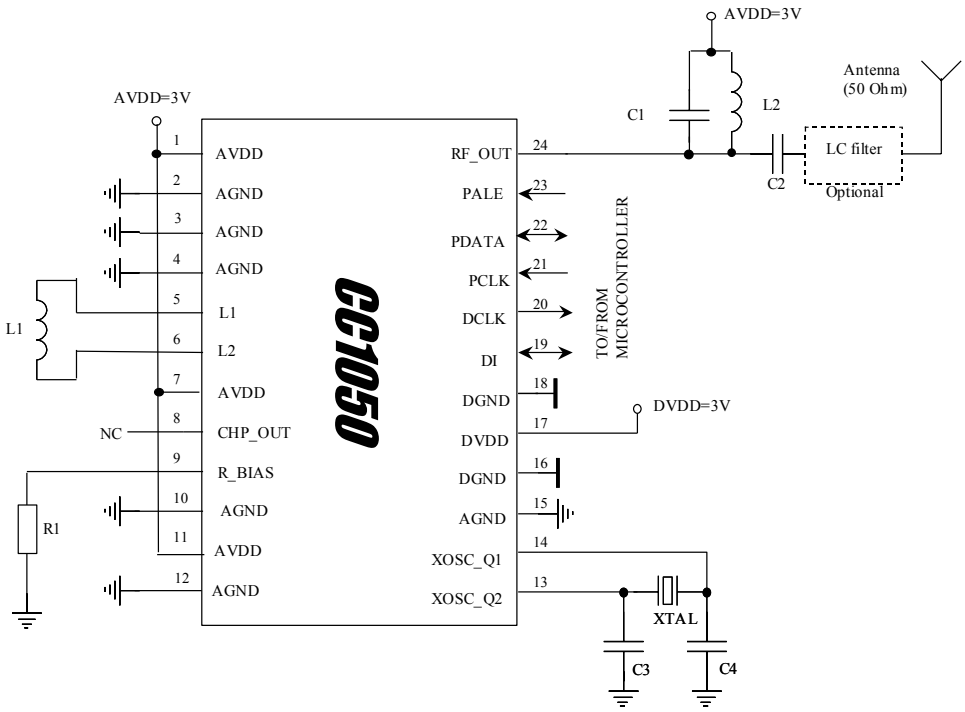

Figure 2. Typical *CC1050* application circuit

Item	315 MHz	433 MHz	868 MHz	915 MHz
C1	5.6 pF, 5%, C0G, 0603	12 pF, 5%, C0G, 0603	4.7 pF, 5%, C0G, 0603	4.7 pF, 5%, C0G, 0603
C2	8.2 pF, 5%, C0G, 0603	6.8 pF, 5%, C0G, 0603	5.6 pF, 5%, C0G, 0603	5.6 pF, 5%, C0G, 0603
C3*	15 pF, 5%, C0G, 0603	15 pF, 5%, C0G, 0603	15 pF, 5%, C0G, 0603	15 pF, 5%, C0G, 0603
C4*	15 pF, 5%, C0G, 0603	15 pF, 5%, C0G, 0603	15 pF, 5%, C0G, 0603	15 pF, 5%, C0G, 0603
L1	56 nH, 5%, 0603	33 nH, 5%, 0603	5.6 nH, 5%, 0603	5.6 nH, 5%, 0603
L2	20 nH, 10%, 0805	6.2 nH, 10%, 0805	2.5 nH, 10%, 0805	2.5 nH, 10%, 0805
R1	82 kΩ, 1%, 0603	82 kΩ, 1%, 0603	82 kΩ, 1%, 0603	82 kΩ, 1%, 0603
XTAL	14.7456 MHz crystal, 16 pF load	14.7456 MHz crystal, 16 pF load	14.7456 MHz crystal, 16 pF load	14.7456 MHz crystal, 16 pF load

Notes:
Items shaded are different for different frequencies.
Component values for 868 and 915 MHz are equal.
*) C3 and C4 will depend on the crystal load capacitance, see page 26.

Table 1. Bill of materials for the application circuit

Configuration Overview

CC1050 can be configured to achieve the best performance for different applications. Through the programmable configuration registers the following key parameters can be programmed:

- Transmit mode / power-down / power-up mode
- RF output power
- Frequency synthesiser key parameters: RF output frequency, FSK frequency separation (deviation), crystal oscillator reference frequency
- Crystal oscillator power-up / power down
- Data rate and data format (NRZ, Manchester coded or UART interface)
- Synthesiser lock indicator mode
- Modulation spectrum shaping

Configuration Software

Chipcon provides users of *CC1050* with a software program, SmartRF® Studio (Windows interface) that generates all necessary *CC1050* configuration data based on the user's selections of various parameters. These hexadecimal numbers will then be the necessary input to the microcontroller for the configuration of *CC1050*. In addition the program will provide the user with the component values needed for the output matching circuit and the VCO inductor.

Figure 3 shows the user interface of the *CC1050* configuration software.

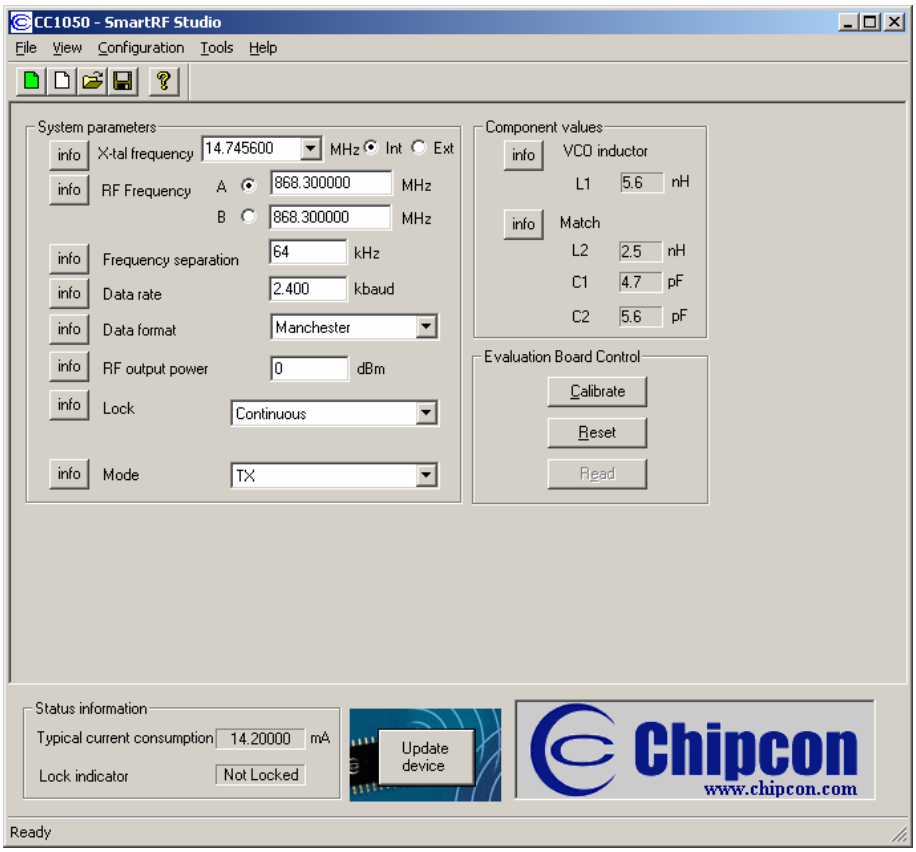

Figure 3. SmartRF® Studio user interface

3-wire Serial Configuration Interface

CC1050 is configured via a simple 3-wire interface (PDATA, PCLK and PALE). There are 19 8-bit configuration registers, each addressed by a 7-bit address. A Read/Write bit initiates a read or write operation. A full configuration of ***CC1050*** requires sending 19 data frames of 16 bits each (7 address bits, R/W bit and 8 data bits). The time needed for a full configuration depend on the PCLK frequency. With a PCLK frequency of 10 MHz the full configuration is done in less than 30 µs. Setting the device in power down mode requires sending one frame only and will in this case take less than 2 µs. All registers are also readable.

In each write-cycle 16 bits are sent on the PDATA-line. The seven most significant bits of each data frame (*A6:0)* are the address-bits. *A6* is the MSB (Most Significant Bit) of the address and is sent as the first bit. The next bit is the R/W bit (high for write, low for read). During address and R/W bit transfer the PALE (Program Address Latch Enable) must be kept low. The 8 data-bits are then transferred (*D7:0*). See Figure 4.

The timing for the programming is also shown in Figure 4 with reference to Table 2. The clocking of the data on PDATA is done on the negative edge of PCLK. When the last bit, *D0*, of the 8 data-bits has been loaded, the data word is loaded in the internal configuration register.

The configuration data is stored in internal RAM and is valid after power-down mode, but not when the power-supply is turned off. The registers can be programmed in any order.

The configuration registers can also be read by the microcontroller via the same configuration interface. The seven address bits are sent first, then the R/W bit set low to initiate the data read-back. ***CC1050*** then returns the data from the addressed register. PDATA is in this case used as an output and must be tri-stated (or set high n the case of an open collector pin) by the microcontroller during the data read-back (D7:0). The read operation is illustrated in Figure 5.

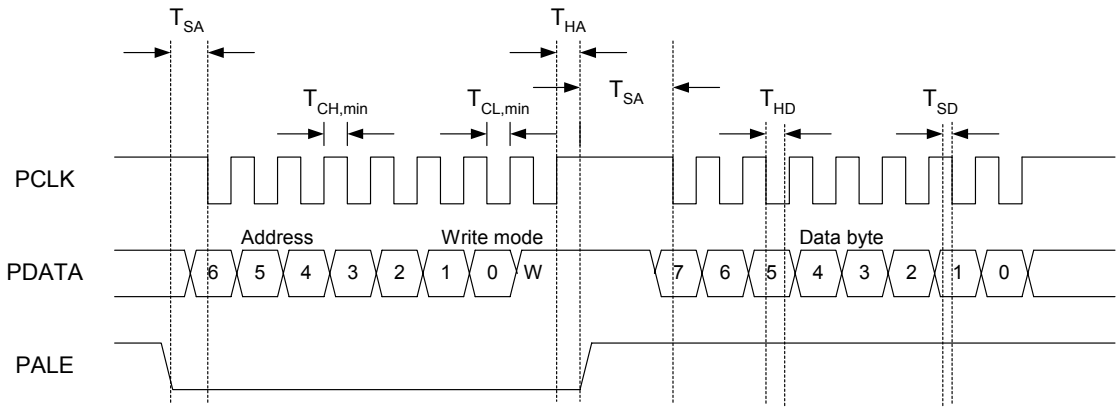

Figure 4. Configuration registers write operation

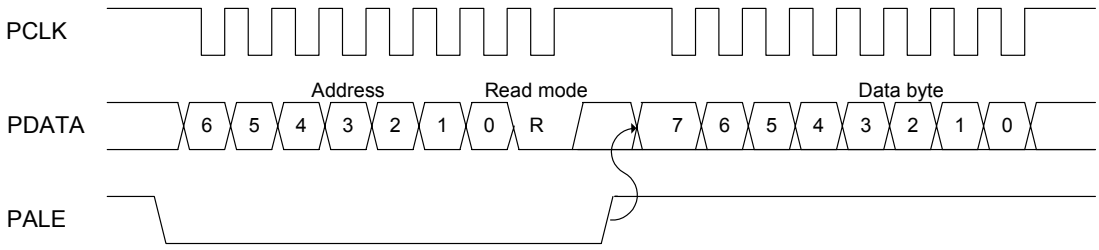

Figure 5. Configuration registers read operation

Parameter	Symbol	Min	Max	Units	Conditions
PCLK, clock frequency	F_{CLOCK}	-	10	MHz	
PCLK low pulse duration	$T_{CL,min}$	50		ns	The minimum time PCLK must be low.
PCLK high pulse duration	$T_{CH,min}$	50		ns	The minimum time PCLK must be high.
PALE setup time	T_{SA}	10	-	ns	The minimum time PALE must be low before negative edge of PCLK.
PALE hold time	T_{HA}	10	-	ns	The minimum time PALE must be held low after the *positive* edge of PCLK.
PDATA setup time	T_{SD}	10	-	ns	The minimum time data on PDATA must be ready before the negative edge of PCLK.
PDATA hold time	T_{HD}	10	-	ns	The minimum time data must be held at PDATA, after the negative edge of PCLK.
Rise time	T_{rise}		100	ns	The maximum rise time for PCLK and PALE
Fall time	T_{fall}		100	ns	The maximum fall time for PCLK and PALE

Note: The set-up- and hold-times refer to 50% of VDD.

Table 2. Serial interface, timing specification

Microcontroller Interface

Used in a typical system, CC1050 will interface to a microcontroller. This microcontroller must be able to:

- Program CC1050 into different modes via the 3-wire serial configuration interface (PDATA, PCLK and PALE).
- Interface to the synchronous data signal interface (DI and DCLK).
- Optionally the microcontroller can do data encoding / decoding.
- Optionally the microcontroller can monitor the frequency lock status from pin CHP_OUT (LOCK).

Connecting the microcontroller

The microcontroller uses 3 output pins for the configuration interface (PDATA, PCLK and PALE). PDATA should be a bi-directional pin for data read-back. The DI pin is used for data to be transmitted. DCLK providing the data timing should be connected to a microcontroller input. Optionally another pin can be used to monitor the LOCK signal (available at the CHP_OUT pin). This signal is logic level high when the PLL is in lock. See Figure **6**.

The microcontroller pins connected to PDATA and PCLK can be used for other purposes when the configuration interface is not used. PDATA and PCLK are high impedance inputs as long as PALE high.

PALE has an internal pull-up resistor and should be left open (tri-stated by the microcontroller) or set to a high level during power down mode in order to prevent a trickle current flowing in the pull-up.

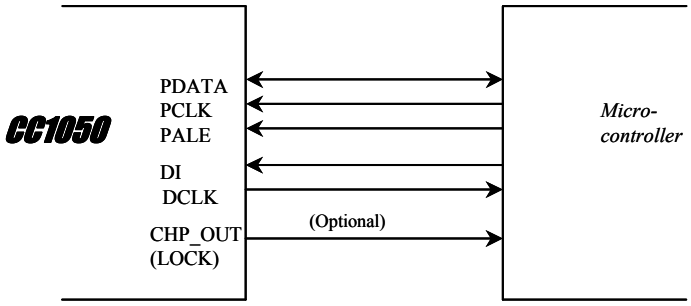

Figure 6. Microcontroller interface

Not Recommended for New Designs

Signal interface

The signal interface consists of DI and DCLK and is used for the data to be transmitted. DI is the data input line and DCLK provides a synchronous clock during data transmission.

The **CC1050** can be used with NRZ (Non-Return-to-Zero) data or Manchester (also known as bi-phase-level) encoded data.

CC1050 can be configured for three different data formats:

Synchronous NRZ mode. **CC1050** provides the data clock at DCLK, and DI is used as data input. Data is clocked into **CC1050** at the rising edge of DCLK. The data is modulated at RF without encoding. **CC1050** can be configured for the data rates 0.6, 1.2, 2.4, 4.8, 9.6, 19.2, 38.4 or 76.8 kbit/s. See Figure 7.

Synchronous Manchester encoded mode. **CC1050** provides the data clock at DCLK, and DI is used as data input. Data is clocked into **CC1050** at the rising edge of DCLK and should be in NRZ format. The data is modulated at RF with Manchester code. The encoding is done by **CC1050**. In this mode **CC1050** can be configured for the data rates 0.3, 0.6, 1.2, 2.4, 4.8, 9.6, 19.2 or 38.4 kbit/s. The 38.4 kbit/s rate corresponds to the maximum 76.8 kBaud due to the Manchester encoding. See Figure 8.

Transparent Asynchronous UART mode. In transmit mode DI is used as data input. The data is modulated at RF without synchronisation or encoding. Data rates in the range from 0.6 to 76.8 kBaud can be used. See Figure 9.

Manchester encoding

In the *Synchronous Manchester encoded mode* **CC1050** uses Manchester coding when modulating the data. The Manchester code is based on transitions; a "0" is encoded as a low-to-high transition, a "1" is encoded as a high-to-low transition. See Figure 10.

The Manchester code ensures that the signal has a constant DC component, which is necessary in some FSK demodulators. Using this mode also ensures compatibility with CC400/CC900 designs.

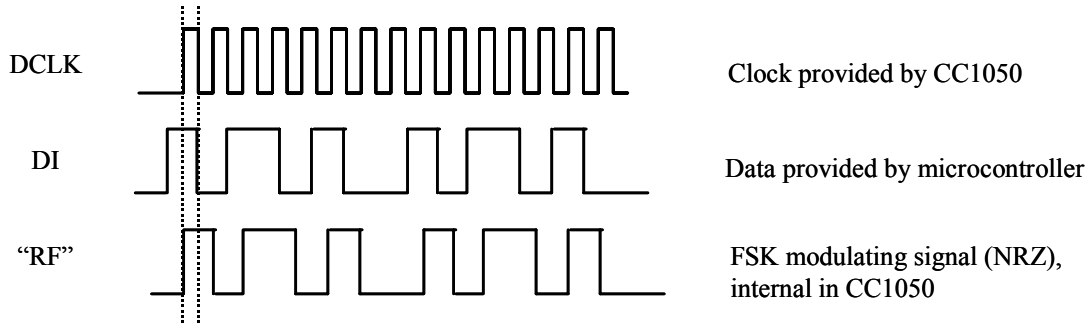

Figure 7. Synchronous NRZ mode

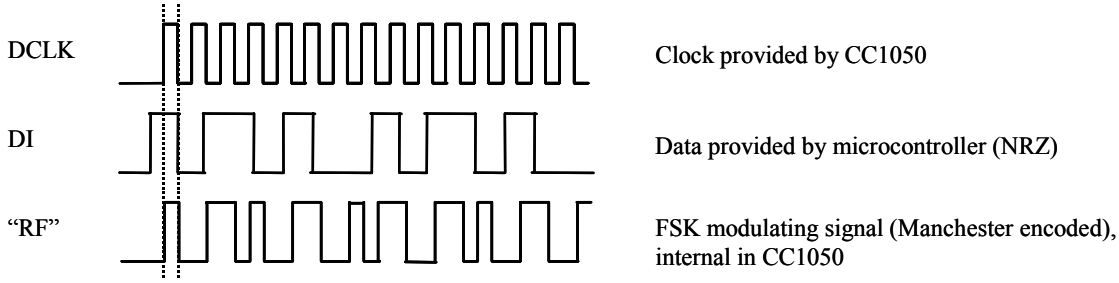

Figure 8. Synchronous Manchester encoded mode

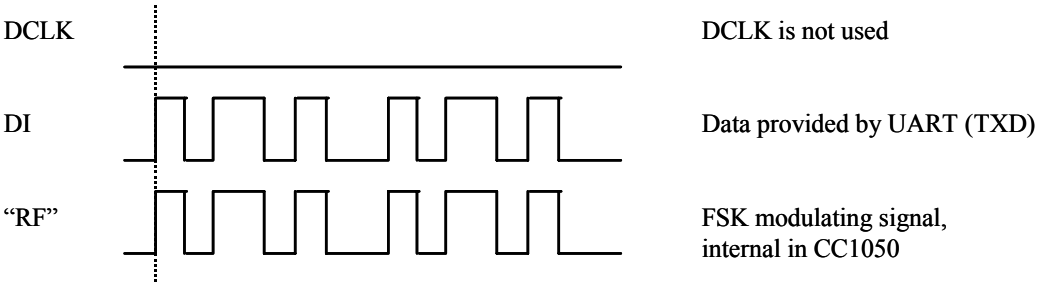

Figure 9. Transparent Asynchronous UART mode

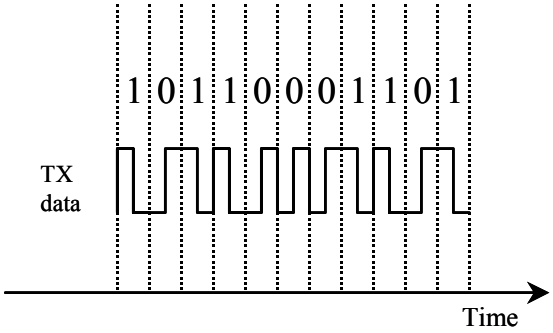

Figure 10. Manchester encoding

Frequency programming

The operation frequency is set by programming the frequency word in the configuration registers. There are two frequency words registers, termed *A* and *B*, which can be programmed to two different frequencies in order to switch fast between two different channels. Frequency word *A* or *B* is selected by the *F_REG* bit in the *MAIN* register.

The frequency word is 24 bits (3 bytes) located in *FREQ_2A:FREQ_1A:FREQ_0A* and *FREQ_2B:FREQ_1B:FREQ_0B* for the *A* and *B* word respectively.

The FSK frequency separation is programmed in the *FSEP1:FSEP0* registers (11 bits).

The frequency word *FREQ* is calculated by:

$$f_{VCO} = f_{ref} \cdot \frac{FREQ + 8192}{16384}$$

where the reference frequency is the crystal oscillator clock divided by *REFDIV* (4 bits in the *PLL* register), a number between 2 and 15:

$$f_{ref} = \frac{f_{xosc}}{REFDIV}$$

The equation above gives the VCO frequency, that is, f_{VCO} is the f_0 frequency for transmit mode (lower FSK frequency).

The upper FSK frequency is given by:
$f_1 = f_0 + f_{sep}$
where f_{sep} is set by the separation word:

$$f_{sep} = f_{ref} \cdot \frac{FSEP}{16384}$$

VCO

Only one external inductor (L1) is required for the VCO. The inductor will determine the operating frequency range of the circuit. It is important to place the inductor as close to the pins as possible in order to reduce stray inductance. It is recommended to use a high Q, low tolerance inductor for best performance.

Typical tuning range for the integrated varactor is 20-25%.

Component values for various frequencies are given in Table 1. Component values for other frequencies can be found using the SmartRF® Studio software.

VCO and PLL self-calibration

To compensate for supply voltage, temperature and process variations the VCO and PLL must be calibrated. The calibration is done automatically and sets maximum VCO tuning range and optimum charge pump current for PLL stability. After setting up the device at the operating frequency, the self-calibration can be initiated by setting the *CAL_START* bit. The calibration result is stored internally in the chip, and is valid as long as power is not turned off. If large supply voltage variations (more than 0.5 V) or temperature variations (more than 40 degrees) occur after calibration, a new calibration should be performed.

The self-calibration is controlled through the *CAL* register (see configuration registers description p. 30). The *CAL_COMPLETE* bit indicates complete calibration. The user can poll this bit, or simply wait for 26 ms (calibration wait time when *CAL_WAIT* = 1). The wait time is proportional to the internal PLL reference frequency. The lowest permitted reference frequency (1 MHz) gives 26 ms wait time, which is therefore the worst case.

Reference frequency [MHz]	Calibration time [ms]
2.4	11
2.0	13
1.5	18
1.0	26

The *CAL_COMPLETE* bit can also be monitored at the CHP_OUT (LOCK) pin (configured by *LOCK_SELECT[3:0])* and used as an interrupt input to the microcontroller.

The CAL_START bit must be set to 0 by the microcontroller after the calibration is done.

There are separate calibration values for the two frequency registers. If the two frequencies, A and B, differ more than 1 MHz, or different VCO currents are used (*VCO_CURRENT[3:0]* in the *CURRENT* register) the calibration should be done separately. The *CAL_DUAL* bit in the *CAL* register controls dual or separate calibration.

The single calibration algorithm using separate calibration for two frequencies is illustrated in Figure 11.

In Figure 12 the dual calibration algorithm is shown.

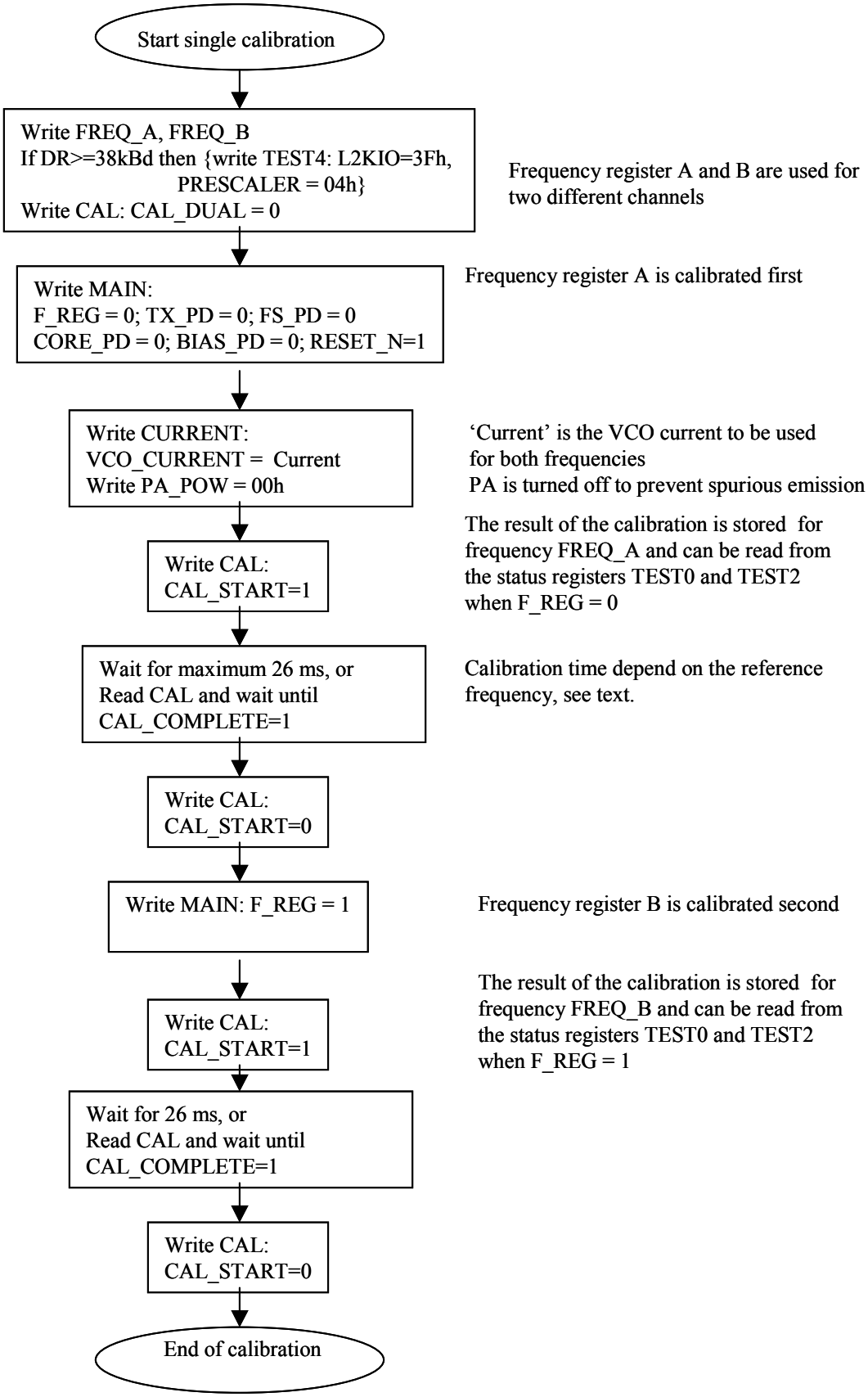

Figure 11. Single calibration algorithm for two different frequencies

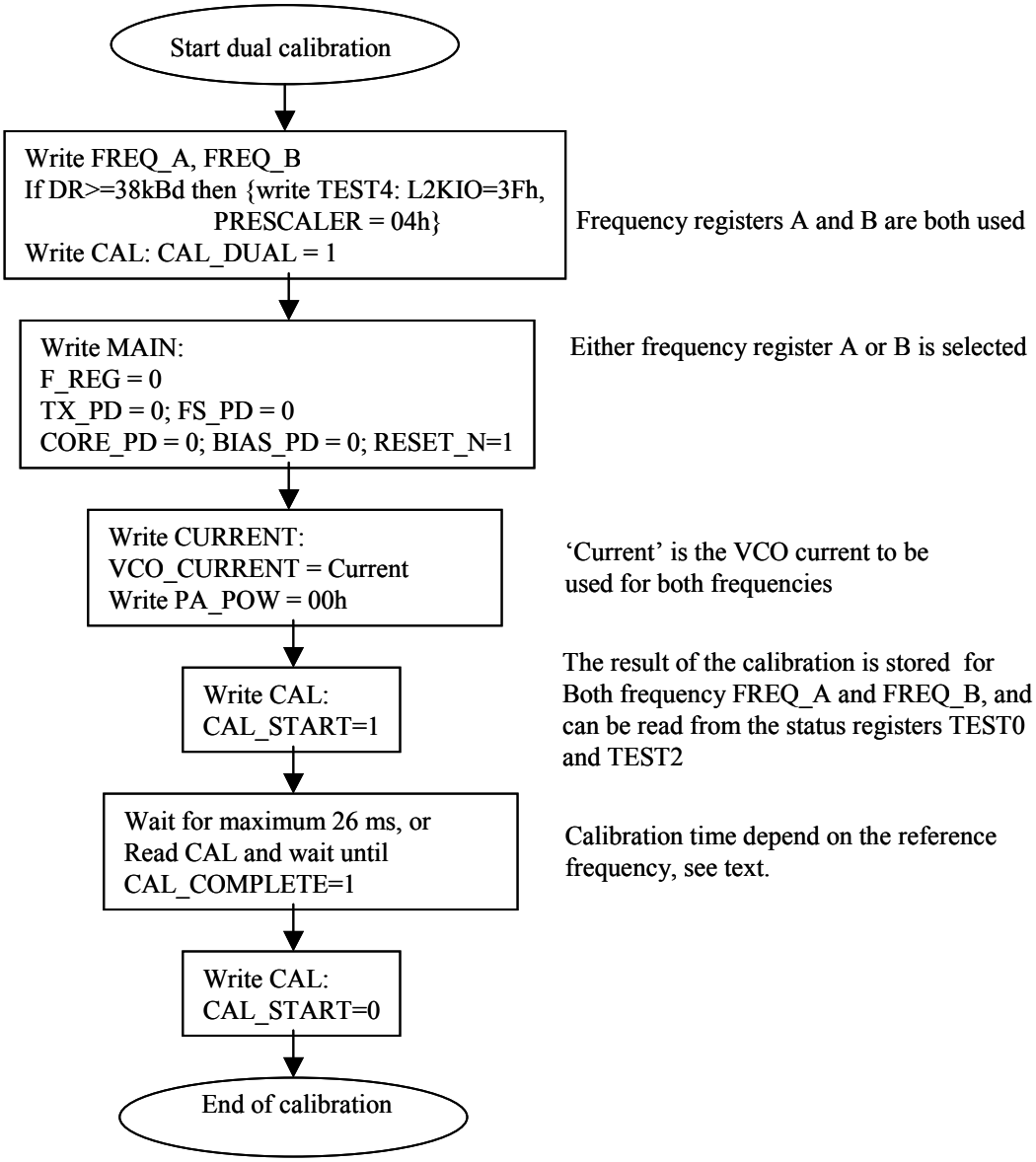

Figure 12. Dual calibration algorithm

Not Recommended for New Designs

VCO current control

The VCO current is programmable and should be set according to operating frequency and output power. Recommended settings for the *VCO_CURRENT* bits in the *CURRENT* register are shown in the tables on page 32.

The bias current for the PA buffers are also programmable. Recommended settings for the *PA_DRIVE* bits in the *CURRENT* register are shown in the tables on page 32.

Power management

CC1050 offers great flexibility for power management in order to meet strict power consumption requirements in battery operated applications. Power Down mode is controlled through the *MAIN* register. There are separate bits to control the TX part, the frequency synthesiser and the crystal oscillator. This individual control can be used to optimise for lowest possible current consumption in a certain application.

A typical power-on and initialising sequence for minimum power consumption is shown in Figure 13 and Figure 14.

PALE should be tri-stated or set to a high level during power down mode in order to prevent a trickle current from flowing in the internal pull-up resistor.

PA_POW should be set to 00h during power down mode to ensure lowest possible leakage current.

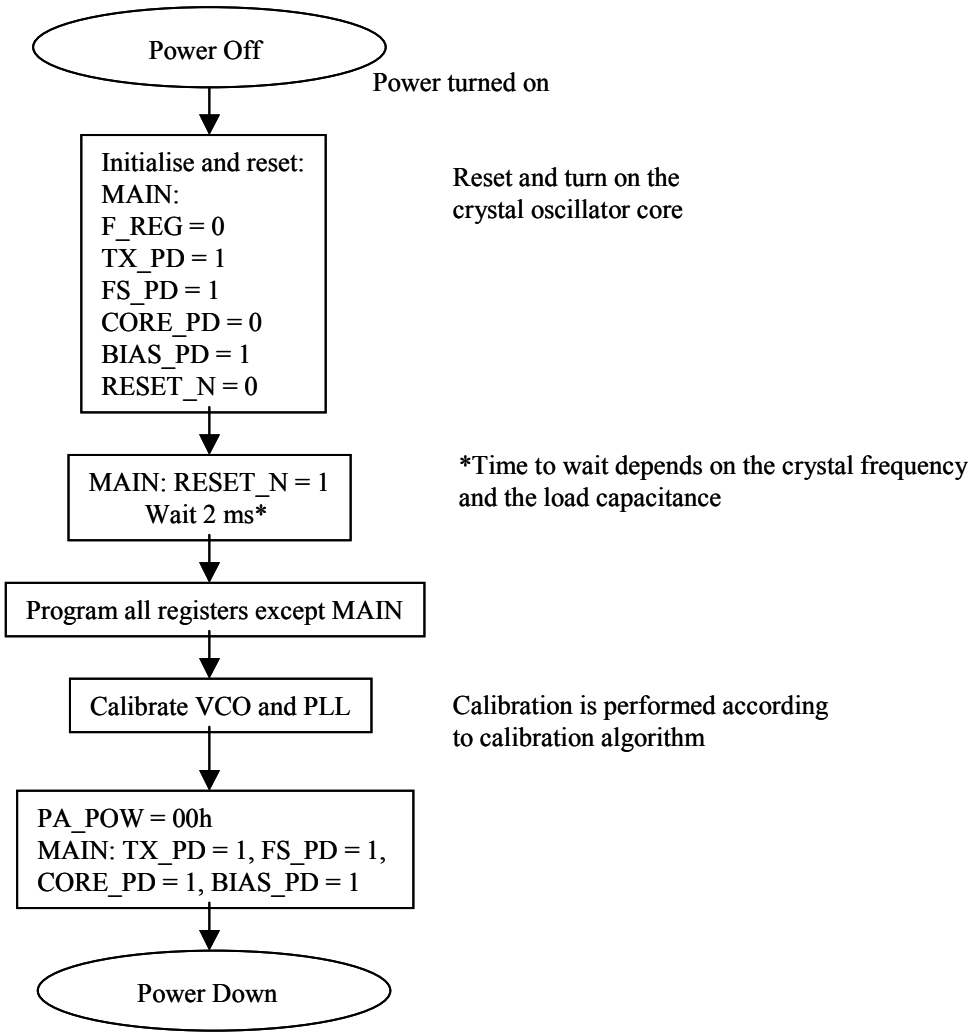

Figure 13. Initializing sequence

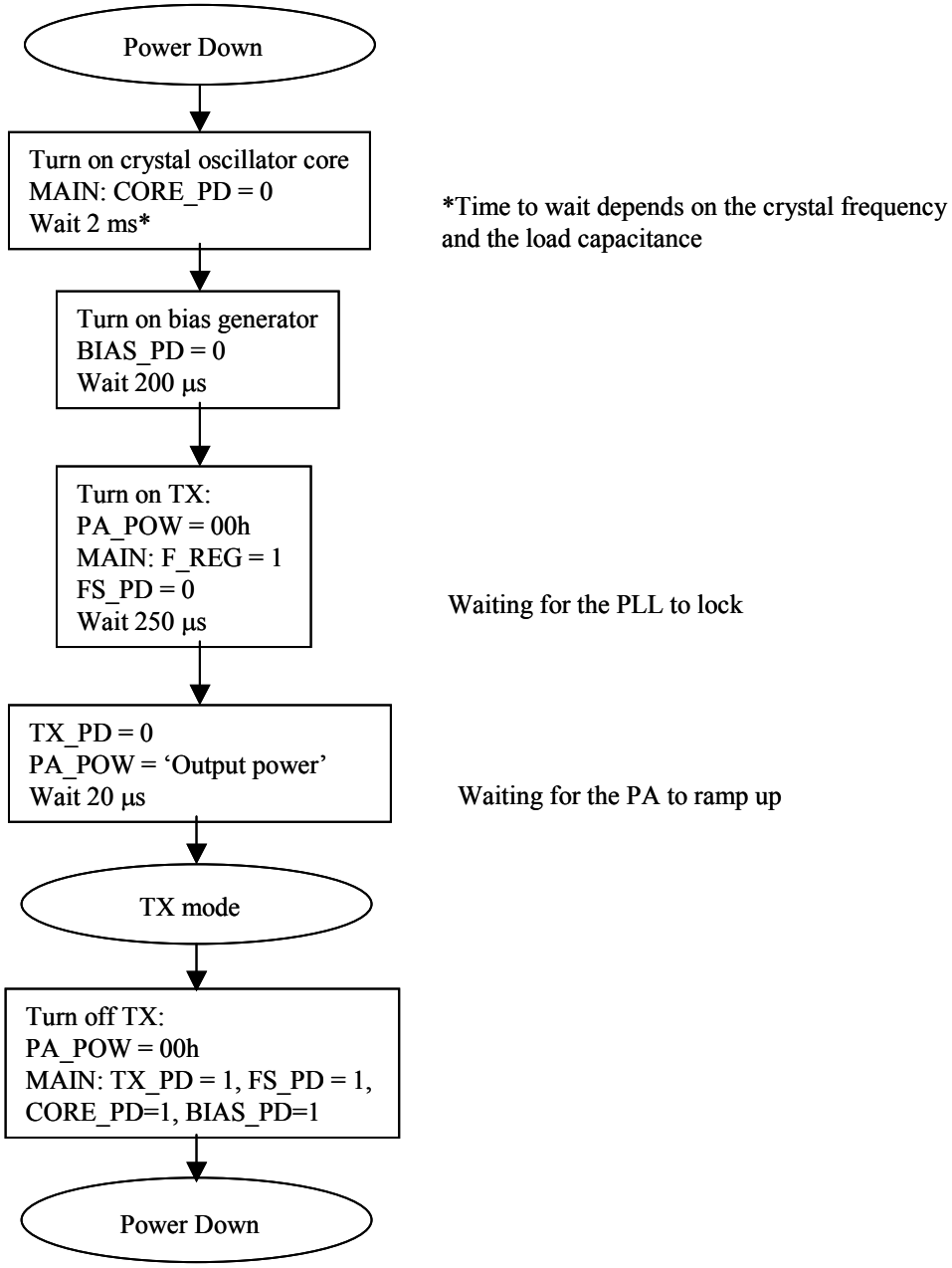

Figure 14. Sequence for activating TX mode

Output Matching

A few passive external components ensures match in TX mode. The matching network is shown in Figure 15. Component values for various frequencies are given in Table 1. Component values for other frequencies can be found using the configuration software.

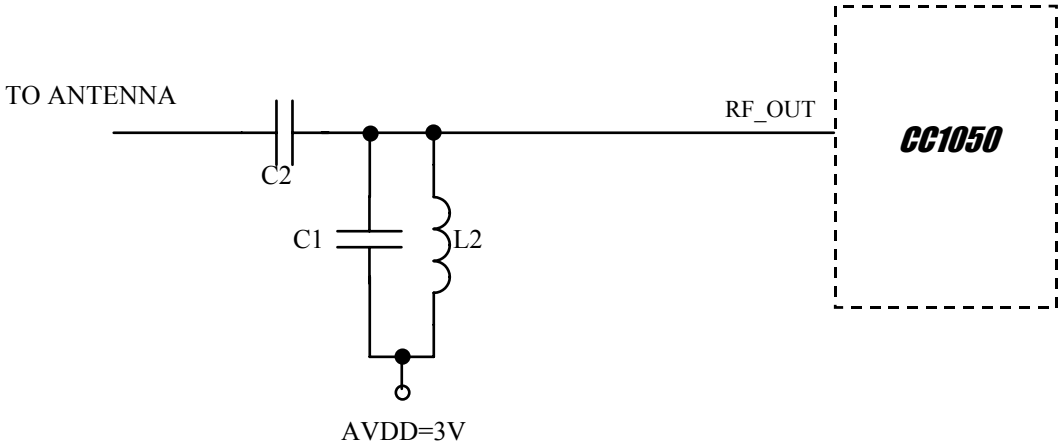

Figure 15. Output matching network

Output power programming

The RF output power is programmable and controlled by the PA_POW register.

Table 3 shows the closest programmable value for output powers in steps of 1 dB. The typical current consumption is also shown.

In power down mode the PA_POW should be set to 00h for minimum leakage current.

Output power [dBm]	RF frequency 433 MHz		RF frequency 868 MHz	
	PA_POW [hex]	Current consumption, typ. [mA]	PA_POW [hex]	Current consumption, typ. [mA]
-20	01	5.5	02	8.0
-19	01	5.5	02	8.0
-18	01	5.5	02	8.0
-17	02	5.7	03	8.3
-16	02	5.7	03	8.3
-15	02	5.7	04	8.5
-14	02	5.7	04	8.5
-13	03	6.0	05	8.7
-12	03	6.0	05	8.7
-11	04	6.2	06	8.9
-10	04	6.2	06	8.9
-9	05	6.5	07	9.1
-8	05	6.5	08	9.4
-7	06	6.8	09	9.6
-6	07	7.0	0A	9.8
-5	08	7.3	0B	10.0
-4	09	7.5	0D	10.4
-3	0A	7.8	0E	10.6
-2	0C	8.3	0F	10.9
-1	0D	8.5	40	13.4
0	0F	9.1	50	14.2
1	40	10.5	60	15.0
2	50	11.5	70	15.7
3	50	11.5	80	16.3
4	60	12.4	90	17.0
5	70	13.3	A0	17.7
6	80	14.7	C0	19.1
7	90	15.1	E0	20.0
8	A0	15.9	FF	24.9
9	C0	17.6		
10	E0	19.2		
11	F0	20.0		
12	FF	23.3		

Table 3. Output power settings and typical current consumption

Crystal oscillator

CC1050 has an advanced amplitude regulated crystal oscillator. A high current is used to start up the oscillations. When the amplitude builds up, the current is reduced to what is necessary to maintain a 600 mVpp amplitude. This ensures a fast start-up, keeps the current consumption as well as the drive level to a minimum and makes the oscillator insensitive to ESR variations.

An external clock signal or the internal crystal oscillator can be used as main frequency reference. An external clock signal should be connected to XOSC_Q1, while XOSC_Q2 should be left open. The *XOSC_BYPASS* bit in the *XOSC* register should be set when an external clock signal is used.

The crystal frequency should be in the range 3-4, 6-8 or 9-16 MHz. Because the crystal frequency is used as reference for the data rate (as well as other internal functions), the following frequencies are recommended: 3.6864, 7.3728, 11.0592 or 14.7456 MHz. These frequencies will give accurate data rates. The crystal frequency range is selected by *XOSC_FREQ1:0* in the *MODEM0* register.

To operate in synchronous mode at data rates different from the standards at 1.2, 2.4, 4.8 kBaud and so on, the crystal frequency can be scaled. The data rate (DR) will change proportionally to the new crystal frequency (f). To calculate the new crystal frequency:

$$f_{xtal_new} = f_{xtal} \frac{DR_{new}}{DR}$$

Using the internal crystal oscillator, the crystal must be connected between XOSC_Q1 and XOSC_Q2. The oscillator is designed for parallel mode operation of the crystal. In addition loading capacitors (C3 and C4) for the crystal are required. The loading capacitor values depend on the total load capacitance, C_L, specified for the crystal. The total load capacitance seen between the crystal terminals should equal C_L for the crystal to oscillate at the specified frequency.

$$C_L = \frac{1}{\frac{1}{C_3} + \frac{1}{C_4}} + C_{parasitic}$$

The parasitic capacitance is constituted by pin input capacitance and PCB stray capacitance. Typically the total parasitic capacitance is 8 pF. A trimming capacitor may be placed across C4 for initial tuning if necessary.

The crystal oscillator circuit is shown in Figure 16. Typical component values for different values of C_L are given in Table 4.

The initial tolerance, temperature drift, ageing and load pulling should be carefully specified in order to meet the required frequency accuracy in a certain application.

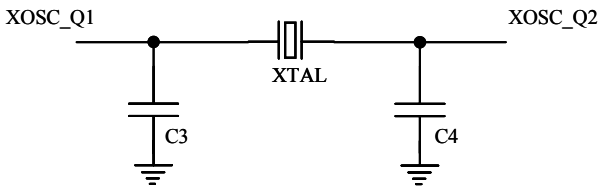

Figure 16. Crystal oscillator circuit

Item	C_L= 12 pF	C_L= 16 pF	C_L= 22 pF
C3	6.8 pF	15 pF	27 pF
C4	6.8 pF	15 pF	27 pF

Table 4. Crystal oscillator component values

Optional LC Filter

An optional LC filter may be added between the antenna and the matching network in certain applications. The filter will reduce the emission of harmonics.

A Pi-type filter topology is shown in Figure 17. Component values are given in Table 5. The filter is designed for 50 Ω terminations. The component values may have to be tuned to compensate for layout parasitics.

A T-Type LC filter can be used to further attenuate harmonics if the Pi-type filter is not sufficient. A T-type filter provides much better stop-band attenuation than a Pi-type filter due to improved insulation between input and output. For more details refer to Application Note *AN028 LC Filter with Improved High-Frequency Attenuation* available from the Chipcon web site.

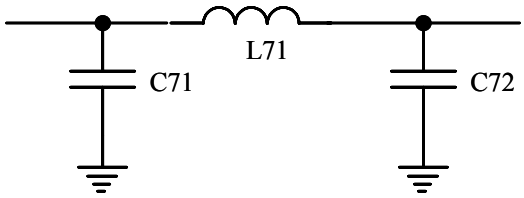

Figure 17. LC filter

Item	315 MHz	433 MHz	868 MHz	915 MHz
C71	30 pF	20 pF	10 pF	10 pF
C72	30 pF	20 pF	10 pF	10 pF
L71	15 nH	12 nH	5.6 nH	4.7 nH

Table 5. LC filter component values

System Considerations and Guidelines

SRD regulations
International regulations and national laws regulate the use of radio receivers and transmitters. SRDs (Short Range Devices) for licence free operation are allowed to operate in the 433 and 868-870 MHz bands in most European countries. In the United States such devices operate in the 260–470 and 902-928 MHz bands. **CC1050** is designed to meet the requirements for operation in all these bands. A summary of the most important aspects of these regulations can be found in Application Note *AN001 SRD regulations for licence free transceiver operation*, available from Chipcon's web site.

Low cost systems
In systems where low cost is of great importance the **CC1050** is the ideal choice. Very few external components keep the total cost at a minimum. The oscillator crystal can then be a low cost crystal with 50 ppm frequency tolerance.

Battery operated systems
In low power applications the power down mode should be used when not being active. Depending on the start-up time requirement, the oscillator core can be powered during power down. See page 21 for information on how effective power management can be implemented.

Crystal drift compensation
A unique feature in **CC1050** is the very fine frequency resolution of 250 Hz. This can be used to do the temperature compensation of the crystal if the temperature drift curve is known and a temperature sensor is included in the system. Even initial adjustment can be done using the frequency programmability. This eliminates the need for an expensive TCXO and trimming in some applications. In less demanding applications a crystal with low temperature drift and low ageing could be used without further compensation. A trimmer capacitor in the crystal oscillator circuit (in parallel with C4) could be used to set the initial frequency accurately.

High output power systems
The CHP_OUT (LOCK) pin can be configured to control an power amplifier. This is controlled by *LOCK_SELECT* in the *LOCK* register.

Frequency hopping spread spectrum systems
Due to the very fast frequency shift properties of the PLL, the **CC1050** is also suitable for frequency hopping systems. Hop rates of 1-100 hops/s are usually used depending on the bit rate and the amount of data to be sent during each transmission. The two frequency registers (*FREQ_A* and *FREQ_B*) are designed such that the 'next' frequency can be programmed while the 'present' frequency is used. The switching between the two frequencies is done through the *MAIN* register.

PCB Layout Recommendations

A two layer PCB is highly recommended. The bottom layer of the PCB should be the "ground-layer". Chipcon provide reference designs that should be followed in order to achieve the best performance.

The top layer should be used for signal routing, and the open areas should be filled with metallisation connected to ground using several vias.

The ground pins should be connected to ground as close as possible to the package pin using individual vias. The de-coupling capacitors should also be placed as close as possible to the supply pins and connected to the ground plane by separate vias.

The external components should be as small as possible and surface mount devices should be used.

Precaution should be used when placing the microcontroller in order to avoid interference with the RF circuitry.

In certain applications where the ground plane for the digital circuitry is expected to be noisy, the ground plane may be split in an analogue and a digital part. All AGND pins and AVDD de-coupling capacitors should be connected to the analogue ground plane. All DGND pins and DVDD de-coupling capacitors should be connected to the digital ground. The connection between the two ground planes should be implemented as a star connection with the power supply ground.

A development kit with a fully assembled PCB is available, and can be used as a guideline for layout.

Antenna Considerations

CC1050 can be used together with various types of antennas. The most common antennas for short range communication are monopole, helical and loop antennas.

Monopole antennas are resonant antennas with a length corresponding to one quarter of the electrical wavelength ($\lambda/4$). They are very easy to design and can be implemented simply as a "piece of wire" or even integrated into the PCB.

Non-resonant monopole antennas shorter than $\lambda/4$ can also be used, but at the expense of range. In size and cost critical applications such an antenna may very well be integrated into the PCB.

Helical antennas can be thought of as a combination of a monopole and a loop antenna. They are a good compromise in size critical applications. But helical antennas tend to be more difficult to optimise than the simple monopole.

Loop antennas are easy to integrate into the PCB, but are less effective due to difficult impedance matching because of their very low radiation resistance.

For low power applications the $\lambda/4$-monopole antenna is recommended giving the best range and because of its simplicity.

The length of the $\lambda/4$-monopole antenna is given by:

$$L = 7125 / f$$

where f is in MHz, giving the length in cm. An antenna for 869 MHz should be 8.2 cm, and 16.4 cm for 434 MHz.

The antenna should be connected as close as possible to the IC. If the antenna is located away from the input pin the antenna should be matched to the feeding transmission line (50 Ω).

For a more thorough primer on antennas, please refer to Application *Note AN003 SRD Antennas* available from Chipcon's web site.

Configuration registers

The configuration of *CC1050* is done by programming the 19 8-bit configuration registers. The configuration data based on selected system parameters are most easily found by using the SmartRF® Studio software. A complete description of the registers are given in the following tables. After a RESET is programmed all the registers have default values.

REGISTER OVERVIEW

ADDRESS	Byte Name	Description
00h	MAIN	MAIN Register
01h	FREQ_2A	Frequency Register 2A
02h	FREQ_1A	Frequency Register 1A
03h	FREQ_0A	Frequency Register 0A
04h	FREQ_2B	Frequency Register 2B
05h	FREQ_1B	Frequency Register 1B
06h	FREQ_0B	Frequency Register 0B
07h	FSEP1	Frequency Separation Register 1
08h	FSEP0	Frequency Separation Register 0
09h	CURRENT	Current Consumption Control Register
0Ah	XOSC	Crystal Oscillator Control Register
0Bh	PA_POW	PA Output Power Control Register
0Ch	PLL	PLL Control Register
0Dh	LOCK	LOCK Status Register and signal select to CHP_OUT (LOCK) pin
0Eh	CAL	VCO Calibration Control and Status Register
0Fh	Not used	Not used
10h	Not used	Not used
11h	MODEM0	Modem Control Register
12h	Not used	Not used
13h	FSCTRL	Frequency Synthesiser Control Register
14h		Reserved
15h		Reserved
16h		Reserved
17h		Reserved
18h		Reserved
19h		Reserved
1Ah		Reserved
1Bh		Reserved
1Ch	PRESCALER	Prescaler Control Register
40h	TEST6	Test register for PLL LOOP
41h	TEST5	Test register for PLL LOOP
42h	TEST4	Test register for PLL LOOP (must be updated as specified)
43h	TEST3	Test register for VCO
44h	TEST2	Test register for Calibration
45h	TEST1	Test register for Calibration
46h	TEST0	Test register for Calibration

MAIN Register (00h)

REGISTER	NAME	Default value	Active	Description
MAIN[7]	-	-	-	Not used
MAIN[6]	F_REG	-	-	Selection of Frequency Register, 0 : Register A, 1 : Register B
MAIN[5]	-	-	-	Not used
MAIN[4]	TX_PD	-	H	Power Down of Signal Interface and PA
MAIN[3]	FS_PD	-	H	Power Down of Frequency Synthesiser
MAIN[2]	CORE_PD	-	H	Power Down of Crystal Oscillator Core
MAIN[1]	BIAS_PD	-	H	Power Down of BIAS (Global_Current_Generator) and Crystal Oscillator Buffer
MAIN[0]	RESET_N	-	L	Reset, active low. Writing RESET_N low will write default values to all other registers than MAIN. Bits in MAIN do not have a default value, and will be written directly through the configurations interface. Must be set high to complete reset.

FREQ_2A Register (01h)

REGISTER	NAME	Default value	Active	Description
FREQ_2A[7:0]	FREQ_A[23:16]	01110101	-	8 MSB of frequency control word A

FREQ_1A Register (02h)

REGISTER	NAME	Default value	Active	Description
FREQ_1A[7:0]	FREQ_A[15:8]	10100000	-	Bit 15 to 8 of frequency control word A

FREQ_0A Register (03h)

REGISTER	NAME	Default value	Active	Description
FREQ_0A[7:0]	FREQ_A[7:0]	11001011	-	8 LSB of frequency control word A

FREQ_2B Register (04h)

REGISTER	NAME	Default value	Active	Description
FREQ_2B[7:0]	FREQ_B[23:16]	01110101	-	8 MSB of frequency control word B

FREQ_1B Register (05h)

REGISTER	NAME	Default value	Active	Description
FREQ_1B[7:0]	FREQ_B[15:8]	10100101	-	Bit 15 to 8 of frequency control word B

FREQ_0B Register (06h)

REGISTER	NAME	Default value	Active	Description
FREQ_0B[7:0]	FREQ_B[7:0]	01001110	-	8 LSB of frequency control word B

FSEP1 Register (07h)

REGISTER	NAME	Default value	Active	Description
FSEP1[7:3]	-	-	-	Not used
FSEP1[2:0]	FSEP_MSB[2:0]	000	-	3 MSB of frequency separation control

FSEP0 Register (08h)

REGISTER	NAME	Default value	Active	Description
FSEP0[7:0]	FSEP_LSB[7:0]	01011001	-	8 LSB of frequency separation control

CURRENT Register (09h)

REGISTER	NAME	Default value	Active	Description
CURRENT[7:4]	VCO_CURRENT[3:0]	1100	-	Control of current in VCO core 0000 : 160µA 0001 : 320µA 0010 : 480µA 0011 : 630µA 0100 : 790µA 0101 : 950µA 0110 : 1100µA 0111 : 1250µA 1000 : 1560µA, use for f< 500 MHz 1001 : 1720µA 1010 : 1870µA 1011 : 2030µA 1100 : 2180µA 1101 : 2340µA 1110 : 2490µA 1111 : 2640µA, use for f>500 MHz
CURRENT[3:2]	-	-		Not used
CURRENT[1:0]	PA_DRIVE[1:0]	10		Control of current in VCO buffer for PA 00 : 1mA 01 : 2mA, use for TX, f<500 MHz 10 : 3mA 11 : 4mA, use for TX, f>500 MHz

XOSC Register (0Ah)

REGISTER	NAME	Default value	Active	Description
XOSC[7:1]	-	-	-	Not used
XOSC[0]	XOSC_BYPASS	0	-	0 : Internal XOSC enabled 1 : Power-Down of XOSC, external CLK used

PA_POW Register (0Bh)

REGISTER	NAME	Default value	Active	Description
PA_POW[7:4]	PA_HIGHPOWER[3:0]	0000	-	Control of output power in high power array. Should be 0000 in PD mode . See Table 3 page 25 for details.
PA_POW[3:0]	PA_LOWPOWER[3:0]	1111	-	Control of output power in low power array Should be 0000 in PD mode. See Table 3 page 25 for details.

PLL Register (0Ch)

REGISTER	NAME	Default value	Active	Description
PLL[7]	EXT_FILTER	0	-	1 : External loop filter 0 : Internal loop filter 1-to-0 transition samples F_COMP comparator when BREAK_LOOP=1 (TEST3)
PLL[6:3]	REFDIV[3:0]	0010	-	Reference divider 0000 : Not allowed 0001 : Not allowed 0010 : Divide by 2 0011 : Divide by 3 ..... 1111 : Divide by 15
PLL[2]	ALARM_DISABLE	0	h	0 : Alarm function enabled 1 : Alarm function disabled
PLL[1]	ALARM_H	-	-	Status bit for tuning voltage out of range (too close to VDD)
PLL[0]	ALARM_L	-	-	Status bit for tuning voltage out of range (too close to GND)

LOCK Register (0Dh)

REGISTER	NAME	Default value	Active	Description
LOCK[7:4]	LOCK_SELECT[3:0]	0000	-	Selection of signals to CHP_OUT (LOCK) pin 0000 : Normal, pin can be used as CHP_OUT 0001 : LOCK_CONTINUOUS (active high) 0010 : LOCK_INSTANT (active high) 0011 : ALARM_H (active high) 0100 : ALARM_L (active high) 0101 : CAL_COMPLETE (active high) 0110 : Not used 0111 : REFERENCE_DIVIDER Output 1000 : TX_PDB (active high, activates external PA when TX_PD=0) 1001 : Not used 1010 : Not used 1011 : Not used 1100 : Not used 1101 : Not used 1110 : N_DIVIDER Output 1111 : F_COMP
LOCK[3]	PLL_LOCK_ ACCURACY	0	-	0 : Sets Lock Threshold = 127, Reset Lock Threshold = 111. Corresponds to a worst case accuracy of 0.7% 1 : Sets Lock Threshold = 31, Reset Lock Threshold =15. Corresponds to a worst case accuracy of 2.8%
LOCK[2]	PLL_LOCK_ LENGTH	0	-	0 : Normal PLL lock window 1 : Not used
LOCK[1]	LOCK_INSTANT	-	-	Status bit from Lock Detector
LOCK[0]	LOCK_CONTINUOUS	-	-	Status bit from Lock Detector

CAL Register (0Eh)

REGISTER	NAME	Default value	Active	Description
CAL[7]	CAL_START	0	↑	↑ 1 : Calibration started 0 : Calibration inactive CAL_START must be set to 0 after calibration is done
CAL[6]	CAL_DUAL	0	H	1 : Store calibration in both A and B 0 : Store calibration in A or B defined by MAIN[6]
CAL[5]	CAL_WAIT	0	H	1 : Normal Calibration Wait Time 0 : Half Calibration Wait Time The calibration time is proportional to the internal reference frequency. 2 MHz reference frequency gives 14 ms wait time.
CAL[4]	CAL_CURRENT	0	H	1 : Calibration Current Doubled 0 : Normal Calibration Current
CAL[3]	CAL_COMPLETE	0	H	Status bit defining that calibration is complete
CAL[2:0]	CAL_ITERATE	101	H	Iteration start value for calibration DAC 000 - 101: Not used 110 : Normal start value 111 : Not used

MODEM0 Register (11h)

REGISTER	NAME	Default value	Active	Description
MODEM0[7]	-	-	-	Not used
MODEM0[6:4]	BAUDRATE[2:0]	010	-	000 : 0.6 kBaud 001 : 1.2 kBaud 010 : 2.4 kBaud 011 : 4.8 kBaud 100 : 9.6 kBaud 101 : 19.2 kBaud 110 : 38.4 kBaud 111 : 76.8 kBaud
MODEM0[3:2]	DATA_FORMAT[1:0]	01	-	00 : NRZ operation. 01 : Manchester operation 10 : Transparent Asyncronous UART operation 11 : Not used
MODEM0[1:0]	XOSC_FREQ[1:0]	00	-	Selection of XTAL frequency range 00 : 3MHz - 4MHz crystal, 3.6864MHz recommended 01 : 6MHz - 8MHz crystal, 7.3728MHz recommended 10 : 9MHz - 12MHz crystal, 11.0592 MHz recommended 11 : 12MHz - 16MHz crystal, 14.7456MHz recommended

FSCTRL Register (13h)

REGISTER	NAME	Default value	Active	Description
FSCTRL[7:4]	-	-	-	Not used
FSCTRL[3:1]				Reserved
FSCTRL[0]	FS_RESET_N	1	L	Separate reset of frequency synthesizer

PRESCALER Register (1Ch)

REGISTER	NAME	Default value	Active	Description
PRESCALER[7:6]	PRE_SWING[1:0]	00	-	Prescaler swing. Fractions for PRE_CURRENT[1:0] = 00 00 : 1 * Nominal Swing 01 : 2/3 * Nominal Swing 10 : 7/3 * Nominal Swing 11 : 5/3 * Nominal Swing
PRESCALER[5:4]	PRE_CURRENT [1:0]	00	-	Prescaler current scaling 00 : 1 * Nominal Current 01 : 2/3 * Nominal Current 10 : 1/2 * Nominal Current 11 : 2/5 * Nominal Current
PRESCALER[3]	BYPASS_R	0	H	Bypass the resistor in the PLL loop filter 0 : Not bypassed 1 : Bypassed
PRESCALER[2]	DISCONNECT_C	0	-	Disconnect the capacitor in the PLL loop filter 0 : Capacitor connected 1 : Capacitor disconnected. Use for data rate 38.4 and 76.8 kBaud only.
PRESCALER[1:0]	-	-	-	Not used

TEST6 Register (for test only, 40h)

REGISTER	NAME	Default value	Active	Description
TEST6[7]	LOOPFILTER_TP1	0	-	1 : Select testpoint 1 to CHP_OUT 0 : CHP_OUT tied to GND
TEST6 [6]	LOOPFILTER_TP2	0	-	1 : Select testpoint 2 to CHP_OUT 0 : CHP_OUT tied to GND
TEST6 [5]	CHP_OVERRIDE	0	-	1 : use CHP_CO[4:0] value 0 : use calibrated value
TEST6[4:0]	CHP_CO[4:0]	10000	-	Charge_Pump Current DAC override value

TEST5 Register (for test only, 41h)

REGISTER	NAME	Default value	Active	Description
TEST5[7:6]	-	-	-	Not used
TEST5[5]	CHP_DISABLE	0	-	1 : CHP up and down pulses disabled 0 : normal operation
TEST5[4]	VCO_OVERRIDE	0	-	1 : use VCO_AO[3:0] value 0 : use calibrated value
TEST5[3:0]	VCO_AO[3:0]	1000	-	VCO_ARRAY override value

TEST4 Register (for test only, 42h)

REGISTER	NAME	Default value	Active	Description
TEST4[7:6]	-	-	-	Not used
TEST4[5:0]	L2KIO[5:0]	100101	h	Constant setting charge pump current scaling/rounding factor. Sets Bandwidth of PLL. Use 3Fh for 38.4 and 76.8 kBaud

TEST3 Register (for test only, 43h)

REGISTER	NAME	Default value	Active	Description
TEST3[7:5]	-	-	-	Not used
TEST3[4]	BREAK_LOOP	0	-	1 : PLL loop open 0 : PLL loop closed
TEST3[3:0]	CAL_DAC_OPEN	0100	-	Calibration DAC override value, active when BREAK_LOOP =1

TEST2 Register (for test only, 44h)

REGISTER	NAME	Default value	Active	Description
TEST2[7:5]	-	-	-	Not used
TEST2[4:0]	CHP_CURRENT [4:0]	-	-	Status vector defining applied CHP_CURRENT value

TEST1 Register (for test only, 45h)

REGISTER	NAME	Default value	Active	Description
TEST1[7:4]	-	-	-	Not used
TEST1[3:0]	CAL_DAC[3:0]	-	-	Status vector defining applied Calibration DAC value

TEST0 Register (for test only, 46h)

REGISTER	NAME	Default value	Active	Description
TEST0[7:4]	-	-	-	Not used
TEST0[3:0]	VCO_ARRAY[3:0]	-	-	Status vector defining applied VCO_ARRAY value

Package Description (TSSOP-24)

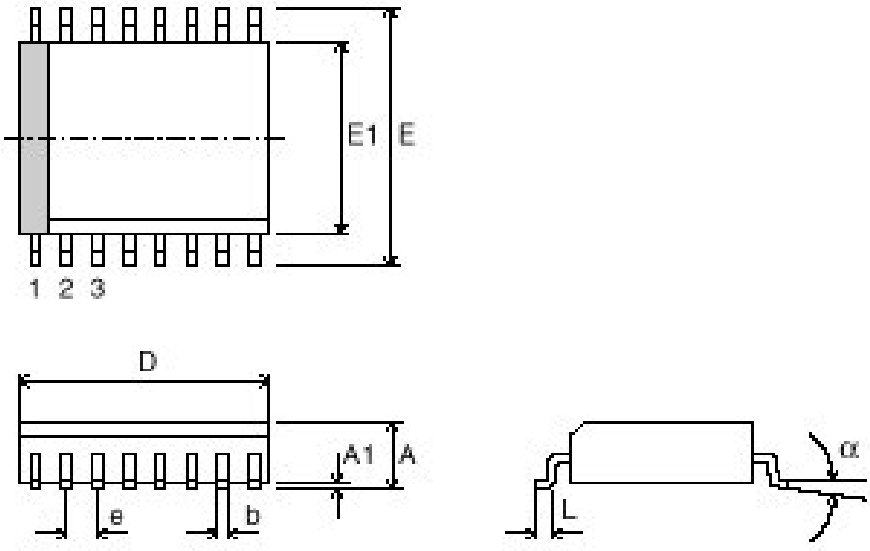

Note: The figure is an illustration only.

Thin Shrink Small Outline Package (TSSOP)											
		D	E1	E	A	A1	E	B	L	Copl.	α
TSSOP 24	Min	7.7	4.30	6.40		0.05	0.65	0.19	0.45		0°
	Max	7.9	4.50		1.20	0.15		0.30	0.75	0.10	8°
All dimensions in mm											

Soldering Information

Recommended soldering profile is according to IPC/JEDEC J-STD-020B, July 2002.

Plastic Tube Specification

TSSOP 4.4mm (.173") antistatic tube.

Tube Specification				
Package	Tube Width	Tube Height	Tube Length	Units per Tube
TSSOP 24	268 mil	80 mil	20"	62

Carrier Tape and Reel Specification

Carrier tape and reel is in accordance with EIA Specification 481.

Tape and Reel Specification					
Package	Tape Width	Component Pitch	Hole Pitch	Reel Diameter	Units per Reel
TSSOP 24	16 mm	8 mm	4 mm	13"	2500

Ordering Information

Ordering part number	Description	MOQ
CC1050	Single Chip RF Transceiver	62 (tube)
CC1050/T&R	Single Chip RF Transceiver	2500 (tape and reel)
CC1050DK-433	CC1050 Development Kit, 433 MHz	1
CC1050DK-868	CC1050 Development Kit, 868/915 MHz	1
CC1050SK	CC1050 Sample Kit (5 pcs)	1

MOQ = Minimum Order Quantity

General Information

Document Revision History

Revision	Date	Description/Changes
1.1	April 2004	Shaping feature removed L1 changed to 0603 size Crystal oscillator information added Preliminary version removed Minor corrections and editorial changes
1.2	August 2004	Application circuit and BOM simplified Description in the FSCTRL register changed KOA inductor removed in BOM Additional information on LC-filter

Disclaimer

Chipcon AS believes the information contained herein is correct and accurate at the time of this printing. However, Chipcon AS reserves the right to make changes to this product without notice. Chipcon AS does not assume any responsibility for the use of the described product; neither does it convey any license under its patent rights, or the rights of others. The latest updates are available at the Chipcon website or by contacting Chipcon directly.

To the extent possible, major changes of product specifications and functionality will be stated in product specific Errata Notes published at the Chipcon website. Customers are encouraged to sign up for the Developer's Newsletter for the most recent updates on products and support tools.

When a product is discontinued this will be done according to Chipcon's procedure for obsolete products as described in Chipcon's Quality Manual. This includes informing about last-time-buy options. The Quality Manual can be downloaded from Chipcon's website.

Trademarks

SmartRF® is a registered trademark of Chipcon AS. SmartRF® is Chipcon's RF technology platform with RF library cells, modules and design expertise. Based on SmartRF® technology Chipcon develops standard component RF circuits as well as full custom ASICs based on customer requirements and this technology.

All other trademarks, registered trademarks and product names are the sole property of their respective owners.

Life Support Policy

This Chipcon product is not designed for use in life support appliances, devices, or other systems where malfunction can reasonably be expected to result in significant personal injury to the user, or as a critical component in any life support device or system whose failure to perform can be reasonably expected to cause the failure of the life support device or system, or to affect its safety or effectiveness. Chipcon AS customers using or selling these products for use in such applications do so at their own risk and agree to fully indemnify Chipcon AS for any damages resulting from any improper use or sale.

© 2004, Chipcon AS. All rights reserved.

IMPORTANT NOTICE

Texas Instruments Incorporated and its subsidiaries (TI) reserve the right to make corrections, enhancements, improvements and other changes to its semiconductor products and services per JESD46, latest issue, and to discontinue any product or service per JESD48, latest issue. Buyers should obtain the latest relevant information before placing orders and should verify that such information is current and complete. All semiconductor products (also referred to herein as “components”) are sold subject to TI’s terms and conditions of sale supplied at the time of order acknowledgment.

TI warrants performance of its components to the specifications applicable at the time of sale, in accordance with the warranty in TI’s terms and conditions of sale of semiconductor products. Testing and other quality control techniques are used to the extent TI deems necessary to support this warranty. Except where mandated by applicable law, testing of all parameters of each component is not necessarily performed.

TI assumes no liability for applications assistance or the design of Buyers’ products. Buyers are responsible for their products and applications using TI components. To minimize the risks associated with Buyers’ products and applications, Buyers should provide adequate design and operating safeguards.

TI does not warrant or represent that any license, either express or implied, is granted under any patent right, copyright, mask work right, or other intellectual property right relating to any combination, machine, or process in which TI components or services are used. Information published by TI regarding third-party products or services does not constitute a license to use such products or services or a warranty or endorsement thereof. Use of such information may require a license from a third party under the patents or other intellectual property of the third party, or a license from TI under the patents or other intellectual property of TI.

Reproduction of significant portions of TI information in TI data books or data sheets is permissible only if reproduction is without alteration and is accompanied by all associated warranties, conditions, limitations, and notices. TI is not responsible or liable for such altered documentation. Information of third parties may be subject to additional restrictions.

Resale of TI components or services with statements different from or beyond the parameters stated by TI for that component or service voids all express and any implied warranties for the associated TI component or service and is an unfair and deceptive business practice. TI is not responsible or liable for any such statements.

Buyer acknowledges and agrees that it is solely responsible for compliance with all legal, regulatory and safety-related requirements concerning its products, and any use of TI components in its applications, notwithstanding any applications-related information or support that may be provided by TI. Buyer represents and agrees that it has all the necessary expertise to create and implement safeguards which anticipate dangerous consequences of failures, monitor failures and their consequences, lessen the likelihood of failures that might cause harm and take appropriate remedial actions. Buyer will fully indemnify TI and its representatives against any damages arising out of the use of any TI components in safety-critical applications.

In some cases, TI components may be promoted specifically to facilitate safety-related applications. With such components, TI’s goal is to help enable customers to design and create their own end-product solutions that meet applicable functional safety standards and requirements. Nonetheless, such components are subject to these terms.

No TI components are authorized for use in FDA Class III (or similar life-critical medical equipment) unless authorized officers of the parties have executed a special agreement specifically governing such use.

Only those TI components which TI has specifically designated as military grade or “enhanced plastic” are designed and intended for use in military/aerospace applications or environments. Buyer acknowledges and agrees that any military or aerospace use of TI components which have ***not*** been so designated is solely at the Buyer's risk, and that Buyer is solely responsible for compliance with all legal and regulatory requirements in connection with such use.

TI has specifically designated certain components as meeting ISO/TS16949 requirements, mainly for automotive use. In any case of use of non-designated products, TI will not be responsible for any failure to meet ISO/TS16949.

Products		**Applications**	
Audio	www.ti.com/audio	Automotive and Transportation	www.ti.com/automotive
Amplifiers	amplifier.ti.com	Communications and Telecom	www.ti.com/communications
Data Converters	dataconverter.ti.com	Computers and Peripherals	www.ti.com/computers
DLP® Products	www.dlp.com	Consumer Electronics	www.ti.com/consumer-apps
DSP	dsp.ti.com	Energy and Lighting	www.ti.com/energy
Clocks and Timers	www.ti.com/clocks	Industrial	www.ti.com/industrial
Interface	interface.ti.com	Medical	www.ti.com/medical
Logic	logic.ti.com	Security	www.ti.com/security
Power Mgmt	power.ti.com	Space, Avionics and Defense	www.ti.com/space-avionics-defense
Microcontrollers	microcontroller.ti.com	Video and Imaging	www.ti.com/video
RFID	www.ti-rfid.com		
OMAP Applications Processors	www.ti.com/omap	**TI E2E Community**	e2e.ti.com
Wireless Connectivity	www.ti.com/wirelessconnectivity		

Mailing Address: Texas Instruments, Post Office Box 655303, Dallas, Texas 75265
Copyright © 2013, Texas Instruments Incorporated

OCEAN CHIPS
Океан Электроники
Поставка электронных компонентов

Компания «Океан Электроники» предлагает заключение долгосрочных отношений при поставках импортных электронных компонентов на взаимовыгодных условиях!

Наши преимущества:

- Поставка оригинальных импортных электронных компонентов напрямую с производств Америки, Европы и Азии, а так же с крупнейших складов мира;
- Широкая линейка поставок активных и пассивных импортных электронных компонентов (более 30 млн. наименований);
- Поставка сложных, дефицитных, либо снятых с производства позиций;
- Оперативные сроки поставки под заказ (от 5 рабочих дней);
- Экспресс доставка в любую точку России;
- Помощь Конструкторского Отдела и консультации квалифицированных инженеров;
- Техническая поддержка проекта, помощь в подборе аналогов, поставка прототипов;
- Поставка электронных компонентов под контролем ВП;
- Система менеджмента качества сертифицирована по Международному стандарту ISO 9001;
- При необходимости вся продукция военного и аэрокосмического назначения проходит испытания и сертификацию в лаборатории (по согласованию с заказчиком);
- Поставка специализированных компонентов военного и аэрокосмического уровня качества (Xilinx, Altera, Analog Devices, Intersil, Interpoint, Microsemi, Actel, Aeroflex, Peregrine, VPT, Syfer, Eurofarad, Texas Instruments, MS Kennedy, Miteq, Cobham, E2V, MA-COM, Hittite, Mini-Circuits, General Dynamics и др.);

Компания «Океан Электроники» является официальным дистрибьютором и эксклюзивным представителем в России одного из крупнейших производителей разъемов военного и аэрокосмического назначения **«JONHON»**, а так же официальным дистрибьютором и эксклюзивным представителем в России производителя высокотехнологичных и надежных решений для передачи СВЧ сигналов **«FORSTAR»**.

AVIC JONHON

«JONHON» (основан в 1970 г.)

Разъемы специального, военного и аэрокосмического назначения:

(Применяются в военной, авиационной, аэрокосмической, морской, железнодорожной, горно- и нефтедобывающей отраслях промышленности)

«FORSTAR» (основан в 1998 г.)

ВЧ соединители, коаксиальные кабели, кабельные сборки и микроволновые компоненты:

(Применяются в телекоммуникациях гражданского и специального назначения, в средствах связи, РЛС, а так же военной, авиационной и аэрокосмической отраслях промышленности).

FORSTAR®

Телефон: 8 (812) 309-75-97 (многоканальный)
Факс: 8 (812) 320-03-32
Электронная почта: ocean@oceanchips.ru
Web: http://oceanchips.ru/
Адрес: 198099, г. Санкт-Петербург, ул. Калинина, д. 2, корп. 4, лит. А