2010

12-C3

Amphenol

Circular Interconnects

Products for Military, Aerospace and Harsh Environments

- Aluminum
- Stainless Steel/Firewall
- Composite
- Printed Circuit Board Connectors
- High Speed Connectors
- EMI Filter/Transient

* Fiber Optics

- Full Complement of Contacts
- Accessories

The Interconnection Leader

Amphenol Aerospace

About Amphenol® Aerospace

CONTACT US:

Amphenol Aerospace
40-60 Delaware Avenue
Sidney, NY 13838-1395

Customer Service: Mon.-Friday 8 am - 5 pm
Phone: (800)678-0141
Fax: (607)563-5157
Online: www.amphenol-aerospace.com

ABOUT AMPHENOL AEROSPACE:

Amphenol Aerospace, a Division of Amphenol Corporation, is one of the largest manufacturers of interconnect products in the world for the Military, Commercial Aerospace and Industrial markets. Amphenol designs, manufactures and markets circular and rectangular, electronic, fiber optic, EMI/EMP filter, and a variety of special applications connectors and interconnect systems.

Our 675,000 square foot facility is nestled at the foothills of the Catskill Mountains in Sidney NY. The Amphenol complex houses state-of-the-art manufacturing technologies including CNC machining, die-casting, molding, impact and extruding, plating, screw machining and process controls. Our fully equipped material evaluation lab and engineering organization, utilizing the latest in computer aided design software and analysis tools, allows us to design, test, and qualify interconnect systems.

Amphenol's interconnect products are supplied to thousands of OEMs worldwide and are supported by our worldwide sales and engineering force, including the largest global network of electronic distributors.

The Amphenol Aerospace Division consists of the interconnect facility in NY; two facilities in NH that manufacture electrical backplanes, rigid boards and flex assemblies; an interconnect facility in Toronto, Canada; and satellite assembly plants in Mexico and China.

AMPHENOL AEROSPACE'S PHILOSOPHY:

As a basic business philosophy, Amphenol Aerospace is dedicated to concentrating on those advanced and challenging market segments that demand an extraordinary level of supplier support and reaction. Our approach to implement this strategy is based on the following key principles:

FOCUS: Concentrate all resources on serving a limited number of tightly defined markets, and understanding the needs of those markets.

INNOVATION: Provide these markets new, creative solutions in both products and services.

RESPONSIVENESS: Identify and respond to the market and product needs more rapidly than any other supplier.

Performance is the sum of these principles. It is the measure of how well we continually and consistently implement our basic strategy and key principles.

CUSTOMIZED INTERCONNECT PACKAGES:

Amphenol Corporation's broad technical, product and manufacturing resources enable Amphenol Aerospace to provide exceptional performance in the area of customized system development-application specific packaging which blends both Corporate and Amphenol Aerospace products and design innovations. We provide customers with rapid, well engineered and cost-effective custom interconnect solutions.

QUALITY ASSURANCE:

Amphenol Aerospace has been awarded both AS9100 - Revision B and ISO9001:2000 quality assurance certifications.

MIL-DTL-38999 Series III, TV Tri-Start

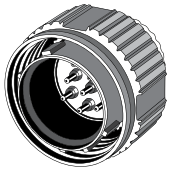

Pages
4-7 Shell & Insert Chart
8-14 Insert Arrangements
17-44 TV Section
89-108 Accessories, Contacts, and Tools

MIL-DTL-38999 Series II, JT

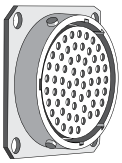

Pages
4-7 Shell & Insert Chart
8-14 Insert Patterns
45-66 JT Section
89-108 Accessories, Contacts, and Tools

MIL-DTL-38999 Series I, LJT

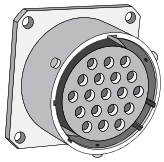

Pages
4-7 Shell & Insert Chart
8-14 Insert Patterns
67-80 LJT Section
89-108 Accessories, Contacts, and Tools

SJT

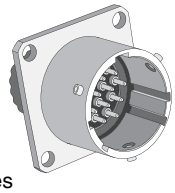

Pages
84 Shell & Insert Chart
8-12 Insert Arrangements
81-88 SJT Section
89-108 Accessories, Contacts, and Tools

MIL-DTL-26482 Matrix 2

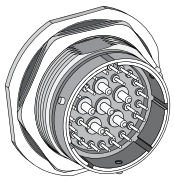

Pages
111 Shell & Insert Chart
112, 113 Insert Arrangements
116-118 Shell Styles
119 Accessories, Contacts, and Tools

MIL-DTL-83723 Matrix

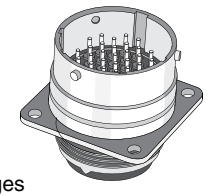

Pages
124 Shell & Insert Chart
125, 126 Insert Arrangements
128-135 Shell Styles
136 Accessories, Contacts, and Tools

MIL-DTL-83723 Pyle

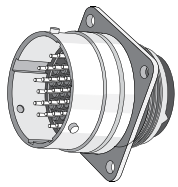

Pages
146 Shell & Insert Chart
147,148 Insert Arrangements
157-165 Shell Styles
166-169 Accessories, Contacts, and Tools

MIL-DTL-5015 Crimp Rear Release Matrix

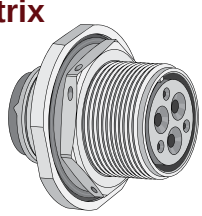

Pages
172-173 Shell & Insert Chart
174-182 Insert Patterns
186-192 Shell Styles
194-197 Accessories, Contacts, and Tools

MIL-DTL-26500 Pyle

Pages
203,204 Insert Patterns
209-223 Shell Styles
226-235 Accessories, Contacts, and Tools

Printed Circuit Board

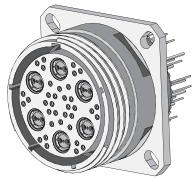

Pages
239 Shell & Insert Chart
241-255 Insert Arrangements
256-275 Shell Styles
276 Stand-off Adapter

EMI Filter Transient

Pages
282-285 Filter Data
288,289 How to Order
290-331 Shell Styles
332-338 Adapters, MOV, Diode, ESA and Specials

Fiber Optics

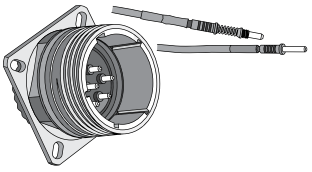

Pages
347 Shell & Insert Chart
348,349 Insert Patterns
350-360 Shell Styles
361-364 Accessories, Tools and Cable Systems

High Speed Contacts

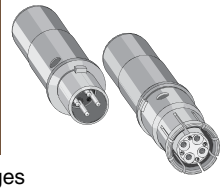

Pages
372-375 Cable Usage Guide
376 Overview
377-406 MIL-DTL-38999 Contacts
407-414 MIL-DTL-5015 & MIL-DTL-22992

Options Others

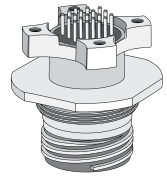

Pages
415-431 Additional Circulars
432-435 Additional Rectangular

Amphenol Aerospace
New, Featured Products

Amphenol has become the leader in interconnection products through its long history of engineering expertise for product solution solving. New and innovative solutions are under development every day within our highly skilled engineering departments who are teamed with marketing product managers and production specialists. They are always striving to meet new customer requirements in ever changing markets. The teams have a customer-driven approach to produce the end result: quality interconnect products that meet or exceed customer demands.

New/Featured

Breakaway Hybrid, Low Profile Lanyard Release Plug
Page 42

New Hybrid Lanyard Breakaway Fail Safe Connector with a composite thermoplastic outer operating sleeve for greater durability.

Solution: Navy F-18 program needed a break away plug that would have greater durability in weapons release application.

New/Featured

New HD38999 (High Density, Crimp) Plugs and receptacles
Page 43, 44

The HD38999 family of connectors was designed to work with existing Mil-specified 38999 shells. The HD38999 has 30% more contacts, it still performs to minimum electrical requirements of standard 38999 connectors.

Solution: 30% more contact density in 38999 Series III Shells

New/Featured

Matrix MIL-DTL-5015 with RADSOK® Contacts
Page 193

A special design of the Matrix MIL-DTL-5015, Series II connectors has added high amperage with the RADSOK® contacts in the plug instead of standard rear release crimp contacts.

Solution: Higher amperage capability in Matrix MIL-DTL-5015

New/Featured

Filter Connector with High Density Patterns
Page 289

New High Density Patterns are available in Filter 38999 connectors in standard Mil-Spec or filter length shells. They provide 30% more contact that standard insert arrangement patterns. See page 43 for ordering information.

Solution: Higher contact density and custom stand-off shell designs

New/Featured

ARINC 801 Connectors
Page 356

Designed for use in Amphenol ARINC 801 fiber optic connectors - manufactured to comply with ARINC 801. Genderless terminus allows for use on both sides of a connector.

Solution: Fiber Optic Termini & Connector that meet ARINC specifications

New/Featured

MT Ferrule Connectors
Page 359

Amphenol offers a multi-channel circular connector with high density MT fiber optics. High fiber density in a relatively small circular connector package with all the advantages of the MIL-DTL-38999 series III connector.

Solution: Higher Density Fiber Optics in MIL-DTL-38999

MIL-DTL-38999, Series I LJT, II JT, III TV
Insert Availability and Identification Chart

Series JT II	Series LJT I	Series TV III	Military TV III	JT/LJT Solder	Crimp	Hermetics Class H	Hermetics Class Y	Hermetics TV*	Service Rating	Total Contacts	Contact Size 22D	22M	22	20	16	12	12 (Coax)	10 (Power)	8 (Coax)	8†† (Twinax)
8-2■				P					M	2				2						
8-3■				X	NA	P	P		M	3				3						
	9-3■			X																
		9-5★■							Grounded	1										1
8-6				X	X	P	P		M	6		6								
	9-6			X	X	P	P													
	9-7■			X					M	7		7								
	9-22■			X					I	2				2						
8-35					X	P	P		M	6	6									
	9-35	9-35	A35		X	P	P	P												
8-44					X	P	P		M	4			4							
	9-44				X															
		9-94 ■			✦				M	2				2						
8-97■				X					M	4		2		2						
8-98				S	X	P	P		I	3				3						
	9-98	9-98	A98	X	X	P	P	P												
	11-2★	11-2★	B2		X	P**			I	2					2					
10-4					3				I	4				4						
	11-4	11-4		X	S/2															
10-5				X	X	P	P		I	5				5						
	11-5	11-5	B5	X	X			P												
	11-6■			S					I	6				6						
10-13				X	X	P/S	P/S		M	13		13								
	11-13			X	X	P/S	P/S													
10-35					X	P/S	P/S		M	13	13									
	11-35	11-35	B35		X	P/S	P/S	P												
		11-54 ■			X ✦				II	4	4									
10-98				X	X	P/S	P/S		I	6				6						
	11-98	11-98	B98	X	X	P/S	P/S	P												
10-99					X	P	P		I	7				7						
	11-99	11-99	B99		P X			P												
12-3				X	X ✦	P	P		II	3					3					
	13-3■				P															
12-4				X	X	P	P		I	4					4					
	13-4★	13-4★	C4	X	X	P	P	P												
12-8				X	X	P	P		I	8				8						
	13-8	13-8	C8	X	X	P	P	P												
		13-13■							I, Fiber Optic	4					2**	2				
12-22					X	P/S	P/S		M	22		22								
	13-22			X	X	P/S	P/S													
12-35					X	P/S	P/S		M	22	22									
	13-35	13-35	C35		X	P/S	P/S	P												
		13-63■			✦				I	4					2	2				
12-98				X	X	P/S	P/S		I	10				10						
	13-98	13-98	C98	X	X	P/S	P/S	P												
14-4■					2				I	4						4				
	15-4■	15-4■			2 ✦															
14-5				X	X	P	P		II	5					5					
	15-5★	15-5★	D5	X	X	P	P	P												
14-15				X	X	P	P		I	15				14	1					
	15-15	15-15	D15	X	X	P/S	P/S	P	I	15				14	1					

X Completely tooled.
• Majority of tooling is completed (contact Amphenol Aerospace for availability).
✦ Not tooled for 02-R.
P Available with Pin contacts only
S Available with Socket contacts only
P/S Available with Pin contacts or Socket contacts
★ Ground plane proprietary option available. Arrg. 9-5 is exclusively ground plane type.
■ Not Mil-Qualified.
✧ 21-75 is Mil-Qualified with twinax contacts only.
Note: MS connector 21-75 is supplied with size 8 twinax.
Commercial connector 21-75 is supplied with size 8 coax.

* Hermetic inserts - solder termination standard. (Contact Amphenol Aerospace for optional PCB or eyelet termination).
** Two size 16 contacts dedicated to fiber optics. See the Fiber Optic section for more information.
*** For use in MIL-STD-1760 applications (see pages 40 & 41).
† For RG 180/U and RG 195/U cables only.
†† Size 8 Coax and Twinax are interchangeable.
(2) Not Tooled for RP or 02RE
(3) Pin inserts only, not tooled for RP or 02RE (Consult Sidney, NY for avail.)
(5) MS Connector 21-79 has provision for two size 8 coax contacts. Coax contacts are not supplied unless specified by customer.

MIL-DTL-38999, Series I LJT, II JT, III TV
Insert Availability and Identification Chart

Amphenol Aerospace

Series	Series	Series	Military	JT/LJT		Hermetics					Contact Size									
JT II	LJT I	TV III	TV III	Solder	Crimp	Class H	Class Y	TV*	Service Rating	Total Contacts	22D	22M	22	20	16	12	12 (Coax)	10 (Power)	8 (Coax)	8†† (Twinax)
14-18				X	X	P/S	P/S		I	18				18						
	15-18	15-18	D18	X	X	P/S	P/S	P												
14-19■				X	X				I	19				19						
	15-19	15-19	D19		X	P	P	P												
14-35					X	P	P		M	37	37									
	15-35	15-35	D35		X	P/S	P/S	P												
14-37				X	X	P	P		M	37		37								
	15-37			X	X	P	P													
14-68■					2	P	P		1	8					8					
	15-68■			X	2															
14-97■					X	P	P		I	12				8	4					
	15-97	15-97	D97	X	X	P	P	P												
	17-2	17-2	E2		X ✦				M	39	38									1
16-6					X	P	P		I	6						6				
	17-6	17-6	E6		X	P	P	P												
16-8				X	X	P	P		II	8					8					
	17-8★	17-8★	E8	X	X	P/S	P/S	P												
16-13■					2				I	13					13					
	17-13■				2															
	17-22■	17-22★■			✦				Coax	4							2		2	
	17-25■				2				M	24	22								2	
16-26				X	X	P/S	P/S		I	26				26						
	17-26	17-26	E26	X	X	P/S	P/S	P												
16-35					X	P	P		M	55	55									
	17-35	17-35	E35	X	X	P	P	P												
16-42					X				M	42			42							
	17-42■				P															
		17-52■			X ✦				M	2										2
16-55				X	X	P/S	P/S		M	55		55								
	17-55			X	X	P/S	P/S													
		17-60■			X				I/Coax	10	8								2	
16-99				X	X	P	P		I	23				21	2					
	17-99	17-99	E99	X	X	P	P													
		19-AD■			X ✦				Inst.	17				16						1
18-11				X	X	P	P		II	11					11					
	19-11★	19-11★	F11	X	X	P	P	P												
	19-18	19-18	F18		2 X				M	18	14									4
18-28				X	X				I	28				26	2					
	19-28■	19-28	F28	X	P X															
18-30				X	X				I	30				29	1					
	19-30■			X	P															
		19-31 ■			X				M	15	12					1			2	
18-32				X	X	P/S	P/S		I	32				32						
	19-32	19-32	F32	X	X	P/S	P/S	P												
18-35					X	P	P		M	66	66									
	19-35	19-35	F35		X	P	P	P												
18-53				X	X				M	53			53							
	19-53■				P															
18-66				X	X	P	P		M	66		66								
	19-66				X	P	P													
	19-67■			X	3	S	S		M	67		67								
18-68■					2				I	18					18					
	19-68■				3															
18-96■					2				I	9						9				
20-1					X	P	P		M	79		79								
	21-1				X	P/S	P/S													
20-2					X				M	65			65							
	21-2■				X															
20-11■					3				I	11						11				
	21-11★	21-11★	G11		X															

MIL-DTL-38999, Series I LJT, II JT, III TV
Insert Availability and Identification Chart

Series JT II	Series LJT I	Series TV III	Military TV III	JT/LJT Solder	Crimp	Hermetics H	Hermetics Y	Hermetics TV*	Service Rating	Total Contacts	Contact Size 22D	22M	22	20	16	12	12 (Coax)	10 (Power)	8 (Coax)	8†† (Twinax)
20-16				X	X	P/S	P/S		II	16					16					
	21-16★	21-16★	G16	X	X	P	P	P												
	21-25■			X					I	25				25						
	21-27■			X					I	27				27						
		21-29 ■			X				I	27				19	4	4				
20-35					X	P	P		M	79	79									
	21-35	21-35	G35		X	P/S	P/S	P												
20-39				X	X	P	P		I	39				37	2					
	21-39	21-39	G39	X	X	P	P	P												
20-41				X	X	P	P		I	41				41						
	21-41	21-41	G41	X	X	P/S	P/S	P												
	21-75★	21-75★✧	G75		2 X				N M	4									4	(4)
	21-79■	21-79 ■			2 X				II	19	17								2	(5)
22-1					X	P/S	P/S		M	100		100								
	23-1				X	P	P													
22-2				X	X	P	P		M	85			85							
	23-2			X	X	P	P													
	23-6★■	23-6★■			P				M	6										6
22-14■					2 ✦				I	14						14				
	23-14■	23-14 ■			2 ✦															
22-21				X	X	P	P		II	21					21					
	23-21★	23-21★	H21	X	X	P	P	P												
22-32				X	X	P	P		I	32				32						
	23-32■			X	P															
	23-34■			X					I	34				34						
22-35					X	P/S	P/S		M	100	100									
	23-35	23-35	H35		X	P	P	P												
22-53■					P				I	53				53						
	23-53	23-53	H53	X	X	P/S	P/S	P												
		23-54 ■			X				M	53	40				9	4				
22-55				X	X	P	P		I	55				55						
	23-55	23-55	H55		X			P												
	23-97■			X					II	16					16					
	23-99■			X					II	11					11					
24-1					X	P	P		M	128		128								
	25-1				X	P	P													
24-2					X				M	100			100							
	25-2				X															
24-4					X	P	P		I	56				48	8					
	25-4	25-4	J4		X			P												
	25-7■	25-7	J7		X				M Twinax	99	97								2	
		25-8★	J8		✦				Twinax	8										8
		25-11***	J11		2 ✦				N	11				2				9		
		25-17 ■			✦				M	42	36									6
24-19■					X	P	P		I	19						19				
	25-19★	25-19★	J19		X			P												
	25-20■	25-20***	J20		2 ✦				N	30				10	13		4			3
24-24					X	P	P		I	24					12	12				
	25-24★	25-24★	J24		X	P	P													
		25-26 ■			✦				I	25				16		5			4	
24-29					X				I	29					29					
	25-29★	25-29★	J29	X	X															

X Completely tooled.
• Majority of tooling is completed (contact Amphenol Aerospace for availability).
✦ Not tooled for 02-R.
P Available with Pin contacts only
S Available with Socket contacts only
P/S Available with Pin contacts or Socket contacts
★ Ground plane proprietary option available. Arrg. 9-5 is exclusively ground plane type.
■ Not Mil-Qualified.
✧ 21-75 is Mil-Qualified with twinax contacts only.
* Hermetic inserts - solder termination standard. (Contact Amphenol Aerospace for optional PCB or eyelet termination).
** Two size 16 contacts dedicated to fiber optics. See the Fiber Optic Section for more information.
*** For use in MIL-STD-1760 applications (see pages 40 & 41).
† For RG 180/U and RG 195/U cables only.
†† Size 8 Coax and Twinax are interchangeable.
(2) Not Tooled for RP or 02RE
(3) Pin inserts only, not tooled for RP or 02RE (Consult Sidney, NY for avail.)
(4) MS connector 21-75 is supplied with size 8 twinax. Commercial connector 21-75 is supplied with size 8 coax.
(5) MS Connector 21-79 has provision for two size 8 coax contacts. Coax contacts are not supplied unless specified by customer.

Amphenol Aerospace

Series JT II	Series LJT I	Series TV III	Military TV III	JT/LJT Solder	Crimp	Hermetics H	Hermetics Y	Hermetics TV*	Service Rating	Total Contacts	Contact Size 22D	22M	22	20	16	12	12 (Coax)	10 (Power)	8 (Coax)	8†† (Twinax)	8 Quadrax
24-35					X	P	P		New	128	128										
	25-35	25-35	J35		X	P	P	P	M												
24-37					X				I	37					37						
	25-37★	25-37★	J37		X																
24-43■					3				I	43				23	20						
	25-43	25-43	J43	X	2 ✦																
	25-46	25-46	J46		2 ✦				I	46				40	4				2		
24-61				X	X	P	P		I	61				61							
	25-61	25-61	J61	X	X	P	P	P													
		25-62■			X ✦				I	12					8						4
		25-90	J90		✦				I	46				40	4					2	
		25-F4 ■			X				M/I	66	49				13	4					

X Completely tooled.
✦ Not tooled for 02-R.
P Pin inserts only (contact Amphenol Aerospace for socket availability).
★ Ground plane proprietary option available. Arrg. 9-5 is exclusively ground plane type.
■ Not Mil-Qualified.

TV Series III

Select Shell Size - Special Insert Arrangement

(Not Mil-Spec Qualified)

Shell Size-Insert Arrg.	Crimp	Hermetics*	Service Rating	Total Contacts	Comments	Contact Size 22D	20	16	12
9-2	X		I	2	Formerly Pyle		2		
15-4	X		II	4	Formerly Pyle			4	
15-25	X		M	25	Formerly Pyle	22		3	
17-20	X		M	20	Formerly Pyle		16	4	
21-12	X		I	12	Formerly Pyle		3		9
21-21	X		M/Inst.	41	Improved sealing	32			9
21-99	X		M	16	Formerly Pyle	5			11
25-92	X		M	101	Formerly Pyle	92		9	
25-97	X		M	42	Formerly Pyle	26		3	13

Select Non-Standard Shell Size

- Special Insert Arrangement

Shell Size-Insert Arrg.	Crimp	Hermetics*	Service Rating	Total Contacts	Contact Size 20	8	4	0
25-16	X		M	8	6		2	
25L-3	X		II	3		1	2	
25L-7	X		II	7		7		
33-3	X		II	3			1	2
33-5	X		II	5			5	
33-6	X		II	6		2	4	
37-5	X		II	4				4

(Insert arrangements requiring non-standard shells or larger contacts)

X Completely tooled.
• Majority of tooling is completed (contact Amphenol Aerospace for availability).
✦ Not tooled for 02-R.
P Pin inserts only (contact Amphenol Aerospace for socket availability).
★ Ground plane proprietary option available. Arrangement 9-5 is exclusively ground plane type.
■ Not Mil-Qualified.
* Hermetic inserts - solder termination standard. (Contact Amphenol Aerospace for optional PCB or eyelet termination).
** Two size 16 contacts dedicated to fiber optics. See the Fiber Optic section for more information.
*** For use in MIL-STD-1760 applications (pgs. 40 & 41).
† For RG 180/U and RG 195/U cables only.
†† Size 8 Coax and Twinax are interchangeable.
Note: 25L-3 and 25L-7 require longer shells.

Front face of pin inserts illustrated

Shell Size & Insert Arrg. for:											
Series II JT	8-2	8-3		8-6			8-35	8-44		8-97	8-98
Series I LJT		9-3		9-6	9-7	9-22	9-35	9-44			9-98
Series III TV			9-5				9-35		9-94		9-98
Service Rating	M	M	Grounded	M	M	I	M	M	M	M	I
Number of Contacts	2	3	1	6	7	2	6	4	2	2 2	3
Contact Size	20	20	8 Twinax	22M	22M	20	22D	22	20	22M 20	20

Shell Size & Insert Arrg. for:										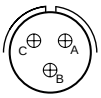
Series II JT		10-4	10-5		10-13	10-35		10-98	10-99	12-3
Series I LJT	11-2	11-4	11-5	11-6	11-13	11-35		11-98	11-99	13-3
Series III TV	11-2	11-4	11-5			11-35	11-54	11-98	11-99	
Service Rating	I	I	I	I	M	M	II	I	I	II
Number of Contacts	2	4	5	6	13	13	4	6	7	3
Contact Size	16	20	20	20	22M	22D	22D	20	20	16

Shell Size & Insert Arrg. for:	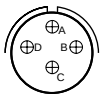	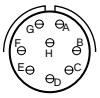			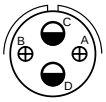	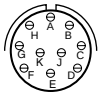	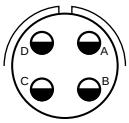	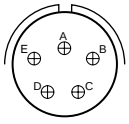	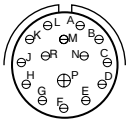
Series II JT	12-4	12-8	12-22	12-35		12-98	14-4	14-5	14-15
Series I LJT	13-4	13-8	13-22	13-35		13-98	15-4	15-5	15-15
Series III TV	13-4	13-8		13-35	13-63	13-98	15-4	15-5	15-15
Service Rating	I	I	M	M	I	I	I	II	I
Number of Contacts	4	8	22	22	2 2	10	4	5	14 1
Contact Size	16	20	22M	22D	16 12	20	12	16	20 16

Shell Size & Insert Arrg. for:	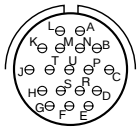	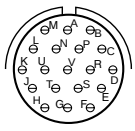	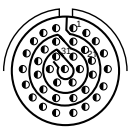	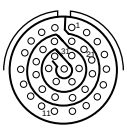	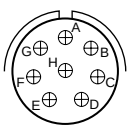	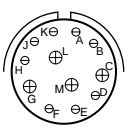	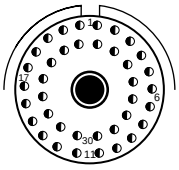
Series II JT	14-18	14-19	14-35	14-37	14-68	14-97	
Series I LJT	15-18	15-19	15-35	15-37	15-68	15-97	17-2
Series III TV	15-18	15-19	15-35			15-97	17-2
Service Rating	I	I	M	M	I	I	M
Number of Contacts	18	19	37	37	8	8 4	38 1
Contact Size	20	20	22D	22M	16	20 16	22D 8 Twinax

Shell Size & Insert Arrg. for:	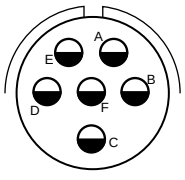	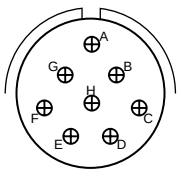	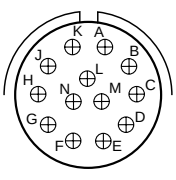	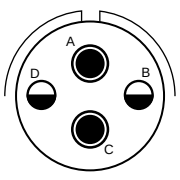	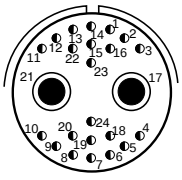	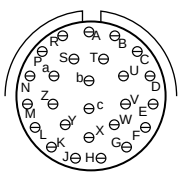
Series II JT	16-6	16-8	16-13			16-26
Series I LJT	17-6	17-8	17-13	17-22	17-25	17-26
Series III TV	17-6	17-8		17-22		17-26
Service Rating	I	II	I	Coax	M	I
Number of Contacts	6	8	13	2 2	22 2	26
Contact Size	12	16	16	12 Coax 8 Coax	22D 8 Coax	20

CONTACT LEGEND 8 10 12 16 20 22 22M 22D

Front face of pin inserts illustrated

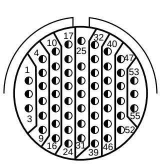
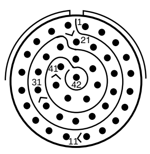
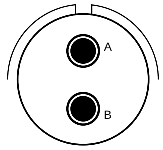
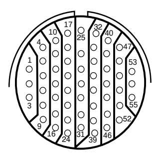
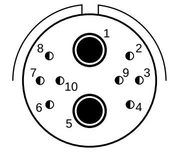
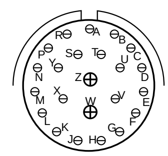
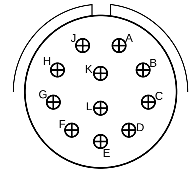

Shell Size & Insert Arrg. for:									
Series II JT	16-35	16-42		16-55			16-99		18-11
Series I LJT	17-35	17-42		17-55			17-99		19-11
Series III TV	17-35		17-52		17-60		17-99		19-11
Service Rating	M	M	M	M	I/Coax		I		II
Number of Contacts	55	42	2	55	8	2	21	2	11
Contact Size	22D	22	8 Twinax	22M	22D	8 Coax	20	16	16

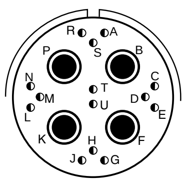
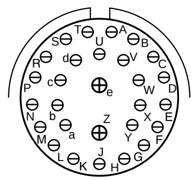
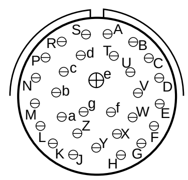
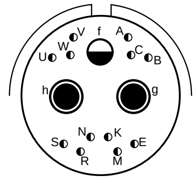
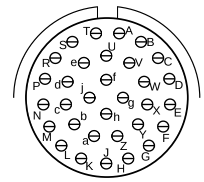
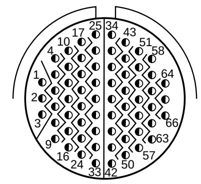

Shell Size & Insert Arrg. for:											
Series II JT			18-28		18-30					18-32	18-35
Series I LJT	19-18		19-28		19-30					19-32	19-35
Series III TV	19-18		19-28					19-31		19-32	19-35
Service Rating	M		M		I			M		I	M
Number of Contacts	14	4	26	2	29	1	2	1	12	32	66
Contact Size	22D	8 Twinax	20	18	20	16	8 Coax	12	22D	20	22D

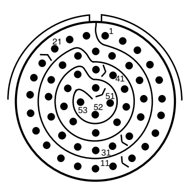
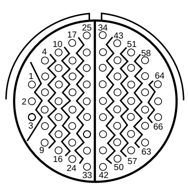
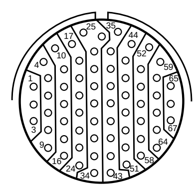
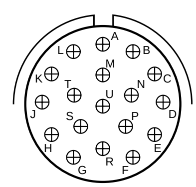
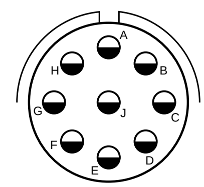

Shell Size & Insert Arrg. for:					
Series II JT	18-53	18-66		18-68	18-96
Series I LJT	19-53	19-66	19-67	19-68	
Series III TV					
Service Rating	M	M	M	I	I
Number of Contacts	53	66	67	18	9
Contact Size	22	22M	22M	16	12

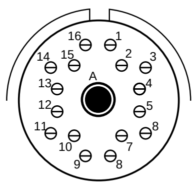
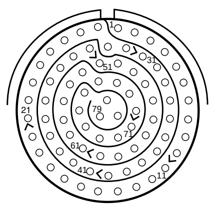
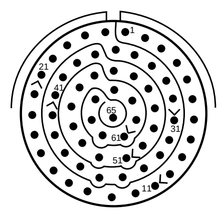
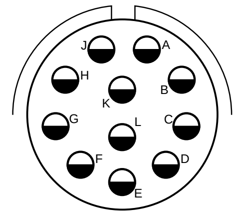
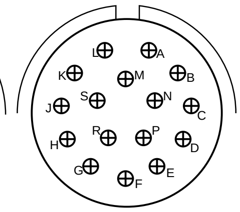

Shell Size & Insert Arrg. for:						
Series II JT			20-1	20-2	20-11	20-16
Series I LJT			21-1	21-2	21-11	21-16
Series III TV	19-AD				21-11	21-16
Service Rating	Inst.		M	M	I	II
Number of Contacts	16	1	79	65	11	16
Contact Size	20	8 Twinax	22M	22	12	16

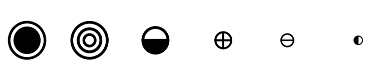

CONTACT LEGEND 8 10 12 16 20 22D

Front face of pin inserts illustrated

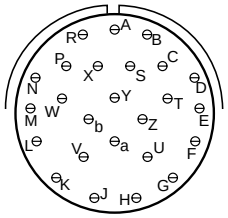
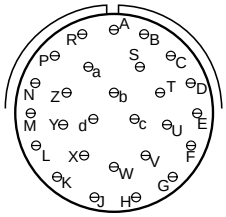
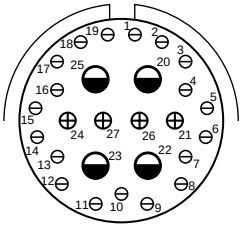
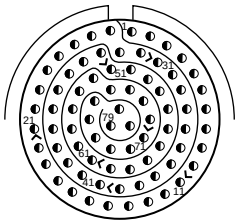

Shell Size & Insert Arrg. for:				
Series II JT				20-35
Series I LJT	21-25	21-27		21-35
Series III TV			21-29	21-35
Service Rating	I	I	I	M
Number of Contacts	25	27	19 4 4	79
Contact Size	20	20	20 16 12	22D

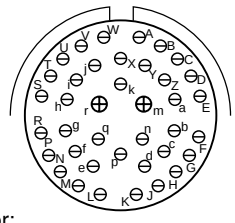
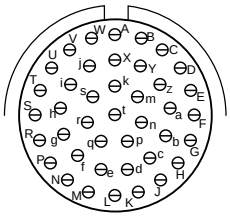
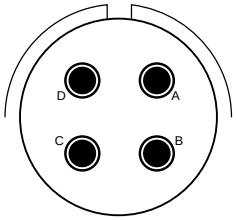
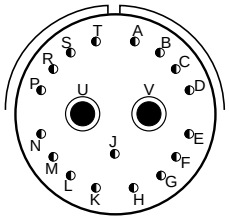
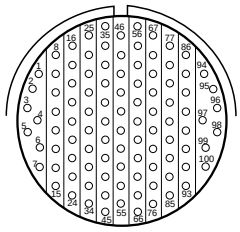

Shell Size & Insert Arrg. for:					
Series II JT	20-39	20-41			22-1
Series I LJT	21-39	21-41	21-75	21-79	23-1
Series III TV	21-39	21-41	21-75	21-79	
Service Rating	I	I	N	II	M
Number of Contacts	37 2	41	4	17 (See Note)	100
Contact Size	20 16	20	(See Note)	22D	22M

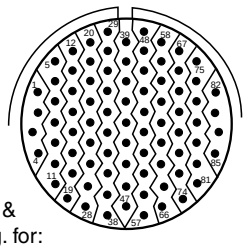
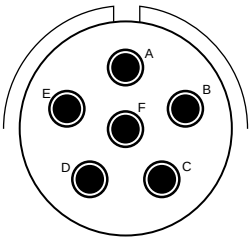
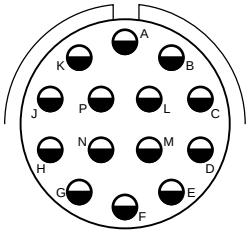
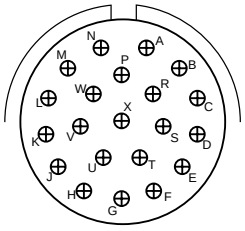
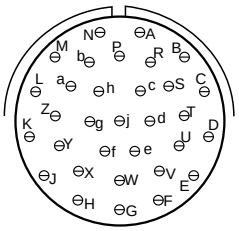

Shell Size & Insert Arrg. for:					
Series II JT	22-2		22-14	22-21	22-32
Series I LJT	23-2	23-6	23-14	23-21	23-32
Series III TV		23-6	23-14	23-21	
Service Rating	M	M	I	II	I
Number of Contacts	85	6	14	21	32
Contact Size	22	8 Twinax	12	16	20

Note: MS connector 21-75 is supplied with four size 8 twinax contacts.
Commercial connector 21-75 is supplied with four size 8 coax contacts.
MS connector 21-79 has provision for two size 8 coax contacts.
Coax contacts are not supplied unless specified by customers.

CONTACT LEGEND	8	10	12	16	20	22D

Front face of pin inserts illustrated

Shell Size & Insert Arrg. for:

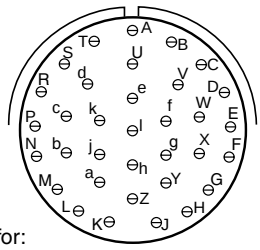
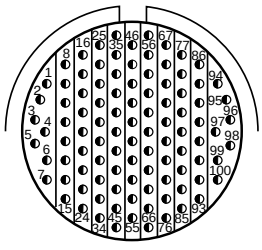
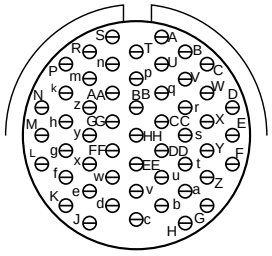
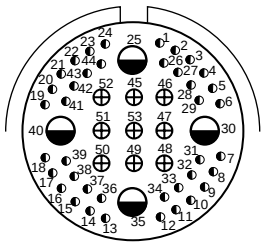

Series II JT		22-35	22-53	
Series I LJT	23-34	23-35	23-53	
Series III TV		23-35	23-53	23-54
Service Rating	I	M	I	M
Number of Contacts	34	100	53	40 9 4
Contact Size	20	22D	20	22D 16 12

Shell Size & Insert Arrg. for:

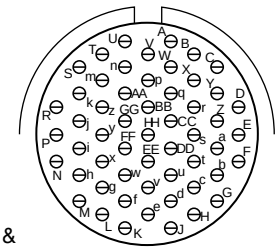
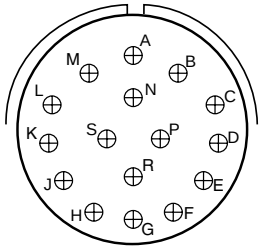
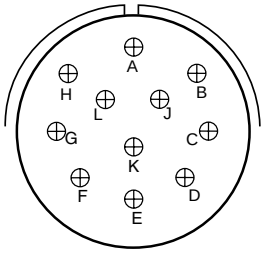
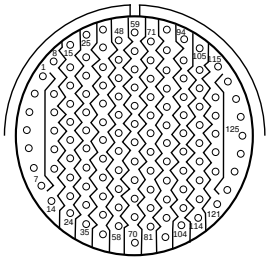

Series II JT	22-55			24-1
Series I LJT	23-55	23-97	23-99	25-1
Series III TV	23-55			
Service Rating	I	II	II	M
Number of Contacts	55	16	11	128
Contact Size	20	16	16	22M

Shell Size & Insert Arrg. for:

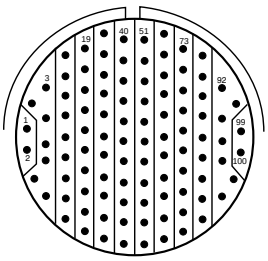
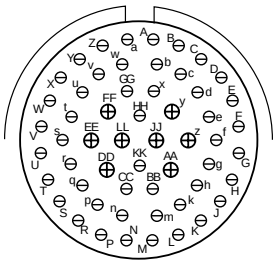
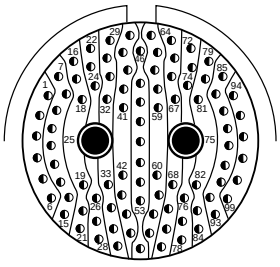
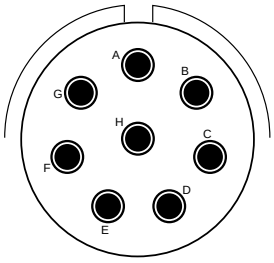

Series II JT	24-2	24-4		
Series I LJT	25-2	25-4	25-7	
Series III TV		25-4	25-7	25-8
Service Rating	M	I	M	Twinax
Number of Contacts	100	48 8	97 2	8
Contact Size	22	20 16	22D 8 Twinax	8 Twinax

*** For use in MIL-STD-1760 applications (see pages 40 and 41).

CONTACT LEGEND	8	10	12	16	20	22D

Front face of pin inserts illustrated

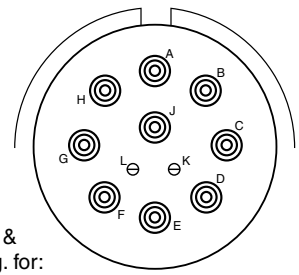

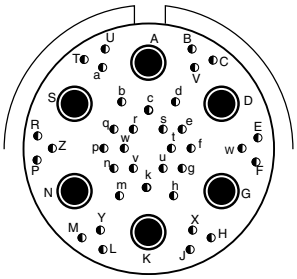

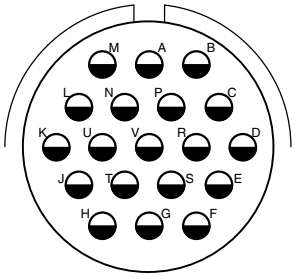

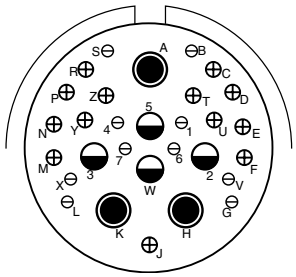

Shell Size & Insert Arrg. for:

Series II JT							24-19							
Series I LJT	25-11						25-19				25-20			
Series III TV	25-11***			25-17			25-19				25-20***			
Service Rating	N			M			I				N			
Number of Contacts	2	9		36		6	19		10	13	3	4		
Contact Size	20	10		22D		8 Twinax	12		20	16	8 Twinax	12 Coax		

(With Matched Impedance)

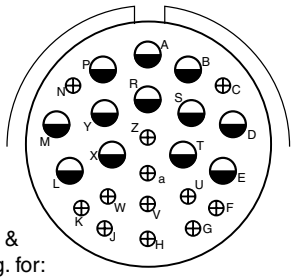

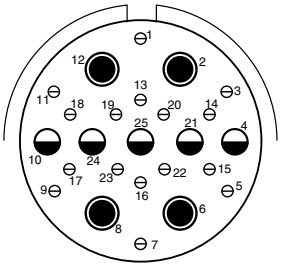

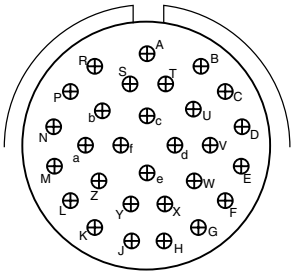

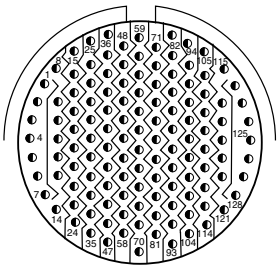

Shell Size & Insert Arrg. for:

Series II JT	24-24								24-29				24-35	
Series I LJT	25-24								25-29				25-35	
Series III TV	25-24				25-26				25-29				25-35	
Service Rating	I				I				I				M	
Number of Contacts	12	12		16	5	4			29				128	
Contact Size	16	12		20	12	8 Coax			16				22D	

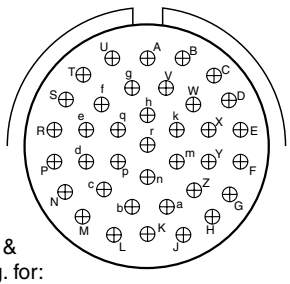

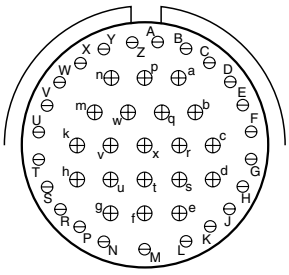

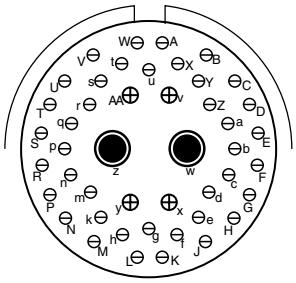

Shell Size & Insert Arrg. for:

Series II JT	24-37						25-43							
Series I LJT	25-37						25-43					25-46		
Series III TV	25-37						25-43					25-46		
Service Rating	I						I					I		
Number of Contacts	37						23		20			40	4	2
Contact Size	16						20		16			20	16	8 Coax

† Coax contacts for RG180/U or RG195/U cable.

CONTACT LEGEND 8 10 12 16 20 22D

Front face of pin inserts illustrated

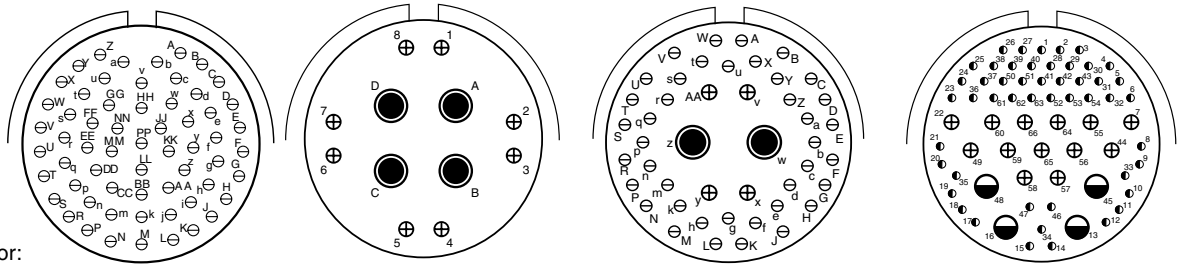

Shell Size & Insert Arrg. for:													
Series II JT	24-61												
Series I LJT	25-61												
Series III TV	25-61	25-62		25-90			25-F4						
Service Rating	I	I		I			Size 22D=M, Balance =I						
Number of Contacts	61	8	4	40	4	2	49	13	4				
Contact Size	20	16	8	20	16	8 Twinax	22D	16	12				

MIL-DTL-38999, Series III TV

Special Insert Arrangements

Front face of socket inserts illustrated

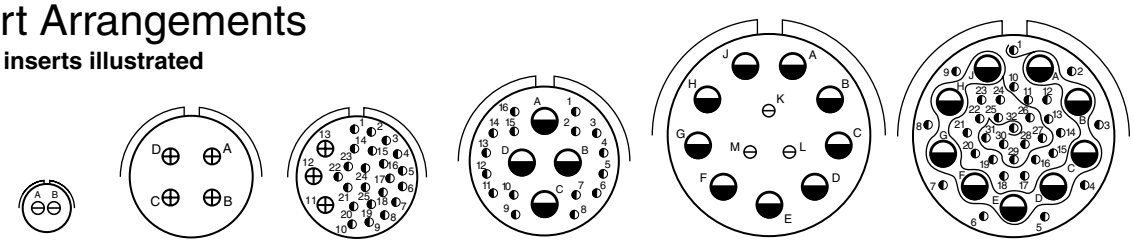

Shell Size & Insert Arrg. for:													
Series III TV	9-2	15-4*	15-25		17-20		21-12		21-21				
Service Rating	I	II	M		M		I		M/Inst.				
Number of Contacts	2	4	22	3	16	4	3	9	32	9			
Contact Size	20	16	22D	16	22D	12	20	12	22D	12			

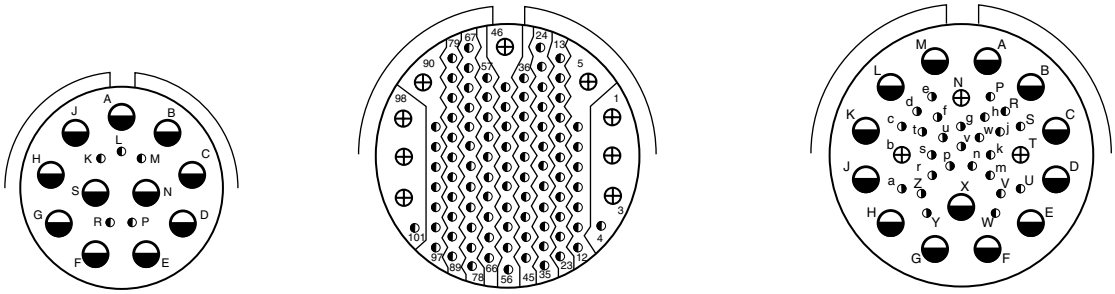

Shell Size & Insert Arrg. for:													
Series III TV	21-99		25-92			25-97							
Service Rating	M		M			M							
Number of Contacts	5	11	92	9		26	3	13					
Contact Size	22D	12	22D	16		22D	16	12					

NOTE: Some specials shown here were formerly known as Pyle arrangements. Consult Amphenol for how to order information for connectors with these inserts. For further information on special arrangements consult Amphenol Aerospace, Sidney NY.

* Pyle 15-4 does not mate with Amphenol Tri-Start 15-4 insert.

CONTACT LEGEND	8	10	12	16	20	22D

Non-Standard Shells or Large Contacts

Front face of pin inserts illustrated

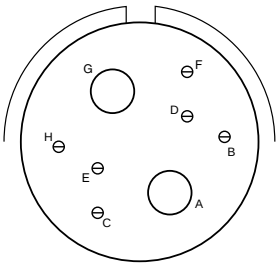

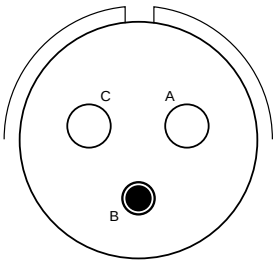

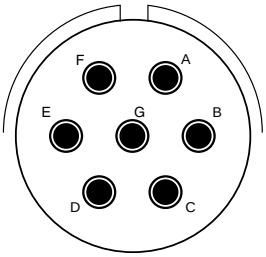

Shell Size & Insert Arrg. for:

Series III TV	25-16	25L-3	25L-7
Service Rating	M	II	II
Number of Contacts	6 2	1 2	7
Contact Size	20 4	8 4	8

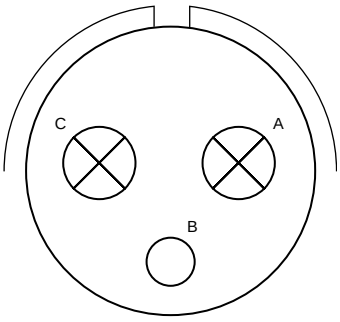

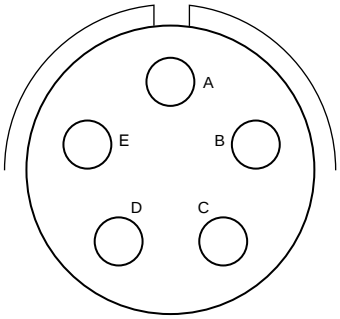

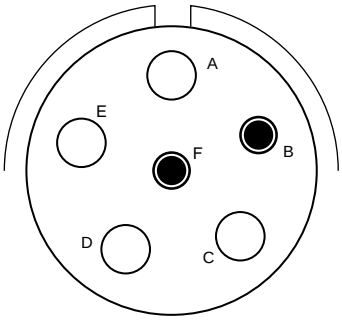

Shell Size & Insert Arrg. for:

Series III TV	33-3	33-5	33-6
Service Rating	II	II	II
Number of Contacts	1 2	5	2 4
Contact Size	4 0	4	8 4

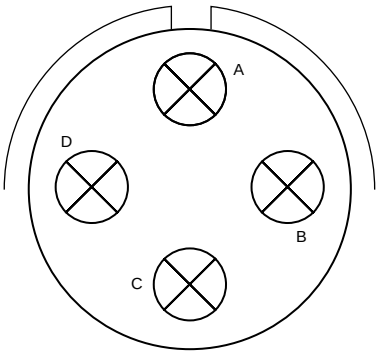

Shell Size & Insert Arrg. for:

Series III TV	37-5
Service Rating	II
Number of Contacts	4
Contact Size	0

NOTE: Some specials shown here were formerly known as Pyle arrangements. Consult Amphenol for how to order information for connectors with these inserts.

Consult Amphenol Aerospace for longer shell drawings.

CONTACT LEGEND

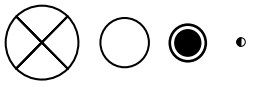

0 4 8 22D

CONTACT RATING

Contact Size	Test Current (Amps)		Maximum Millivolt Drop Crimp*	Maximum Millivolt Drop	
	Crimp	Hermetic		Solder*	Hermetic*
22M	3	2	45	20	60
22D	5	3	73		85
22	5	3	73	20	85
20	7.5	5	55	20	60
16	13	10	49	20	85
12	23	17	42	20	85
10 (Power)	33	NA	33	NA	NA
8 (Power)	46	NA	26	NA	NA
4	80	NA	23	NA	NA
0	150	NA	21	NA	NA

*When tested using silver plated wire.

Contact Size	Crimp Well Data		Solder Well Data	
	Well Diameter	Normal Well Depth	Well Diameter	Nominal Well Depth
22M	.028 ± .001	.141	.029 +.004 −.000	
22D	.0345 ± .0010	.141	.036 +.004 -.000	.094
22	.0365 ± .0010	.141	.036 +.004 -.000	.094
20	.047 ± .001	.209	.044 +.004 -.004	.125
16	.067 ± .001	.209	.078 +.000 -.004	.141
12	.100 ± .002	.209	.116 +.004 -.002	.141
10 (Power)	.137 ± .002	.355	NA	NA
8	.181 ± .002	.490	NA	NA
4	.281 ± .002	.490	NA	NA
0	.453 ± .002	.585	NA	NA

SERVICE RATING**

Service Rating	Suggested Oper. Voltage (Sea Level)		Test Voltage (Sea Level)	Test Voltage 50,000 Ft.	Test Voltage 70,000 Ft	Test Voltage 110,000 Ft.
	AC (RMS)	DC				
M	400	500	1300 VRMS	550 VRMS	350 VRMS	200 VRMS
N	300	450	1000 VRMS	400 VRMS	260 VRMS	200 VRMS
I	600	850	1800 VRMS	600 VRMS	400 VRMS	200 VRMS
II	900	1250	2300 VRMS	800 VRMS	500 VRMS	200 VRMS

**Please note that the establishment of electrical safety factors is left entirely in the designer's hands, since he is in the best position to know what peak voltage, switching surges, transients, etc. can be expected in a particular circuit.

MIL-DTL-38999 Series III STANDARD 500 CYCLE CONTACTS FOR TV AND CTV, P & S

Contact Size	TV/CTV Pins		TV/CTV Sockets	
	Military No.	Supersedes	Military No.	Supersedes
8 (Coax)*	M39029/60-367	MS27536	M39029/59-366	MS27535
8 (Power)	Contact Factory	"	"	"
8 (Twinax)	M39029/90-529**	N/A	M39029/91-530	N/A
10 (Power)	M39029/58-528	N/A	M39029/56-527	N/A
12	M39029/58-365	MS27493-12	M39029/56-353	MS27490-12
16	M39029/58-364	MS27493-16	M39029/56-352	MS27490-16
20	M39029/58-363	MS27493-20	M39029/56-351	MS27490-20
22D	M39029/58-360	MS27493-22D	M39029/56-348	MS27490-22D
4	N/A	N/A	N/A	N/A
0	N/A	N/A	N/A	N/A

** For use with M17/M176-00002 cable.
† Optional design - see slash sheet MS39029.
For other contact options available for use in Tri-Start connectors, (wire wrap, thermocouple, fiber optic) consult Amphenol. Wire wrap data given on next page.

Above part numbers include standard 500 cycle finish designation - gold plating over suitable underplate in accordance with SAE AS39029. For other finish variations, consult Sidney, NY.
*For use with RG180B/U and RG195A/U cable. For other size 8 coax or optional sizes 12 and 16 coax contacts available for use in Tri-Start connectors, see High Speed Contact section of this catalog or consult Amphenol, Sidney, NY.

MIL-DTL-38999 Series III 1500 CYCLE CONTACTS FOR CTV, CLASSES H & J

Contact Size	CTV Pins			CTV Sockets		
	Commercial No.	Military No.	Supersedes	Commercial No.	Military No.	Supersedes
12	10-597072-2X	M39029/107-623	–	10-597073-2X	M39029/106-617	–
16	10-597068-2X	M39029/107-622	–	10-597069-2X	M39029/106-616	–
20	10-597064-2X	M39029/107-621	–	10-597065-2X	M39029/106-615	–
22D	10-597058-3X	M39029/107-620	–	10-597061-2X	M39029/106-614	–

MIL-DTL-38999 Series II JT/ Series I LJT CRIMP CONTACTS

Contact Size	JT/LJT Pins MS No.	JT Socket MS No.	LJT Sockets MS No.
8 (Coax)*	M39029/60-367	NA	M39029/59-366
8 (Twinax)	M39029/90-529**	NA	M39029/91-530
10 (Power)	M39029/58-528	NA	M39029/56-527
12	M39029/58-365	M39029/57-359	M39029/56-353
16	M39029/58-364	M39029/57-358	M39029/56-352

Contact Size	JT/LJT Pins MS No.	JT Socket MS No.	LJT Sockets MS No.
20	M39029/58-363	M39029/57-357	M39029/56-351
22	M39029/58-362	M39029/57-356	M39029/56-350
22M	M39029/58-361	M39029/57-355	M39029/56-349
22D	M39029/58-360	M39029/57-354	M39029/56-348

FINISH DATA MIL-DTL-38999, Tri-Start Series III TV

Aluminum Shell Components Non-Hermetic		
Finish	**Service Class**	
	Military	**Commercial**
Anodic Coating (Non-Conductive)	C	RX**
Electroless Nickel	F (Metal)	RF
	M (Composite)	
Olive Drab Cadmium Plate Nickel Base	W (Metal)	RW
	J (Composite)	
Stainless Steel with Nickel Plate	S	RS
Stainless Steel	K	RK
Durmalon plated	T	DT
Zinc-Nickel Plated	Z	ZN

Hermetic Shell Components		
Material/Finish	**Service Class**	
	Military	**Commercial**
Stainless Steel	Y	Y
Stainless Steel with Nickel Plate	N	YN

**Add Suffix (005) to part number.

FINISH DATA MIL-DTL-38999, Series I LJT, II JT

Aluminum Shell Components Non-Hermetic					
Finish	**Suffix**			**Indicated Finish Standard for JT Types Listed Below**	**Indicated Finish Standard for LJT Types Listed Below**
	Military	**Commercial**	**Finish Plus "SR" Suffix**		
Cadmium Plated Nickel Base	MS (A)	–	(SR)	JT/JTG/JTL/JTP	LJT/LJTP
Anodic Coating (Alumilite)	MS (C)	(005)	(300)	JTS/JTPS/JTLS	LJTPS/LJTS
Chromate Treated (Iridite 14-2)		(011)	(344)	JTN/JTPN/JTLN	LJTN/LJTPN
Olive Drab Cadmium Plate Nickel Base	MS (B)	(014)	(386)		
Electroless Nickel	MS (F)	(023)	(424)		
Nickel-PTFE		(038)			

Hermetic Connectors				
Finish	**Suffix**		**Indicated Finish Standard for JT Types Listed Below**	**Indicated Finish Standard for LJT Types Listed Below**
	Military	**Commercial**		
Carbon Steel Shell Tin Plated Shell and Contacts			JT( )H / JT( )Y JTL( )H / JTL( )Y	LJT( )Y LJT( )H
Carbon Steel Shell Tin Plated Shell and Gold Plated Contacts	MS (D)			
Stainless Steel Shell Gold Plated Contacts	MS (E)	(162)	JTS( )Y JTLS( )Y	LJTS( )Y

Amphenol
MIL-DTL-38999, Series III, TV

New Featured

New Featured

TABLE OF CONTENTS

Combined MIL-DTL-38999 Series I, II, III

- Shell Size & Insert Arrangements Availability . . . . . 4 -7
- Insert Arrangement Drawings 8-14
- Specifications - Contact Ratings, Service Ratings, Finish Data 15, 16

MIL-DTL-38999, Series III TV

- Table of Contents 17
- Performance, Options 18, 19
- Weight Comparison (Composite vs. Metal) 20
- Test Data 21
- How to Order (Commercial & Military) 22-24
- How to Order (Boeing BACC63) 25

Shell Styles:

- Crimp Wall Mounting Receptacle TVP00R (D389999/20) /CTVP00R (D38999/20) 26
- Crimp Box Mounting Receptacle TVP02R / CTVP02R 27
- Crimp Straight Plug TV06R (D38999/26) / CTV06R (D38999/26) 28
- Crimp CLUTCH-LOK™ Straight Plug for High Vibration TV26/MTV26 29
- Crimp Jam Nut Receptacle TV07R (D38999/24) / CTV07R (D38999/24) . . . 30
- Crimp Line Receptacle TV01R / CTV01R 31
- Crimp Flange Mounting Plug TV09R 32
- Hermetic Box Mounting Receptacle TVPS02Y (D38999/21) 33
- Hermetic Jam Nut Receptacle TVS07Y (D38999/23) 34
- Hermetic Solder Mounting Receptacle TVSIY (D38999/25), Hermetic Weld Mounting Receptacle TVSHIY (D38999/27) 35
- Breakaway Fail-Safe Lanyard Release Plug D38999/29 & /30 (88-5565 / 91-5565) 36, 37
- Breakaway Fail-Safe How to Order (Military/Commercial) 38, 39
- Breakaway MIL-STD-1760 Lanyard Release Plug D38999/31 40
- Breakaway MIL-STD-1760 How to Order (Military) 41
- Breakaway Hybrid, Low Profile Lanyard Release Plug 42
- Stores Management Type II, Rail Launch (MIL-STD-1760) 42
- HD38999 (High Density, Crimp) Plugs and Receptacles / How to Order . 43, 44
- Accessories, Contacts, and Tools see pages 89-108

MIL-DTL-38999 Series III Typical Markets:

- Military & Commercial Aviation
- Military Vehicles
- Missiles & Ordnance
- C4ISR
- Space Applications

Amphenol Aerospace

Tri-Start™ MIL-DTL-38999 Series III with Metal Shells - Aluminum, Stainless Steel, Class K Firewall

Amphenol® Tri-Start MIL-DTL-38999* Series III Connectors offer the highest performance capabilities for both general duty and severe environment applications. Meeting or exceeding MIL-DTL-38999 Series III requirements, the Tri-Start connector with standard metal shells (aluminum or stainless steel with several finish options) offers these features:

- **EMI Shielding** - solid metal to metal coupling, grounding fingers, electroless nickel plating, and thicker wall sections provide superior EMI shielding capability of 65dB minimum at 10 GHz
- **Contact Protection -** recessed pins in this 100% scoop-proof connector minimize potential contact damage
- **Moisture Resistance -** improved interfacial seal design helps prevent electrolytic erosion of contacts
- **Corrosion Resistance -** shells of stainless steel or cadmium over nickel plating withstand a 500 hour salt spray exposure
- **Vibration/Shock -** operates under severe high temperature vibration, through 200°C
- **Firewall Capability -** available in a stainless steel shell, class RK, RS
- **Lockwiring Eliminated -** unique, self-locking, quick coupling connector eliminates lockwiring
- **Quick Coupling -** completely mates and self-locks in a 360° turn of the coupling nut
- **Inventory Support Commonality -** uses standard MIL-DTL-38999 contacts, application tools, insert arrangements
- **Electrostatic Discharge Protection (ESD) -** protection for sensitive circuitry without diodes, varistors, etc., with the use of the Faraday Cage principle which shunts high voltage, high current discharge events (see page 422)
- **Hermetic-** air leakage limited to 1 X 10^{-7} cm^3 per second optional
- **Qualified Specifications** - Stainless Steel qualified to BACC63DB and BACC63DC specifications

Optional Shell Geometries
Amphenol offers a number of different shell configurations to fit your needs.

- Deep Reach Shells - For increased panel thickness
- Stand-off Flange Shells - For attachments to Printed Circuit boards.
- Connector with Integral Strain Reliefs

* MIL-DTL-38999 Series III supersedes MIL-C-38999 Series III.

Applicable Patents:
Tri-Start™ Connector Patent 4,109,990.
Composite Connector Patents:
4,268,103; 4,648,670; 4,682,832; 4,703,987.
Clutch-Lok® Patent 6,152,753.

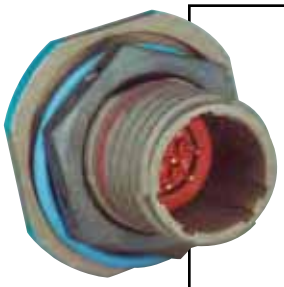

Series III

Composite Tri-Start, Qualified to MIL-DTL-38999, Rev. J

MIL-Qualified to MIL-DTL-38999, Rev. K, the Amphenol® Composite Tri-Start Connector offers a lightweight, corrosion resistant connector with the same high performance features as its metal counterpart. The Composite Tri-Start Connector also includes the following features:

- **Lightweight -** 17% – 70% weight savings
  (17–40% weight savings vs. Aluminum)
  (60–70% weight savings vs. Stainless steel)
  See Composite weight comparison chart on page 20.
- **Corrosion Resistance -** available in standard MIL-DTL-38999 olive drab cadmium (-65°C to 175°C) and electroless nickel plating (-65°C to 200°C), both with standing 2000 hours of salt spray exposure. The base material is able to withstand an indefinite exposure to salt spray.
- **Durability -** 1500 couplings minimum (in reference to connector couplings, not contacts)
- **Extended Life Contact -** Mil-approved plating process which provides 1500 couplings minimum
- Qualified to BACC63CT and BACC63CU specifications

CLUTCH-LOK™ MIL-DTL-38999 Series III High Vibration Connector

The Tri-Start option CLUTCH-LOK offers all advantages of stainless steel/Class K firewall for MIL-DTL-38999 Series III connectors, plus a unique clutch design that actually tightens itself under vibration.
Features include:

- High degree of differential torque
- No settling back to the next ratchet tooth
- Completely intermateable with all existing MIL-DTL-38999 Series III connectors
- Offers advantage in inaccessible, hard to reach areas where mating torque is difficult to apply and complete coupling is not verifiable by inspection

See page 29 for description, 22 – 24 for ordering.

Amphenol Aerospace

Series III, TV Tri-Start Connectors, offer more versatility & options than any other interconnection family!

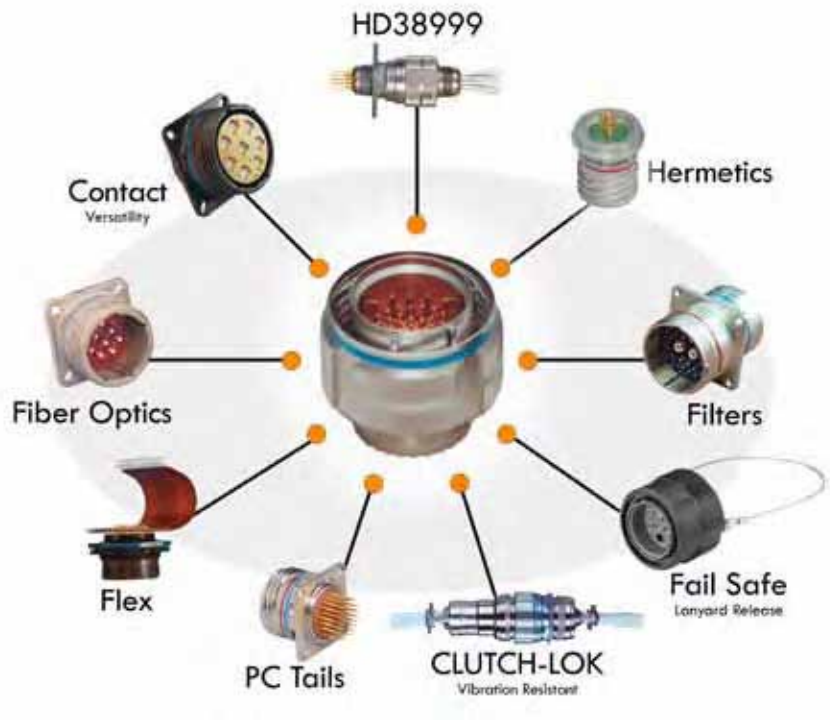

High reliability and increased versatility best describe Amphenol MIL-DTL-38999, Series III circular connectors. Originally designed for the harshest of environments and most demanding of applications, Amphenol MIL-DTL-38999 Series III, Tri-Start connectors continue to evolve in pace with the needs of an ever-changing market.

Amphenol Tri-Start connectors can be configured with a number of application specific technologies like Filters, Hermetics, PC Tails, Fiber Optics, Flex, CLUTCH-LOK, Fail Safe, and contacts. Flexibility aids in design optimization through the combination of different technologies within a common, time-tested, harsh environment connector body.

For more information about options please call 800-678-0141 or visit www.amphenol-aerospace.com.

Performance

Designed for Performance

Numerous advantages in performance capability are designed into the Amphenol Tri-Start Connector. A positive metal to metal coupling design, grounding fingers, and electroless nickel plating provide superior EMI shielding capability of 65 dB minimum at 10 GHz.

Acme threads provide coupling durability. Thicker wall sections and a greater coupling surface area improve strength and shock resistance. Blunting of the thread on both the coupling nut and receptacle eliminates cross coupling. The connector quickly mates and self locks in a 360° turn of the coupling nut.

Elongated mounting holes permit the Tri-Start Connector to intermount with various existing MIL-Spec box or wall mount receptacles, giving it a design replacement advantage.

Shells of stainless steel, or cadmium over nickel plating prevent severe corrosion. Resistance is tested through exposure to a 500 hour salt spray. Composite versions provide protection from salt spray exposure for 2000 hours. Other finish options are available; see how to order Tri-Start metal and Tri-Start Composite.

Recessed pins minimize potential contact damage in this 100% scoop-proof connector. In a blind mating application, mating shells cannot “scoop” the pins and cause a shorting or bending of contacts.

The design of the Amphenol Tri-Start interfacial seal meets the MIL-DTL-38999 Series III requirements for electrolytic erosion resistance.

A rigid dielectric insert with excellent electrical characteristics provides durable protection to the contacts. The socket contacts are probe proof, and all contacts are rear removable. They are plated in the standard 50 micro inches minimum gold, with 100 micro inches as an option, and are available in standard Tri-Start insert arrangements and special Pyle® insert arrangements in sizes 10 power, 12, 16, 20 and 22D contacts. Special insert patterns are also available with larger contacts in sizes 4 and 0.

Depending on the shell style, shell size and contact count, weight savings can range from 17% to 40% compared to standard aluminum product

Tri-Start Weight in Ounces (includes contacts)

Weight

	Wall Mount Receptacle (00 • Military D38999/20						Jam Nut Receptacle (07) • Military D38999/24						Plug (06) • Military D38999/26					
	Stainless Steel		Aluminum		Composite		Stainless		Aluminum		Composite		Stainless Steel		Aluminum		Composite	
	Pin	Socket	Pin	Socket	Pin	Socket	Pin	Socket	Pin	Socket	Pin	Socket	Pin	Socket	Pin	Socket	Pin	Socket
9-35	.7216	.7840	.3248	.3777	.2588	.3121	1.1472	1.2096	.4416	.5040	.3489	.4413	1.0736	1.1360	.4236	.4625	.2606	.2994
9-98	.7216	.7776	.2496	.3056	.1664	.2224	1.1472	1.2032	.4416	.4976	.3744	.4640	1.0736	1.1296	.3968	.4624	.2991	.2337
11-35	.9488	1.0800	.3632	.4960	.2753	.4081	1.4304	1.5632	.5936	.7264	.4679	.6007	1.2480	1.3808	.5312	.6389	.3450	.4582
11-98	.9488	1.0620	.3632	.4768	.2753	.3889	1.4304	1.5440	.5936	.7072	.4679	.5815	1.2480	1.3616	.5330	.6283	.3468	.4457
13-8	1.2096	1.3888	.4800	.6592	.3696	.5488	1.9104	2.0896	.7664	.9456	.6560	.8352	1.8048	1.9840	.7936	.9728	.5237	.5952
13-35	1.2160	1.4320	.4864	.7024	.3762	.5922	1.9168	2.1328	.7728	.9888	.6136	.8296	1.8112	2.0272	.8000	.8472	.5301	.6531
13-98	1.2160	1.4016	.4864	.6720	.3762	.5618	1.9168	2.1024	.7728	.9584	.6136	.7992	1.8112	1.9968	.7978	.9856	.5244	.7157
15-5	1.5312	1.7904	.6352	.8944	.5027	.7619	2.3792	2.6384	.9728	1.2320	.7749	1.0341	2.2704	2.5456	.9632	1.1719	.6450	.8467
15-18	1.5456	1.8416	.7760	.9456	.6432	.8128	2.3936	2.6896	.9872	1.2832	.8544	1.1504	2.2848	2.5808	.9776	1.2736	.6594	.8208
15-35	1.5424	1.8768	.6464	.9808	.5139	.8483	2.3904	2.7344	.9840	1.3280	.7861	1.1301	2.2816	2.6256	1.2179	1.3184	.8961	1.0002
17-6	2.1488	2.5904	.9360	1.3776	.7812	1.2228	2.9152	3.3568	1.2336	1.6752	.9940	1.4356	2.5008	3.1024	1.1408	1.7424	.8160	1.4176
17-26	2.1344	2.5600	.9216	1.3472	.7668	1.1924	2.9008	3.3264	1.2192	1.6448	.9796	1.4052	2.4864	2.9120	1.1264	1.3343	.8017	.8062
17-35	2.1360	2.6640	.9232	1.4512	.7684	1.2964	2.9024	3.4304	1.2208	1.7488	.9812	1.5092	2.4880	3.0160	1.1280	1.5497	.8033	1.2144
19-11	2.2592	2.6656	.9696	1.4528	.7925	1.2757	3.4352	3.9184	1.4720	1.9552	1.2033	1.6865	2.9808	3.4640	1.3472	1.8304	.9632	1.4464
19-32	2.1888	2.7264	.9760	1.5136	.7989	1.3365	3.4416	3.9792	1.4784	2.0160	1.2097	1.7473	2.9872	3.5248	1.3536	1.8912	.9696	1.5072
19-35	2.1920	2.8432	.9792	1.6304	.8021	1.4533	3.4448	4.0960	1.4816	2.1328	1.2129	1.8641	2.9904	3.6416	1.3568	2.0080	.9728	1.6240
21-11	2.7456	3.4640	1.3088	2.0272	1.1088	1.8272	3.9712	4.6896	1.8128	2.5312	1.6128	2.3312	3.4448	4.1632	1.7344	2.5312	1.3039	1.8710
21-16	2.6784	3.3168	1.2416	1.8800	1.0422	1.6806	3.9040	4.5424	1.7456	2.3840	1.4505	2.0889	3.3776	4.0160	1.6672	2.3168	1.2352	1.8736
21-35	2.6672	3.4992	1.2304	2.0624	1.0310	1.8630	3.8928	4.7248	1.7344	2.5664	1.4393	2.2713	3.3664	4.1984	1.6560	2.2309	1.2255	1.8003
21-41	2.6768	3.3600	1.2400	1.9232	1.0406	1.7238	3.9024	4.5856	1.7440	2.4272	1.4489	2.1321	3.3760	3.5792	1.6656	1.8688	1.2336	1.4368
23-21	3.0352	3.8624	1.4496	2.2768	1.2279	2.0551	4.2368	5.0640	1.9440	2.7712	1.6368	2.4640	3.7920	4.6192	1.9216	2.7488	1.4637	2.2896
23-35	3.0240	4.0448	1.4384	2.4592	1.2167	2.2375	4.2256	5.2464	1.9328	2.9536	1.6256	2.6464	3.7808	4.8016	1.9104	2.6087	1.4525	2.1507
23-53	2.8992	3.9072	1.4560	2.4816	1.2343	2.2599	4.2432	5.1088	1.9504	2.8160	1.6432	2.5088	3.7984	4.6640	1.9280	2.7936	1.4672	2.2384
25-4	3.4512	4.4800	1.7312	2.8816	1.4864	2.1904	4.8048	5.8272	2.2016	3.2480	1.9568	2.8720	4.2224	5.2496	2.2128	3.2560	1.7133	2.4163
25-19	3.5312	4.7264	1.8112	3.0064	1.5664	2.7616	4.8848	6.0816	2.2816	3.4784	2.0368	3.2336	4.3024	5.4992	2.2928	3.4896	1.7933	2.7058
25-20	3.8190	4.7150	2.0173	3.1125	1.7733	2.8512	5.1430	6.0380	2.4877	3.5421	2.1872	3.2416	4.4350	5.3300	2.2580	3.0182	1.8288	2.8928
25-35	3.4416	4.6656	1.7216	2.9456	1.4776	2.7016	4.7952	6.0192	2.1920	3.4160	1.8915	3.1155	4.2128	5.4368	2.2032	3.4272	1.7037	2.9277
25-61	3.4304	4.4848	1.7282	2.7648	1.4841	2.5208	4.7840	5.8384	2.1808	3.2352	1.8803	2.9347	4.2016	5.2560	2.1920	3.2464	1.6912	2.7456

All weight measurements are for reference only.

TRI-START, SERIES III
TYPICAL SHIELDING EFFECTIVENESS TEST DATA

EMI/EMP SHIELDING EFFECTIVENESS dB
TESTING BY TRIAXIAL METHOD

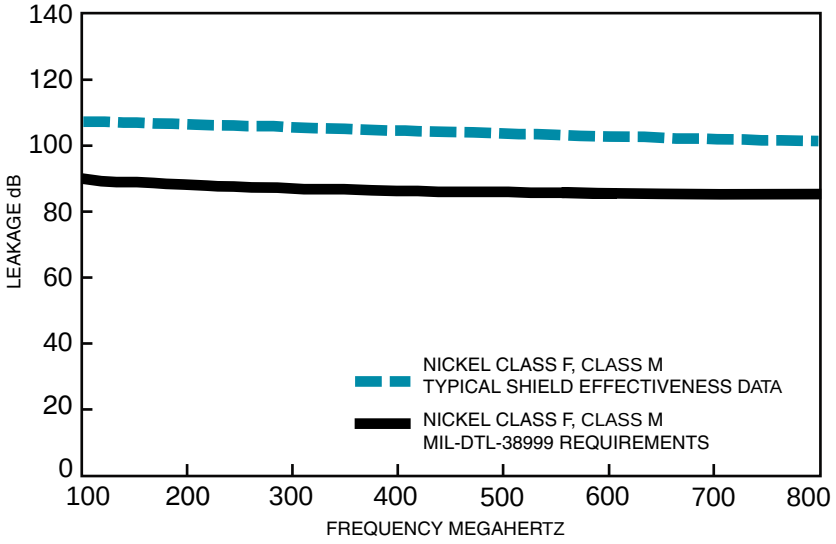

Amphenol® Tri-Start connectors provide EMI/EMP shielding capability which exceeds MIL-DTL-38999 Series III requirements.

The TV and CTV Series III connector with standard solid metal to metal coupling, EMI grounding fingers and conductive finishes has proven to be the ultimate in EMI/EMP shielding effectiveness. The charts illustrate shielding effectiveness data which is typical of Tri-Start connectors tested with the nickel finish (Class F-metal, Class M-composite) over a wide frequency range.

The vibration capability of the Tri-Start Series is shown in the chart below. This illustrates the most severe vibration envelope of *any* qualified connector available today.

These capabilities along with a +200°C, -65°C temperature rating and superior moisture sealing protection provide the user with a connector that can withstand the most rigorous application.

TRI-START, SERIES III
TYPICAL SHIELDING EFFECTIVENESS TEST DATA

EMI/EMP SHIELDING EFFECTIVENESS dB
TESTING BY MODE STIRRING METHOD

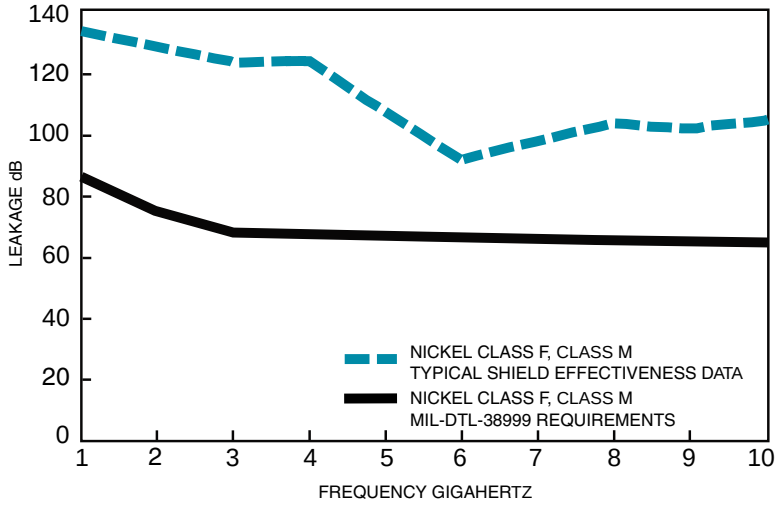

TRI-START
VIBRATION CRITERIA

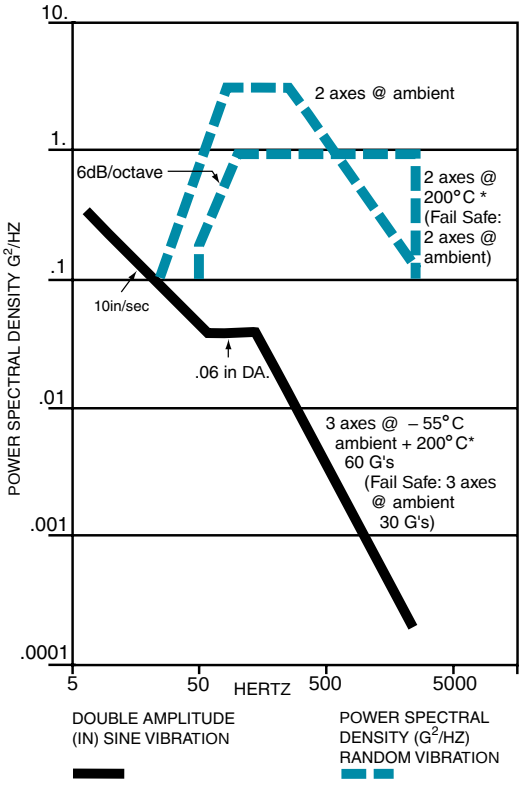

* Dependant on shell finish

Test data beyond 2GHz is subject to equipment variation.

NOTE: For test data information on the new Clutch-Lok Tri-Start, high vibration connectors, consult Amphenol Aerospace.

Easy Steps to build a part number... Tri-Start Series III TV

1. Commercial	2. Shell Style	3. Service Class	4. Shell Size– Insert Arrangement	5. Contact Type	6. Alternate Keying Position	7. Special Variations
TVPS	00	RF	9-35	P	B	(XXX)
Military	**Shell Style**	**Service Class**	**Shell Size– Insert Arrangement**	**Contact Type**	**Alternate Keying Position**	
D38999/	20	J	G35	P	N	

Step 1. Select a Connector Type

	Designates
TV	Tri-Start Series Connector
TVP	Back panel mounted receptacle
TVS	200° C rated
TVPS	Panel mounted, 200°C rated receptacle
MTV	CLUTCH-LOK connector with "MS" stamping (Note: remove dashes in how to order part number when ordering CLUTCH-LOK)
CTV	Composite MIL-DTL-38999 Series III Connector
CTVP	Panel mounted composite receptacle
CTVS	200° C rated, composite
CTVPS	Composite Panel mounted, 200° rated receptacle
D38999	Military MIL-DTL-38999 Series III Connector

Step 2. Select a Shell Style

COMMERCIAL					MILITARY			Designates
TVP, TVPS, CTVP, CTVPS	TV, CTV	TVS	CTVS	CLUTCH-LOK	D38999 Military	D38999 Military Composite	MTV, D38999 CLUTCH-LOK	
00					20	20		Wall Mount Receptacle
02								Box Mount Receptacle
					21			Box Mount Receptacle Hermetic
	01	01	01					Line Receptacle
	06	06	06		26	26		Straight Plug
	07	07	07		24	24		Jam Nut Receptacle
	09	09						Flange Mounted Plug
					23			Jam Nut Receptacle Hermetic
		I			25			Solder Mount Receptacle Hermetic
		HI			27			Weld Mounted Receptacle, **(Hermetic)** Only
				26			26	CLUTCH-LOK high vibration straight plug (service Classes RK & RS only
					29			Lanyard release plug with pin contacts
					30			Lanyard release plug with socket contacts
					31			Lanyard release plug for MIL-STD-1760 with pin contacts
					32			Plug protection cap
					33			Receptacle protection cap

Wall Mount Receptacle

Line Receptacle

Box Mount Receptacle

Straight Plug

Lanyard Release Plug

Jam Nut Receptacle

Flange Mounting Plug

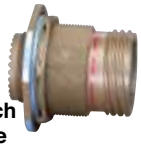
Deep Reach Receptacle

Solder Mount Hermetic Receptacle

Amphenol Aerospace

Step 3. Select a Service Class

1. Connector Type	2. Shell Style	3. Service Class	4. Shell Size-Insert Arrg.	5. Contact Type	6. Alternate Position	7. Special Variations
		RX				

TV, TVP	CTV, CTVP	CTVS, CTVPS	TVS	TVPS	CLUTCH-LOK	Military	Finish	Description
			RX			C	Anodic Coating	Alternate finish, Non-conductive, anodic coated aluminum, 500 hour salt spray, 200°C. Consult Amphenol, Sidney NY for details, options and availability of non-cadmium or nickel finishes.
		RF-Composite	RF-Metal	RF-Metal		F-Metal M-Composite	Electroless Nickel	electroless nickel plated aluminum (composite) optimum EMI shielding effectiveness–65dB @ 10GHz specification min., 48 hour salt spray, 200°C (Composite-2000 hours dynamic salt spray).
		RGF-Composite	RGF-Metal				Electroless Nickel	electroless nickel plated ground plane aluminum (composite), 200°C
						G	Electroless Nickel	Space grade, electroless nickel, 48 hour salt spray, 200°C
RGW-Metal	RGW-Composite						Olive Drab Cadmium	Olive drab cadmium plated ground plane aluminum (composite), 175°C
			RK**	RK**	RK**	K	Passivated Stainless Steel	Corrosion resistant stainless steel, firewall capability, plus 500 hour salt spray resistance, EMI –45 dB @ 10 GHz specification min., 200°C
			RL	RL		L	Stainless Steel w/ Nickel Plate	Corrosion resistant steel, electro deposited nickel, 500 hour salt spray, 200°C, non firewall
RW-Metal	RW-Composite					W-Metal J-Composite	Olive Drab Cadmium	Corrosion resistant olive drab cadmium plate aluminum (composite), 500 hour salt spray, EMI –50 dB @ 10 GHz specification min., 175°C (Composite-2000 hours dynamic salt spray).
			Y	Y		Y	Stainless Steel	Hermetic seal, passivated stainless steel, 200°C
			RS*	RS*	RS*	S	Stainless Steel w/ Nickel Plate	(Non-hermetic connectors), Nickel plated, corrosion resistant steel, firewall capability, 500 hour salt spray, 200°
			YN	YN		N	Stainless Steel w/ Nickel Plate	(Hermetic connectors), Nickel plated corrosion resistant steel, 200°C
DT						T	Durmalon plated	Nickel-PTFE alternative to Cadmium. Corrosion resistant, 500 hour salt spray, EMI-50dB at 10GHz specification min., 175°C
DZ						Z	Zinc-Nickel Plated	Zinc-Nickel Alternative to Cadmium corrosion resistant, 500 hour salt spray, Conductive, -65°C to +175°C

* Consult Amphenol Aerospace, Sidney, NY for availability. **Coaxial arrangements are not available in these classes.

Quadrax or Differential Twinax:

The incorporation of Quadrax or Differential Twinax contacts requires a modified connector to accommodate keyed contacts.

* D38999/26KJ20PN, is a series III stainless steel plug with twin axial and coaxial contacts that may not meet the firewall requirement of the specification. D38999/26KJ61HN, is a series III stainless steel plug with high durability contacts. However, the connector will be limited to 500 cycles of durability. Insert arrangements using multi-axial (i.e. coax, twinax, triax shielded) contacts should not be used in firewall applications.

Step 4. Select a Shell Size & Insert Arrangement see pg. 4-7

Shell Size & Insert Arrangement are on pages 4-7. First number represents Shell Size, second number is the Insert Arrangement.

1. Connector Type	2. Shell Style	3. Service Class	4. Shell Size-Insert Arrg.	5. Contact Type	6. Alternate Position	7. Special Variations
			22-2	P		

Step 5. Select a Contact Type

	Designates
P	Pin Contacts
S	Socket Contacts
H	1500 Cycle Pin Contacts - Recommended for composite
J	1500 Cycle Socket Contacts - Recommended for composite
A	Same as “P” except supplied less pin Contacts (For Military D38999 prefix only)
B	Same as “S” except supplied less socket contacts (A & B designate nonstandard contact applications) (For Military D38999 prefix only)
X	Eyelet contacts, hermetics only

Step 6. Select an Alternate Keying Position

1. Connector Type	2. Shell Style	3. Service Class	4. Shell Size-Insert Arrg.	5. Contact Type	6. Alternate Position	7. Special Variations
					B	

Key/Keyway Position

Shell Size	Key & Keyway Arrangement Identification Letter	AR° or AP° BSC	BR° or BP° BSC	CR° or CP° BSC	DR° or DP° BSC
9	N*	105	140	215	265
	A	102	132	248	320
	B	80	118	230	312
	C	35	140	205	275
	D	64	155	234	304
	E	91	131	197	240
11, 13, and 15	N*	95	141	208	236
	A	113	156	182	292
	B	90	145	195	252
	C	53	156	220	255
	D	119	146	176	298
	E	51	141	184	242
17 and 19	N*	80	142	196	293
	A	135	170	200	310
	B	49	169	200	244
	C	66	140	200	257
	D	62	145	180	280
	E	79	153	197	272
21, 23, and 25	N*	80	142	196	293
	A	135	170	200	310
	B	49	169	200	244
	C	66	140	200	257
	D	62	145	180	280
	E	79	153	197	272
25L, 33, and 37	N*	80	142	188	293
	A	135	170	188	310
	B	49	169	188	244
	C	66	140	188	257
	D	62	145	188	280
	E	79	153	188	272

** An "N" designation is used on D38999 military part number but not on the commercial versions*

A plug with a given rotation letter will mate with a receptacle with the same rotation letter. The angles for a given connector are the same whether it contains pins or sockets. Master key stay fixed, minor keys rotate. Inserts are not rotated in conjunction with the master key/keyway.

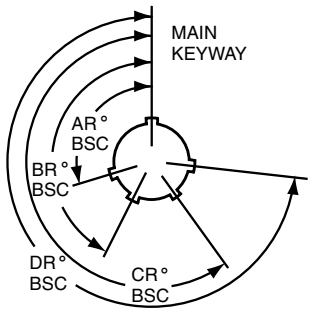

RECEPTACLE (front face shown)

PLUG (front face shown)

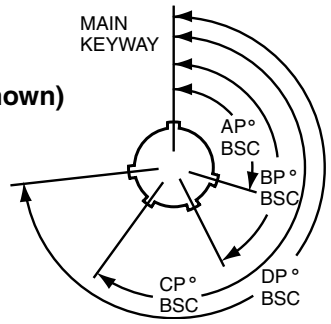

Step 7. Special Variations

Consult Amphenol Aerospace, Sidney NY for variations.

1. Connector Type	2. Shell Style	3. Service Class	4. Shell Size-Insert Arrg.	5. Contact Type	6. Alternate Position	7. Special Variations
						(xxx)

Easy Steps to build a part number... Boeing BACC63 CT & CU

1. Boeing Basic Number	2. Style	3. Shell Size	4. Shell Finish & Contact	5. Insert Arrangement	6. Contact Type	7. Alternate Keying Position	8. Ordering Option
BACC63	CT	15	—	19	P	N	H

Composite

Step 1. Boeing Number
BACC63

Step 2. Select a Style

	Designates
CT	Composite Plug
CU	Composite Receptacle

Step 3. Shell Size 15

	Designates
15	One Shell Size

Step 4. Select a Shell Finish & Contact

	Designates
C	**CT Style Only.** Cadmium Plated, Grounded
D	Cadmium Plated, ungrounded
G	Nickel Plated, Grounded
—	Nickel Plated, Ungrounded

Step 5. Insert Arrangements-
Consult Amphenol Aerospace for insert Arrangements available.

Step 6. Select a Contact Type

	Designates
P	Pin
S	Socket

Step 7. Select an Alternate Keying Position

	Designates
N	Normal
A-E	Alternates

Step 8. Ordering Option

	Designates
H	Without Contacts & Seal Plugs
Blank	With contacts and seal plugs

Easy Steps to build a part number... Boeing BACC63 DB & DC

1. Boeing Basic Number	2. Style	3. Shell Size	4. Separator	5. Insert Arrangement	6. Contact Type	7. Alternate Keying Position	8. Ordering Option
BACC63	DB	15	—	19	P	N	H
BACC63	DC	17	—	8	P	N	H

Stainless Steel

Step 1. Boeing Number
BACC63

Step 2. Select a Style

	Designates
DB	Stainless Steel Plug
DC	Stainless Steel Receptacle

Step 3. Select a Shell Size

	Designates
9-25	Shell Size

Step 4. Separator

	Designates
—	Separator

Step 5. Insert Arrangements-
Consult Amphenol Aerospace for insert Arrangements available.

Step 6. Select a Contact Type

	Designates
P	Pin
S	Socket

Step 7. Select an Alternate Keying Position

	Designates
N	Normal
A-E	Alternates

Step 8. Ordering Option

	Designates
H	Without Contacts & Seal Plugs
Blank	With contacts and seal plugs

TVP00R (D38999/20) - Crimp, Metal
CTVP00R (D38999/20) - Crimp, Composite
Wall Mounting Receptacle

PART #

To complete, see how to order pages 22-24.

Connector Type	Shell Style	Service Class	Shell Size & Insert Arrg	Contact Type	Alternate Position	Special Variations
TVP	00	RW	9-35	P	B	(453)
TVPS	00	RK	X-X	X	X	(XXX)
TVPS	00	RF	X-X	X	X	(XXX)
TVPS	00	RS	X-X	X	X	(XXX)
CTVP	00	RW	X-X	X	X	(XXX)
CTVPS	00	RF	X-X	X	X	(XXX)
D38999/	20	X	X-X	X	X	NA

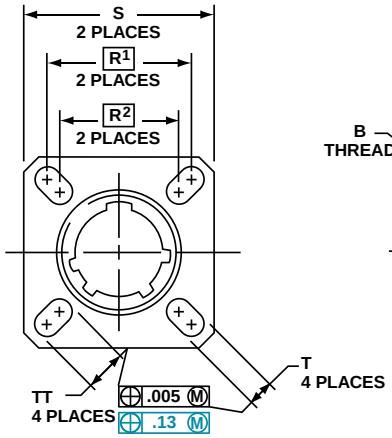

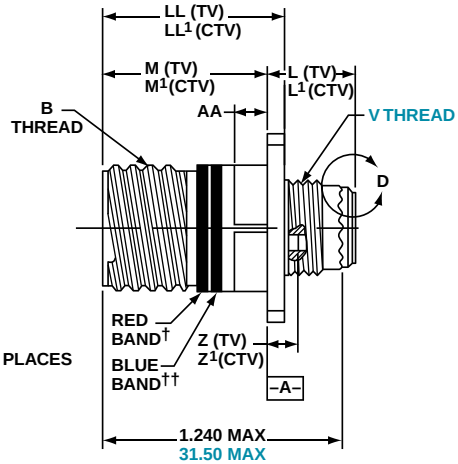

VIEW D
FOR SIZE 8 COAXIAL ONLY,
RELATIVE TO –A–

VIEW D
FOR SIZE 8 TWINAX ONLY,
RELATIVE TO –A–

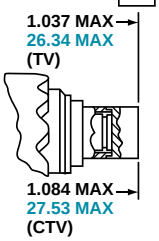

PANEL HOLE DIMENSIONS

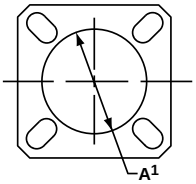

BACK PANEL MOUNTING

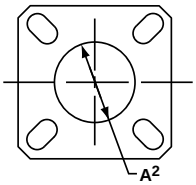

FRONT PANEL MOUNTING

† Red band indicates fully mated

†† Blue band indicates rear release contact retention system

Inches

Shell Size	MS Shell Size Code	B Thread Class 2A 0.1P=0.3L-TS (Plated)	L Max. (TV)	L1 Max. (CTV)	M +.000 –.005 (TV)	M1 +.000 –.005 (CTV)	R1	R2	S Max.	T ±.008	Z. Max. (TV)	Z1 Max. (CTV)	A1 Back Panel Mount	A2 Front Panel Mount	AA Max. Panel Thick-ness	LL +.006 –.000 (TV)	LL1 ±.005 (CTV)	TT ±.008
9	A	.6250	.469	.514	.820	.773	.719	.594	.948	.128	.153	.198	.650	.510	.234	.905	.908	.216
11	B	.7500	.469	.514	.820	.773	.812	.719	1.043	.128	.153	.198	.800	.620	.234	.905	.908	.194
13	C	.8750	.469	.514	.820	.773	.906	.812	1.137	.128	.153	.198	.910	.740	.234	.905	.908	.194
15	D	1.0000	.469	.514	.820	.773	.969	.906	1.232	.128	.153	.198	1.040	.900	.234	.905	.908	.173
17	E	1.1875	.469	.514	.820	.773	1.062	.969	1.323	.128	.153	.198	1.210	1.010	.234	.905	.908	.194
19	F	1.2500	.469	.514	.820	.773	1.156	1.062	1.449	.128	.153	.198	1.280	1.130	.234	.905	.908	.194
21	G	1.3750	.500	.545	.790	.741	1.250	1.156	1.575	.128	.183	.228	1.410	1.250	.204	.905	.904	.194
23	H	1.5000	.500	.545	.790	.741	1.375	1.250	1.701	.154	.183	.228	1.530	1.360	.204	.905	.904	.242
25	J	1.6250	.500	.545	.790	.741	1.500	1.375	1.823	.154	.183	.228	1.660	1.470	.204	.905	.904	.242

Millimeters

Shell Size	MS Shell Size Code	L Max. (TV)	L1 Max. (CTV)	M +.00 –.13 (TV)	M1 +.00 –.13 (CTV)	R1	R2	S Max.	T ±.20	V Thread Metric	Z. Max. (TV)	Z1 Max. (CTV)	A1 Back Panel Mount	A2 Front Panel Mount	AA Max.	LL +.15 –.00 (TV)	LL1 ±.13 (CTV)	TT ±.20
9	A	11.91	13.06	20.83	19.63	18.26	15.09	24.1	3.25	M12X1-6g	3.89	5.03	16.66	13.11	5.94	22.99	23.06	5.49
11	B	11.91	13.06	20.83	19.63	20.62	18.26	26.5	3.25	M15X1-6g	3.89	5.03	20.22	15.88	5.94	22.99	23.06	4.93
13	C	11.91	13.06	20.83	19.63	23.01	20.62	28.9	3.25	M18X1-6g	3.89	5.03	23.42	19.05	5.94	22.99	23.06	4.93
15	D	11.91	13.06	20.83	19.63	24.61	23.01	31.3	3.25	M22X1-6g	3.89	5.03	26.59	23.01	5.94	22.99	23.06	4.39
17	E	11.91	13.06	20.83	19.63	26.97	24.61	33.7	3.25	M25X1-6g	3.89	5.03	30.96	25.81	5.94	22.99	23.06	4.93
19	F	11.91	13.06	20.83	19.63	29.36	26.97	36.9	3.25	M28X1-6g	3.89	5.03	32.94	28.98	5.94	22.99	23.06	4.93
21	G	12.70	13.84	20.07	18.82	31.75	29.36	40.1	3.25	M31X1-6g	4.65	5.79	36.12	32.16	5.18	22.99	22.96	4.93
23	H	12.70	13.84	20.07	18.82	34.93	31.75	43.3	3.91	M34X1-6g	4.65	5.79	39.29	34.93	5.18	22.99	22.96	6.15
25	J	12.70	13.84	20.07	18.82	38.10	34.93	46.4	3.91	M37X1-6g	4.65	5.79	42.47	37.69	5.18	22.99	22.96	6.15

All dimensions for reference only

Designates true position dimensioning

Box Mounting Receptacle

PART

To complete, see how to order pages 22-24.

Connector Type	Shell Style	Service Class	Shell Size & Insert Arrg	Contact Type	Alternate Position	Special Variations
TVP	02	RW	9-35	P	B	(453)
TVPS	02	RK	X-X	X	X	(XXX)
TVPS	02	RF	X-X	X	X	(XXX)
TVPS	02	RS	X-X	X	X	(XXX)
CTVP	02	RW	X-X	X	X	(XXX)
CTVPS	02	RF	X-X	X	X	(XXX)

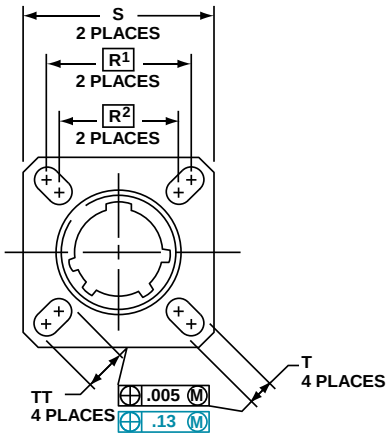

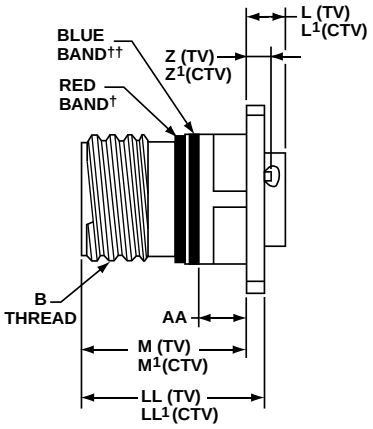

PANEL HOLE DIMENSIONS

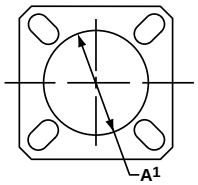

BACK PANEL MOUNTING

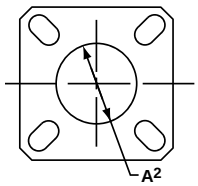

FRONT PANEL MOUNTING

† Red band indicates fully mated

†† Blue band indicates rear release contact retention system

Consult Amphenol Aerospace for availability of composite box mount receptacles.

Inches

Shell Size	MS Shell Size Code	B Thread Class 2A 0.1P=0.3L-TS (Plated)	L Max. (TV)	L1 Max. (CTV)	M +.000 –.005 (TV)	M1 +.000 –.005 (CTV)	R1	R2	S Max.	T ±.008	Z. Max. (TV)	Z1 Max. (CTV)	A1 Back Panel Mount	A2 Front Panel Mount	AA Max. Panel Thick-ness	LL +.006 –.000 (TV)	LL1 ±.005 (CTV)	TT ±.008
9	A	.6250	.205	.250	.820	.773	.719	.594	.948	.128	.153	.198	.650	.510	.234	.905	.908	.216
11	B	.7500	.205	.250	.820	.773	.812	.719	1.043	.128	.153	.198	.800	.620	.234	.905	.908	.194
13	C	.8750	.205	.250	.820	.773	.906	.812	1.137	.128	.153	.198	.910	.740	.234	.905	.908	.194
15	D	1.0000	.205	.250	.820	.773	.969	.906	1.232	.128	.153	.198	1.040	.900	.234	.905	.908	.173
17	E	1.1875	.205	.250	.820	.773	1.062	.969	1.323	.128	.153	.198	1.210	1.010	.234	.905	.908	.194
19	F	1.2500	.205	.250	.820	.773	1.156	1.062	1.449	.128	.153	.198	1.280	1.130	.234	.905	.908	.194
21	G	1.3750	.235	.280	.790	.741	1.250	1.156	1.575	.128	.183	.228	1.410	1.250	.204	.905	.904	.194
23	H	1.5000	.235	.280	.790	.741	1.375	1.250	1.701	.154	.183	.228	1.530	1.360	.204	.905	.904	.242
25	J	1.6250	.235	.280	.790	.741	1.500	1.375	1.823	.154	.183	.228	1.660	1.470	.204	.905	.904	.242

Millimeters

Shell Size	MS Shell Size Code	L Max. (TV)	L1 Max. (CTV)	M +.00 –.13 (TV)	M1 +.00 –.13 (CTV)	R1	R2	S Max.	T ±.20	Z. Max. (TV)	Z1 Max. (CTV)	A1 Back Panel Mount	A2 Front Panel Mount	AA Max.	LL +.15 –.00 (TV)	LL1 ±.13 (CTV)	TT ±.20
9	A	5.21	6.35	20.83	19.63	18.26	15.09	24.1	3.25	3.89	5.03	16.66	13.11	5.94	22.99	23.06	5.49
11	B	5.21	6.35	20.83	19.63	20.62	18.26	26.5	3.25	3.89	5.03	20.22	15.88	5.94	22.99	23.06	4.93
13	C	5.21	6.35	20.83	19.63	23.01	20.62	28.9	3.25	3.89	5.03	23.42	19.05	5.94	22.99	23.06	4.93
15	D	5.21	6.35	20.83	19.63	24.61	23.01	31.3	3.25	3.89	5.03	26.59	23.01	5.94	22.99	23.06	4.39
17	E	5.21	6.35	20.83	19.63	26.97	24.61	33.7	3.25	3.89	5.03	30.96	25.81	5.94	22.99	23.06	4.93
19	F	5.21	6.35	20.83	19.63	29.36	26.97	36.9	3.25	3.89	5.03	32.94	28.98	5.94	22.99	23.06	4.93
21	G	5.97	7.11	20.07	18.82	31.75	29.36	40.1	3.25	4.65	5.79	36.12	32.16	5.18	22.99	22.96	4.93
23	H	5.97	7.11	20.07	18.82	34.92	31.75	43.3	3.91	4.65	5.79	39.29	34.93	5.18	22.99	22.96	6.15
25	J	5.97	7.11	20.07	18.82	38.10	34.92	46.4	3.91	4.65	5.79	42.47	37.69	5.18	22.99	22.96	6.15

All dimensions for reference only

Designates true position dimensioning

TV06R (D38999/26) – Crimp, Metal
CTV06R (D38999/26) – Crimp, Composite

Straight Plug

PART #

To complete, see how to order pages 22-24.

Connector Type	Shell Style	Service Class	Shell Size & Insert Arrg	Contact Type	Alternate Position	Special Variations
TV	06	RW	9-35	P	B	(453)
TVS	06	RK	X-X	X	X	(XXX)
TVS	06	RF	X-X	X	X	(XXX)
TVS	06	RS	X-X	X	X	(XXX)
CTV	06	RW	X-X	X	X	(XXX)
CTVS	06	RF	X-X	X	X	(XXX)
D38999/	26	X	X-X	X	X	NA

METAL

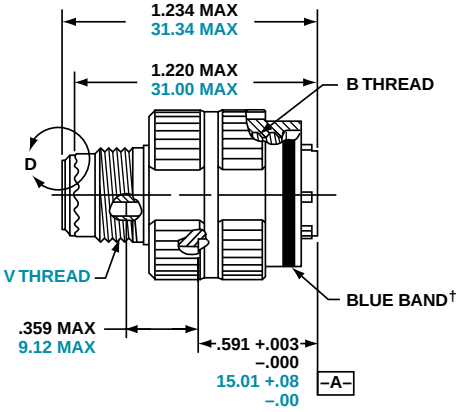

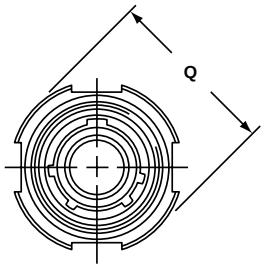

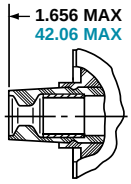

COMPOSITE

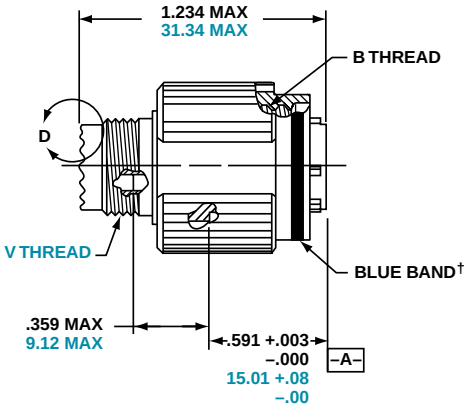

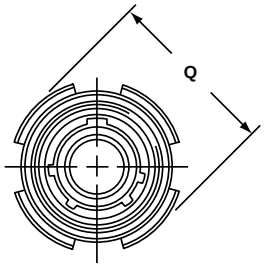

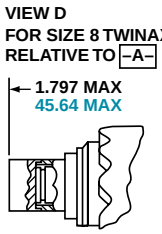

† Blue band indicates rear release contact retention system

Inches

Shell Size	MS Shell Size Code	B Thread 0.1P-0.3L-TS-2B (Plated)	Q Dia. Max.
9	A	.6250	.858
11	B	.7500	.984
13	C	.8750	1.157
15	D	1.0000	1.280
17	E	1.1875	1.406
19	F	1.2500	1.516
21	G	1.3750	1.642
23	H	1.5000	1.768
25	J	1.6250	1.890

Millimeters

Shell Size	MS Shell Size Code	Q Max.	V Thread Metric
9	A	21.8	M12X1-6g
11	B	25.0	M15X1-6g
13	C	29.4	M18X1-6g
15	D	32.5	M22X1-6g
17	E	35.7	M25X1-6g
19	F	38.5	M28X1-6g
21	G	41.7	M31X1-6g
23	H	44.9	M34X1-6g
25	J	48.0	M37X1-6g

All dimensions for reference only.

Amphenol Aerospace

For High Vibration Applications

PART

To complete, see how to order pages 22-24.

Connector Type	Shell Style	Service Class	Shell Size & Insert Arrg	Contact Type	Alternate Position	Special Variations
TV	26	RK	9-35	P	N	(453)
TV	26	RS	X-X	X	N	(XXX)
MTV	26	RK	X-X	X	N	(XXX)
MTV	26	RS	X-X	X	N	(XXX)

For parts with MS Stamping use MTV26( ) part number as shown above.

Designed for high vibration and harsh environments such as aircraft gas turbine engines, the CLUTCH-LOK is also an ideal choice for demanding applications such as aircraft, space and military ground vehicles. The unique clutch design of the Amphenol CLUTCH-LOK means that you don't have to compromise the need for quick, smooth mating of plugs and receptacles in order to get increased uncoupling torque.

The CLUTCH-LOK has proven to not only remain mated and pass all the Series III specification requirements, it also has proven to actually tighten itself under vibration. This is a powerful advantage over the traditionally high vibration application connectors. The CLUTCH-LOK is also a tremendous advantage in inaccessible, hard to reach areas where mating torque is difficult to apply and complete coupling is not verifiable by inspection.

CLUTCH-LOK features and benefits:

- High degree of differential torque
- Infinite free coupling and positive metal-to-metal bottoming with each mating
- No settling back to the next ratchet tooth
- Available with stainless steel shells and Class K firewall inserts
- All the advantages of MIL-DTL-38999 Series III including EMI/RFI shielding, electrolytic erosion resistance and contact protection with recessed pins
- Enhanced connector performance at affordable prices
- Completely intermateable with all existing MIL-DTL-38999 Series III connectors
- Fully QPL'd

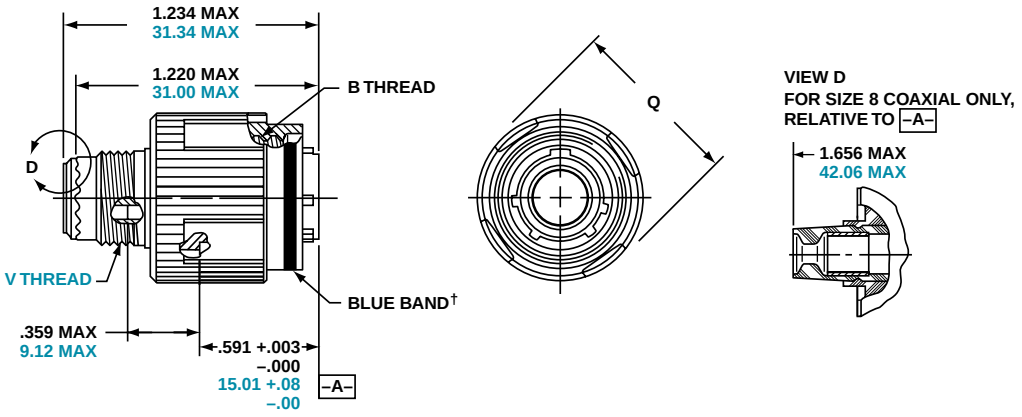

† Blue band indicates rear release contact retention system

Inches

Shell Size	MS Shell Size Code	B Thread 0.1P-0.3L-TS-2B (Plated)	Q Dia. Max.
9	A	.6250	.858
11	B	.7500	.984
13	C	.8750	1.157
15	D	1.0000	1.280
17	E	1.1875	1.406
19	F	1.2500	1.516
21	G	1.3750	1.642
23	H	1.5000	1.768
25	J	1.6250	1.890

Millimeters

Shell Size	MS Shell Size Code	Q Max.	V Thread Metric
9	A	21.8	M12X1-6g
11	B	25.0	M15X1-6g
13	C	29.4	M18X1-6g
15	D	32.5	M22X1-6g
17	E	35.7	M25X1-6g
19	F	38.5	M28X1-6g
21	G	41.7	M31X1-6g
23	H	44.9	M34X1-6g
25	J	48.0	M37X1-6g

All dimensions for reference only.

TV07R (D38999/24) – Crimp, Metal
CTV07R (D38999/24) – Crimp, Composite
Jam Nut Receptacle

PART #

To complete, see how to order pages 22-24.

Connector Type	Shell Style	Service Class	Shell Size & Insert Arrg	Contact Type	Alternate Position	Special Variations
TV	07	RW	9-35	P	B	(453)
TVS	07	RK	X-X	X	X	(XXX)
TVS	07	RF	X-X	X	X	(XXX)
TVS	07	RS	X-X	X	X	(XXX)
CTV	07	RW	X-X	X	X	(XXX)
CTVS	07	RF	X-X	X	X	(XXX)
D38999/	24	X	X-X	X	X	NA

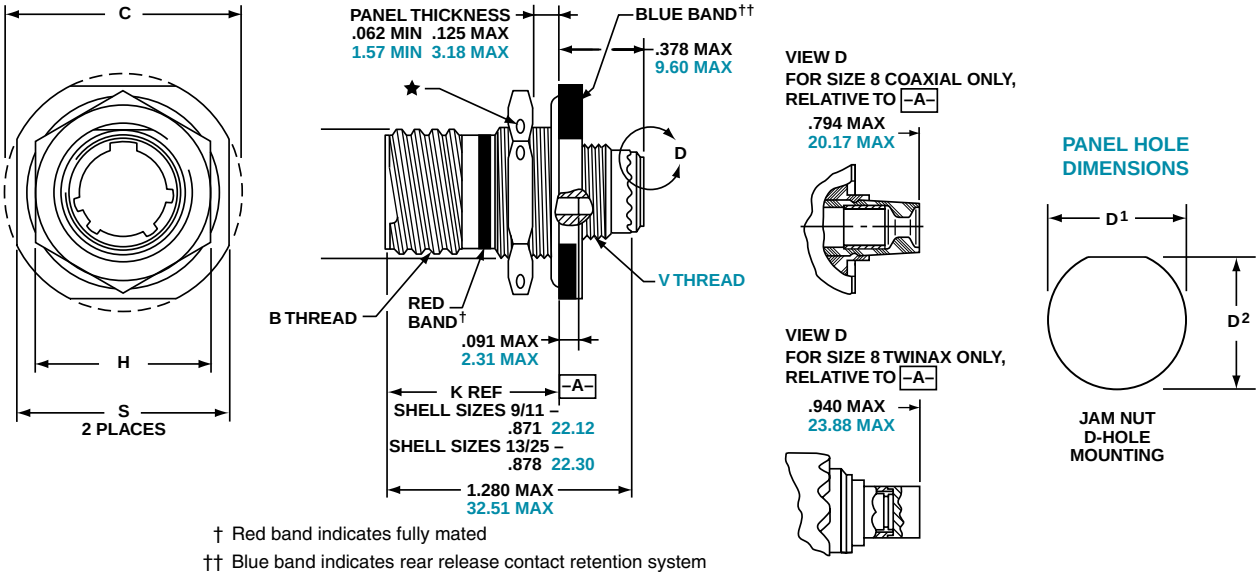

† Red band indicates fully mated

†† Blue band indicates rear release contact retention system

★ .059 dia min.
1.5 dia min., 3 lockwire holes Formed lockwire hole design (6 holes) is optional

Inches

Shell Size	MS Shell Size Code	B Thread Class 2A 0.1P-0.3L-TS (Plated)	C Max.	D¹ +.010 –.000	D² +.000 –.010	H Hex +.017 –.016	S ±.010
9	A	.6250	1.199	.700	.670	.875	1.062
11	B	.7500	1.386	.825	.770	1.000	1.250
13	C	.8750	1.511	1.010	.955	1.188	1.375
15	D	1.0000	1.636	1.135	1.085	1.312	1.500
17	E	1.1875	1.761	1.260	1.210	1.438	1.625
19	F	1.2500	1.949	1.385	1.335	1.562	1.812
21	G	1.3750	2.073	1.510	1.460	1.688	1.938
23	H	1.5000	2.199	1.635	1.585	1.812	2.062
25	J	1.6250	2.323	1.760	1.710	2.000	2.188

Millimeters

Shell Size	MS Shell Size Code	C Max.	D¹ +.25 –.00	D² +.00 –.25	H Hex +.43 –.41	S ±.25	V Thread Metric
9	A	30.45	17.78	17.02	22.23	26.97	M12X1-6g
11	B	35.20	20.96	19.59	25.40	31.75	M15X1-6g
13	C	38.38	25.65	24.26	30.18	34.93	M18X1-6g
15	D	41.55	28.83	27.56	33.32	38.10	M22X1-6g
17	E	44.73	32.01	30.73	36.53	41.28	M25X1-6g
19	F	49.50	35.18	33.91	39.67	46.02	M28X1-6g
21	G	52.65	38.35	37.08	42.80	49.23	M31X1-6g
23	H	55.85	41.53	40.26	46.02	52.37	M34X1-6g
25	J	59.00	44.70	43.43	50.80	55.58	M37X1-6g

All dimensions for reference only NOTE: Deep reach receptacles are available for panel thicknesses up to .750 max.

Line Receptacle

PART #

To complete, see how to order pages 22-24.

Connector Type	Shell Style	Service Class	Shell Size & Insert Arrg	Contact Type	Alternate Position	Special Variations
TV	01	RW	9-35	P	B	(453)
TVS	01	RF	X-X	X	X	(XXX)
CTV	01	RW	X-X	X	X	(XXX)
CTVS	01	RF	X-X	X	X	(XXX)

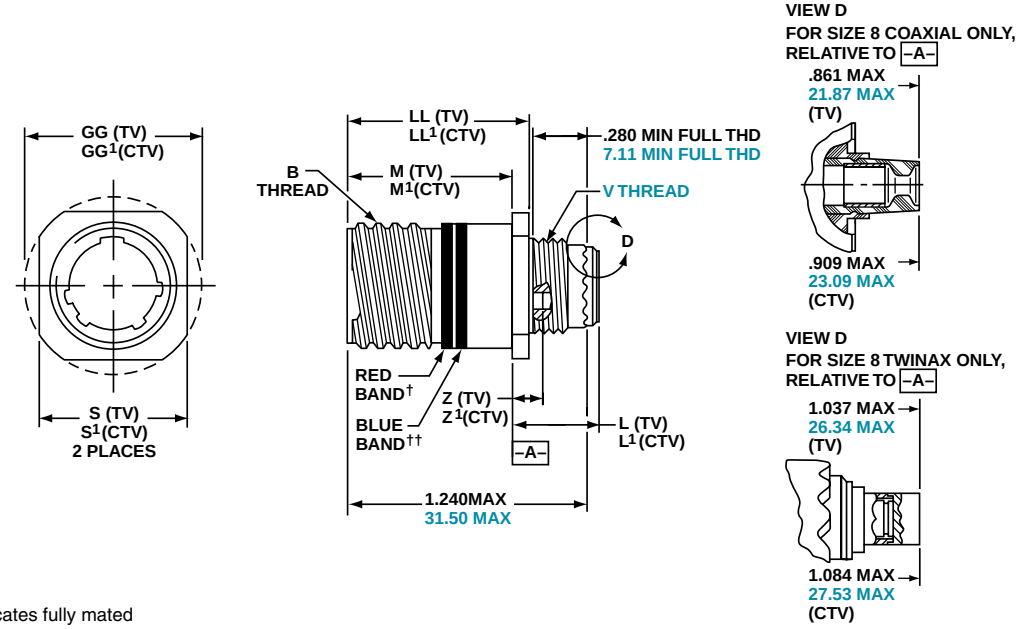

† Red band indicates fully mated

†† Blue band indicates rear release contact retention system

Inches

Shell Size	MS Shell Size Code	B Thread 0.1P-0.3L-TS-2A (Plated)	M +.000 –.005 (TV)	M1 +.000 –.005 (CTV)	L Max. (TV)	L1 Max. (CTV)	S ±.010 (TV)	S1 ±.010 (CTV)	Z Max (TV)	Z1 Max (CTV)	GG ±.010 (TV)	GG1 ±.010 (CTV)	LL +.006 –.000 (TV)	LL1 ±.005 (CTV)
9	A	.6250	.820	.773	.469	.514	.675	.635	.153	.198	.812	.699	.905	.908
11	B	.7500	.820	.773	.469	.514	.800	.765	.153	.198	.905	.875	.905	.908
13	C	.8750	.820	.773	.469	.514	.925	.885	.153	.198	1.093	1.007	.905	.908
15	D	1.0000	.820	.773	.469	.514	1.050	1.100	.153	.198	1.219	1.140	.905	.908
17	E	1.1875	.820	.773	.469	.514	1.238	1.197	.153	.198	1.375	1.229	.905	.908
19	F	1.2500	.820	.773	.469	.514	1.300	1.260	.153	.198	1.469	1.380	.905	.908
21	G	1.3750	.790	.741	.500	.545	1.425	1.385	.183	.228	1.625	1.493	.905	.904
23	H	1.5000	.790	.741	.500	.545	1.550	1.510	.183	.228	1.750	1.626	.905	.904
25	J	1.6250	.790	.741	.500	.545	1.675	1.635	.183	.228	1.875	1.777	.905	.904

Millimeters

Shell Size	MS Shell Size Code	M +.00–.013 (TV)	M1 +.00 –.13 (CTV)	L Max. (TV)	L1 Max. (CTV)	S ±.25 (TV)	S1 ±.010 (CTV)	V Thread Metric	Z Max (TV)	Z1 Max (CTV)	GG ±.25 (TV)	GG1 ±.25 (CTV)	LL +.15 –.00 (TV)	LL1 ±.13 (CTV)
9	A	20.83	19.63	11.91	13.06	17.15	16.13	M12X1-6g	3.89	5.03	20.62	17.75	22.99	23.06
11	B	20.83	19.63	11.91	13.06	20.32	19.43	M15X1-6g	3.89	5.03	22.99	22.22	22.99	23.06
13	C	20.83	19.63	11.91	13.06	23.50	22.47	M18X1-6g	3.89	5.03	27.76	25.57	22.99	23.06
15	D	20.83	19.63	11.91	13.06	26.67	27.94	M22X1-6g	3.89	5.03	30.96	28.95	22.99	23.06
17	E	20.83	19.63	11.91	13.06	31.45	30.40	M25X1-6g	3.89	5.03	34.93	31.21	22.99	23.06
19	F	20.83	19.63	11.91	13.06	33.02	32.00	M28X1-6g	3.89	5.03	37.31	35.05	22.99	23.06
21	G	20.07	18.82	12.70	13.84	36.20	35.18	M31X1-6g	4.65	5.79	41.28	37.92	22.99	22.96
23	H	20.07	18.82	12.70	13.84	39.37	38.35	M34X1-6g	4.65	5.79	44.45	41.30	22.99	22.96
25	J	20.07	18.82	12.70	13.84	42.55	41.53	M37X1-6g	4.65	5.79	47.63	45.13	22.99	22.96

All dimensions for reference only

PART #
To complete, see how to order pages 22-24.

Connector Type	Shell Style	Service Class	Shell Size & Insert Arrg	Contact Type	Alternate Position	Special Variations
TV	09	RW	9-35	P	B	(453)
TVS	09	RF	X-X	X	X	(XXX)

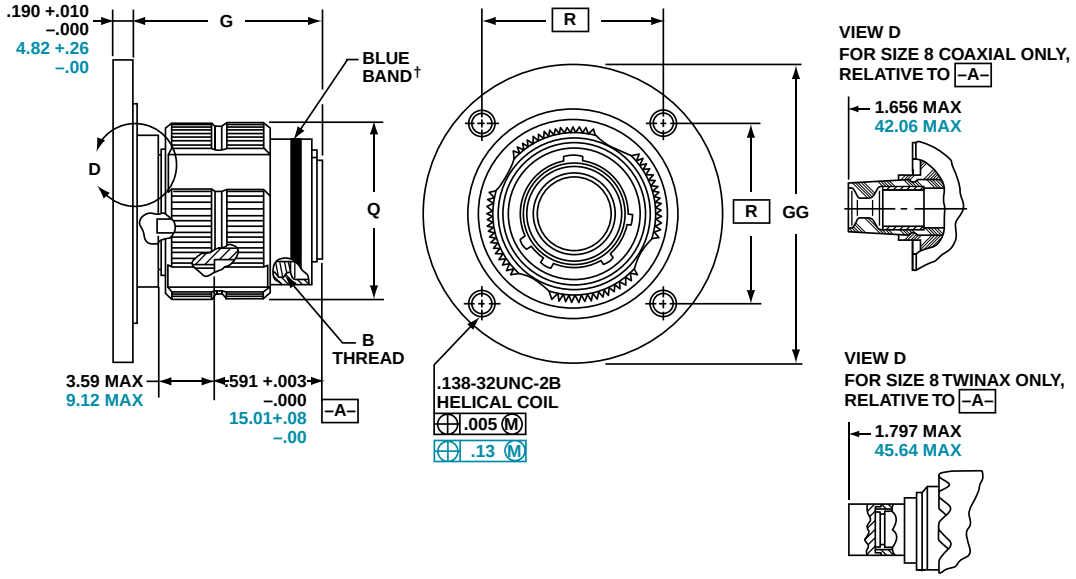

† Blue band indicates rear release contact retention system

Inches

Shell Size	MS Shell Size Coded	B Thread 0.1P-0.3L-TS-2A (Plated)	G ±.060	Q Dia. Max	R	GG Dia ±.005
9**	A	.6250	1.106	.859	1.038	1.838
11	B	.7500	1.106	.969	1.115	1.948
13**	C	.8750	1.106	1.141	1.240	2.124
15	D	1.0000	1.106	1.266	1.327	2.248
17	E	1.1875	1.106	1.391	1.417	2.375
19	F	1.2500	1.356	1.500	1.557	2.495
21	G	1.3750	1.356	1.625	1.624	2.568
23	H	1.5000	1.356	1.750	1.713	2.723
25	J	1.6250	1.356	1.875	1.801	2.848

Millimeters

Shell Size	MS Shell Size Coded	G ±1.52	Q Dia. Max	R	GG Dia ±.13
9**	A	28.09	21.82	26.37	46.69
11	B	28.09	24.62	28.32	49.48
13**	C	28.09	28.98	31.50	53.95
15	D	28.09	32.16	33.71	57.10
17	E	28.09	35.33	35.99	60.33
19	F	34.44	38.10	39.55	63.37
21	G	34.44	41.28	41.25	65.23
23	H	34.44	44.45	43.51	69.16
25	J	34.44	47.63	45.75	72.34

All dimensions for reference only
** Partially tooled. Consult Amphenol Aerospace for availability

□ Designates true position dimensioning

Box Mounting Receptacle

PART #
To complete, see how to order pages 22-24.

Connector Type	Shell Style	Service Class	Shell Size & Insert Arrg	Contact Type	Alternate Position	Special Variations
TVPS	02	Y	9-35	P	B	(453)
TVPS	02	YN	X-X	X	X	(XXX)
D38999/	21	X	X-X	X	X	NA

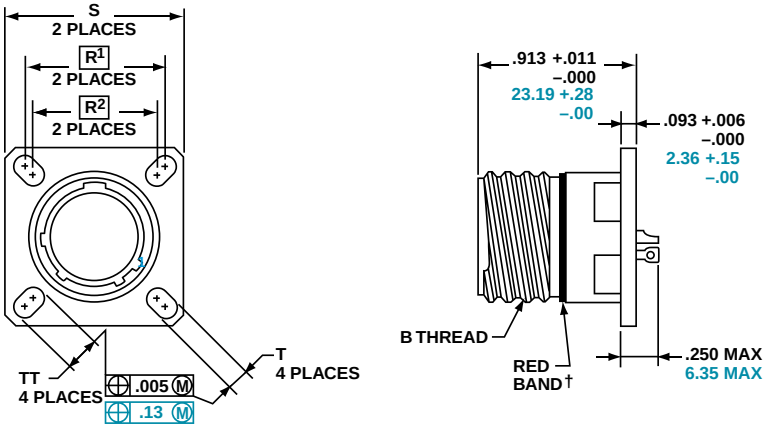

† Red band indicates fully mated

NOTE: Consult Amphenol Aerospace for availability of non-glass-sealed versions with printed circuit tail contacts.

Inches

Shell Size	MS Shell Size Coded	B Thread 0.1P-0.3L-TS (Plated)	R1	R2	S ±.010	T ±.008	TT ±.008
9	A	.6250	.719	.594	.938	.128	.216
11	B	.7500	.812	.719	1.031	.128	.194
13	C	.8750	.906	.812	1.125	.128	.194
15	D	1.0000	.969	.906	1.219	.128	.173
17	E	1.1875	1.062	.969	1.312	.128	.194
19	F	1.2500	1.156	1.062	1.438	.128	.194
21	G	1.3750	1.250	1.156	1.562	.128	.194
23	H	1.5000	1.375	1.250	1.688	.154	.242
25	J	1.6250	1.500	1.375	1.812	.154	.242

Millimeters

Shell Size	MS Shell Size Coded	R1	R2	S ±.25	T ±.20	TT ±.20
9	A	18.26	15.09	23.83	3.25	5.49
11	B	20.62	18.26	26.19	3.25	4.93
13	C	23.01	20.62	28.58	3.25	4.93
15	D	24.61	23.01	30.96	3.25	4.39
17	E	26.97	24.61	33.32	3.25	4.93
19	F	29.36	26.97	36.53	3.25	4.93
21	G	31.75	29.36	39.67	3.25	4.93
23	H	34.93	31.75	42.88	3.91	6.15
25	J	38.10	34.93	46.02	3.91	6.15

All dimensions for reference only

☐ Designates true position dimensioning

Jam Nut Receptacle

PART #

To complete, see how to order pages 22-24.

Connector Type	Shell Style	Service Class	Shell Size & Insert Arrg	Contact Type	Alternate Position	Special Variations
TVS	07	Y	9-35	P	B	(453)
TVS	07	YN	X-X	X	X	(XXX)
D38999/	23	X	X-X	X	X	NA

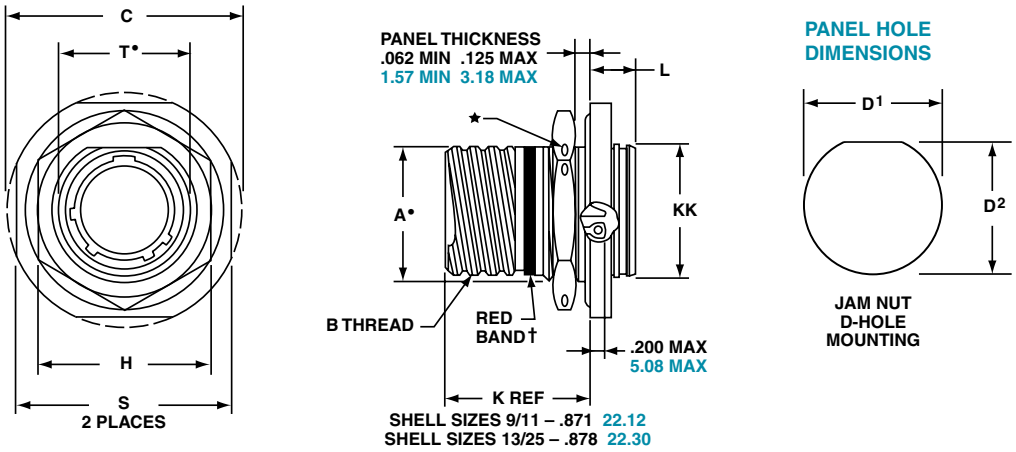

† Red band indicates fully mated

★ . 059 dia min.
1.5 dia min. 3 lockwire holes
Formed lockwire hole design (6 holes) is optional.

Inches

Shell Size	MS Shell Size code	A• +.000 –.010	B Thread Class 2A 0.1P-0.3L-TS (Plated)	C Max	D¹ +.010 –.000	D² +.000 –.010	H Hex +.017 –.016	L Max	S ±.010	T• +.010 –.000	KK +.011 –.000
9	A	.669	.6250	1.199	.700	.670	.875	.357	1.062	.697	.642
11	B	.769	.7500	1.386	.825	.770	1.000	.357	1.250	.822	.766
13	C	.955	.8750	1.511	1.010	.955	1.188	.357	1.375	1.007	.892
15	D	1.084	1.0000	1.636	1.135	1.085	1.312	.357	1.500	1.134	1.018
17	E	1.208	1.1875	1.761	1.260	1.210	1.438	.357	1.625	1.259	1.142
19	F	1.333	1.2500	1.949	1.385	1.335	1.562	.381	1.812	1.384	1.268
21	G	1.459	1.3750	2.073	1.510	1.460	1.688	.381	1.938	1.507	1.392
23	H	1.575	1.5000	2.199	1.635	1.585	1.812	.381	2.062	1.634	1.518
25	J	1.709	1.6250	2.323	1.760	1.710	2.000	.381	2.188	1.759	1.642

Millimeters

Shell Size	MS Shell Size code	A• +.00 –.25	C Max	D¹ +.25 –.00	D² +.00 –.25	H Hex +.43 –.41	L Max	S ±.25	T• +.25 –.00	KK +.28 –.00
9	A	16.99	30.45	17.78	17.02	22.23	9.07	26.97	17.70	16.31
11	B	19.53	35.20	20.96	19.59	25.40	9.07	31.75	20.88	19.46
13	C	24.26	38.38	25.65	24.26	30.18	9.07	34.93	25.58	22.66
15	D	27.53	41.55	28.83	27.56	33.32	9.07	38.10	28.80	25.86
17	E	30.68	44.73	32.01	30.73	36.53	9.07	41.28	31.98	29.01
19	F	33.86	49.50	35.18	33.91	39.67	9.68	46.02	35.15	32.21
21	G	37.06	52.65	38.35	37.08	42.80	9.68	49.23	38.28	35.36
23	H	40.01	55.85	41.53	40.26	46.02	9.68	52.37	41.50	38.56
25	J	43.41	59.00	44.70	43.43	50.80	9.68	55.58	44.68	41.71

All dimensions for reference only

• D shaped panel cut-out dimensions

Amphenol Aerospace

Solder Mounting Receptacle

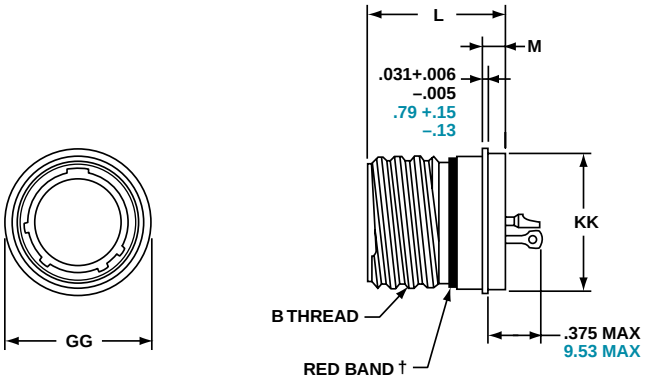

PART #

To complete, see how to order pages 22-24.

Connector Type	Shell Style	Service Class	Shell Size & Insert Arrg	Contact Type	Alternate Position	Special Variations
TVS	I	Y	9-35	P	B	(453)
TVS	I	YN	X-X	X	X	(XXX)
D38999/	25	X	X-X	X	X	NA

† Red band indicates fully mated

Inches

Shell Size	MS Shell Size Code	B Thread Class 2A 0.1P-0.3L-TS (Plated)	L +.011 –.005	M +.006 –.005	GG Dia. +.011 –.010	KK Dia +.011 –.005
9	A	.6250	.806	.125	.750	.672
11	B	.7500	.806	.125	.844	.781
13	C	.8750	.806	.125	.969	.906
15	D	1.0000	.806	.125	1.094	1.031
17	E	1.1875	.806	.125	1.218	1.156
19	F	1.2500	.806	.125	1.312	1.250
21	G	1.3750	.806	.125	1.438	1.375
23	H	1.5000	.838	.156	1.563	1.500
25	J	1.6250	.838	.156	1.688	1.625

Millimeters

Shell Size	MS Shell Size Code	L +.28 –.00	M +.15 –.13	GG Dia. +.28 –.25	KK Dia +.03 –.13
9	A	20.47	3.18	19.05	17.07
11	B	20.47	3.18	21.44	19.84
13	C	20.47	3.18	24.61	23.01
15	D	20.47	3.18	27.79	26.19
17	E	20.47	3.18	30.94	29.36
19	F	20.47	3.18	33.32	31.75
21	G	20.47	3.18	36.53	34.93
23	H	21.29	3.96	39.70	38.10
25	J	21.29	3.96	42.88	41.28

TVSHIY (D38999/27) – Hermetic, Stainless Steel

Weld Mounting Receptacle

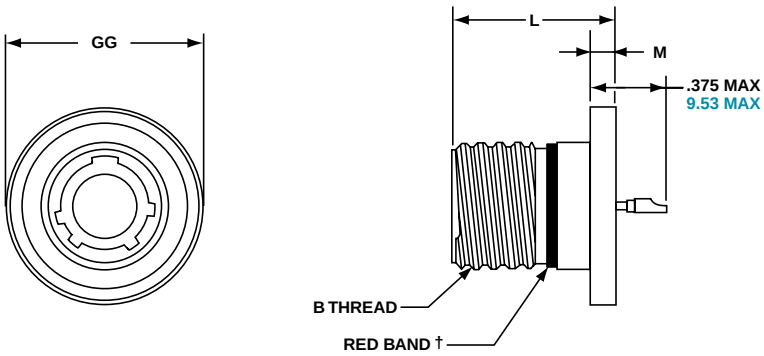

PART #

To complete, see how to order pages 22-24.

Connector Type	Shell Style	Service Class	Shell Size & Insert Arrg	Contact Type	Alternate Position	Special Variations
TVS	HI	Y	9-35	P	B	(453)
TVS	HI	YN	X-X	X	X	(XXX)
D38999/	27	X	X-X	X	X	NA

† Red band indicates fully mated

Inches

Shell Size	MS Shell Size Code	B Thread Class 2A 0.1P-0.3L-TS (Plated)	L +.011 –.000	M +.006 –.005	GG Dia. +.011 –.010
9	A	.6250	.806	.125	.973
11	B	.7500	.806	.125	1.095
13	C	.8750	.806	.125	1.221
15	D	1.0000	.806	.125	1.347
17	E	1.1875	.806	.125	1.434
19	F	1.2500	.806	.125	1.579
21	G	1.3750	.806	.125	1.721
23	H	1.5000	.838	.156	1.886
25	J	1.6250	.838	.156	1.973

Millimeters

Shell Size	MS Shell Size Code	L +.28 –.00	M +.15 –.13	GG Dia. +.25 –.00
9	A	20.47	3.18	24.71
11	B	20.47	3.18	27.81
13	C	20.47	3.18	31.01
15	D	20.47	3.18	34.21
17	E	20.47	3.18	36.42
19	F	20.47	3.18	40.11
21	G	20.47	3.18	43.71
23	H	21.29	3.96	47.90
25	J	21.29	3.96	50.11

All dimensions for reference only

Series III, TV Breakaway Fail Safe Connectors
Quick-Disconnect with an Axial Pull of Lanyard

Amphenol® Tri-Start Breakaway Fail Safe Connectors provide unequaled performance in environments requiring instant disengagement.

Designed to provide quick disconnect of a connector plug and receptacle with an axial pull on the lanyard, the "Breakaway" Fail Safe connector family offers a wide range of electrical and mechanical features:

- Instant decoupling and damage free separation
- Completely intermateable with standard receptacles (D38999/20 and /24)
- Inventory support commonality through the use of standard insert arrangements and contacts

Breakaway un-mating is initiated by applying a pull force to the lanyard which causes the operating sleeve on the plug to move away from the receptacle. Coupling segments on the plug then move away from the mating receptacle while expanding, thus releasing the receptacle. After completion of the un-mating sequence, spring compression returns the sleeve and segments to their original positions. Un-mating of the plug may also be accomplished by normal rotation of the coupling ring without affecting the breakaway capability.

Amphenol offers a variety of lanyard plug styles including MIL-STD-1760 types 1, 2 and 6 for Stores Management applications.

The Tri-Start Breakaway Fail Safe connector exceeds the MIL-Spec Series III requirements for EMI/EMP shielding and features include:

- Solid metal-to-metal coupling
- EMI grounding fingers
- Conductive finishes

Amphenol Breakaway Fail Safe connectors are qualified to MIL-DTL-38999/29, /30 and /31 (for MIL-STD-1760 Stores Management applications). In fact, Amphenol offers more qualified Breakaway shell size and insert combinations than any other QPL supplier.

In addition to standard Breakaway connectors, Amphenol also manufactures custom breakaway connectors including those with:

- Highly durable non-metallic operating sleeves in a variety of lengths and diameters
- Increased pull-force capability
- Low-profile designs
- Custom lanyard lengths and backshells
- Low force separation capabilities
- Low insertion/separation force contacts
- Non-cadmium finishes

Whether you need a standard Breakaway, one of our custom Breakaways or, a unique Breakaway design, please contact your local Amphenol representative.

Contact Amphenol Aerospace for more information on breakaway, quick-disconnect connectors. Other Amphenol circular families (MIL-DTL-26482, MIL-DTL-83723) also offer breakaway quick-disconnect connectors.

See accessories for breakaway connectors on page 90.

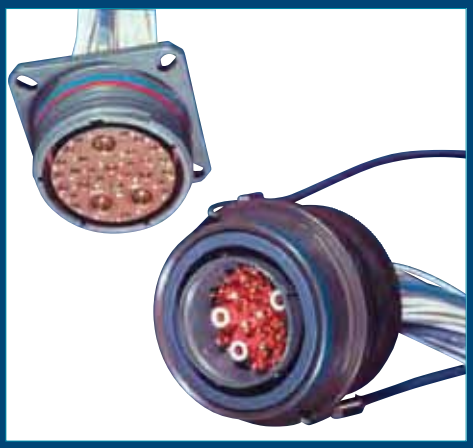

Breakaway with Coax Contacts

Special configuration Fail Safe used on space telescope application. Lanyard is replaced by a swivel ring for remote disconnect and "wing arms" have been added for manual actuation accessibility by gloved astronauts.

Lanyard Release Plug

PART #

To complete, see how to order pages 38-39.

Connector Type	Shell Style	Shell Size & Insert Arrg	Lanyard Length Code	Contact Type/ Alternate Insert Rotation	
D38999	29	29	E	P	(Pins Only)
D38999	30	X-X	X	X	(Sockets Only)
88	5565	X-X	X	X	
91	5565	X-X	X	X	

METAL

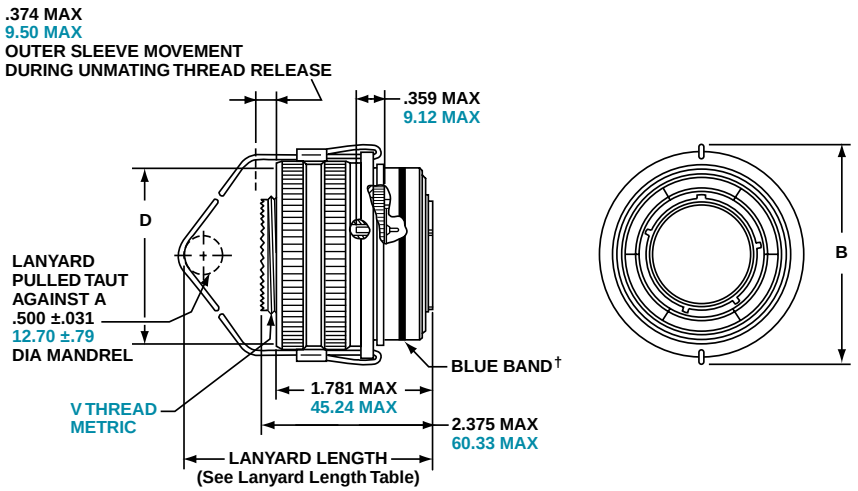

† Blue band indicates rear release contact retention system

Inches

Shell Size	MS Shell Size Code	B Max	D Max Accessory Dia.
11	B	1.846	1.109
13	C	1.972	1.250
15	D	2.079	1.375
17	E	2.205	1.500
19	F	2.301	1.625
21	G	2.472	1.750
23	H	2.594	1.875
25	J	2.705	2.000

Millimeters

Shell Size	MS Shell Size Code	B Max	D Max Accessory Dia.	V Thread Metric
11	B	46.89	28.17	M15X1.0-6g
13	C	50.09	31.75	M18X1.0-6g
15	D	52.81	34.93	M22X1.0-6g
17	E	56.01	38.10	M25X1.0-6g
19	F	58.45	41.28	M28X1.0-6g
21	G	62.79	44.45	M31X1.0-6g
23	H	65.89	47.63	M34X1.0-6g
25	J	68.71	50.08	M37X1.0-6g

All dimensions for reference only

Easy Steps to build a part number... Military

1. DOD Number Prefix	2. Spec Sheet Number	3. Service Class	4. Shell Size	5. Insert Arrangement	6. Lanyard Length Code	7. Alternate Keying Position
D38999/	29	F	E	6	P	N

Step 1. DOD Number Prefix

D38999/ designates MIL-DTL-38999, Series III, Tri-Start Connector

Step 2. Select a Specification Sheet Number

29	Designates Lanyard Release Plug with pin contacts
30	Designates Lanyard Release Plug with socket contacts

Step 3. Select a Service Class

F	Designates electroless nickel plated aluminum, optimum EMI shielding effectiveness –65dB@10 GHz specification min., 48 hour salt spray, 200°C
W	Designates corrosion resistant olive drab cadmium plate aluminum, 500 hour extended salt spray, EMI –50dB@10 GHz specification min., 175°C

Step 4. & 5 Insert Availability

Commercial Basic Part# Shell & Insert Arrg. Code	Shell Size- Insert Arrangement	Military Shell Size- Insert Arrangement	Service Rating	Total Contacts	Contact Size						
					22D	20	16	12	12 Coax	8 Coax	8 Twinax
88/91-55608	11-2	*	I	2			2				
06	11-35	*	M	13	13						
07	11-98	*	I	6		6					
10	13-4	*	I	4			4				
11	13-8	*	I	8		8					
14	13-35	*	M	22	22						
13	13-98	*	I	10		10					
18	15-5	*	II	5			5				
23	15-15	*	I	15		14	1				
22	15-18	*	I	18		18					
19	15-19	*	I	19		19					
20	15-35	*	M	37	37						
21	15-97	*	I	12		8	4				
33	17-2	**E-2**	M	39	38						1
27	17-6	**E-6**	I	6				6			
28	17-8	**E-8**	II	8			8				
29	17-26	**E-26**	I	26		26					
30	17-35	**E-35**	M	55	55						
31	17-99	**E-99**	I	23		21	2				
37	19-11	**F-11**	II	11			11				
41	19-18	**F-18**	M	18	14						4
38	19-28	**F-28**	I	28		26	2				
39	19-32	**F-32**	I	32		32					
40	19-35	**F-35**	M	66	66						
47	21-11	**G-11**	I	11				11			
48	21-16	**G-16**	II	16			16				
49	21-35	**G-35**	M	79	79						
51	21-39	**G-39**	I	39		37	2				
50	21-41	**G-41**	I	41		41					
57	23-21	**H-21**	II	21			21				
58	23-35	**H-35**	M	100	100						
59	23-53	**H-53**	I	53		53					
61	23-54	*	M	53	40		9	4			
60	23-55	*	I	55		55					
71	25-4	**J-4**	I	56		48	8				
63	25-7	**J-7**	M/Twinax	99	97					2	
64	25-8	**J-8**	Twinax	8							8
66	25-19	**J-19**	I	19				19			
74	25-20	**J-20**	N	30		10	13		4		3
72	25-24	**J-24**	I	24			12	12			
67	25-29	**J-29**	I	29			29				
68	25-35	**J-35**	M	128	128						
69	25-43	**J-43**	I	43		23	20				
65	25-46	*	I	46		40	4			2*	
70	25-61	**J-61**	I	61		61					
73	25-90	**J-90**	I	46		40	4			2	

*Not Mil Qualified

Step 6. Military/ Commercial Lanyard Length Code

Table II

Lanyard Length (in.) ± .236	Lanyard Length (mm) ± 6.0	Lanyard Length Code For Part Number
4.016	102	A
4.528	115	B
5.000	127	C
5.512	140	D
6.024	153	E
6.535	166	F
7.008	178	G
7.520	191	H
7.992	203	I
8.503	216	J
9.016	229	K
9.528	242	L
10.000	254	M
10.512	267	N
11.024	280	P
11.535	293	R
12.008	305	S
12.520	318	T
13.031	331	U
14.016	356	V
15.000	381	W
16.024	407	X
17.008	432	Y
18.031	458	Z

Step 7. Military Alternate Keying Position

For alternate positions of connector (to prevent cross-mating) see alternate positioning on page 24. (N indicates normal)

Easy Steps to build a part number... Commercial

FAIL SAFE 88-5565( ) & 91-5565( )

Ordering procedure for example part number 88-556529-EP is shown below:

1. Service Class	2. Connector Type Identification	3. Shell Size & Insert Arrg. Code	4. Required Field	5. Lanyard Length Code	6. Contact Type/Alternate Keying Position
88	5565	29	0	E	P

Step 1. Select a Service Class

88	Designates corrosion resistant olive drab cadmium plate over nickel, 500 hour extended salt spray, EMI –50dB @ 10 GHz specification min., 175°C
91	Designates electroless nickel plated aluminum, optimum EMI shielding effectiveness –65dB @ 10 GHz specification min., 48 hour salt spray, 200°C

These are standard finishes. Consult Amphenol Aerospace, Sidney, NY for other variations.

Step 2. Select a Connector Type Identification

5565	Designates MIL-DTL-38999, Series III Tri-Start Lanyard Release Plug

Step 3. Select a Commercial Shell Size & Insert Arrangement Code

MIL-DTL-38999, see insert availability chart on page 38.

Step 4. Required Field

0	The required field is always a 0

Step 5. Select a Lanyard Length Code

See Table II (to the left) for lanyard length code number.

Step 6. Select a Contact Type/Alternate Keying Position

P designates pin, S designates socket for normal positioning of contacts. When an alternate position of the connector is required to prevent cross-mating, a different letter (other than P or S) is used. See alternate positioning on page 24, then convert to Amphenol Commercial coding by the following chart.

Pin Contacts		Socket Contacts	
MS Letter	Amphenol letter	MS Letter	Amphenol Letter
PN	P (normal)	SN	S (normal)
PA	G	SA	H
PB	I	SB	J
PC	K	SC	L
PD	M	SD	N
PE	R	SE	T

D38999/31 for MIL-STD-1760 – Series III
TV Breakaway Fail Safe – Crimp, Metal
Lanyard Release Plug

PIN CONTACTS ONLY,
SHELL SIZE 25 ONLY

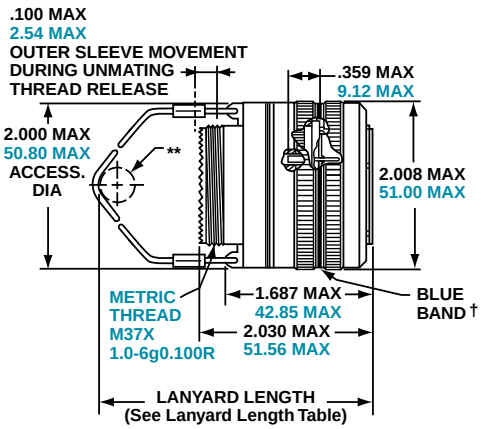

TYPE 6

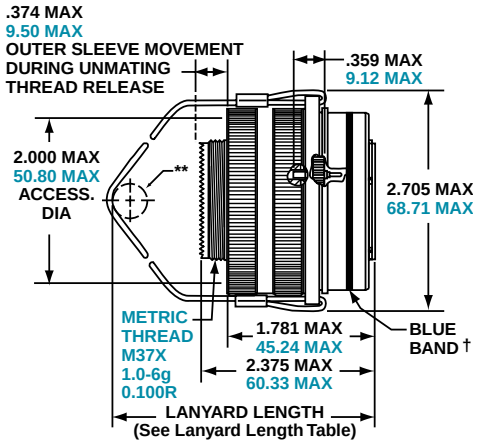

TYPE 2

***Part number reference.**
To complete, see how to order page 41.

D38999/31

88-555875/76
91-555875/76 — **Type 6**

88-558518/19
91-558518/19 — **Type 2**

T3W-16B25-XXXX — Type 1

*To order by Commercial Part numbers consult Amphenol.

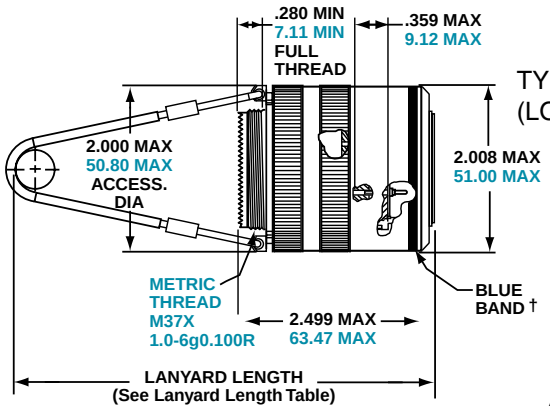

TYPE 1
(LONGER SHELL)

† Blue band indicates rear release contact retention system
** Lanyard pulled taut against a .500 ± .13 dia. Mandrel
All dimensions for reference only

Tri-Start Lanyard Separation Forces		
Shell Size	**Straight Plug (lbs. max.)**	**15 Degree Pull (lbs. max.)**
25	90	100

Pin Contact Data for MIL-STD-1760

Insert Arrangement	Service Rating	Total Contacts	Contact			
			20	16	12 (Coax)	8 (Twinax)
25-20	N	30	10	13	4	3

Contacts for 25-20 Pattern

Shell Size	Arrg. Number	Number of Contacts	Size Contacts	Service Rating	Contact Location	Standard Contacts	
						Pin	Socket
25	-20	3	8	Twinax	A, H, K	M39029/90-529	M39029/91-530
		4	12	Coax	2,3	M39029/28-211	M39029/75-416
					W, 5	M39029/102-558	M39029/103-559
		13	16	N	C, D, E, F, J, M, N, P, R, T, U, Y, Z	M39029/58-364	M39029/56-352
		10	20	N	B, G, L, S, V, X, 1, 4, 6, 7	M39029/58-363	M39029/56-351

Insert Arrangement	Service Rating	Total Contacts	Contact Size	
			20	10 (power)
25-11	N	11	2	9

INSERT AVAILABILITY
FAIL SAFE D38999/31
FOR MIL-STD-1760

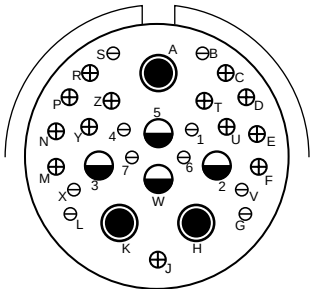

25-20
Primary Interface Signal Set

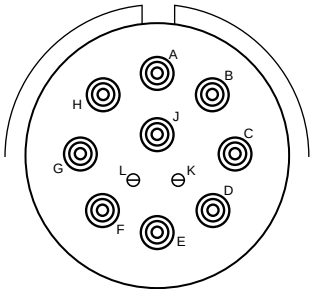

25-11
Auxiliary Power Signal Set

Contact Legend

8 (twinax) 10 (power) 12 (coax) 16 20

Applications- Lanyard Release Plug

HOW TO ORDER - BY MILITARY PART NUMBER FAIL SAFE D38999/31

Ordering procedure for example part number D38999/31WE20PN1 is shown below:

Easy Steps to build a part number... Military

1. DOD Number Prefix	2. Spec Sheet Number	3. Service Class	4. Lanyard Length Code	5. Insert Arrangement	6. Contact Style	7. Alternate Keying Position	8. Type Number
D38999/	31	W	E	20	P	N	1

1. Select a DOD Number Prefix

	Designates
D38999/	MIL-DTL-38999, Series III Tri-Start Connectors

2. Specification Sheet Number

	Designates
31	Designates Lanyard Release Plug for MIL-STD-1760 with pin contacts

3. Select a Service Class

	Designates
F	Electroless nickel plated aluminum, optimum EMI shielding effectiveness –65dB @ 10 GHz specification min., 48 hour salt spray, 200°C
W	Corrosion resistant olive drab cadmium plate aluminum, 500 hour extended salt spray, EMI –50dB @ 10 GHz specification min., 175°C

4. Select a Lanyard Length Code

Lanyard Length (in.) ±.236	Lanyard Length (mm.) ± 6.0	Lanyard Length Code for Part Number
6.024	153.0	E
6.535	166.0	F
7.008	178.0	G
7.520	191.0	H
7.992	203.0	I
8.504	216.0	J
9.016	229.0	K
9.528	242.0	L

5. Select an Insert Arrangement

Only 11 or 20 are available contact arrangement numbers. See page 40.

6. Contact Style – P & A are Valid Options

	Designates
P	Replaces the "no designation" option in the PIN on revision C and earlier revision of the Mil-Spec.
A	Designates supplied less contacts.

7. Alternate Keying Position

	Designates
N	Is required for normal position.

8. Type Number

Type 1, 2 or 6. See drawings on page 40.

For accessories for lanyard release plugs see page 90.

D38999 Type Hybrid Breakaway – Series III

Crimp, Metal Shell with Composite Operating Sleeve, And Lower Profile Lanyard Release Plug

New Hybrid Lanyard Breakaway Fail Safe connector with a composite thermoplastic outer operating sleeve for greater durability.

This new hybrid breakaway is the breakaway of choice for the Navy F-18 program.

Amphenol's hybrid lanyard design offers greater durability over D38999 aluminum and composite designs because of its ability to handle abuse taken after weapons release. Other advantages include:

- Lower profile compared to full metal breakaway Fail Safe connectors
- Less weight

This Hybrid Breakaway meets the applicable requirements of MIL-DTL-38999/31 including random & sine vibration, ice resistance, fluid immersion and hydrolytic stability tests. (Test reports are available upon request).

Currently the hybrid breakaway is available in shell sizes 25 and 17. It uses standard inserts available for breakaway plugs sizes 25 and 17, and is also available with inserts 25-20 and 25-11 for MIL-STD-1760. Consult Amphenol Aerospace for ordering of the new hybrid breakaway connectors. These hybrid connectors will accommodate the standard backshells for breakaway connectors shown on page 90.

New Hybrid Lanyard Release Plugs
(Metal inside shells and Composite, lower profile outer sleeves)

Stores Management Type II, Rail Launch

Plugs and receptacles that meet MIL-STD-1760

Amphenol provides a Breakaway Rail Launch connector that is designed for use on aircraft that carry rail launch missiles such as AMRAAM.

These connectors are designed for blindmating of stores on rail launch applications. They consist of a buffer plug and a missile receptacle that meet the specifications of MIL-STD-1760 Stores Management.
Other features and benefits include:

- Designed to MIL-C-83538 specifications
- Bayonet and push pull coupling
- Use standard MIL-DTL-38999 crimp termination with power, coax and twinax contacts also available
- Buffer provides flame barrier
- Buffers are replaceable

Consult Amphenol Aerospace for more information and ordering.

Stores Management Type II Rail Launch Connectors

Amphenol Aerospace

HD38999 High Density

A connector that has the connections...

The HD38999 family of connectors was designed to work with existing mil-specified 38999 shells. To the end users familiar with standard 38999 connectors, this family of high density connectors will look, feel, and perform just like the mil-qualified connectors. Utilizing an existing mil-qualified 39029 size 23 contact and mil-qualified shells, the new system will be, in many cases, a drop-in connector. Even though the HD38999 has 30% more contacts, it still performs to minimum electrical requirements of standard 38999 connectors.

Goes from 9 to 187 contacts!

High Density Interconnects

- Aluminum
- Composite
- Stainless Steel

- Sealed
- Filtered

For more information e-mail:
hd38999info@amphenol-aao.com

Specifications, descriptions and illustrations in this literature are as accurate as known at the time of publication, but are subject to change without notice.

Shell Sizes (Front of Pin Insert Shown)

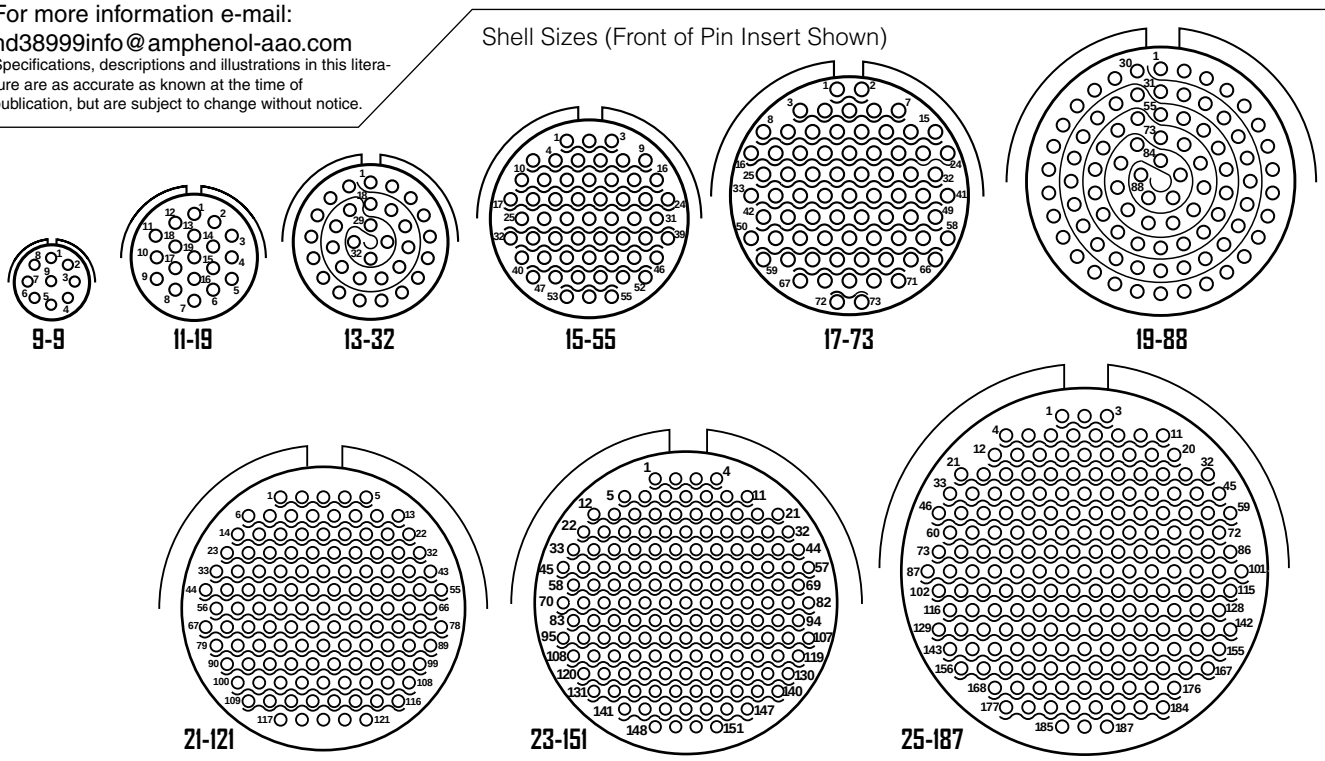

Front of
Pin Insert Shown.

CRIMP CONTACT SIZE	WIRE BARREL RANGES/CURRENT CAPABILITY		CRIMP BARREL DIAMETER	CRIMP BARREL
SAE AS39029, SIZE 23	22 AWG	5.0 AMPS	(Inches) .034-.036	Depth (Inches).151-.155
	24 AWG	3.0 AMPS		
	26 AWG	2.0 AMPS		
	28 AWG	1.5 AMPS		

Note: Wire insulation diameter greater than 0.045 inches is too large for the extraction tool to work properly. Connector damage is possible.

Contact Part Numbers
Size 23 Sockets 10-597330-735
Size 23 Pins 10-597331-735
Sealing Plugs 10-405996-222 (M27488-22-2)

Crimp Tool - Daniels M22520/2-01
Positioner - Daniels M22520/2-13 – Pins
Daniels M22520/2-16 – Sockets
Insertion/Removal Tool - Glenair 809-088

Temperature Range:
-65C to 175C

Insulation Resistance:
5000 megohms min.@ 500 VDC 25C

Dielectric Withstanding Voltage:
1000 VRMS @ Sea level

Easy Steps to build a part number... HD38999

1. Connector Type	2. Shell Styles	3. Service Class	4. Shell Size – Insert arrangement	5. Contact Type	6. Alternate Positions	7. PCB Options
(P)TV	06	RW	23-151	P	B	(P25)

Step 1. Select a Connector Type

	Designates
TV	Tri-Start Series Connector
TVP	Back panel mounted receptacle
(P)	Potted version

Step 2. Select a Shell Style

	Designates
00	Wall mount receptacle
01	Line receptacle
06	Straight plug
07	Jam nut receptacle

Step 3. Select a Service Class

	Designates
RF	Electroless nickel plated aluminum, optimum EMI shielding effectiveness -65dB @ 10GHz specification min., 48 hour salt spray, 175°C
RW	Corrosion resistant olive drab cadmium plate aluminum, 500 hour extended salt spray, EMI -50dB @ 10GHz specification min.,175°C
RK	Corrosion resistant stainless steel, plus 500 hour salt spray resistance, EMI –45 dB @ 10 GHz specification min., 175°C
DT	Durmalon plated, alternative to Cadmium. Corrosion resistant, 500 hour extended salt spray, EMI -50dB @ 10GHz specification min. without CR[6]
ZN	Zinc-Nickel Alternative to Cadmium corrosion resistant, 500 hour salt spray, Conductive, -65°C to +175°C

Step 4. Select a Shell Size – Insert Arrangement

Shell Sizes are MIL-DTL-38999, Series III, plus newer High Density insert arrangements

Shell Size	Insert Arrangement	Shell Size	Insert Arrangement
9 –	9	19 –	88
11 –	19	21 –	121
13 –	32	23 –	151
15 –	55	25 –	187
17 –	73		

Step 5. Select a Contact Type

	Designates
P	Pin contacts
S	Socket contacts

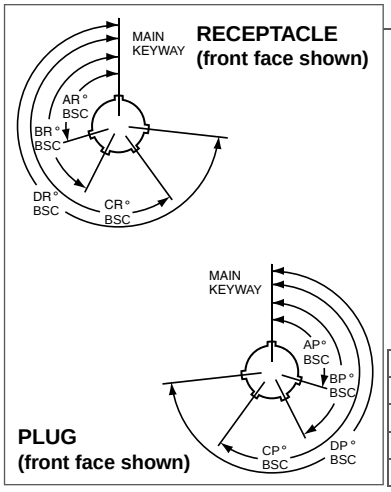

Step 6. Select an Alternate Position

A, B, C, D, E, blank for normal

Shell Size	Key & keyway arrangement identification letter	AR° or AP° BSC	BR° or BP° BSC	CR° or CP° BSC	DR° or DP° BSC
9	N*	105	140	215	265
	A	102	132	248	320
	B	80	118	230	312
	C	35	140	205	275
	D	64	155	234	304
	E	91	131	197	240
11, 13, and 15	N*	95	141	208	236
	A	113	156	182	292
	B	90	145	195	252
	C	53	156	220	255
	D	119	146	176	298
	E	51	141	184	242
17 and 19	N*	80	142	196	293
	A	135	170	200	310
	B	49	169	200	244
	C	66	140	200	257
	D	62	145	180	280
	E	79	153	197	272
21, 23, and 25	N*	80	142	196	293
	A	135	170	200	310
	B	49	169	200	244
	C	66	140	200	257
	D	62	145	180	280
	E	79	153	197	272

A plug with a given rotation letter will mate with a receptacle with the same rotation letter. The angles for a given connector are the same whether it contains pins or sockets. Inserts are not rotated in conjunction with the master key/keyway.

Step 7. Select a PCB Contacts

Pin	Socket	Designates
P1	S1	PCB tail stickout .100" nominal +/-.040 inch
P15	S15	PCB tail stickout .150" nominal +/-.040 inch
P2	S2	PCB tail stickout .200" nominal +/-.040 inch
P25	S25	PCB tail stickout .250" nominal +/-.040 inch

MIL-DTL-38999, Series I LJT
MIL-DTL-38999, Series II JT

Features & Benefits

Amphenol® LJT and JT Series subminiature cylindrical connectors are qualified to MIL-DTL-38999*, Series I and II respectively. These connectors were developed to meet the needs of the aerospace industry, and provided the impetus for development of the MIL-C-38999 specifications, which has been superseded by MIL-DTL-38999. Meeting or exceeding MIL-DTL-38999 requirements, Amphenol® JT/LJT connectors feature:

- **Lightweight, Space Saving Design**
- **Contact Protection -** 100% scoop-proof LJT design prevents bent pins and short circuits during mating
- **Quick Positive Coupling** - 3 point bayonet lock system
- **Mismating Eliminated** - with 5 key/keyway design
- **Error Proof Alternate Positioning** - insured by different key/keyway locations
- **EMI Shielding** - grounding fingers standard in LJT Series; optional in JT Series
- **Nine Shell Sizes and a Variety of Shell Styles**
- **Contact Options** - size 8, 10, 12, 16, 20, 22M and 22D Crimp, Solder, PCB, Wire wrap, Coax, Twinax, Triax, Thermocouple, Fiber Optic and Filter
- **Fixed Solder Contacts** - Amphenol MIL-DTL-38999 Series I LJT and II JT, are available in solder versions as both Commercial and Military qualified to MIL-DTL-27599
- **Hermetic** - air leakage limited to 1 X 10^{-7} cm^3 per second optional
- **"Breakaway" Lanyard Release Style** - available in LJT plugs. Provides quick disconnect of the connector plug and receptacle with axial pull on the lanyard. See pages 78-80.
- **Inventory Support Commonality** - uses standard MIL-DTL-38999 contacts, insert arrangements and application tools.
- **RoHS Compliant Product Available -** Consult Amphenol Aerospace Operations.

Where proof of high reliability and lot control is required, MS approved equivalents to most proprietary JT and LJT connectors are available.

* MIL-DTL-38999 Series I supersedes MIL-C-38999 Series I.
MIL-DTL-38999 Series II supersedes MIL-C-38999 Series II.

Components

Shell components are impact extruded or machined bar stock aluminum. Standard plating on shell components is cadmium over nickel. Many finishes are optional (see "Specifications" page 16). Hermetic seal receptacles are available in carbon steel or stainless steel shells. Dependable 5 key/keyway polarization with bayonet lock coupling is incorporated to aid and assure positive mating.

Insert material is a rigid dielectric with excellent electrical characteristics, providing durable protection for molded-in solder type contacts. Contrasting letter or number designations are used on insert faces.

A fluorinated silicone interfacial seal wafer is featured on the mating face of "crimp type pin" inserts. This assures complete electrical isolation of pins when connector halves are mated. In addition, a main joint gasket is installed in the receptacle for moisture sealing between connector halves. Both features are also available for hermetic receptacles.

Contacts

Maximum design flexibility is built into the JT/LJT Series, with a minimum of 2 to a maximum of 128 circuits per connector in a wide variety of contact arrangements. Contacts are available in sizes 8, 10, 12, 16, 20, 22, 22D and 22M with standard 50 micro inch minimum gold plating (100 micro inches optional). All socket contacts are probe proof. Crimp type rear removable contacts are featured in JT-R and LJT-R connectors. Solder termination contacts are also available, as well as PCB, wire wrap, thermocouple, fiber optic, coaxial, triaxial and twinax contact options.

Optional Features

High temperature capability of 392°F is available only in JTS or LJTS crimp type connectors. High temperature versions feature gold plated contacts, high temperature shell plating, stainless steel coupling nut spring, and epoxy inserts/fluorinated silicone grommet combination. Standard temperature capability for both solder and crimp is 302°F.

The JTN or LJTN type connectors are available for N_2O_4 resistance provided they are mated, and un-grommeted rear faces are suitably protected.
For complete listing and definition of connector types, shell styles and service classes, see How to Order, page 46. For information on Fail-Safe Lanyard Release style plugs, see pages 78–80.

How to Order (Commercial)

Easy Steps to build a commercial part number... Series I and II Commercial

1. Connector Type Series I	II	2. Shell Style	3. Service Class	4. Shell Size-Insert Arrangement	5. Contact Type	6. Alternate Position	7. Strain Relief/Finish Variation Suffix	
LJT	JT	00	RT	9-35	P	B	SR	(014)

Step 1. Select a Connector Type

1. Connector Type	2. Shell Style	3. Service Class	4. Shell Size-Insert Arrg.	5. Contact Type	6. Alternate Position	7. Special Variations
JT						

Series I	Series II	Designates
	JT	Standard Junior Tri-Lock
LJT		Long Junior Tri-Lock
LJTS	JTS	High temperature connector
LJTN	JTN	Chemical and fuel resistant
	JTL	Miniature mounting dimensions
	JTLN	Miniature mounting dimensions–Chemical resistant
	JTLS	Miniature mounting dimensions– High temperature
LJTPQ	JTPQ	Back panel mounted wall mounting receptacle
LJTP	JTP	Back panel mounted box mounting receptacle
LJTPN	JTPN	Back panel mounted–Chemical resistant
LJTPS	JTPS	Back panel mounted–High temperature
	JTG	Plug with grounding fingers*
	JTNG	Plug with grounding fingers* –Chemical resistant

*Grounding fingers standard on all LJT plugs

Step 2. Select a Shell Style... Series I & II

1. Connector Type	2. Shell Style	3. Service Class	4. Shell Size-Insert Arrg.	5. Contact Type	6. Alternate Position	7. Special Variations
	00					

Lanyard Release Connector (See pages 78-80 for ordering)

	Designates
00	Wall mount receptacle
01	Line mount receptacle
02	Box mount receptacle
06	Straight plug
07	Jam nut receptacle
08	90 degree plug
I	Solder mount receptacle- hermetic
88	Fail safe lanyard release plug with corrosion resistant olive drab cadmium plate over nickel shells
91	Fail safe lanyard release plug with electroless nickel plated aluminum shells.

Series I LJT

Wall Mounting Receptacle

Line Receptacle

Jam Nut Receptacle

Straight Plug

Solder Mounting Receptacle

Lanyard Release Plug

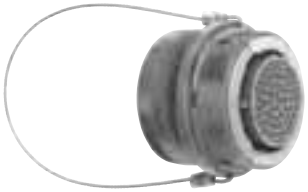

Series II JT

Wall Mounting Receptacle

Box Mounting Receptacle

Straight Plug

Jam Nut Receptacle

90° Plug

Solder Mounting Receptacle

How to Order (Commercial)

Step 3. Select a Service Class

1. Connector Type	2. Shell Style	3. Service Class	4. Shell Size-Insert Arrg.	5. Contact Type	6. Alternate Position	7. Special Variations
		RX				

Commercial	Solder Contacts/Connectors
P	Potting applications: These connectors are supplied with a potting boot. All shells are designed with integral features to retain potting boots.
A	General Applications
A (SR)	Threaded rear design with strain relief†
C	Pressurized applications
C (SR)	Threaded rear design with strain relief.†
E	Box mount and thru-bulkhead only with no backend threads.
H	Hermetic applications- Fused compression glass sealed inserts. Leadage rate less than .01 micron cu. ft./hr. (1 x 10-7 cc/sec.) at 15 psi differential.
Y	Same as "H" with interfacial seal.
T	MS27599A applications-general duty, pressurized (receptacle only)
Commercial	**Crimp Contacts/Connectors**
RP	Potting crimp applications. Supplied with spacer grommet and potting boot.††
RE	Environmental crimp applications. Supplied with a grommet and compression nut.† Can be supplied with strain relief integral with compression nut "RE(SR)". (JT Series only)
RGF	Electroless nickel plated ground plane aluminum, 200°C
RGW	Olive drab cadmium plated ground plane aluminum, 175°C
RT	Environmental applications. Supplied without rear accessories. Design provides serrations on rear threads of shells.

† Not applicable to box mounting style or LJT Series I.
†† Not applicable to box mounting style.

Step 4. Select a Shell Size & Insert Arrangement see page 4-7

Shell Size & Insert Arrangements are on pages 4-7.
First number represents Shell Size,
second number is the Insert Arrangement.

1. Connector Type	2. Shell Style	3. Service Class	4. Shell Size-Insert Arrg.	5. Contact Type	6. Alternate Position	7. Special Variations
			22-2			

Step 5. Select a Contact Type

1. Connector Type	2. Shell Style	3. Service Class	4. Shell Size-Insert Arrg.	5. Contact Type	6. Alternate Position	7. Special Variations
				P		

	Designates
P	Pin Contacts
S	Socket Contacts

How to Order (Commercial)

1. Connector Type	2. Shell Style	3. Service Class	4. Shell Size Insert Arrg.	5. Contact Type	6. Alternate Position	7. Special Variations
					A	

Step 6. Select an Alternate Keying Position

"A" designates Alternate keying connector assembly. Other basic alternate keys are "B", "C" and "D". No letter required for normal rotation (no rotation) position.

A plug with a given rotation letter will mate with a receptacle with the same rotation letter. The AB angle for a given connector is the same whether it contains pins or sockets. Only the master key/keyway rotates in the shell, and the minor keys are fixed.

AB angles shown are viewed from the front face of the connector, a receptacle is shown below. The angles for the plug are exactly the same except the direction of rotation is opposite of that shown for the receptacle.

The "N" designation is not referenced in part number, it is omitted.

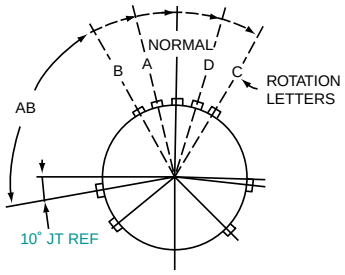

RELATIVE POSSIBLE POSITION OF ROTATED MASTER KEYWAY (front face of receptacle shown)

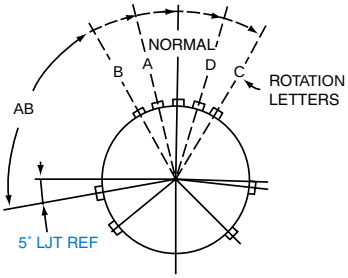

RELATIVE POSSIBLE POSITION OF ROTATED MASTER KEYWAY (front face of receptacle shown)

JT Key/Keyway Rotation

AB ANGLE OF ROTATION (Degrees)					
Shell Size	Normal	A	B	C	D
8	100°	82°	-	-	118°
10	100°	86°	72°	128°	114°
12	100°	80°	68°	132°	120°
14	100°	79°	66°	134°	121°
16	100°	82°	70°	130°	118°
18	100°	82°	70°	130°	118°
20	100°	82°	70°	130°	118°
22	100°	85°	74°	126°	115°
24	100°	85°	74°	126°	115°

LJT Key/Keyway Rotation

AB ANGLE OF ROTATION (Degrees)					
Shell Size	Normal	A	B	C	D
9	95°	77°	-	-	113°
11	95°	81°	67°	123°	109°
13	95°	75°	63°	127°	115°
15	95°	74°	61°	129°	116°
17	95°	77°	65°	125°	113°
19	95°	77°	65°	125°	113°
21	95°	77°	65°	125°	113°
23	95°	80°	69°	121°	110°
25	95°	80°	69°	121°	110°

1. Connector Type	2. Shell Style	3. Service Class	4. Shell Size- Insert Arrg.	5. Contact Type	6. Alternate Position	7. Special Variations
						( )

Step 7. Select a Strain Relief Option or Finish Variation Suffix

Strain Relief Options: "SR" designates a strain relief clamp. Strain reliefs are available only on Service Class "A", "C" and "RE" (see step 3. Service Class)

Finish Variation Suffix: See finish variations available in table to your right.

Finish	Military Finish Data	Finish Suffix	Finish Plus "SR" Suffix
Cadmium plated nickel base 175° C	A		**(SR)**
Olive drab cadmium plate nickel base 175° C	B	**(014)**	**(386)**
Electroless nickel 200° C	F	**(023)**	**(424)**
Electroless nickel, space compatible 200° C		**(453)**	**(467)**
Anodic coating (Alumilite) 200° C	C	**(005)**	**(300)**
Chromate treated (Iridite 14-2) 125° C		**(011)**	**(344)**
Passivated steel 200° C	E	-	-
Nickel-PTFE 175° C		**(038)**	

How to Order (Commercial)

Easy Steps to build a Military part number... Series I and II

Military

1. MS Number	2. Service Class	3. Shell Size	4. Finish	5. Insert Arrangement	6. Contact Style (P or S)	7. Alternate Keying Position
MS27473	E	14	A	18	P	A

Step 1. Choose your Military Connector Type

1. MS Number	2. Service Class	3. Shell Size	4. Finish	5. Insert Arrangement	6. Contact Style (P or S)	7. Alternate Position
MS27473						

Series II JT

	Designates
MS27472	Crimp Wall Mount Receptacle
MS27497	Crimp Wall Mount Receptacle Back Panel Mounting
MS27499	Crimp Box Mounting Receptacle
MS27513	Crimp Box Mounting Receptacle with grommet and compression nut
MS27508	Crimp Box Mounting Receptacle (Back Panel Mounting)
MS27473	Crimp Straight Plug
MS27484	Crimp Straight Plug with Grounding Fingers
MS27474	Crimp Jam Nut Receptacle
MS27500	Crimp 90° plug
MS27475	Hermetic Wall Mounting Receptacle
MS27476	Hermetic Box Mounting Receptacle
MS27477	Hermetic Jam Nut Receptacle
MS27478	Hermetic Solder Mounting Receptacle
MS27334	Solder Wall Mount Receptacle
MS27335	Solder Box Mounting Receptacle
MS27336	Solder Straight Plug
MS27337	Solder Jam Mounting Receptacle

Series I LJT

	Designates
MS27466	Crimp Wall Mount Receptacle
MS27656	Crimp Wall Mount Receptacle Back Panel Mounting
MS27496	Crimp Box Mounting Receptacle
MS27505	Crimp Box Mounting Receptacle (Back Panel Mounting)
MS27467	Crimp Straight Plug
MS27468	Crimp Jam Nut Receptacle
MS27469	Hermetic Wall Mounting Receptacle
MS27470	Hermetic Jam Nut Receptacle
MS27471	Hermetic Solder Mounting Receptacle
MS20026	Solder Wall Mounting Receptacle
MS20027	Solder Line Receptacle
MS20028	Solder Straight Plug
MS20029	Solder Jam Nut Receptacle

Step 2. Select a Military Service Class

1. MS Number	2. Service Class	3. Shell Size	4. Finish	5. Insert Arrangement	6. Contact Style (P or S)	7. Alternate Position
	E					

Military	Service Class
E	Environmental crimp applications. Supplied with a grommet and compression nut.† Can be supplied with strain relief integral with compression nut "RE(SR)". (JT Series only). Box Mount versions using spacer grommets are not environmental.
P	Potting crimp applications. Supplied with spacer grommet and potting boot.††
T	Environmental applications. Supplied without rear accessories. Design provides serrations on rear threads of shells. (MS27599 applications)- General duty-pressurized (receptacles only)
Y	Hermetically interfacial seal

† Not applicable to box mounting style or LJT Series I.
†† Not applicable to box mounting style.

How to Order (Military)

Step 3 & 5. Select a Shell Size and Insert Arrangement from Pages 4-7

1. MS Number	2. Service Class	3. Shell Size	4. Finish	5. Insert Arrangement	6. Contact Style (P or S)	7. Alternate Position
		14		18		

Shell Size & Insert Arrangement are on pages 4-7. First number represents Shell Size, second number is the Insert Arrangement. Place Shell Size in box 3 and Insert Arrangement in box 5.

Step 4. Select a Military Finish

1. MS Number	2. Service Class	3. Shell Size	4. Finish	5. Insert Arrangement	6. Contact Style (P or S)	7. Alternate Position
			A			

Finish	Military Finish Data	Finish Suffix	Finish Plus "SR" Suffix
Cadmium plated nickel base 175° C	**A**		(SR)
Olive drab cadmium plate nickel base 175° C	**B**	(014)	(386)
Electroless nickel 200° C	**F**	(023)	(424)
Electroless nickel, space compatible 200° C		(453)	(467)
Anodic coating (Alumilite) 200° C	**C**	(005)	(300)
Chromate treated (Iridite 14-2) 125° C		(011)	(344)
Passivated steel 200° C	**E**	-	-
Nickel-PTFE 175° C		(038)	

Step 6. Select a Military Contact Type

	Designates
P	Pin Contacts
S	Socket Contacts

1. MS Number	2. Service Class	3. Shell Size	4. Finish	5. Insert Arrangement	6. Contact Style (P or S)	7. Alternate Position
					P	

Step 7. Select an Alternate Keying Position

See pg 48 for information, No letter required for normal position

1. MS Number	2. Service Class	3. Shell Size	4. Finish	5. Insert Arrangement	6. Contact Style (P or S)	7. Alternate Position
						A

Amphenol
MIL-DTL-38999, Series II, JT

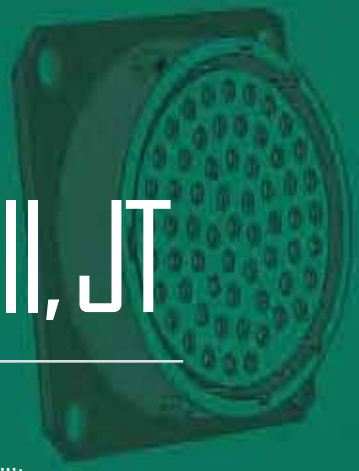

TABLE OF CONTENTS

Combined MIL-DTL-38999 Series I, II, III

- Shell Size & Insert Arrangements Availability 4-7
- Insert Arrangement Drawings 8-14
- Specifications - Contact Ratings, Service Ratings, Finish Data 15, 16

MIL-DTL-38999, Series II JT and Series I LJT

- Features and Benefits 45
- How to Order (Commercial). 46-48
- How to Order (Military). 49, 50

JT Shell Styles:

- Table of Contents 51
- Crimp Wall Mounting Receptacle JT00R (MS27472) 52
- Crimp Wall Mounting Receptacle for Back Panel Mounting JTPQ00R (MS27497) 53
- Crimp Line Receptacle JT01R. 54
- Crimp Box Mounting Receptacles JT02RE (MS27499), JT02RE(053) (MS27513) 55
- Crimp Box Mounting Receptacle for Back Panel Mounting JTP02R (MS27508) 56
- Crimp Straight Plug JT06R (MS27473) 57
- Crimp Straight Plug with Grounding Fingers JTG06R (MS27484) 58
- Crimp Jam Nut Receptacle JT07R (MS27474) 59
- Crimp Jam Nut Receptacle (Miniature Jam Nut Mounting Dimensions) JTL07R 60
- Crimp 90° Plug JT08R (MS27500) 61
- Hermetic Wall Mounting Receptacle JT00 (MS27475), Hermetic Box Mounting Receptacle JT02 (MS27476) 62
- Hermetic Jam Nut Receptacle JT07 (MS27477), Hermetic Solder Mounting Receptacle JTI (MS27478) 63
- Solder Wall Mounting Receptacle JT00 (MS27334), Solder Box Mounting Receptacle JT02 (MS27335) 64
- Solder Straight Plug JT06 (MS27336), Solder Straight Plug with Grounding Ring JTG06A 65
- Solder Jam Nut Receptacle JT07 (MS27337), Solder 90° Plug JT08 66
- Accessories, Contacts, and Tools see pages 89-108

MIL-DTL-38999 Series II Typical Markets:

- Military & Commercial Aviation
- Military Vehicles
- Missiles & Ordnance
- C4ISR

Amphenol Aerospace

PART

Part number reference. To complete, see how to order pages 46-50.

Commercial

Connector Type	Shell Style	Service Class	Shell Size & Insert Arrg	Contact Type	Alternate Position	Special Variations
JT/JTS/JTN	00	RT	22-2	P	A	(XXX)

Military

MS Number	Service Class	Shell Size	Finish	Insert Arrg	Contact Style (P or S)	Alternate Position
MS27472	E	14	A	18	P	A
MS27479	E	14	A	18	P	A

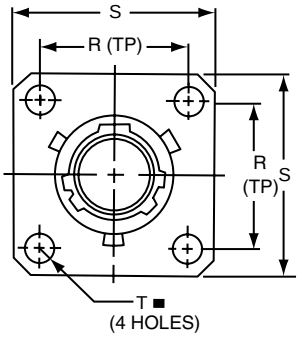

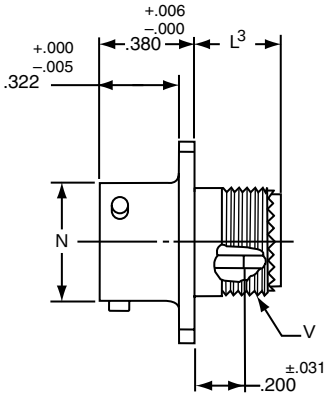

* JT00RT-XX-XXX(MS27472T)
** JTS00RT-XX-XXX(MS27479T)
*** JTN00RT-XX-XXX

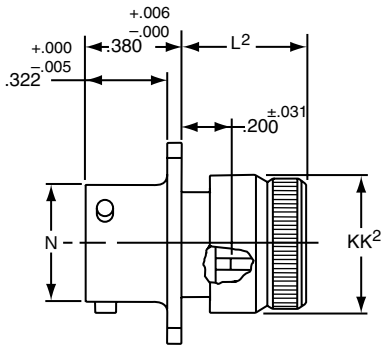

* JT00RE-XX-XXX (MS27472E)
** JTS00RE-XX-XXX(MS27479E)
*** JTN00RE-XX-XXX

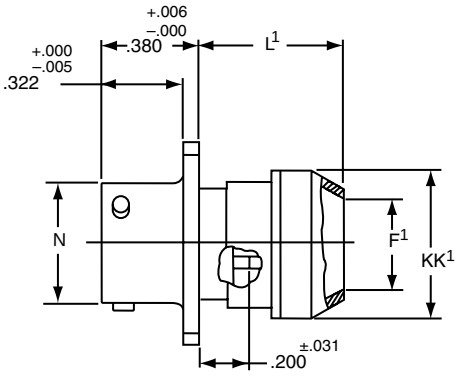

* JT00RP-XX-XXX(MS27472P)
** JTS00RP-XX-XXX
*** JTN00RP-XX-XXX

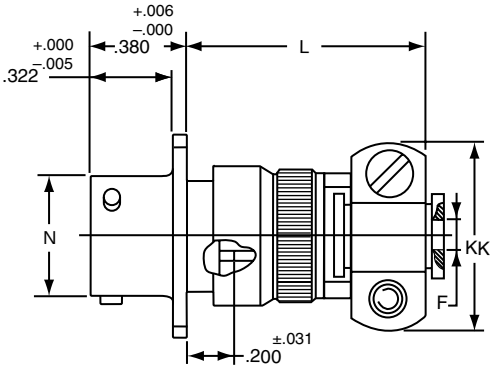

* JT00RE-XX-XXX (SR)
** JTS00RE-XX-XXX (SR)
*** JTN00RE-XX-XXX (SR)

■ ⊕ .005 DIA Ⓜ

* Standard Junior Tri-Lock
** High temperature version
*** Clear iridite finish (gold color), N_2O_4 resistant

Shell Size	F Dia. +.010 −.025	F¹ Dia. ±.010	L Max.	L¹ Max.	L² Max.	L³ Max.	N +.001 −.005	R (TP)	S ±.016	T ±.005	V Thread UNEF Class 2A (Plated)	KK Max.	KK¹ Dia. Max.	KK² Dia. Max.
8	.125	.444	1.094	.609	.547	.500	.473	.594	.812	.120	.4375-28	.812	.625	.578
10	.188	.558	1.094	.609	.547	.500	.590	.719	.938	.120	.5625-24	.875	.750	.703
12	.312	.683	1.094	.609	.547	.500	.750	.812	1.031	.120	.6875-24	1.000	.875	.828
14	.375	.808	1.344	.609	.547	.500	.875	.906	1.125	.120	.8125-20	1.125	1.000	.953
16	.500	.909	1.344	.609	.547	.500	1.000	.969	1.219	.120	.9375-20	1.188	1.125	1.078
18	.625	1.034	1.344	.609	.547	.500	1.125	1.062	1.312	.120	1.0625-18	1.438	1.250	1.203
20	.625	1.159	1.344	.609	.547	.500	1.250	1.156	1.438	.120	1.1875-18	1.438	1.375	1.328
22	.750	1.284	1.469	.609	.547	.500	1.375	1.250	1.562	.120	1.3125-18	1.625	1.500	1.453
24	.800	1.409	1.469	.688	.547	.500	1.500	1.375	1.688	.147	1.4375-18	1.719	1.625	1.578

All dimensions for reference only.

JTPQ00R (MS27497) Series II – Crimp
Wall Mounting Receptacle
(Back Panel Mounting)

Amphenol Aerospace

PART #
Commercial

Part number reference. To complete, see how to order pages 46-50.

Connector Type	Shell Style	Service Class	Shell Size & Insert Arrg	Contact Type	Alternate Position	Special Variations
JTPQ/JTPSQ	00	RT	22-2	P	A	(XXX)

Military

MS Number	Service Class	Shell Size	Finish	Insert Arrg	Contact Style (P or S)	Alternate Position
MS27497	E	14	A	18	P	A

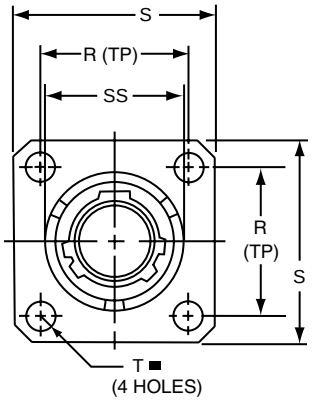

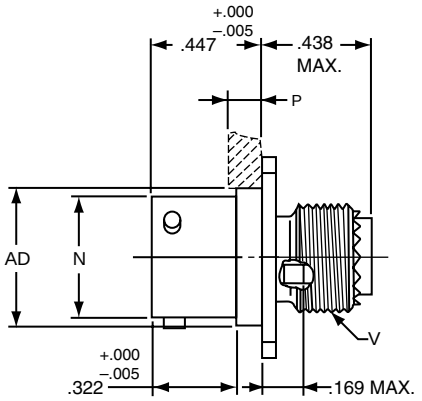

* JTPQ00RT-XX-XXX(MS27497T)
** JTPSQ00RT-XX-XXX

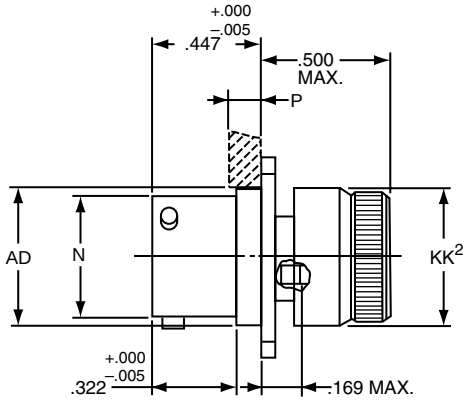

* JTPQ00RE-XX-XXX (MS27497E)

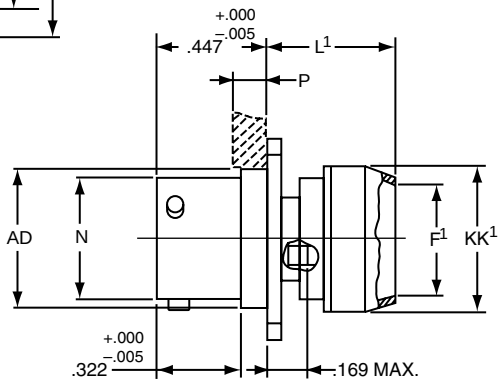

* JTPQ00RP-XX-XXX(MS27497P)

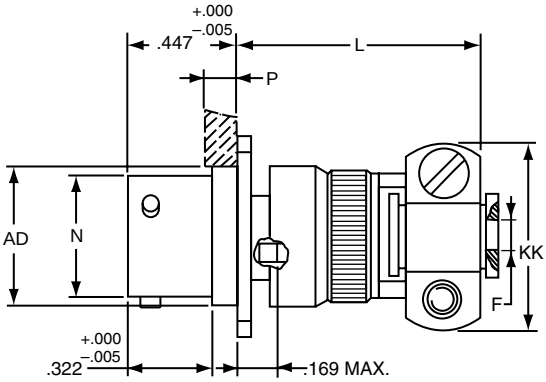

*JTPQ00RE-XX-XXX (SR)

■ ⊕ .005 DIA Ⓜ

* Standard Junior Tri-Lock
** High temperature version

Shell Size	F Dia. +.010 –.025	F[1] Dia. ±.010	L Max.	L[1] Max.	N +.001 –.005	P Max. Panel Thick-ness	R (TP)	S ±.016	T ±.005	V Thread UNEF Class 2A (Plated)	AD Dia. ±.005	KK Max.	KK[1] Dia. Max.	KK[2] Dia. Max.	SS Dia. +.000 –.016
8	.125	.444	1.140	.468	.473	.142	.594	.812	.120	.4375-28	.516	.781	.625	.578	.563
10	.188	.558	1.140	.468	.590	.142	.719	.938	.120	.5625-24	.633	.844	.750	.703	.680
12	.312	.683	1.140	.468	.750	.142	.812	1.031	.120	.6875-24	.802	.969	.875	.828	.859
14	.375	.808	1.375	.468	.875	.142	.906	1.125	.120	.8125-20	.927	1.094	1.000	.953	.984
16	.500	.909	1.375	.468	1.000	.142	.969	1.219	.120	.9375-20	1.052	1.154	1.125	1.078	1.108
18	.625	1.034	1.375	.468	1.125	.142	1.062	1.312	.120	1.0625-18	1.177	1.406	1.250	1.203	1.233
20	.625	1.159	1.375	.468	1.250	.142	1.156	1.438	.120	1.1875-18	1.302	1.406	1.375	1.328	1.358
22	.750	1.284	1.516	.468	1.375	.142	1.250	1.562	.120	1.3125-18	1.427	1.594	1.500	1.453	1.483
24	.800	1.409	1.500	.540	1.500	.142	1.375	1.688	.147	1.4375-18	1.552	1.688	1.625	1.578	1.610

All dimensions for reference only.

PART #
Commercial

Part number reference. To complete, see how to order pages 46-50.

Connector Type	Shell Style	Service Class	Shell Size & Insert Arrg	Contact Type	Alternate Position	Special Variations
JT/JTS/JTN	01	RT	22-2	P	A	(XXX)

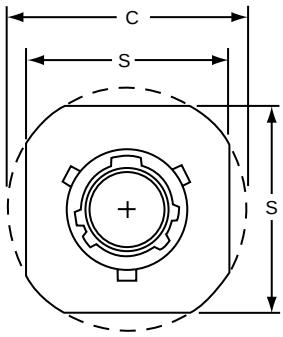

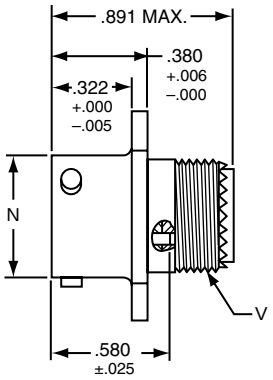

* JT01RT-XX-XXX
** JTS01RT-XX-XXX
*** JTN01RT-XX-XXX

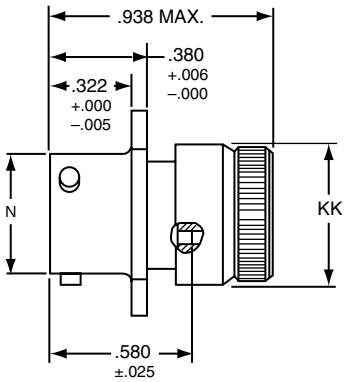

* JT01RE-XX-XXX
** JTS01RE-XX-XXX
*** JTN01RE-XX-XXX

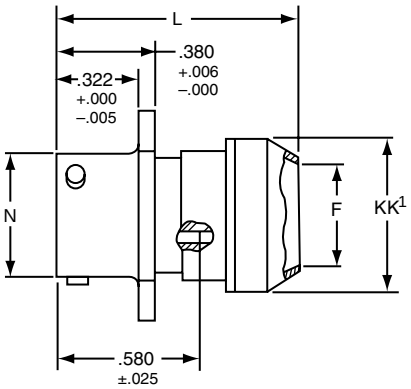

* JT01RP-XX-XXX
** JTS01RP-XX-XXX
*** JTN01RP-XX-XXX

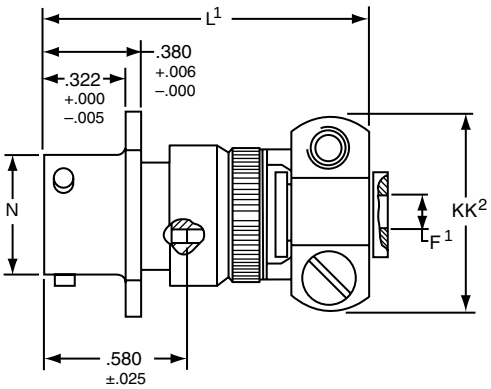

* JT01RE-XX-XXX (SR)
** JTS01RE-XX-XXX (SR)
*** JTN01RE-XX-XXX (SR)

* Standard Junior Tri-Lock
** High temperature version
*** Clear iridite finish (gold color), N_2O_4 resistant

Shell Size	C Max.	F Dia. +.010	F[1] Dia. +.010 –.025	L Max.	L[1] Max.	N Dia. +.001 –.005	S +.017 –.016	V Thread UNEF Class 2A (Plated)	KK Dia. Max.	KK[1] Dia. Max.	KK[2] Max.
8	.965	.444	.125	1.031	1.562	.473	.812	.4375-28	.578	.625	.812
10	1.089	.558	.188	1.031	1.562	.590	.938	.5625-24	.703	.750	.875
12	1.183	.683	.312	1.031	1.562	.750	1.031	.6875-24	.828	.875	1.000
14	1.277	.808	.375	1.031	1.812	.875	1.125	.8125-20	.953	1.000	1.125
16	1.371	.909	.500	1.031	1.812	1.000	1.219	.9375-20	1.078	1.125	1.188
18	1.465	1.034	.625	1.031	1.812	1.125	1.312	1.0625-18	1.203	1.250	1.438
20	1.589	1.159	.625	1.031	1.812	1.250	1.438	1.1875-18	1.328	1.375	1.438
22	1.715	1.284	.750	1.031	1.938	1.375	1.562	1.3125-18	1.453	1.500	1.625
24	1.838	1.409	.800	1.109	1.938	1.500	1.688	1.4375-18	1.578	1.625	1.719

All dimensions for reference only.

Amphenol Aerospace

Box Mounting Receptacle

PART #

Part number reference. To complete, see how to order pages 46-50.

Commercial

Connector Type	Shell Style	Service Class	Shell Size & Insert Arrg	Contact Type	Alternate Position	Special Variations
JT/JTS/JTN	**02**	**RE**	22-2	P	A	(XXX)

Military

MS Number	Service Class	Shell Size	Finish	Insert Arrg	Contact Style (P or S)	Alternate Position
MS27499	E	14	A	18	P	A
MS27513	E	14	A	18	P	A

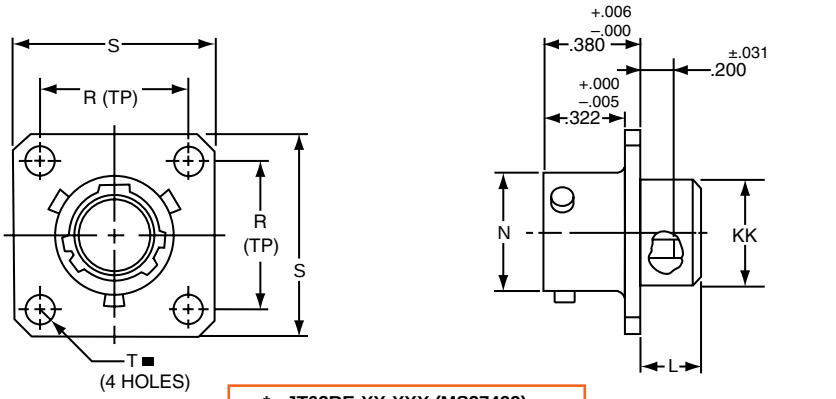

* JT02RE-XX-XXX (MS27499)
** JTS02RE-XX-XXX
*** JTN02RE-XX-XXX

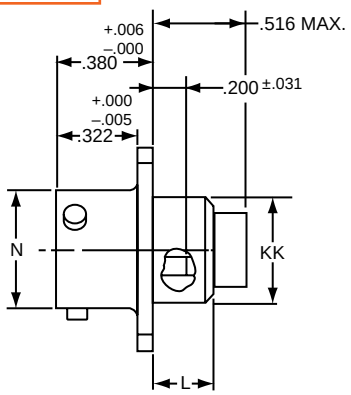

* JT02RE-XX-XXX (053) (MS27513)
** JTS02RE-XX-XXX (053)
*** JTN02RE-XX-XXX (053)

■ ⊕ .005 DIA Ⓜ

* Standard Junior Tri-Lock
** High temperature version
*** Clear iridite finish (gold color), N_2O_4 resistant

Shell Size	L Max.	N +.001 –.005	R (TP)	S ±.016	T ±.005	KK Dia. Max.
8	.286	.473	.594	.812	.120	.438
10	.286	.590	.719	.938	.120	.563
12	.286	.750	.812	1.031	.120	.688
14	.286	.875	.906	1.125	.120	.813
16	.286	1.000	.969	1.219	.120	.938
18	.286	1.125	1.062	1.312	.120	1.047
20	.286	1.250	1.156	1.438	.120	1.172
22	.286	1.375	1.250	1.562	.120	1.297
24	.286	1.500	1.375	1.688	.147	1.422

All dimensions for reference only.
NOTE: For applications requiring an environmental seal, please refer to JT00R, page 47.

JTP02R (MS27508) Series II – Crimp Box Mounting Receptacle

Back Panel Mounting

PART #
Commercial

Part number reference. To complete, see how to order pages 46-50.

Connector Type	Shell Style	Service Class	Shell Size & Insert Arrg	Contact Type	Alternate Position	Special Variations
JT/JTPS/JTPN	**02**	*RE*	*22-2*	*P*	*A*	*(XXX)*

Military

MS Number	Service Class	Shell Size	Finish	Insert Arrg	Contact Style (P or S)	Alternate Position
MS27508	**E**	*14*	*A*	*18*	*P*	*A*

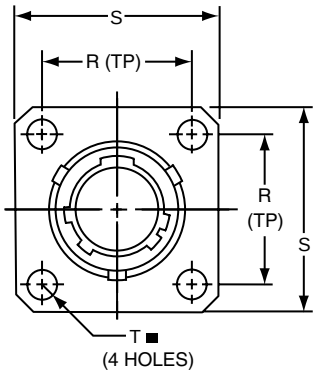

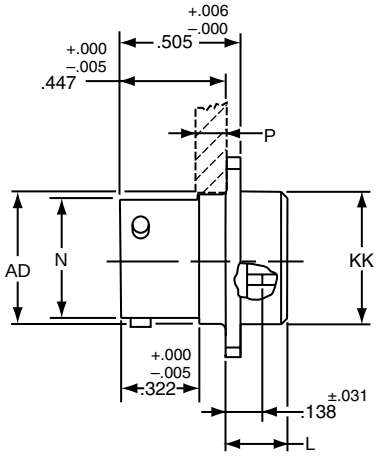

*** JTP02RE-XX-XXX (MS27508E)**
**** JTPS02RE-XX-XXX**
*****JTPN02RE-XX-XXX**

■ Ⓢ .005 DIA Ⓜ

* Standard Junior Tri-Lock
** High temperature version
*** Clear iridite finish (gold color), N_2O_4 resistant

Shell Size	L Max.	N +.001 –.005	P Max. Panel Thickness	R (TP)	S ±.016	T Dia. ±.005	AD Dia. ±.005	KK Dia. Max.
8	.225	.473	.147	.594	.812	.120	.516	.531
10	.225	.590	.152	.719	.938	.120	.633	.656
12	.225	.750	.152	.812	1.031	.120	.802	.828
14	.225	.875	.152	.906	1.125	.120	.927	.953
16	.225	1.000	.152	.969	1.219	.120	1.052	1.078
18	.225	1.125	.152	1.062	1.312	.120	1.177	1.203
20	.225	1.250	.179	1.156	1.438	.120	1.302	1.328
22	.225	1.375	.179	1.250	1.562	.120	1.427	1.453
24	.225	1.500	.169	1.375	1.688	.147	1.552	1.578

All dimensions for reference only.

PART #
Commercial

Part number reference. To complete, see how to order pages 46-50.

Connector Type	Shell Style	Service Class	Shell Size & Insert Arrg	Contact Type	Alternate Position	Special Variations
JT/JTS/JTN	**06**	*RE*	*22-2*	*P*	*A*	*(XXX)*

Military

MS Number	Service Class	Shell Size	Finish	Insert Arrg	Contact Style (P or S)	Alternate Position
MS27473	*E*	*14*	*A*	*18*	*P*	*A*

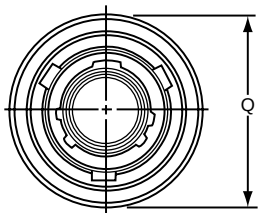

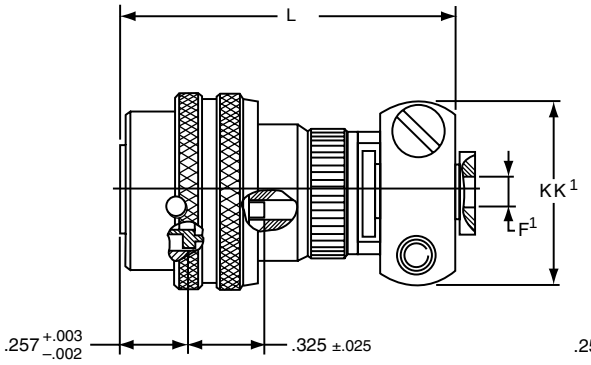

* JT06RE-XX-XXX (SR)
** JTS06RE-XX-XXX (SR)
***JTN06RE-XX-XXX (SR)

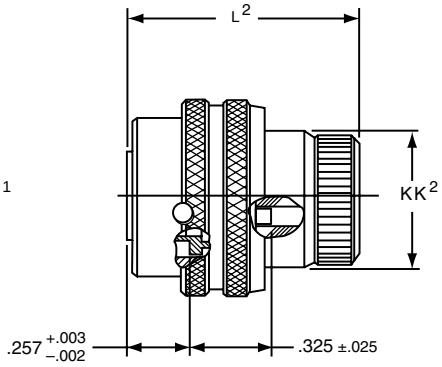

* JT06RE-XX-XXX (MS27473E)
** JTS06RE-XX-XXX
***JTN06RE-XX-XXX

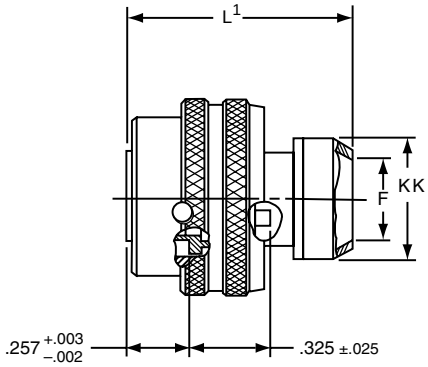

* JT06RP-XX-XXX (MS27473P)
** JTS06RP-XX-XXX
***JTN06RP-XX-XXX

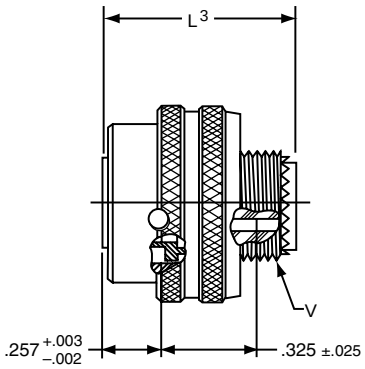

* JT06RT-XX-XXX (MS27473T)
** JTS06RT-XX-XXX
***JTN06RT-XX-XXX

* Standard Junior Tri-Lock
** High temperature version
*** Clear iridite finish (gold color), N_2O_4 resistant

Shell Size	F Dia.	F¹ Dia. +.001 –.025	L Max.	L¹ Max.	L² Max.	L³ Max.	Q Dia Max.	V Thread Modified		KK Dia. Max.	KK¹ Max.	KK² Dia. Max.
								Class 2A UNEF	Modified Major Dia.			
8	.444	.125	1.562	1.000	.938	.891	.734	.4375-28	.421 – .417	.625	.812	.578
10	.558	.188	1.562	1.000	.938	.891	.844	.5625-24	.542 – .538	.750	.875	.703
12	.683	.312	1.562	1.000	.938	.891	1.016	.6875-24	.667 – .663	.875	1.000	.828
14	.808	.375	1.812	1.000	.938	.891	1.141	.8125-20	.791 – .787	1.000	1.125	.953
16	.909	.500	1.812	1.000	.938	.891	1.265	.9375-20	.916 – .912	1.125	1.188	1.078
18	1.034	.625	1.812	1.000	.938	.891	1.391	1.0625-18	1.034 – 1.030	1.250	1.438	1.203
20	1.159	.625	1.812	1.000	.938	.891	1.500	1.1875-18	1.158 – 1.154	1.375	1.438	1.328
22	1.284	.750	1.938	1.000	.938	.891	1.625	1.3125-18	1.283 – 1.279	1.500	1.625	1.453
24	1.409	.800	1.938	1.062	.938	.891	1.750	1.4375-18	1.408 – 1.404	1.625	1.719	1.578

All dimensions for reference only.

PART

Part number reference. To complete, see how to order pages 46-50.

Commercial

Connector Type	Shell Style	Service Class	Shell Size & Insert Arrg	Contact Type	Alternate Position	Special Variations
JTG/JTNG	**06**	*RE*	*22-2*	*P*	*A*	*(XXX)*

Military

MS Number	Service Class	Shell Size	Finish	Insert Arrg	Contact Style (P or S)	Alternate Position
MS27484	*E*	*14*	*A*	*18*	*P*	*A*

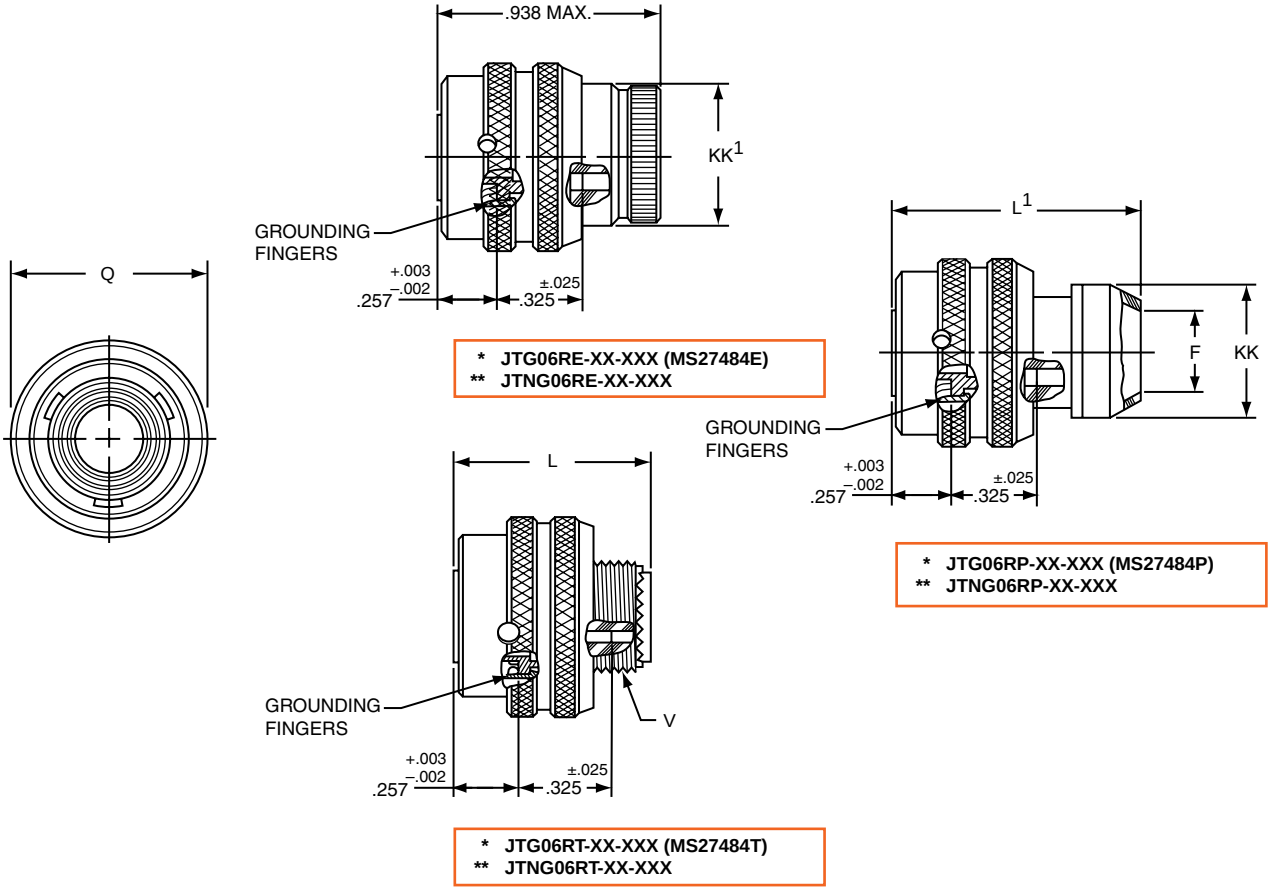

* JTG06RE-XX-XXX (MS27484E)
** JTNG06RE-XX-XXX

* JTG06RP-XX-XXX (MS27484P)
** JTNG06RP-XX-XXX

* JTG06RT-XX-XXX (MS27484T)
** JTNG06RT-XX-XXX

* Plug with grounding fingers
** Clear iridite finish (gold color), N_2O_4 resistant

Shell Size	F Dia.	L Max.	L^1 Max.	Q Dia Max.	V Thread Modified		KK Dia. Max.	KK^1 Dia. Max.
					Class 2A UNEF	Modified Major Dia.		
8	.444	.891	1.000	.734	.4375-28	.421 – .417	.625	.578
10	.558	.891	1.000	.844	.5625-24	.542 – .538	.750	.703
12	.683	.891	1.000	1.016	.6875-24	.667 – .663	.875	.828
14	.808	.891	1.000	1.141	.8125-20	.791 – .787	1.000	.953
16	.909	.891	1.000	1.265	.9375-20	.916 – .912	1.125	1.078
18	1.034	.891	1.000	1.391	1.0625-18	1.034 – 1.030	1.250	1.203
20	1.159	.891	1.000	1.500	1.1875-18	1.158 – 1.154	1.375	1.328
22	1.284	.891	1.000	1.625	1.3125-18	1.283 – 1.279	1.500	1.453
24	1.409	.891	1.062	1.750	1.4375-18	1.408 – 1.404	1.625	1.578

All dimensions for reference only.

PART #
Commercial

Part number reference. To complete, see how to order pages 46-50.

Connector Type	Shell Style	Service Class	Shell Size & Insert Arrg	Contact Type	Alternate Position	Special Variations
JT/JTS/JTN	07	RE	22-2	P	A	(XXX)

Military

MS Number	Service Class	Shell Size	Finish	Insert Arrg	Contact Style (P or S)	Alternate Position
MS27474	E	14	A	18	P	A

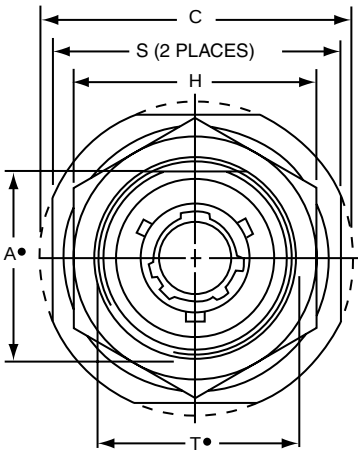

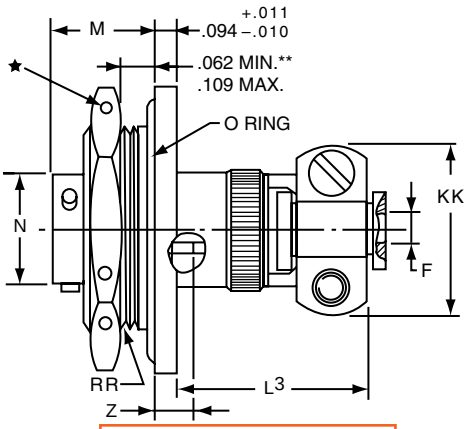

* JT07RE-XX-XXX (SR)
*** JTS07RE-XX-XXX (SR)
**** JTN07RE-XX-XXX (SR)

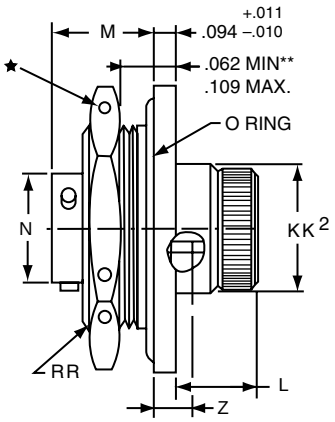

* JT07RE-XX-XXX (MS27474E)
*** JTS07RE-XX-XXX
**** JTN07RE-XX-XXX

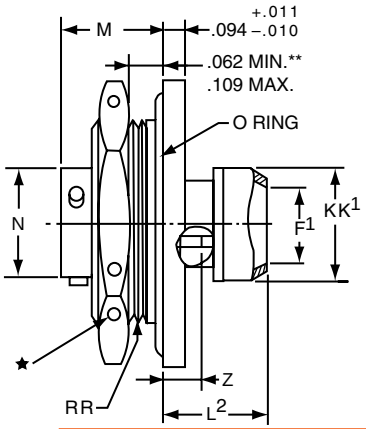

* JT07RP-XX-XXX (MS27474P)
*** JTS07RP-XX-XXX
**** JTN07RP-XX-XXX

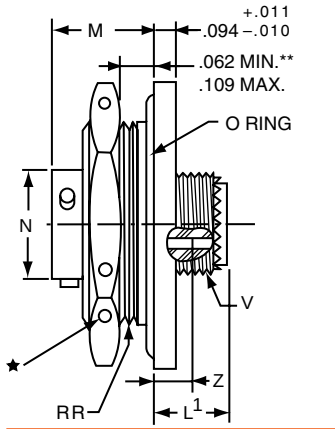

* JT07RT-XX-XXX (MS27474T)
*** JTS07RT-XX-XXX
**** JTN07RT-XX-XXX

★ .059 Dia. Min. 3 lockwire holes.
Formed lockwire hole design (6 holes) is optional.
• "D" shaped mounting hole dimensions.
* Standard Junior Tri-Lock
** Panel Thickness
*** High temperature version
****Clear iridite finish (gold color), N_2O_4 resistant

Shell Size	A• +.000 –.010	C Max.	F Dia. +.010 –.025	F¹ Dia.	H Hex +.017 –.016	L Max.	L¹ Max.	L² Max.	L³ Max.	M ±.005	N Dia. +.001 –.005	S ±.016	T• +.010 –.000	V Thread UNEF Class 2A	Z ±.031	KK Max.	KK¹ Dia. Max.	KK² Max.	RR Thread (Plated) Class 2A
8	.830	1.390	.125	.444	1.062	.484	.453	.563	1.047	.438	.473	1.250	.884	.4375-28	.144	.812	.625	.578	.8750-20UNEF
10	.955	1.515	.188	.558	1.188	.484	.453	.563	1.047	.438	.590	1.375	1.007	.5625-24	.144	.875	.750	.703	1.0000-20UNEF
12	1.084	1.640	.312	.683	1.312	.484	.453	.563	1.047	.438	.750	1.500	1.134	.6875-24	.144	1.000	.875	.828	1.1250-18UNEF
14	1.208	1.765	.375	.808	1.438	.484	.453	.563	1.297	.438	.875	1.625	1.259	.8125-20	.144	1.125	1.000	.953	1.2500-18UNEF
16	1.333	1.953	.500	.909	1.562	.484	.453	.563	1.297	.438	1.000	1.781	1.384	.9375-20	.144	1.188	1.125	1.078	1.3750-18UNEF
18	1.459	2.031	.625	1.034	1.688	.484	.453	.563	1.297	.438	1.125	1.890	1.507	1.0625-18	.144	1.438	1.250	1.203	1.5000-18UNEF
20	1.576	2.156	.625	1.159	1.812	.453	.422	.531	1.266	.464	1.250	2.016	1.634	1.1875-18	.188	1.438	1.375	1.328	1.6250-18UNEF
22	1.701	2.280	.750	1.284	2.000	.453	.422	.531	1.391	.464	1.375	2.140	1.759	1.3125-18	.188	1.625	1.500	1.453	1.7500-18UNS
24	1.826	2.405	.800	1.409	2.125	.375	.422	.609	1.391	.464	1.500	2.265	1.884	1.4375-18	.188	1.719	1.625	1.578	1.8750-16UN

All dimensions for reference only.

PART #
Commercial

Part number reference. To complete, see how to order pages 46-50.

Connector Type	Shell Style	Service Class	Shell Size & Insert Arrg	Contact Type	Alternate Position	Special Variations
JTL/JTLS/JTLN	07	RP	22-2	P	A	(XXX)

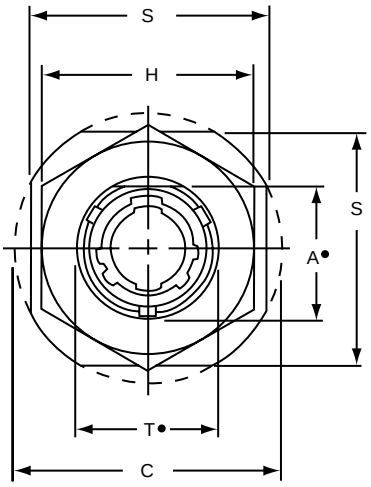

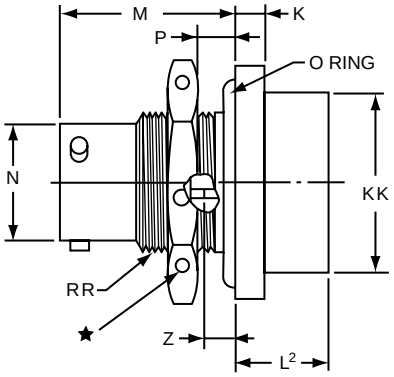

* JTL07RP-XX-XXX
*** JTLS07RP-XX-XXX
**** JTLN07RP-XX-XXX

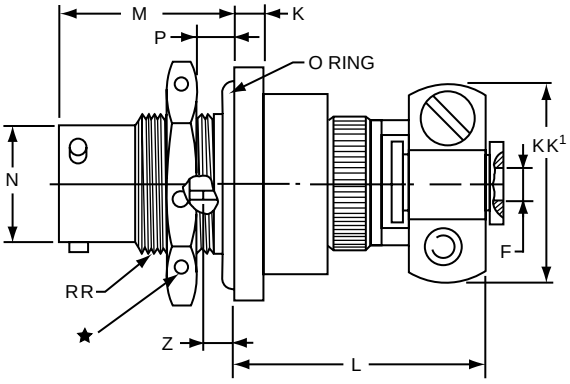

* JTL07RE-XX-XXX (SR)
*** JTLS07RE-XX-XXX (SR)
**** JTLN07RE-XX-XXX (SR)

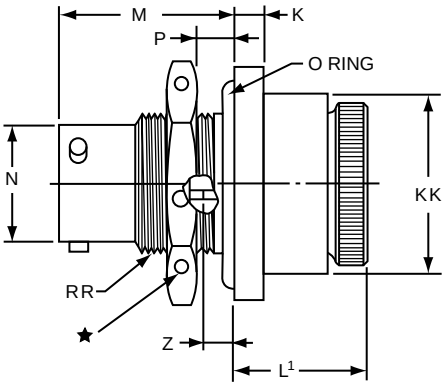

* JTL07RE-XX-XXX
*** JTLS07RE-XX-XXX
**** JTLN07RE-XX-XXX

★ .059 Dia. Min. 3 lockwire holes. Formed lockwire hole design (6 holes) is optional.
• "D" shaped mounting hole dimensions.
* Miniature mounting dimensions
*** High temperature version
****Clear iridite finish (gold color), N_2O_4 resistant

Shell Size	A• +.000 –.010	C Max.	F Dia. +.010 –.025	H Hex +.017 –.016	K +.011 –.010	L Max.	L¹ Max.	L² Max.	M ±.005	N Dia. +.001 –.005	P Panel Thickness Min.	P Panel Thickness Max.	S ±.016	T• +.010 –.000	Z ±.026	KK Dia. Max.	KK¹ Max.	RR Thread Class 2A
8	.542	1.077	.125	.750	.125	1.062	.641	.375	.630	.473	.062	.125	.938	.572	.047	.688	.812	.5625-24UNEF
10	.669	1.203	.188	.875	.125	1.062	.641	.375	.630	.590	.062	.125	1.062	.697	.047	.812	.875	.6875-24UNEF
12	.830	1.390	.312	1.062	.125	1.062	.641	.375	.630	.750	.062	.125	1.250	.844	.047	.938	1.000	.8750-20UNEF
14	.955	1.515	.375	1.188	.125	1.062	.641	.375	.630	.875	.062	.125	1.375	1.007	.047	1.062	1.125	1.0000-20UNEF
16	1.084	1.640	.500	1.312	.125	1.062	.641	.375	.630	1.000	.062	.125	1.500	1.134	.047	1.188	1.188	1.1250-18UNEF
18	1.208	1.765	.625	1.438	.125	1.062	.641	.375	.630	1.125	.062	.125	1.625	1.259	.047	1.312	1.438	1.2500-18UNEF
20	1.333	1.953	.625	1.562	.156	1.062	.703	.328	.755	1.250	.062	.250	1.812	1.384	.172	1.469	1.438	1.3750-18UNEF
22	1.459	2.075	.750	1.688	.156	1.062	.703	.328	.755	1.375	.062	.250	1.938	1.507	.172	1.594	1.625	1.5000-18UNEF
24	1.575	2.203	.800	1.812	.156	1.062	.703	.328	.755	1.500	.062	.250	2.062	1.634	.172	1.719	1.719	1.6250-18UNEF

All dimensions for reference only.

PART #
Commercial

Part number reference. To complete, see how to order pages 46-50.

Connector Type	Shell Style	Service Class	Shell Size & Insert Arrg	Contact Type	Alternate Position	Special Variations
JT/JTS/JTN	**08**	*RP*	*22-2*	*P*	*A*	*(XXX)*

Military

MS Number	Service Class	Shell Size	Finish	Insert Arrg	Contact Style (P or S)	Alternate Position
MS27500	**E**	*14*	*A*	*18*	*P*	*A*

*** JT08RP-XX-XXX**
**** JTS08RP-XX-XXX**
***** JTN08RP-XX-XXX**

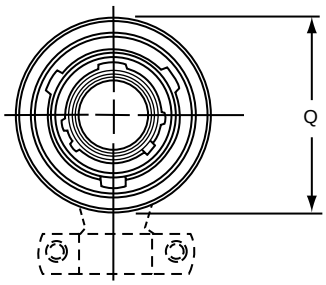

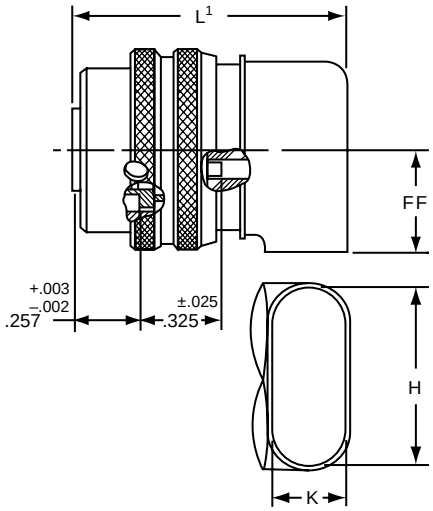

*** JT08RE-XX-XXX (MS27500E)**
**** JTS08RE-XX-XXX**
***** JTN08RE-XX-XXX**

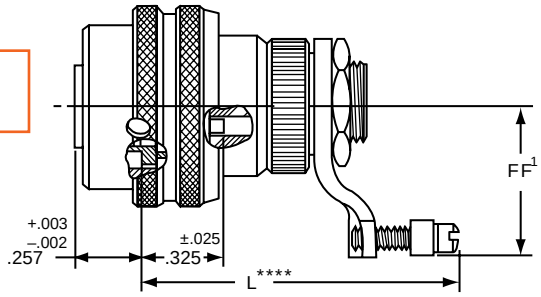

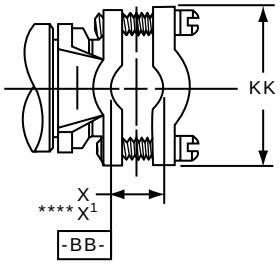

* Standard Junior Tri-Lock
** High temperature version
*** Clear iridite finish (gold color), N_2O_4 resistant
****Dimensions L and X¹ are applicable when the end of the screw is flush with the surface BB.

Shell Size	H ±.010	K ±.010	L Max.	L¹ Max.	Q Dia. Max.	X Min. Cable	X¹ Max. Cable	FF Max.	FF¹ Max.	KK Max.
8	.547	.156	1.578	1.125	.734	.082	.234	.438	.984	.755
10	.709	.188	1.578	1.156	.844	.082	.234	.516	1.016	.755
12	.829	.281	1.656	1.250	1.016	.114	.328	.594	1.078	.817
14	1.000	.438	1.844	1.406	1.141	.176	.457	.656	1.203	.943
16	1.021	.500	2.000	1.469	1.265	.238	.634	.719	1.265	1.067
18	1.145	.562	2.046	1.531	1.391	.208	.614	.781	1.328	1.149
20	1.270	.625	2.125	1.594	1.500	.302	.608	.844	1.359	1.399
22	1.395	.688	2.250	1.656	1.625	.302	.823	.906	1.421	1.399
24	1.520	.750	2.422	1.797	1.750	.332	.853	.969	1.703	1.587

All dimensions for reference only.

JT00 (MS27475) Series II – Hermetic
Wall Mounting Receptacle

PART #
Commercial

Part number reference. To complete, see how to order pages 46-50.

Connector Type	Shell Style	Service Class	Shell Size & Insert Arrg	Contact Type	Alternate Position	Special Variations
JT/JTS	*00*	*H*	*22-2*	*P*	*A*	*(XXX)*

Military

MS Number	Service Class	Shell Size	Finish	Insert Arrg	Contact Style (P or S)	Alternate Position
MS27475	**Y**	*14*	*A*	*18*	*P*	*A*
MS27482	**Y**	*14*	*A*	*18*	*P*	*A*
MS27476	**Y**	*14*	*A*	*18*	*P*	*A*

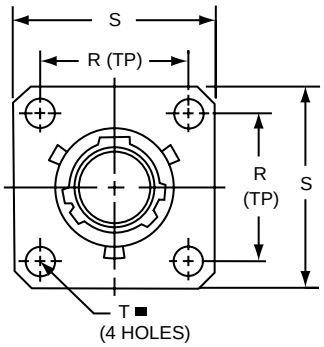

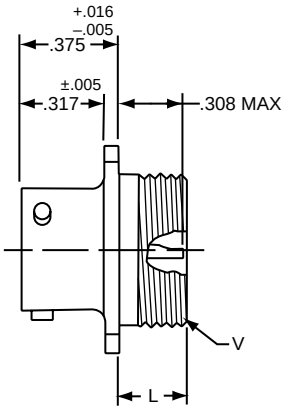

Shell Size	L Max.	N +.001 –.005	R (TP)	S ±.016	T ±.005	V Thread Class 2A
8	.234	.473	.594	.812	.120	.5625-24UNEF
10	.234	.590	.719	.938	.120	.6875-24UNEF
12	.234	.750	.812	1.031	.120	.8125-20UNEF
14	.234	.875	.906	1.125	.120	.9375-20UNEF
16	.234	1.000	.969	1.219	.120	1.0625-18UNEF
18	.234	1.125	1.062	1.312	.120	1.1875-18UNEF
20	.234	1.250	1.156	1.438	.120	1.3125-18UNEF
22	.234	1.375	1.250	1.562	.120	1.4375-18UNEF
24	.313	1.500	1.375	1.688	.147	1.5625-18UNEF

■ ⊕ .005 DIA Ⓜ

* Standard Junior Tri-Lock
** Interfacial seal wafer
*** High temperature version, interfacial seal wafer with stainless steel shell

*** JT00H-XX-XXX**
**** JT00Y-XX-XXX (MS27475YXXDXXX)**
***** JTS00Y-XX-XXX (MS27482YXXEXXX)**

JT02 (MS27476) Series II – Hermetic
Box Mounting Receptacle

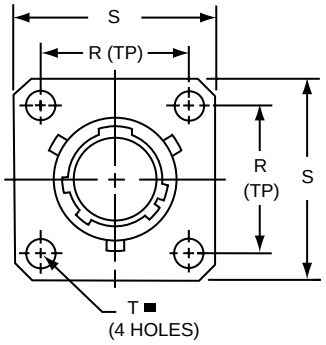

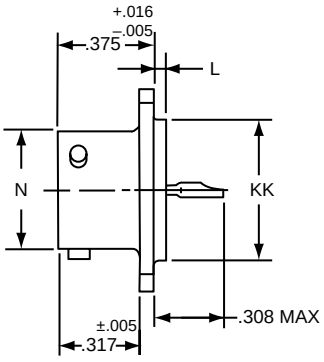

■ ⊕ .005 DIA Ⓜ

* Standard Junior Tri-Lock
** Interfacial seal wafer
*** High temperature version, interfacial seal wafer with stainless steel shell

Shell Size	L +.006 –.015	N +.001 –.005	R (TP)	S ±.016	T ±.005	KK +.001 –.005
8	.051	.473	.594	.812	.120	.562
10	.051	.590	.719	.938	.120	.672
12	.051	.750	.812	1.031	.120	.781
14	.051	.875	.906	1.125	.120	.906
16	.051	1.000	.969	1.219	.120	1.031
18	.051	1.125	1.062	1.312	.120	1.156
20	.051	1.250	1.156	1.438	.120	1.250
22	.080	1.375	1.250	1.562	.120	1.375
24	.080	1.500	1.375	1.688	.147	1.500

*** JT02H-XX-XXX**
**** JT02Y-XX-XXX (MS27476YXXDXXX)**
***** JTS02Y-XX-XXX (MS27476YXXEXXX)**

All dimensions for reference only.

JT07 (MS27477) Series II – Hermetic
Jam Nut Receptacle

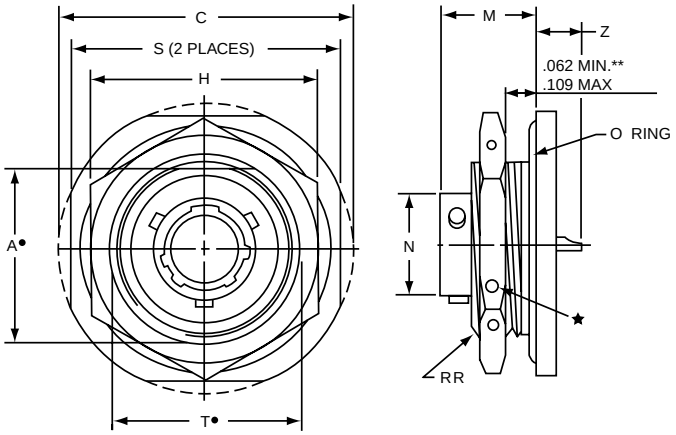

PART #
Commercial

Part number reference. To complete, see how to order pages 46-50.

Connector Type	Shell Style	Service Class	Shell Size & Insert Arrg	Contact Type	Alternate Position	Special Variations
JT/JTS	07	H	22-2	P	A	(XXX)

Military

MS Number	Service Class	Shell Size	Finish	Insert Arrg	Contact Style (P or S)	Alternate Position
MS27477	Y	14	A	18	P	A
MS27483	Y	14	A	18	P	A
MS27478	Y	14	A	18	P	A
MS27503	Y	14	A	18	P	A

* Standard Junior Tri-Lock
★.059 Dia. Min. 3 lockwire holes. Formed lockwire hole design (6 holes) is optional.
• "D" shaped mounting hole dimensions.
** Panel Thickness
*** Interfacial seal wafer
****High temperature version, interfacial seal wafer with stainless steel shell

* JT07H-XX-XXX
*** JT07Y-XX-XX (MS27477YXXDXXX)
**** JTS07Y-XX-XXX (MS27483YXXEXXX)

Shell Size	A• +.000 –.010	C Max.	H +.017 –.016	M ±.005	N +.001 –.005	S ±.016	T• +.010 –.000	Z Max.	RR Thread Class 2A
8	.830	1.390	1.062	.438	.473	1.250	.884	.244	.8750-20UNEF
10	.955	1.515	1.188	.438	.590	1.375	1.007	.244	1.0000-20UNEF
12	1.084	1.640	1.312	.438	.750	1.500	1.134	.244	1.1250-18UNEF
14	1.208	1.765	1.438	.438	.875	1.625	1.259	.244	1.2500-18UNEF
16	1.333	1.953	1.562	.438	1.000	1.781	1.384	.244	1.3750-18UNEF
18	1.459	2.031	1.688	.438	1.125	1.890	1.507	.244	1.5000-18UNEF
20	1.576	2.156	1.812	.464	1.250	2.016	1.634	.218	1.6250-18UNEF
22	1.701	2.280	2.000	.464	1.375	2.140	1.759	.218	1.7500-18UNS
24	1.826	2.405	2.125	.464	1.500	2.265	1.884	.218	1.8750-16UN

JTI (MS27478) Series II – Hermetic
Solder Mounting Receptacle

* Standard Junior Tri-Lock
** Interfacial seal wafer
*** High temperature version, interfacial seal wafer with stainless steel shell

* JTIH-XX-XXX
** JTIY-XX-XX (MS27478YXXDXXX)
*** JTSIY-XX-XXX (MS27503YXXEXXX)

Shell Size	L +.011 –.010	N +.001 –.005	GG +.011 –.010	KK +.001 –.005
8	.078	.473	.687	.562
10	.078	.590	.797	.672
12	.078	.750	.906	.781
14	.078	.875	1.031	.906
16	.078	1.000	1.156	1.031
18	.078	1.125	1.281	1.156
20	.078	1.250	1.375	1.250
22	.107	1.375	1.500	1.375
24	.107	1.500	1.625	1.500

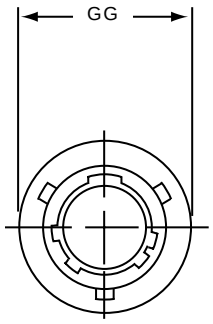

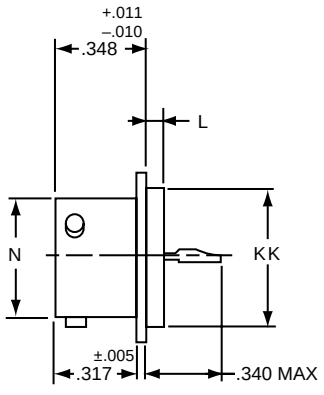

All dimensions for reference only.

All dimensions for reference only.
Weld mounting hermetic receptacle also available. Consult Amphenol, Sidney, NY for availability and dimensions.

JT00 (MS27334) Series II – Solder
Wall Mounting Receptacle

Military qualified to MIL-DTL-27599

PART #
Commercial

Part number reference. To complete, see how to order pages 46-50.

Connector Type	Shell Style	Service Class	Shell Size & Insert Arrg	Contact Type	Alternate Position	Special Variations
JT/JTN	07	RE	22-2	P	A	(XXX)

Military

MS Number	Service Class	Shell Size	Finish	Insert Arrg	Contact Style (P or S)	Alternate Position
MS27334	P	14	A	18	P	A
MS27335	T					

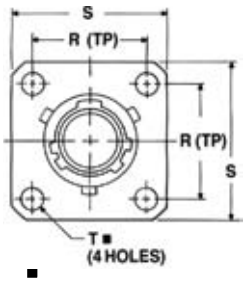

⊕ .005 DIA Ⓜ

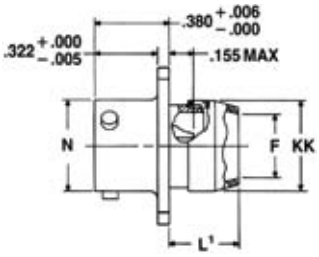

*JT00P-XX-XXX (MS27334P)
*JTN00P-XX-XXX

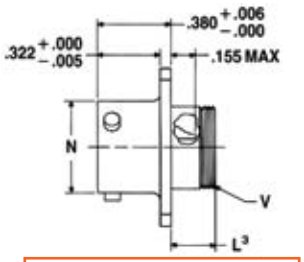

*JT00A-XX-XXX
*JT00C-XX-XXX (MS27334T)
*JTN00A-XX-XXX
*JTN00C-XX-XXX

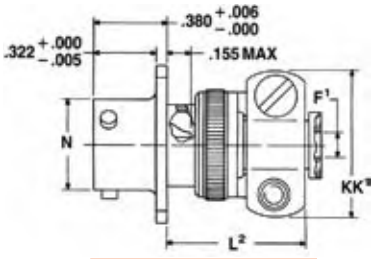

*JT00A-XX-XXX(SR)
*JTN00A-XX-XXX(SR)
*JTN00C-XX-XXX(SR)

* Standard Junior Tri-Lock
NOTE: For availability of back panel mounting types, consult Amphenol, Sidney, NY.

Shell Size	F Dia. Min.	F¹ +.010 −.025	L¹ Max.	L² Max.	L³ Max.	N +.001 −.005	R (TP)	S ±.016	T ±.005	V Thread Modified Size Class 2A	V Thread Modified Modified Major Dia.	KK Dia. Max.	KK¹ Max.
8	.312	.125	.422	.734	.234	.473	.594	.812	.120	.4375-28UNEF	.421 - .417	.500	.812
10	.429	.188	.422	.734	.234	.590	.719	.938	.120	.5625-24UNEF	.542 - .538	.625	.875
12	.543	.312	.422	.734	.234	.750	.812	1.031	.120	.6875-24UNEF	.667 - .663	.750	1.000
14	.668	.375	.422	.797	.234	.875	.906	1.125	.120	.8125-20UNEF	.791 - .787	.875	1.125
16	.793	.500	.422	.797	.234	1.000	.969	1.219	.120	.9375-20UNEF	.916 - .912	1.000	1.188
18	.894	.625	.422	.797	.234	1.125	1.062	1.312	.120	1.0625-18UNEF	1.034 - 1.030	1.109	1.438
20	1.019	.625	.422	.859	.234	1.250	1.156	1.438	.120	1.1875-18UNEF	1.158 - 1.154	1.234	1.438
22	1.144	.750	.422	.859	.234	1.375	1.250	1.562	.120	1.3125-18UNEF	1.283 - 1.279	1.359	1.625
24	1.269	.800	.422	.922	.313	1.500	1.375	1.688	.147	1.4375-18UNEF	1.408 - 1.404	1.484	1.719

JT02 (MS27335) Series II – Solder
Box Mounting Receptacle

Military qualified to MIL-DTL-27599

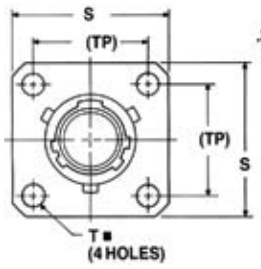

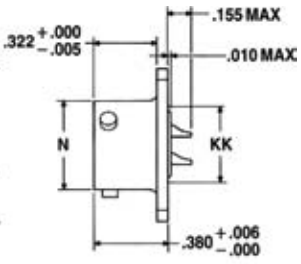

*JT02P-XX-XXX
*JT02A-XX-XXX
*JT02C-XX-XXX (MS27335T)
*JTN02P-XX-XXX
*JTN02A-XX-XXX
*JTN02C-XX-XXX

⊕ .005 DIA Ⓜ

* Standard Junior Tri-Lock
NOTE: For availability of back panel mounting types, consult Amphenol, Sidney, NY.

Shell Size	N +.001 −.005	R (TP)	S ± .016	T ± .005	KK Max.
8	.473	.594	.812	.120	.391
10	.590	.719	.938	.120	.508
12	.750	.812	1.031	.120	.622
14	.875	.906	1.125	.120	.749
16	1.000	.969	1.219	.120	.872
18	1.125	1.062	1.312	.120	.976
20	1.250	1.156	1.438	.120	1.101
22	1.375	1.250	1.562	.120	1.226
24	1.500	1.375	1.688	.147	1.351

All dimensions for reference only.

Military qualified to MIL-DTL-27599

PART # Commercial

Part number reference. To complete, see how to order pages 46-50.

Connector Type	Shell Style	Service Class	Shell Size & Insert Arrg	Contact Type	Alternate Position	Special Variations
JT/JTN/JTG/JTNG	06	RE	22-2	P	A	(XXX)

Military

MS Number	Service Class	Shell Size	Finish	Insert Arrg	Contact Style (P or S)	Alternate Position
MS27336	P	14	A	18	P	A

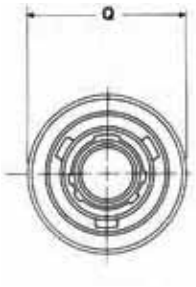

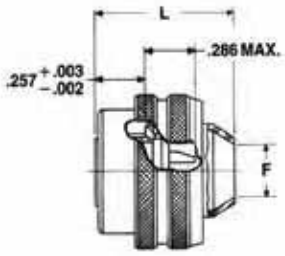

*JT06P-XX-XXX (MS27336P)
*JTN06P-XX-XXX

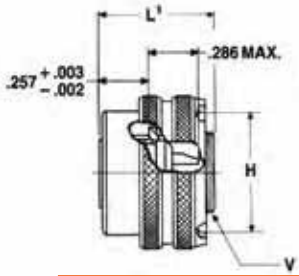

*JT06A-XX-XXX (MS27336T)
*JTN06A-XX-XXX

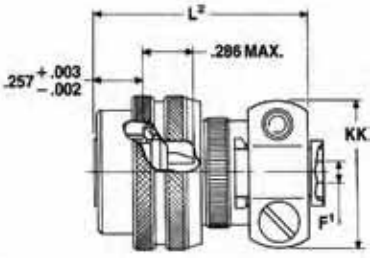

*JT06A-XX-XXX(SR)
*JTN06A-XX-XXX(SR)

*Standard Junior Tri-Lock

Shell Size	F Min.	F¹ +.010 −.025	H +.010 −.001	L Max.	L¹ Max.	L² Max.	Q Max.	V Thread Modified		KK Max.
								Size Class 2A	Modified Major Dia.	
8	.312	.125	.635	.812	.625	1.109	.734	.4375-28UNEF	.421 - .417	.812
10	.429	.188	.734	.812	.625	1.109	.844	.5625-24UNEF	.542 - .538	.875
12	.543	.312	.870	.812	.625	1.109	1.016	.6875-24UNEF	.667 - .663	1.000
14	.668	.375	.996	.812	.625	1.172	1.141	.8125-20UNEF	.791 - .787	1.125
16	.793	.500	1.122	.828	.625	1.172	1.265	.9375-20UNEF	.916 - .912	1.188
18	.894	.625	1.246	.828	.625	1.172	1.391	1.0625-18UNEF	1.034 - 1.030	1.438
20	1.019	.625	1.372	.828	.625	1.234	1.500	1.1875-18UNEF	1.158 - 1.154	1.438
22	1.144	.750	1.496	.828	.625	1.234	1.625	1.3125-18UNEF	1.283 - 1.279	1.625
24	1.269	.800	1.622	.906	.688	1.297	1.750	1.4375-18UNEF	1.408 - 1.404	1.719

Military qualified to MIL-DTL-27599

JTG06A Series II – Solder
Straight Plug (With Grounding Ring)

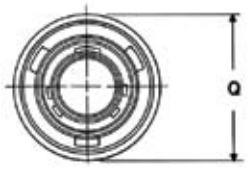

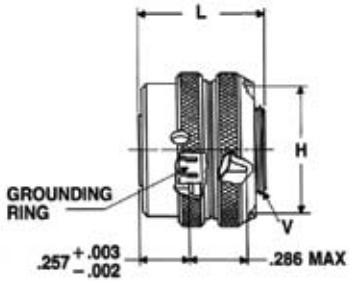

*JTG06A-XX-XXX
**JTNG06A-XX-XXX

* Plug with grounding fingers
** Coupling nut is clear iridite finish (gold color), shell and grounding fingers are gold plated N_2O_4 resistant.

Shell Size	H Dia. +.010 −.001	L Max.	Q Dia. Max.	V Thread Modified	
				Size Class 2A	Modified Major Dia.
8	.635	.625	.734	.4375-28UNEF	.421 - .417
10	.734	.625	.844	.5625-24UNEF	.542 - .538
12	.870	.625	1.016	.6875-24UNEF	.667 - .663
14	.996	.625	1.141	.8125-20UNEF	.791 - .787
16	1.122	.625	1.265	.9375-20UNEF	.916 - .912
18	1.246	.625	1.391	1.0625-18UNEF	1.034 - 1.030
20	1.372	.625	1.500	1.1875-18UNEF	1.158 - 1.154
22	1.496	.625	1.625	1.3125-18UNEF	1.283 - 1.279
24	1.622	.688	1.750	1.4375-18UNEF	1.408 - 1.404

All dimensions for reference only.

JT07 (MS27337) Series II – Solder
Jam Mounting Receptacle

Military qualified to MIL-DTL-27599

PART #
Commercial

Part number reference. To complete, see how to order pages 46-50.

Connector Type	Shell Style	Service Class	Shell Size & Insert Arrg	Contact Type	Alternate Position	Special Variations
JT/JTN	P	RE	22-2	P	A	(XXX)

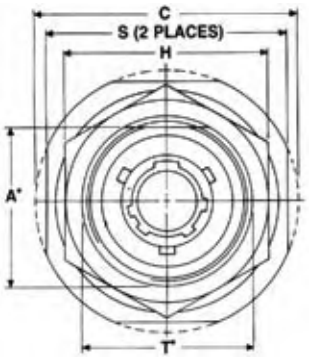

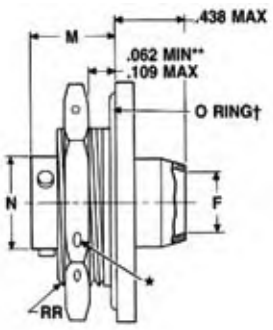

*JT07P-XX-XXX (MS27337P)
*JTN07P-XX-XXX

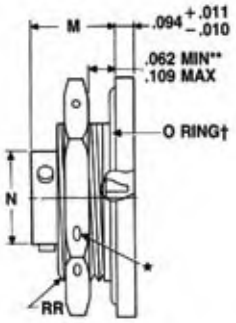

*JT07A-XX-XXX
*JT07C-XX-XXX
*JTN07A-XX-XXX
*JTN07C-XX-XXX

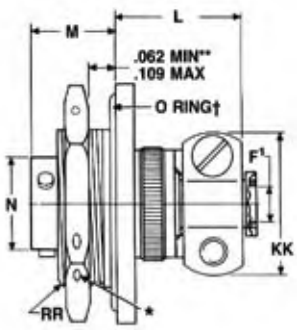

*JT07A-XX-XXX(SR)
*JTN07A-XX-XXX(SR)
*JTN07C-XX-XXX(SR)

★ .059 dia. min. 3 lockwire holes
● "D" shaped mounting hole dimensions.
* Standard Junior Tri-Lock
** Panel thickness
† O Ring not furnished with MS27337

Shell Size	A● +.000 −.010	C Max.	F Min.	F¹ +.010 −.025	H +.017 −.016	L Max.	M ±.005	N +.001 −.005	S ±.016	T● +.010 −.000	KK Max.	RR Thread Class 2A
8	.830	1.390	.312	.125	1.062	.666	.438	.473	1.250	.884	.812	.8750-20UNEF
10	.955	1.515	.429	.188	1.188	.666	.438	.590	1.375	1.007	.875	1.0000-20UNEF
12	1.084	1.640	.543	.312	1.312	.666	.438	.750	1.500	1.134	1.000	1.1250-18UNEF
14	1.208	1.765	.668	.375	1.438	.729	.438	.875	1.625	1.259	1.125	1.2500-18UNEF
16	1.333	1.953	.793	.500	1.562	.729	.438	1.000	1.781	1.384	1.188	1.3750-18UNEF
18	1.459	2.031	.894	.625	1.688	.729	.438	1.125	1.890	1.507	1.438	1.5000-18UNEF
20	1.576	2.156	1.019	.625	1.812	.765	.464	1.250	2.016	1.634	1.438	1.6250-18UNEF
22	1.701	2.280	1.144	.750	2.000	.765	.464	1.375	2.140	1.759	1.625	1.7500-18UNS
24	1.826	2.405	1.269	.800	2.125	.828	.464	1.500	2.265	1.884	1.719	1.8750-16UN

JT08 Series II – Solder
90° Plug

Military qualified to MIL-DTL-27599

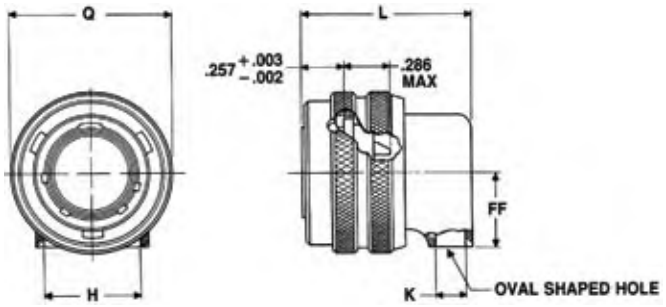

*JT08P-XX-XXX
*JTN08P-XX-XXX

* To complete order number see page 46.

Shell Size	H Min.	K Min.	L Max.	Q Max.	FF Max.
8	.396	.126	.891	.734	.391
10	.532	.141	.906	.844	.438
12	.694	.173	.938	1.016	.516
14	.814	.266	1.031	1.141	.594
16	.985	.423	1.188	1.265	.656
18	1.006	.485	1.250	1.391	.719
20	1.130	.547	1.312	1.500	.781
22	1.255	.610	1.375	1.625	.844
24	1.380	.673	1.516	1.750	.906

All dimensions for reference only.

Amphenol
MIL-DTL-38999, Series I, LJT

TABLE OF CONTENTS

Combined MIL-DTL-38999 Series I, II, III

- Shell Size & Insert Arrangements Availability 4-7
- Insert Arrangement Drawings 8-14
- Specifications - Contact Ratings, Service Ratings, Finish Data 15, 16

MIL-DTL-38999, Series II JT and Series I LJT

- Features and Benefits 45
- How to Order (Commercial). 46-48
- How to Order (Military). 49, 50

LJT Shell Styles:

- Table of Contents 67
- Crimp Wall Mounting Receptacle LJT00R (MS27466) 68
- Crimp Wall Mount Recept. for Back Panel Mounting LJTPQ00R (MS27656) . . . 69
- Crimp Line Receptacle LJT01R 70
- Crimp Box Mounting Receptacle LJT02R (MS27496), Crimp Box Mounting Receptacle for Back Panel Mounting LJTP02R (MS27505) 71
- Crimp Straight Plug LJT06R (MS27467). 72
- Crimp Jam Nut Receptacle LJT07R (MS27468). 73
- Hermetic Wall Mounting Receptacle LJT00 (MS27469) 74
- Hermetic Jam Nut Receptacle LJT07 (MS27470), Hermetic Solder Mounting Receptacle LJTL (MS27471) 75
- Solder Wall Mounting Receptacle LJT00 (MS20026), Solder Line Receptacle LJT01 (MS20027) 76
- Solder Straight Plug LJT06 (MS20028), Solder Jam Nut Receptacle LJT07 (MS20029) 77
- Breakaway Fail-Safe Lanyard Release Plug 88-5388/91-5388 (MS27661) . . 78, 79
- Breakaway Fail-Safe How to Order (Military /Commercial). 80
- Accessories, Contacts, and Tools see pages 89-108

MIL-DTL-38999 Series I Typical Markets:

- Military & Commercial Aviation
- Military Vehicles
- Missiles & Ordnance
- C4ISR

Amphenol Aerospace

PART #
Commercial

Part number reference. To complete, see how to order pages 46-50.

Connector Type	Shell Style	Service Class	Shell Size & Insert Arrg	Contact Type	Alternate Position	Special Variations
LJT	**00**	*RE*	*22-2*	*P*	*A*	*(XXX)*

Military

MS Number	Service Class	Shell Size	Finish	Insert Arrg	Contact Style (P or S)	Alternate Position
MS27466	*E*	*14*	*A*	*18*	*P*	*A*

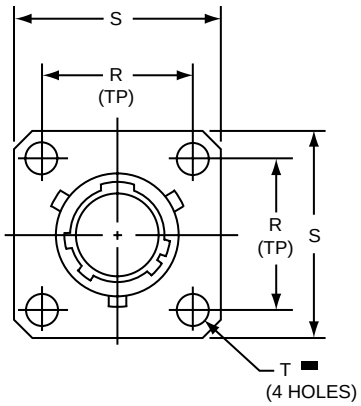

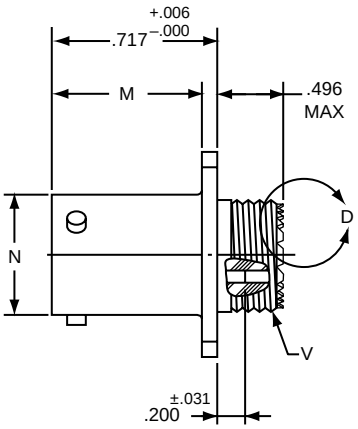

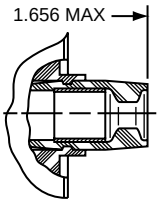

VIEW D ENLARGED
FOR COAXIAL USE ONLY

LJT00RE-XX-XXX (MS27466E)
LJT00RT-XX-XXX (MS27466T)

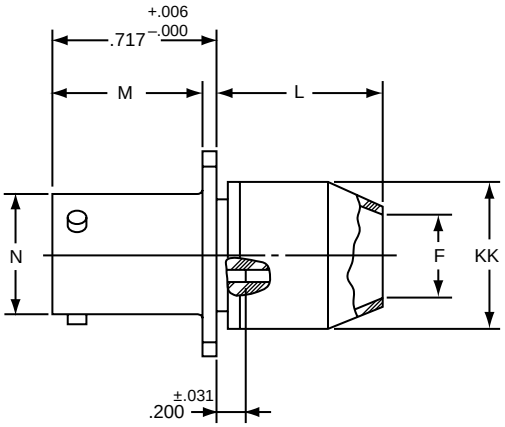

LJT00RP-XX-XXX (MS27466P)

■ ⊕ .005 DIA Ⓜ

Shell Size	F Dia. ±.010	L Max.	M +.000 −.005	N +.001 −.005	R (TP)	S ±.016	T Dia. ±.005	V Thread Class 2A (Plated)	KK Dia. Max
9	.444	.813	.632	.572	.719	.938	.128	.4375-28 UNEF	.608
11	.558	.813	.632	.700	.812	1.031	.128	.5625-24 UNEF	.734
13	.683	.813	.632	.850	.906	1.125	.128	.6875-24 UNEF	.858
15	.808	.813	.632	.975	.969	1.219	.128	.8125-20 UNEF	.984
17	.909	.813	.632	1.100	1.062	1.312	.128	.9375-20 UNEF	1.110
19	1.034	.813	.632	1.207	1.156	1.438	.128	1.0625-18 UNEF	1.234
21	1.159	.906	.602	1.332	1.250	1.562	.128	1.1875-18 UNEF	1.360
23	1.284	.906	.602	1.457	1.375	1.688	.147	1.3125-18 UNEF	1.484
25	1.409	.906	.602	1.582	1.500	1.812	.147	1.4375-18 UNEF	1.610

All dimensions for reference only.

(Back Panel Mounting)

PART #
Commercial

Part number reference. To complete, see how to order pages 46-50.

Connector Type	Shell Style	Service Class	Shell Size & Insert Arrg	Contact Type	Alternate Position	Special Variations
LJTPQ	00	RE	22-2	P	A	(XXX)

Military

MS Number	Service Class	Shell Size	Finish	Insert Arrg	Contact Style (P or S)	Alternate Position
MS27656	E	14	A	18	P	A

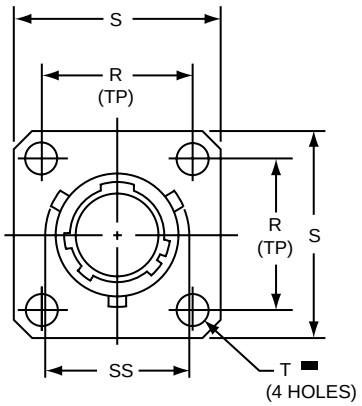

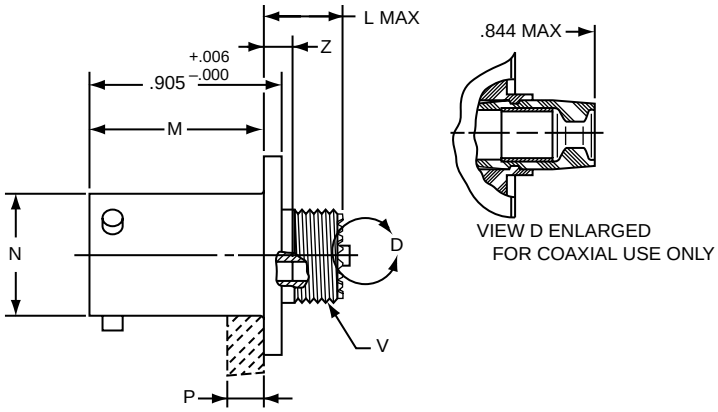

LJTPQ00RE-XX-XXX (MS27656E)
LJTPQ00RT-XX-XXX (MS27656T)

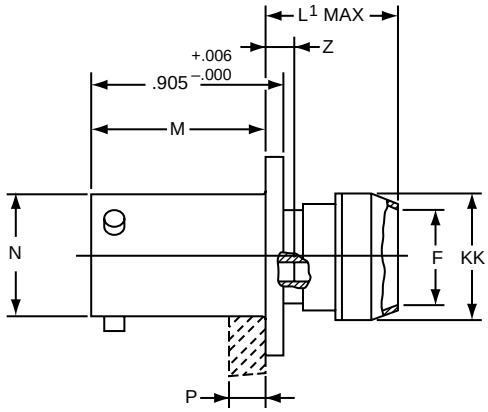

LJTPQ00RP-XX-XXX (MS27656P)

■ ⊕ .005 DIA Ⓜ

Shell Size	F Dia. ±.010	L Max.	L¹ Max.	M +.000 −.005	N Dia.	P Max. Panel Thickness	R (TP)	S +.011 −.010	T Dia. ±.005	V Thread Class 2A (Plated)	Z Max	KK Dia. Max	SS Dia. +.000 −.016
9	.444	.453	.641	.820	.572	.234	.719	.938	.128	.4375-28 UNEF	.138	.625	.662
11	.558	.453	.641	.820	.700	.234	.812	1.031	.128	.5625-24 UNEF	.138	.750	.810
13	.683	.453	.641	.820	.850	.234	.906	1.125	.128	.6875-24 UNEF	.138	.875	.960
15	.808	.453	.641	.820	.975	.234	.969	1.219	.128	.8125-20 UNEF	.138	1.000	1.085
17	.909	.453	.641	.820	1.100	.234	1.062	1.312	.128	.9375-20 UNEF	.138	1.125	1.210
19	1.034	.453	.641	.820	1.207	.234	1.156	1.438	.128	1.0625-18 UNEF	.138	1.250	1.317
21	1.159	.484	.672	.790	1.332	.204	1.250	1.562	.128	1.1875-18 UNEF	.168	1.375	1.442
23	1.284	.484	.672	.790	1.457	.204	1.375	1.688	.147	1.3125-18 UNEF	.168	1.500	1.567
25	1.409	.484	.672	.790	1.582	.193	1.500	1.812	.147	1.4375-18 UNEF	.168	1.625	1.692

All dimensions for reference only.
Note: MS27656 superseded MS 27515.

PART #
Commercial

Part number reference. To complete, see how to order pages 46-50.

Connector Type	Shell Style	Service Class	Shell Size & Insert Arrg	Contact Type	Alternate Position	Special Variations
LJT	**01**	*RE*	*22-2*	*P*	*A*	*(XXX)*

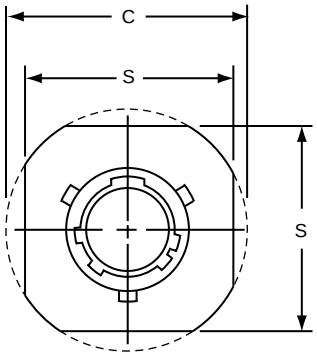

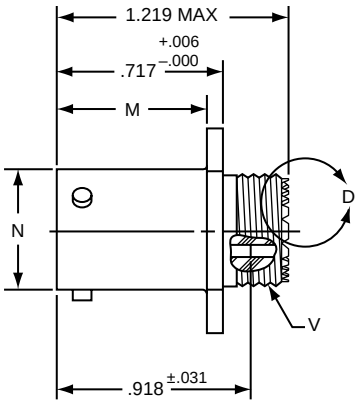

LJT01RE-XX-XXX
LJT01RT-XX-XXX

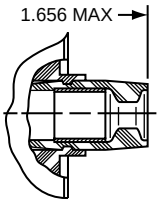

VIEW D ENLARGED
FOR COAXIAL USE ONLY

Shell Size	C Max.	M +.000 −.005	N +.001 −.005	S ±.016	V Thread Class 2A (Plated)
9	1.094	.632	.572	.938	.4375-28 UNEF
11	1.188	.632	.700	1.031	.5625-24 UNEF
13	1.281	.632	.850	1.125	.6875-24 UNEF
15	1.375	.632	.975	1.219	.8125-20 UNEF
17	1.469	.632	1.100	1.312	.9375-20 UNEF
19	1.594	.632	1.207	1.438	1.0625-18 UNEF
21	1.719	.602	1.332	1.562	1.1875-18 UNEF
23	1.844	.602	1.457	1.688	1.3125-18 UNEF
25	1.969	.602	1.582	1.812	1.4375-18 UNEF

All dimensions for reference only.

Box Mounting Receptacle (Back Panel Mounting)

PART #
Commercial

Part number reference. To complete, see how to order pages 46-50.

Connector Type	Shell Style	Service Class	Shell Size & Insert Arrg	Contact Type	Alternate Position	Special Variations
LJT/LJTP	02	RE	22-2	P	A	(XXX)

Military

MS Number	Service Class	Shell Size	Finish	Insert Arrg	Contact Style (P or S)	Alternate Position
MS27496	E	14	A	18	P	A
MS27505	E	14	A	18	P	A

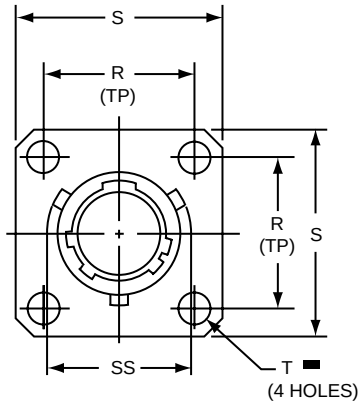

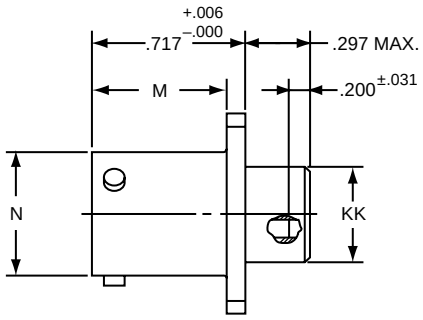

LJT02RE-XX-XXX (MS27496E)

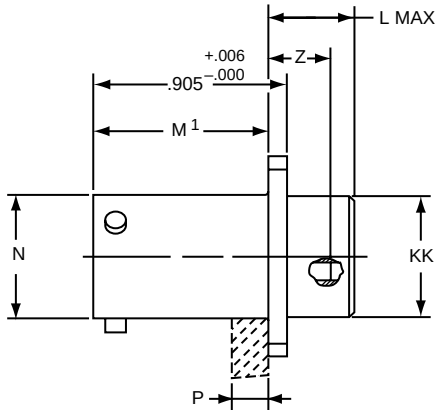

LJTP02RE-XX-XXX (MS27505E)

.005 DIA Ⓜ

Shell Size	L Max.	M +.000 −.005	M[1] +.001 −.005	N Dia +.001 −.005	P Max. Panel Thickness	R (TP)	S +.011 −.010	T Dia. ±.005	Z ±.031	KK Dia. +.006 −.005	SS Dia. +.000 −.016
9	.203	.632	.820	.572	.234	.719	.938	.128	.107	.433	.662
11	.203	.632	.820	.700	.234	.812	1.031	.128	.107	.557	.810
13	.203	.632	.820	.850	.234	.906	1.125	.128	.107	.676	.960
15	.203	.632	.820	.975	.234	.969	1.219	.128	.107	.801	1.085
17	.203	.632	.820	1.100	.234	1.062	1.312	.128	.107	.926	1.210
19	.203	.632	.820	1.207	.234	1.156	1.438	.128	.107	1.032	1.317
21	.234	.602	.790	1.332	.204	1.250	1.562	.128	.137	1.157	1.442
23	.234	.602	.790	1.457	.204	1.375	1.688	.147	.137	1.282	1.567
25	.234	.602	.790	1.582	.193	1.500	1.812	.147	.137	1.407	1.692

All dimensions for reference only.

PART

Part number reference. To complete, see how to order pages 46-50.

Commercial

Connector Type	Shell Style	Service Class	Shell Size & Insert Arrg	Contact Type	Alternate Position	Special Variations
LJT	**06**	*RE*	*22-2*	*P*	*A*	*(XXX)*

Military

MS Number	Service Class	Shell Size	Finish	Insert Arrg	Contact Style (P or S)	Alternate Position
MS27467	*E*	*14*	*A*	*18*	*P*	*A*

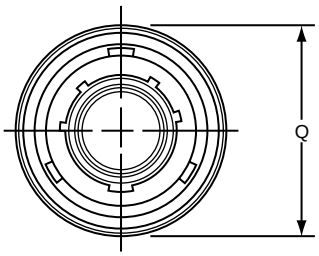

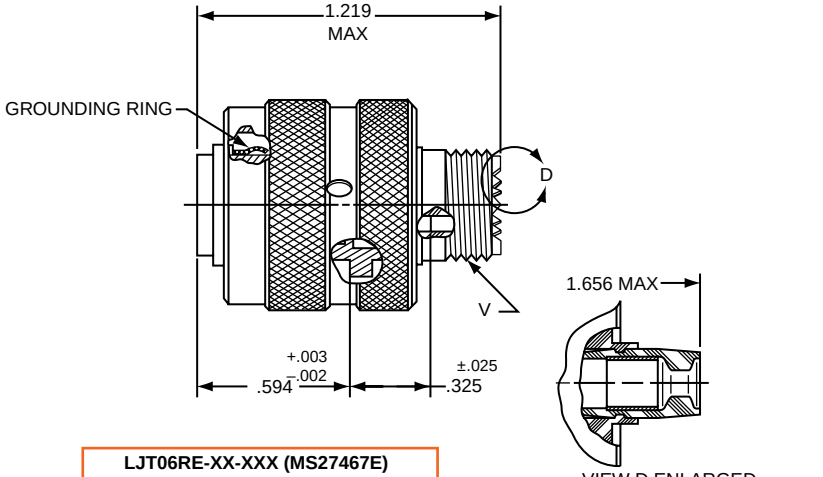

LJT06RE-XX-XXX (MS27467E)
LJT06RT-XX-XXX (MS27467T)

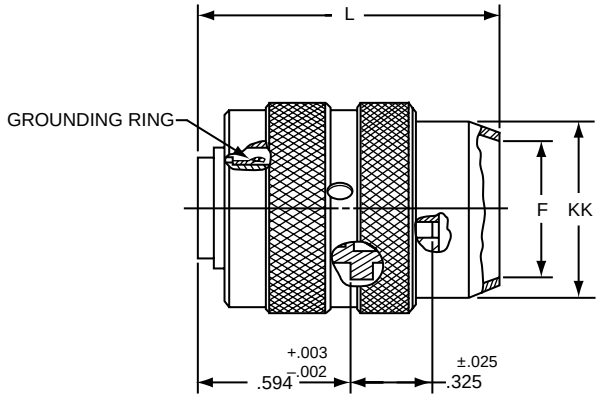

LJT06RP-XX-XXX (MS27467P)

Shell Size	F Dia. ±.010	L Max.	Q Max.	V Thread Class 2A (Plated)	KK Dia. Max.
9	.444	1.531	.844	.4375-28 UNEF	.608
11	.528	1.531	.969	.5625-24 UNEF	.734
13	.683	1.531	1.141	.6875-24 UNEF	.858
15	.808	1.531	1.266	.8125-20 UNEF	.984
17	.909	1.531	1.391	.9375-20 UNEF	1.110
19	1.034	1.531	1.500	1.0625-18 UNEF	1.234
21	1.159	1.625	1.625	1.1875-18 UNEF	1.360
23	1.284	1.625	1.750	1.3125-18 UNEF	1.484
25	1.409	1.625	1.875	1.4375-18 UNEF	1.610

All dimensions for reference only.

Amphenol Aerospace

PART #
Commercial

Part number reference. To complete, see how to order pages 46-50.

Connector Type	Shell Style	Service Class	Shell Size & Insert Arrg	Contact Type	Alternate Position	Special Variations
LJT	07	RE	22-2	P	A	(XXX)

Military

MS Number	Service Class	Shell Size	Finish	Insert Arrg	Contact Style (P or S)	Alternate Position
MS27498	E	14	A	18	P	A

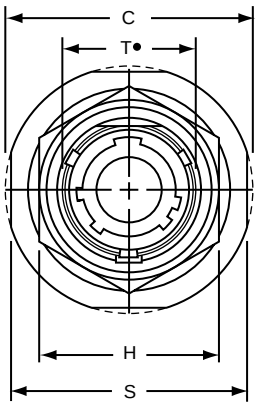

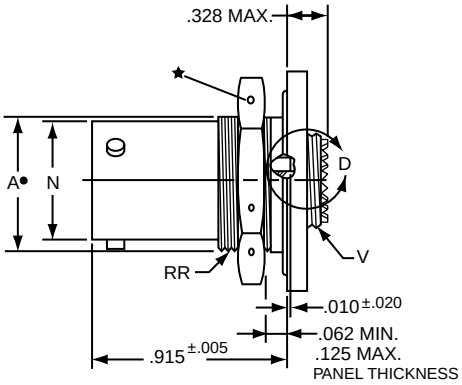

LJT07RE-XX-XXX (MS27468E)
LJT07RT-XX-XXX (MS27468T)

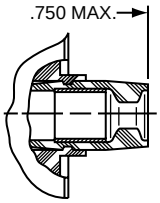

VIEW D ENLARGED
FOR COAXIAL USE ONLY

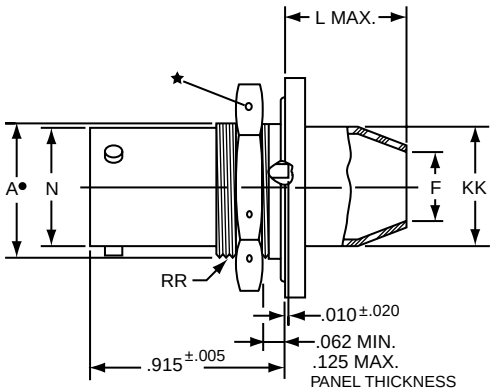

LJT07RP-XX-XXX (MS27468P)

★ .059 Dia. Min. 3 lockwire holes.
Formed lockwire hole design (6 holes) is optional.
• "D" shaped mounting hole dimensions.

Shell Size	A• +.000 −.010	C Max.	F Dia. ±.010	H Hex +.017 −.016	L Max.	N +.001 −.005	S ±.016	T• +.010 −.000	V Thread Class 2A (Plated)	KK Dia. Max.	RR Thread Class 2A (Plated)
9	.669	1.199	.444	.875	.625	.572	1.062	.697	.4375-28 UNEF	.608	.6875-24 UNEF
11	.769	1.386	.558	1.000	.625	.700	1.250	.822	.5625-24 UNEF	.734	.8125-20 UNEF
13	.955	1.511	.683	1.188	.625	.850	1.375	1.007	.6875-24 UNEF	.858	1.0000-20 UNEF
15	1.084	1.636	.808	1.312	.625	.975	1.500	1.134	.8125-20 UNEF	.984	1.1250-18 UNEF
17	1.208	1.761	.909	1.438	.625	1.100	1.625	1.259	.9375-20 UNEF	1.110	1.2500-18 UNEF
19	1.333	1.949	1.034	1.562	.656	1.207	1.812	1.384	1.0625-18 UNEF	1.234	1.3750-18 UNEF
21	1.459	2.073	1.159	1.688	.750	1.332	1.938	1.507	1.1875-18 UNEF	1.360	1.5000-18 UNEF
23	1.580	2.199	1.284	1.812	.750	1.457	2.062	1.634	1.3125-18 UNEF	1.484	1.6250-18 UNEF
25	1.709	2.323	1.409	2.000	.750	1.582	2.188	1.759	1.4375-18 UNEF	1.610	1.7500-18 UNS

All dimensions for reference only.

PART #
Commercial

Part number reference. To complete, see how to order pages 46-50.

Connector Type	Shell Style	Service Class	Shell Size & Insert Arrg	Contact Type	Alternate Position	Special Variations
LJT/LJTS	**00**	*Y*	*22-2*	*P*	*A*	*(XXX)*

Military

MS Number	Service Class	Shell Size	Finish	Insert Arrg	Contact Style (P or S)	Alternate Position
MS27469	**Y**	*14*	*D*	*18*	*P*	*A*

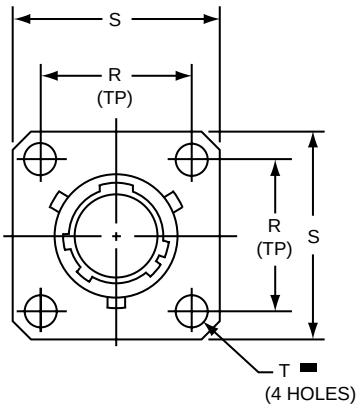

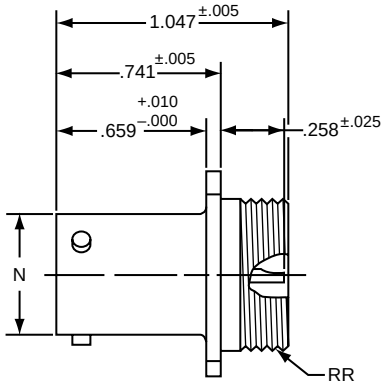

* LJT00H-XX-XXX
** LJT00Y-XX-XXX (MS27469YXXD)
*** LJTS00Y-XX-XXX (MS27469YXXE)

▬ ⌖ .005 DIA Ⓜ

* Long Junior Tri-Lock
** Interfacial seal wafer
*** High temperature version, interfacial seal wafer with stainless steel shell

Shell Size	N Dia. +.001 –.005	R (TP)	S ±.016	T Dia. ±.005	RR Thread Class 2A
9	.572	.719	.938	.128	.6875-24 UNEF
11	.700	.812	1.031	.128	.8125-20 UNEF
13	.850	.906	1.125	.128	.9375-20 UNEF
15	.975	.969	1.219	.128	1.0625-18 UNEF
17	1.100	1.062	1.312	.128	1.1875-18 UNEF
19	1.207	1.156	1.438	.128	1.3125-18 UNEF
21	1.332	1.250	1.562	.128	1.4375-18 UNEF
23	1.457	1.375	1.688	.147	1.5625-18 UNEF
25	1.582	1.500	1.812	.147	1.6875-18 UNEF

All dimensions for reference only.

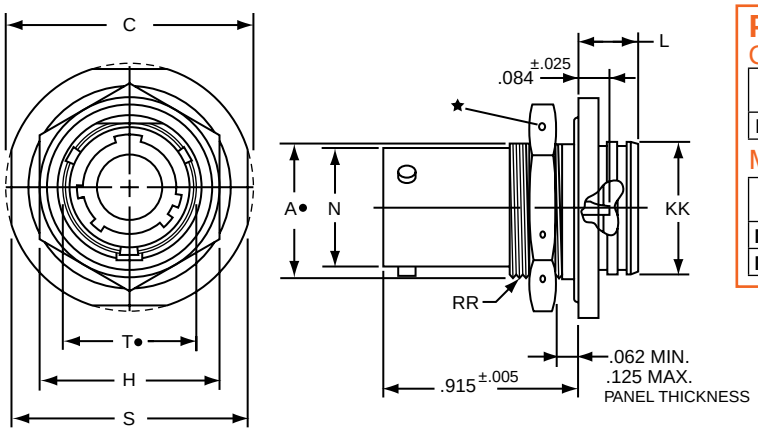

PART #
Commercial

Part number reference. To complete, see how to order pages 46-50.

Connector Type	Shell Style	Service Class	Shell Size & Insert Arrg	Contact Type	Alternate Position	Special Variations
LJT/LJTS	*H*	*RE*	*22-2*	*P*	*A*	*(XXX)*

Military

MS Number	Service Class	Shell Size	Finish	Insert Arrg	Contact Style (P or S)	Alternate Position
MS27470	**Y**	*14*	*A*	*18*	*P*	*A*
MS27471	**Y**	*14*	*A*	*18*	*P*	*A*

Shell Size	A• +.000 –.010	C Max.	H Hex +.017 –.016	L Max.	N +.000 –.005	S ±.016	T• +.010 –.000	KK +.011 –.000	RR Thread Class 2A (Plated)
9	.669	1.199	.875	.297	.572	1.062	.697	.642	.6875-24 UNEF
11	.769	1.386	1.000	.297	.700	1.250	.822	.766	.8125-20 UNEF
13	.955	1.511	1.188	.297	.850	1.375	1.007	.892	1.0000-20 UNEF
15	1.084	1.636	1.312	.297	.975	1.500	1.134	1.018	1.1250-18 UNEF
17	1.208	1.761	1.438	.297	1.100	1.625	1.259	1.142	1.2500-18 UNEF
19	1.333	1.949	1.562	.328	1.207	1.812	1.384	1.268	1.3750-18 UNEF
21	1.459	2.073	1.688	.328	1.332	1.938	1.507	1.392	1.5000-18 UNEF
23	1.580	2.199	1.812	.328	1.457	2.062	1.634	1.518	1.6250-18 UNEF
25	1.709	2.328	2.000	.328	1.582	2.188	1.759	1.642	1.7500-18 UNS

All dimensions for reference only.

* LJT07H-XX-XXX
** LJT07Y-XX-XXX (MS27470YXXD)
*** LJTS07Y-XX-XXX (MS27470YXXE)

★ .059 Dia. Min. 3 lockwire holes. Formed lockwire hole design (6 holes) is optional.
• "D" shaped mounting hole dimensions.
* *Long Junior Tri-Lock
** Interfacial seal wafer
*** High temperature version, interfacial seal wafer with stainless steel shell

LJTI (MS27471) Series I
– Hermetic Solder Mounting Receptacle

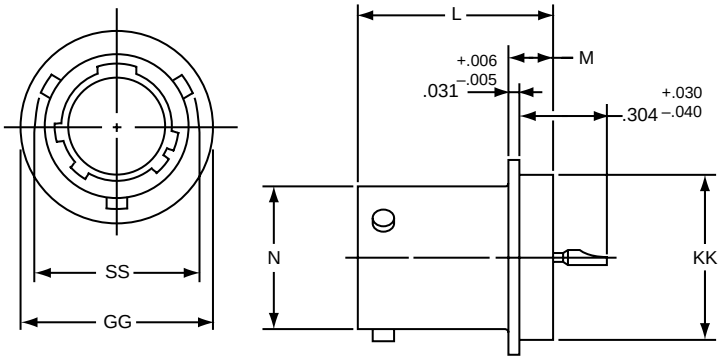

* Long Junior Tri-Lock
** Interfacial seal wafer
*** High temperature version, interfacial seal wafer with stainless steel shell

Shell Size	N Dia. +.001 –.005	SS Dia. +.000 –.016	L +.011 –.000	M +.006 –.005	GG Dia. +.011 –.010	KK Dia. +.001 –.005
9	.572	.662	.789	.125	.750	.672
11	.700	.810	.789	.125	.844	.781
13	.850	.960	.789	.125	.969	.906
15	.975	1.085	.789	.125	1.094	1.031
17	1.100	1.210	.789	.125	1.218	1.156
19	1.207	1.317	.789	.125	1.312	1.250
21	1.332	1.442	.789	.125	1.438	1.375
23	1.457	1.567	.821	.156	1.563	1.500
25	1.582	1.692	.821	.156	1.688	1.625

* LJTIH-XX-XXX
** LJTIY-XX-XXX (MS27471YXXD)
*** LJTSIY-XX-XXX (MS27471YXXE)

All dimensions for reference only.
Weld mounting hermetic receptacle also available.
Consult Amphenol, Sidney, NY for availability and dimensions.

LJT00 (MS20026) Series I – Solder
Wall Mounting Receptacle

Military qualified to MIL-DTL-27599

PART #
Commercial

Part number reference. To complete, see how to order pages 46-50.

Connector Type	Shell Style	Service Class	Shell Size & Insert Arrg	Contact Type	Alternate Position	Special Variations
LJT	00	P	22-2	P	A	(XXX)

Military

MS Number	Service Class	Shell Size	Finish	Insert Arrg	Contact Style (P or S)	Alternate Position
MS20026	T	14	A	18	P	A
MS20027	T	14	A	18	P	A

LJT00T-XX-XXX (MS20026T)

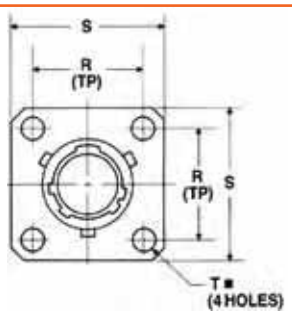

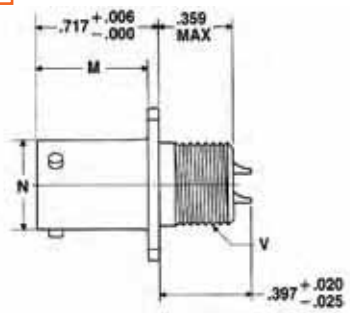

■ Ⓢ .005 DIA Ⓜ

LJT00P-XX-XXX

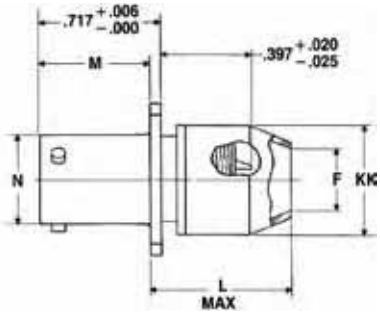

NOTE: For availability of back panel mounting types, check with nearest sales office or call Amphenol, Sidney, NY.

Shell Size	F Dia.	L Max.	M +.000 −.005	N +.001 −.005	R (TP)	S ±.016	T Dia. ±.005	V Thread Class 2A UNEF (Plated)	KK Dia. Max.
9	.327	.625	.632	.572	.719	.938	.128	.4375-28	.608
11	.444	.625	.632	.700	.812	1.031	.128	.5625-24	.734
13	.558	.625	.632	.850	.906	1.125	.128	.6875-24	.858
15	.683	.625	.632	.975	.969	1.219	.128	.8125-20	.984
17	.808	.625	.632	1.100	1.062	1.312	.128	.9375-20	1.110
19	.909	.625	.632	1.207	1.156	1.438	.128	1.0625-18	1.234
21	1.034	.703	.602	1.332	1.250	1.562	.128	1.1875-18	1.360
23	1.159	.703	.602	1.457	1.375	1.688	.147	1.3125-18	1.484
25	1.284	.703	.602	1.582	1.500	1.812	.147	1.4375-18	1.610

LJT01 (MS20027) Series I – Solder
Line Receptacle

Military qualified to MIL-DTL-27599

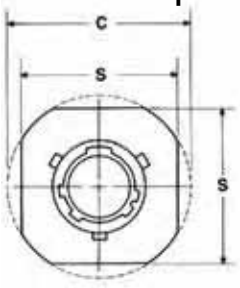

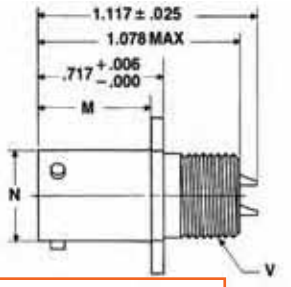

LJT01T-XX-XXX (MS20027T)

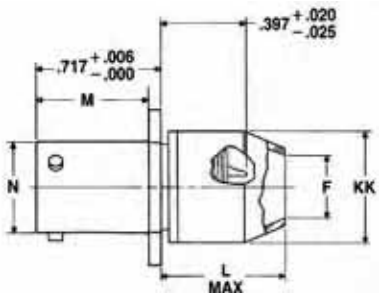

LJT01P-XX-XXX

Shell Size	C Max.	F Dia.	L Max.	M +.000 −.005	N +.001 −.005	S ±.016	V Thread Class 2A UNEF (Plated)	KK Dia. Max.
9	1.094	.327	.625	.632	.572	.938	.4375-28	.608
11	1.188	.444	.625	.632	.700	1.031	.5625-24	.734
13	1.281	.558	.625	.632	.850	1.125	.6875-24	.858
15	1.375	.683	.625	.632	.975	1.219	.8125-20	.984
17	1.469	.808	.625	.632	1.100	1.312	.9375-20	1.110
19	1.594	.909	.625	.632	1.207	1.438	1.0625-18	1.234
21	1.719	1.034	.703	.602	1.332	1.562	1.1875-18	1.360
23	1.844	1.159	.703	.602	1.457	1.688	1.3125-18	1.484
25	1.969	1.284	.703	.602	1.582	1.812	1.4375-18	1.610

All dimensions for reference only.

LJT06 (MS20028) Series I – Solder
Straight Plug

Military qualified to MIL-DTL-27599

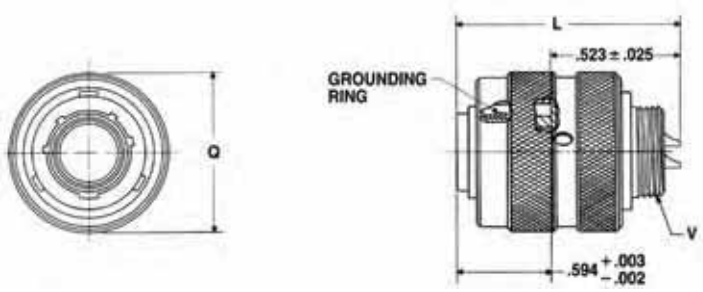

PART #
Commercial

Part number reference. To complete, see how to order pages 46-50.

Connector Type	Shell Style	Service Class	Shell Size & Insert Arrg	Contact Type	Alternate Position	Special Variations
LJT	06	T	22-2	P	A	(XXX)

Military

MS Number	Service Class	Shell Size	Finish	Insert Arrg	Contact Style (P or S)	Alternate Position
MS20028	**T**	14	A	18	P	A
MS20029	T	14	A	18	P	A

LJT06T-XX-XXX (MS20028T)

Shell Size	F Dia.	L Max.	L¹ Max.	Q Max.	V Thread Class 2A UNEF (Plated)	KK Dia. Max.
9	.327	1.128	1.488	.844	.4375-28	.608
11	.444	1.128	1.488	.969	.5625-24	.734
13	.558	1.128	1.488	1.141	.6875-24	.858
15	.683	1.128	1.488	1.266	.8125-20	.984
17	.808	1.128	1.488	1.391	.9375-20	1.110
19	.909	1.128	1.488	1.500	1.0625-18	1.234
21	1.034	1.128	1.566	1.625	1.1875-18	1.360
23	1.159	1.128	1.566	1.750	1.3125-18	1.484
25	1.284	1.191	1.644	1.875	1.4375-18	1.610

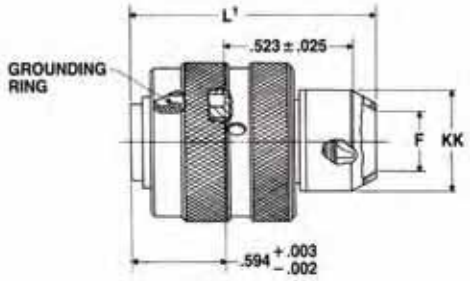

LJT06P-XX-XXX

LJT07 (MS20029) Series I – Solder
Jam Nut Receptacle

Military qualified to MIL-DTL-27599

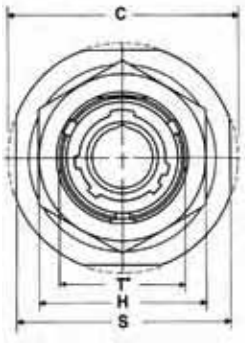

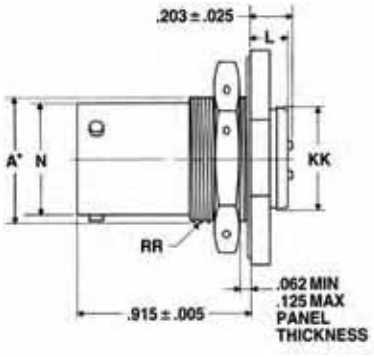

LJT07T-XX-XXX (MS20029T)

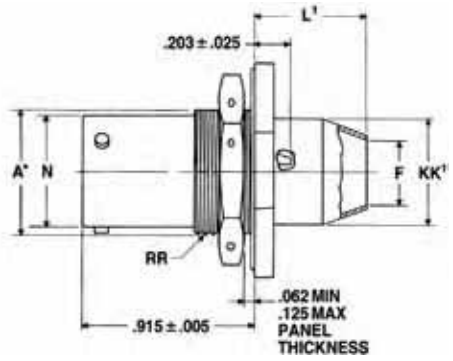

LJT07P-XX-XXX (MS20029P)

• "D" shaped mounting hole dimensions

Shell Size	A• +.000 −.010	C Max.	F Dia.	H Hex +.017 −.016	L Max.	L¹ Max.	N +.001 −.005	S ±.016	T• +.010 −.000	KK +.011 −.000	KK¹ Dia. Max.	RR Thread Class 2A (Plated)
9	.669	1.199	.327	.875	.234	.625	.572	1.062	.697	.516	.608	.6875-24UNEF
11	.769	1.386	.444	1.000	.234	.625	.700	1.250	.822	.642	.734	.8125-20UNEF
13	.955	1.511	.558	1.188	.234	.625	.850	1.375	1.007	.766	.858	1.0000-20UNEF
15	1.084	1.636	.683	1.312	.234	.625	.975	1.500	1.134	.892	.984	1.1250-18UNEF
17	1.208	1.761	.808	1.438	.234	.625	1.100	1.625	1.259	1.018	1.110	1.2500-18UNEF
19	1.333	1.949	.909	1.562	.266	.625	1.207	1.812	1.384	1.142	1.234	1.3750-18UNEF
21	1.459	2.073	1.034	1.688	.266	.656	1.332	1.938	1.507	1.268	1.360	1.5000-18UNEF
23	1.580	2.199	1.159	1.812	.266	.750	1.457	2.062	1.634	1.392	1.484	1.6250-18UNEF
25	1.709	2.323	1.284	2.000	.266	.750	1.582	2.188	1.759	1.518	1.610	1.7500-18UNS

All dimensions for reference only.

INSERT AVAILABILITY

Shell Size / Insert Arrangement	Service Rating	Total Contacts	Contact Size						
			22D	20	16	12	12 Coax	8 Coax*	8 Twinax
11-2	I	2			2				
11-35	M	13	13						
11-98	I	6		6					
13-4	I	4			4				
13-8	I	8		8					
13-35	M	22	22						
13-98	I	10		10					
15-5	II	5			5				
15-15	I	15		14	1				
15-18	I	18		18					
15-19	I	19		19					
15-35	M	37	37						
15-97	I	12		8	4				
17-6	I	6				6			
17-8	II	8			8				
17-26	I	26		26					
17-35	M	55	55						
17-99	I	23		21	2				
19-11	II	11			11				
19-32	I	32		32					
19-35	M	66	66						
21-11	I	11				11			
21-16	II	16			16				
21-35	M	79	79						
21-39	I	39		37	2				
21-41	I	41		41					
23-21	II	21			21				
23-35	M	100	100						
23-53	I	53		53					
23-54	M	53	40		9	4			
23-55	I	55		55					
25-4	I	56		48	8				
25-19	I	19				19			
25-20	N	30		10	13		4		3
25-24	I	24			12	12			
25-29	I	29			29				
25-35	M	128	128						
25-43	I	43		23	20				
25-46	I	46		40	4			2*	
25-61	I	61		61					

LJT Lanyard Separation Forces		
Shell Size	Straight Plug (lbs. max.)	15 Degree Pull (lbs. Max.)
11 13 15	45	55
17 19 21 23 25	90	100

* For RG 180/U and RG 195/U cables only. (Check Amphenol Aerospace, Sidney, NY for other cable applications). For availability of other insert arrangements and accessories consult Amphenol Aerospace.

TABLE I
INSERT ARRANGEMENT CODE

Basic Part Number	MIL-DTL-38999 Insert Arrangement
88/91-538808	11-2
06	11-35
07	11-98
10	13-4
11	13-8
13	13-98
14	13-35
18	15-5
23	15-15
22	15-18
19	15-19
20	15-35
27	17-6
28	17-8
29	17-26
30	17-35
31	17-99
37	19-11
39	19-32
40	19-35
47	21-11
48	21-16
49	21-35
50	21-41
51	21-39
57	23-21
58	23-35
59	23-53
61	23-54
60	23-55
66	25-19
74	25-20
67	25-29
68	25-35
69	25-43
70	25-61
71	25-46
72	25-2
74	25-4

TABLE II
LANYARD LENGTH CODES

Lanyard Length (in.) ±.250	MS	Commercial Code
4.000		40
4.250		41
4.500		42
4.750		43
5.000		50
5.250		51
5.500		52
5.750		53
6.000	No	60
6.250	Code	61
6.500		62
6.750	Std.	63
7.000	Length	70
7.250	6.250	71
7.500		72
7.750		73
8.000		80
8.250		81
8.500		82
8.750		83
9.000		90
9.250		91
9.500		92
9.750		93

HOW TO ORDER - BY MILITARY PART NUMBER FAIL SAFE MS27661

1. MS Number	2. Service Class	3. Shell Size	4. Finish	5. Insert Arrg.	6. Contact Style	7. Alternate Position
MS27661	T	17	B	35	P	A

1. MS27661 Number

MS Number designates MIL-DTL-38999, Series I LJT Lanyard Release Plug

2. Select a Service Class

E	For environmental crimp applications (inactive for new design)
T	For environmental crimp applications with serrations on rear threads of shell

3. Select a Shell Size

MIL-DTL-38999, sizes 11 through 25, see chart on page 78.

4. Select a Finish

B	Designates corrosion resistant olive drab cadmium plated aluminum, 500 hour extended salt spray, EMI shielding effectiveness –50dB @ 10 GHz specification min., 175°C
F	Designates electroless nickel plated aluminum, 48 hour salt spray, EMI shielding effectiveness –65dB @10 GHz500 specification min., 200°C

These are standard finishes. Consult Amphenol Aerospace for variations.

5. Select an Insert Arrangement

MIL-DTL-38999, see insert identification chart on page 78.

6. Select a Contact Style

P	Designates Lanyard Release plug with pin contacts
S	Designates Lanyard Release plug with socket contacts

7. Alternate Keying Position

For alternate Position of connector (to prevent cross-mating) see LJT key/keyway rotation below. (No letter is required for normal)

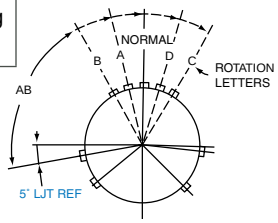

RELATIVE POSSIBLE POSITION OF ROTATED MASTER KEYWAY (front face of receptacle shown)

LJT Key/Keyway Rotation

AB ANGLE OF ROTATION (Degrees)					
Shell Size	Normal	A	B	C	D
9	95°	77°	-	-	113°
11	95°	81°	67°	123°	109°
13	95°	75°	63°	127°	115°
15	95°	74°	61°	129°	116°
17	95°	77°	65°	125°	113°
19	95°	77°	65°	125°	113°
21	95°	77°	65°	125°	113°
23	95°	80°	69°	121°	110°
25	95°	80°	69°	121°	110°

HOW TO ORDER - BY COMMERCIAL PART NUMBER FAIL SAFE 88-5388 OR 91-5388

1. Finish	2. Connector Type Identification	3. Shell Size & Insert Arrangement	4. Lanyard Length Code	5. Contact Type Alternate Rotation of Insert
88	5388	29	40	P

1. Select a Finish

88	Designates corrosion resistant olive drab cadmium plate over nickel, 500 hour extended salt spray, EMI –50dB @ 10 GHz specification min., 175°C
91	Designates electroless nickel plated aluminum, optimum EMI shielding effectiveness –65dB @ 10 GHz specification min., 48 hour salt spray, 200°C

These are standard finishes. Consult Amphenol Aerospace, Sidney, NY for variations.

2. Connector Type Identification

5388	Designates MIL-DTL-38999, Series I LJT Lanyard Release Plug

3. Select a Shell Size and Insert Arrangement

Shell sizes are MIL-DTL-38999, Series III from sizes 11 thru 25. The basic part number selected specifies the insert arrangement. See Table I (page 78) for coded part number that correlates to insert arrangement.

4. Select a Lanyard Length Code

See Table II (page 78) for lanyard length code number.

5. Select a Contact Type/Alternate Rotation of Insert

P	Designates Lanyard Release plug with pin contacts
S	Designates Lanyard Release plug with socket contacts

When an alternate position of the connector is required to prevent cross-mating, a different letter (other than P or S) is used. See alternate positioning for LJT (to your left), then convert to Amphenol commercial coding by the following chart below.

Pin Contacts		Socket Contacts	
MS Letter	Amphenol Letter	MS Letter	Amphenol Letter
P	P (normal)	S	S (normal)
PA	E	SA	F
PB	R	SB	T
PC	W	SC	X
PD	Y	SD	Z

Series I, LJT Breakaway Fail Safe
Quick-Disconnect with Axial Pull of Lanyard

Amphenol LJT Breakaway Fail Safe Connectors provide unequaled performance in environments requiring instant disengagement.

Designed to provide quick disconnect of a connector plug and receptacle with an axial pull on the lanyard, the "Breakaway" Fail Safe connector family offers a wide range of electrical and mechanical features:

- Instant decoupling and damage free separation
- Completely intermateable with standard LJT receptacles
- Inventory support commonality through the use of standard insert arrangements and contacts

Breakaway un-mating is initiated by applying a pull force to the lanyard which causes the operating sleeve on the plug to move away from the receptacle. Coupling segments on the plug then move away from the mating receptacle while expanding, thus releasing the receptacle. After completion of the un-mating sequence, spring compression returns the sleeve and segments to their original positions. Un-mating of the plug may also be accomplished by normal rotation of the coupling ring without affecting the breakaway capability.

The LJT Breakaway Fail Safe connector features which provide EMI EMP shielding in excess of MIL-DTL-38999 Series I requirements:

- Solid metal-to-metal coupling
- EMI grounding fingers
- Conductive finishes

Contact Amphenol Aerospace for more information on breakaway, quick-disconnect connectors. Other Amphenol cylindrical families (MIL-DTL-38999 Series III, MIL-DTL-26482, MIL-DTL-83723) also offer breakaway quick-disconnect connectors.

PART #
Commercial

Part number reference. To complete, see how to order pages 79.

Connector Type	Shell Style	Service Class	Shell Size & Insert Arrg	Contact Type	Alternate Position	Special Variations
88/91	**5388**	T	22-2	P	A	(XXX)

Military

MS Number	Service Class	Shell Size	Finish	Insert Arrg	Contact Style (P or S)	Alternate Position
MS27661	**T**	14	A	18	P	A

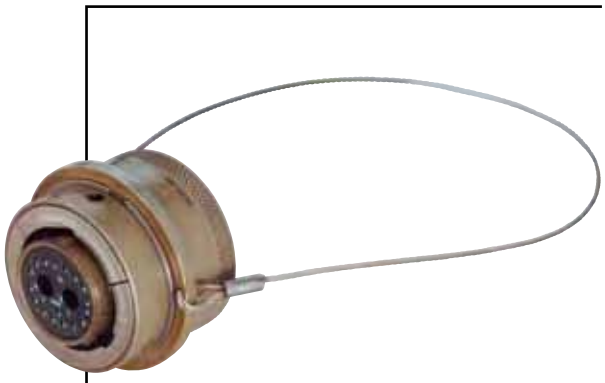

LJT Breakaway Fail Safe

In addition to standard Breakaway connectors, Amphenol also manufactures custom breakaway connectors including those with:

- Increased pull-force capability
- Custom lanyard lengths and backshells
- Low force separation capabilities
- Low insertion/separation force contacts
- Non-cadmium finishes
- Custom JT Series Breakaway designs have been developed for special applications; however the LJT Series is recommended over the JT Series for the quick-disconnect breakaway style.

LJT Fail Safe 88-5388/91-5388 (MS27661)

Lanyard Release Plug

* To complete order number see page 79.

Shell Size	A Dia. Max.	B Max.	D Max. Accessory Dia.	L Max.	V Thread UNEF Class 2A (Plated)
11	1.393	1.797	.740	1.703	.5625-24
13	1.558	1.969	.926	1.703	.6875-24
15	1.669	2.078	1.051	1.703	.8125-20
17	1.797	2.203	1.176	1.703	.9375-20
19	1.926	2.323	1.300	1.703	1.0625-18
21	2.054	2.469	1.426	1.703	1.1875-18
23	2.183	2.594	1.551	1.703	1.3125-18
25	2.293	2.703	1.676	1.766	1.4375-18

All dimensions for reference only.

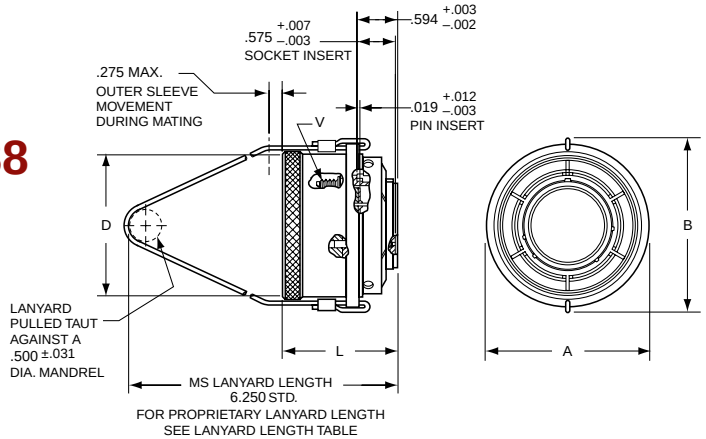

Amphenol
SJT Series

TABLE OF CONTENTS

Amphenol SJT Connectors - Scoop-Proof Design of LJT Series & Standard Mounting Dimensions of JT Series - Meet European Specification Applications

- Table of Contents 81
- Features, Specifications 82
- How to Order, Alternate Rotations 83
- Insert Availability and Identification 84

SJT Shell Styles:

- Crimp Wall Mounting Receptacle SJT00RT, Crimp Wall Mounting Receptacle for Back Panel Mounting SJTP00RT 85
- Crimp Box Mounting Receptacle for Back Panel Mounting SJTP02RE, Crimp Jam Nut Receptacle SJT07RT 86
- Crimp Straight Plug SJT06RT, Crimp Straight Plug with Grounding Fingers SJTG06RT 87
- Hermetic Solder Mounting Receptacle SJTIY, Hermetic Jam Nut Receptacle SJT07Y 88
- Accessories, Contacts, and Tools see pages 89-108

SJT Typical Markets:

- Military & Commercial Aviation (older designs)
- Applications Complaint with European Specifications: PAN6433-2, LN29729, VG96912
- Military Vehicles

Amphenol Aerospace

Amphenol® SJT connectors combine unique design features of the scoop-proof LJT series within standard mounting dimensions of JT types. Available in a wide range of shell sizes, finishes, insert arrangements and accessories, the SJT features:

- **100% scoop-proof design** – basic MIL-DTL-38999 Series I* lengths
- **Standard mounting dimensions** – MIL-DTL-38999, Series III** dimensions
- **Compliance with European Specifications** – PAN6433-2, LN29729, VG96912

Components

Standard connectors use aluminum shells. Standard plating on shell components is cadmium over nickel with many optional finishes available. A dependable 5-key/keyway shell polarization with bayonet-lock coupling is incorporated to aid and assure positive mating.

The insert material is a high-temperature, rigid dielectric polymer providing excellent electrical characteristics. A fluorinated silicone interfacial seal is featured on the mating face of the pin inserts, assuring complete electrical isolation of the pins when connector halves are mated. Contrasting letter or number designations are used on the insert faces. A main joint gasket is installed in the receptacles for moisture sealing between connector halves.

Serrated and threaded shells, with a moisture sealing pilot for back shells, accept a wide range of accessories.

Hermetic seal receptacles are available in carbon steel or stainless steel shells.

Contacts

Rear insertable/rear release crimp contacts are standard in SJT connectors. Power contacts are available in sizes 10, 12, 16, 20, 22M and 22D. All socket contacts are probe proof. Standard contact plating is 50 mμ minimum gold. Coaxial contacts are available in sizes 8, 12 and 16 to accommodate a wide range of coaxial cables; see Coaxial contact information in the High Speed Contact section of this catalog. Size 8 and 12 Twinax contacts are also available; see Concentric Twinax contact information in the High Speed Contact section of this catalog.

Optional Features

Special adaptations of the SJT are available for hermetic and high temperature applications. The SJTS high temperature connector is rated at 392°F. SJT hermetic receptacles are described on page 88.

Specials

Special types are available, such as connectors less contacts and circular rack and panel connectors with solderless wrap contacts. A complete listing of connector types, shell styles and service classes appears on page 83, How to Order. For further information on special application requirements, contact an Amphenol Sales Person or visit www.amphenol-aerospace.com/support to find a sales person in your area.

*MIL-DTL-38999 Series I supersedes MIL-C-38999 Series I.
**MIL-DTL-38999 Series III supersedes MIL-C-38999 Series III.

CONTACT RATING

Contact Size	Test Current		Maximum Millivolt Drop Crimp*	Maximum Millivolt Drop Hermetic
	Standard	Hermetic		
22M	3	2	45	60
22D	5	3	73	85
22	5	3	73	85
20	7.5	5	55	60
16	13	10	49	85
12	23	17	42	85
10 Power	33	NA	33	NA

* When using silver plated wire

Contact Size	Crimp Well Data	
	Well Diameter	Min. Well Depth
22M	.028 ±.001	.141
22D	.0345 ±.0010	.141
22	.0365 ±.0010	.141
20	.047 ±.001	.209
16	.067 ±.001	.209
12	.100 ±.002	.209
10 (Power)	.137 ±.002	.355

SERVICE RATING**

Service Rating	Suggested Operating Voltage (Sea Level)		Test Voltage (Sea Level)	Test Voltage 50,000 Ft.	Test Voltage 70,000 Ft.	Test Voltage 110,000 Ft.
	AC (RMS)	DC				
M	400	550	1300 VRMS	550 VRMS	350 VRMS	200 VRMS
N	300	450	1000 VRMS	400 VRMS	260 VRMS	200 VRMS
I	600	850	1800 VRMS	600 VRMS	400 VRMS	200 VRMS
II	900	1250	2300 VRMS	800 VRMS	500 VRMS	200 VRMS

** Please note that the establishment of electrical safety factors is left entirely in the designer's hands, since he is in the best possible position to know what peak voltage, switching surges, transients, etc., can be expected in a particular circuit.

Amphenol Aerospace

Easy Steps to build a part number... SJT

1.	2.	3.	4.	5.	6.	7.
Connector Type SJT	Shell Style	Service Class	Shell Size-Insert Arrangement.	Contact Type	Alternate Keying Position	Finish Variations Suffix
SJT	00	RT	18-66	P	A	(XXX)

Step 1. Select a Connector Type

	Designates
SJT	Standard scoop-proof Junior Tri-Lock Connector
SJTS	High Temperature Connector
SJTG	Plug with Grounding Fingers
SJTP	Back Panel Mounted

Step 2. Select a Shell Style

	Designates
00	Wall Mount Receptacle
06	Straight Plug
07	Jam Nut Receptacle
I	Solder Mount Receptacle – Hermetic

Step 3. Select a Service Class

	Designates
Y	For hermetic applications. . . Fused compression glass sealed inserts. Leakage rate less than 1.0 x 10^{-6} cc/sec. at 15 psi differential; with interfacial seal.
RT	For environmental applications – supplied without rear accessories. Design provides serrations on rear threads of shells with moisture sealing pilot for back shells.

For additional information defining complete description of service class, consult Amphenol, Sidney, NY.

Step 4. Select a Shell Size & Insert Arrangement from chart on pg. 84. To view Insert Arrangement illustrations see pgs. 8-12.

Shell Size & Insert Arrangements are together in one chart. First number represents Shell Size, second number is the Insert Arrangement. Only selected illustrations are available for SJT on pages 8-12. Please refer to chart on page 84 for select Insert Arrangements.

Step 5. Select a Contact Type

	Designates
P	Pin Contacts
S	Socket Contacts

Step 6. Select an Alternate Keying Position

A plug with a given rotation letter will mate with a receptacle with the same rotation letter. The AB angle for a given connector is the same whether it contains pins or sockets. Inserts are not rotated in conjunction with the master key/keyway.
AB angles shown are viewed from the front face of the connector. A receptacle is shown below. The angles for the plug are exactly the same, except the direction of rotation is opposite of that shown for the receptacle.

Key/Keyway Rotation
AB ANGLE OF ROTATION (Degrees)

Shell Size	Normal	A	B	C	D
8	95				
10	95	81	67	123	109
12	95	75	63	127	115
14	95	74	61	129	116
16	95	77	65	125	113
18	95	77	65	125	113
20	95	77	65	125	113
22	95	80	69	121	110
24	95	80	69	121	110

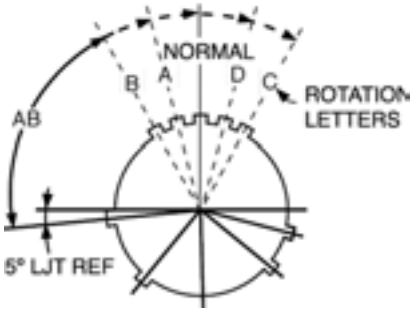

RELATIVE POSSIBLE POSITION OF ROTATED MASTER KEYWAY (front face of receptacle shown)

Step 7. Select a Finish Variation Suffix

FINISH DATA

Aluminum Shell Components Non-Hermetic		
Finish	Suffix	Indicated Finish Standard for SJT Types
Bright Cadmium Plated Nickel Base		SJT/SJTG
Anodic Coating (Alumilite)	(005)	
Chromate Treated (Iridite 14-2)	(011)	
Olive Drab Cadmium Plate Nickel Base	(014)	
Electroless Nickel Coating	(023)	
Hermetic Connectors		
Carbon Steel Shell, Tin Plated Shell and Contacts		SJT( )Y
Stainless Steel Shell, Gold Plated Contacts	Consult Amphenol	

					Contact Size									
Shell Size	Crimp	Hermetics* Class Y	Service Rating	Total Contacts	22D	22M	22	20	16	12	12 (Coax)	10 (Power)	8 (Coax)	8††† (Twinax)
8-6	X		M	6		6								
8-35	X		M	6	6									
8-44	X		M	4			4							
8-98	X		I	3				3						
10-2	X		I	2					2					
10-4	✦		I	4				4						
10-5	X		I	5				5						
10-13	X		M	13		13								
10-35	X		M	13	13									
10-98	X		I	6				6						
12-4	X		I	4					4					
12-8	X		I	8				8						
12-22	X		M	22		22								
12-35	X		M	22	22									
12-98	X	X	I	10				10						
14-5	X		II	5					5					
14-15	X		I	15				14	1					
14-18	X		I	18				18						
14-19	X	X	I	19				19						
14-35	X	X	M	37	37									
14-37	X	X	M	37		37								
14-97	X		I	12				8	4					
16-2	✦		M	39	38									1**
16-6	X		I	6						6				
16-8	X		II	8					8					
16-13	✦		I	13					13					
16-26	X		I	26				26						
16-35	X		M	55	55									
16-42	X		M	42			42							
16-55	X		M	55		55								
16-99	X	X	I	23				21	2					
18-11	X		II	11					11					
18-32	X		I	32				32						
18-35	X	X	M	66	66									
18-66	X	X	M	66		66								
20-1	X	X	M	79		79								
20-2	X		M	65			65							
20-11	X		I	11						11				
20-16	X		II	16					16					
20-35	X	X	M	79	79									
20-39	X		I	39				37	2					
20-41	X		I	41				41						
20-75	✦		M	4									4††	
20-79	✦		II	19	17								2†	
22-1	X	X	M	100		100								
22-2	X		M	85			85							
22-21	X		II	21					21					
22-35	X	X	M	100	100									
22-53	X		I	53				53						
24-1	X		M	128		128								
24-2	X		M	100			100							
24-4	X		I	56				48	8					
24-7	X		M	99	97									2**
24-11	✦		N	11				2				9		
24-19	X		I	19						19				
24-20	✦		N	30				10	13***		4			3
24-24	X		I	24					12	12				
24-29	X		I	29					29					
24-35	X		M	128	128									
24-37	X		I	37					37					
24-43	✦		I	43				23	20					
24-46	✦		I	46				40	4				2††	
24-61	X		I	61				61						

✦ Not tooled for 02-RE
* Pin inserts only (contact Amphenol for socket availability).
** twinax contacts for MIL-C-17/176-00002 cable.
*** Two size 16 contacts dedicated to fiber optics. Consult Amphenol or Fiber Optic Section for more information.

† Must be ordered separately
†† Coax Contacts for RG180 or RG195 cable.
††† Size 8 Coax and Twinax are interchangeable. For availability of size 12 twinax contacts, consult Amphenol, Sidney, NY

SJT00RT – Crimp
Wall Mounting Receptacle

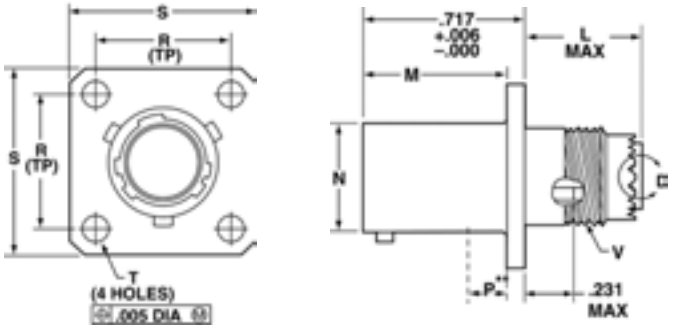

PART # *To complete, see how to order pages 83-84.

Connector Type	Shell Style	Service Class	Shell Size & Insert Arrg	Contact Type	Alternate Positions	Special Variations
SJT	00	RT	X-X	X	X	(XXX)

Note: Standard wall mount may be back panel mounted where panel thickness does not exceed these dimensions. For thicker panel applications, SJTP00RT should be used.

Shell Size	L Max	M +.000 –.005	R (TP)	S ±.016	T ±.005	V Thread Modified Class 2A UNEF (Plated)	V Thread Modified Major Dia.		N +.001 –.005	P** Max
8	.500	.632	.594	.812	.120	.4375-28	.421 –	.417	.473	.117
10	.500	.632	.719	.938	.120	.5625-24	.542 –	.538	.590	.117
12	.500	.632	.812	1.031	.120	.6875-24	.667 –	.663	.750	.117
14	.500	.632	.906	1.125	.120	.8125-20	.791 –	.787	.875	.117
16	.500	.632	.969	1.219	.120	.9375-20	.916 –	.912	1.000	.117
18	.500	.632	1.062	1.312	.120	1.0625-18	1.034 –	1.030	1.125	.117
20	.500	.602	1.156	1.438	.120	1.1875-18	1.158 –	1.154	1.250	.087
22	.500	.602	1.250	1.562	.120	1.3125-18	1.283 –	1.279	1.375	.087
24	.550	.602	1.375	1.688	.147	1.4375-18	1.408 –	1.404	1.500	.055

SJT00RT

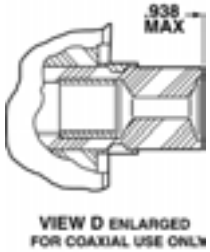

SJTP00RT – Crimp
Wall Mounting Receptacle
(Back Panel Mounting)

PART # To complete, see how to order pages 83-84.

Connector Type	Shell Style	Service Class	Shell Size & Insert Arrg	Contact Type	Alternate Positions	Special Variations
SJTP	00	RT	X-X	X	X	(XXX)

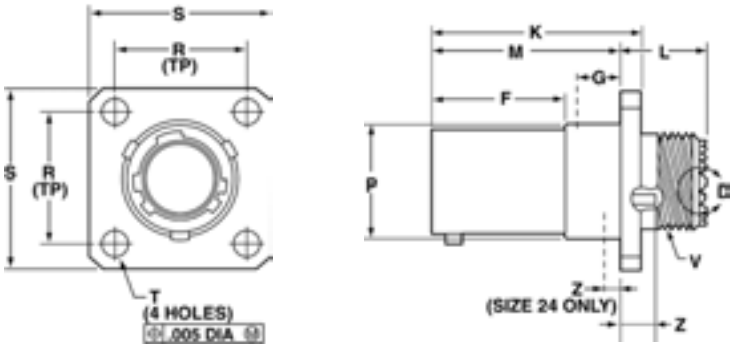

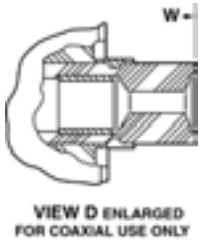

SJTP00RT

Shell Size	F +.000 –.005	K +.006 –.000	L Max.	M +.000 –.005	R (TP)	S +.011 –.010	T ±.005	Z ±.031	V Thread Class 2A (Plated) UNEF	P Dia. +.001 –.005	W Max.	G Max.
8	.609	.945	.539	.860	.594	.812	.120	.062	.4375-28	.516	.812	.345
10	.609	.945	.539	.860	.719	.938	.120	.062	.5625-24	.633	.812	.345
12	.609	.945	.539	.860	.812	1.031	.120	.062	.6875-24	.802	.812	.345
14	.609	.945	.539	.860	.906	1.125	.120	.062	.8125-20	.927	.812	.345
16	.609	.945	.539	.860	.969	1.219	.120	.062	.9375-20	1.052	.812	.345
18	.609	.945	.539	.860	1.062	1.312	.120	.062	1.0625-18	1.177	.812	.345
20	.609	.945	.539	.860	1.156	1.438	.120	.062	1.1875-18	1.302	.812	.345
22	.609	.945	.539	.860	1.250	1.562	.120	.062	1.3125-18	1.427	.812	.345
24	.750	1.085	.493	1.000	1.375	1.688	.147	.078	1.4375-18	1.552	.781	.452

All dimensions for reference only.

SJTP02RE – Crimp
Box Mounting Receptacle (Back Panel Mounting)

PART # To complete, see how to order pages 83-84.

Connector Type	Shell Style	Service Class	Shell Size & Insert Arrg	Contact Type	Alternate Positions	Special Variations
SJTP	02	RE	X-X	X	X	(XXX)

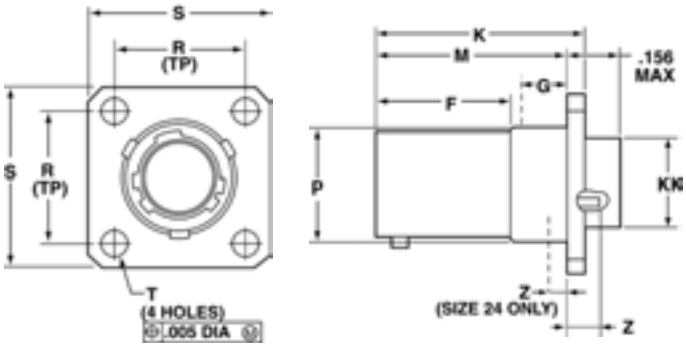

SJTP02RE

Shell Size	F +.000 –.005	K +.006 –.000	M +.000 –.005	R (TP)	S +.011 –.010	T ±.005	Z ±.031	P Dia. +.001 –.005	KK Dia. +.005 –.002	G Max.
8	.609	.945	.860	.594	.812	.120	.062	.516	.417	.345
10	.609	.945	.860	.719	.938	.120	.062	.633	.538	.345
12	.609	.945	.860	.812	1.031	.120	.062	.802	.663	.345
14	.609	.945	.860	.906	1.125	.120	.062	.927	.787	.345
16	.609	.945	.860	.969	1.219	.120	.062	1.052	.912	.345
18	.609	.945	.860	1.062	1.312	.120	.062	1.177	1.030	.345
20	.609	.945	.860	1.156	1.438	.120	.062	1.302	1.154	.345
22	.609	.945	.860	1.250	1.562	.120	.062	1.427	1.279	.345
24	.750	1.085	1.000	1.375	1.688	.147	.078	1.552	1.404	.452

SJT07RT – Crimp
Jam Nut Receptacle

PART # To complete, see how to order pages 83-84.

Connector Type	Shell Style	Service Class	Shell Size & Insert Arrg	Contact Type	Alternate Positions	Special Variations
SJT	07	RT	X-X	X	X	(XXX)

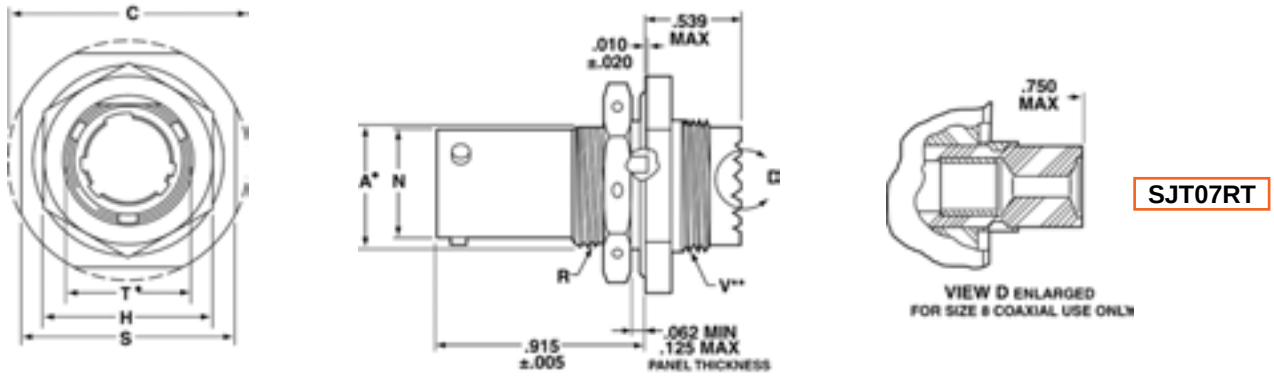

SJT07RT

• "D" shaped panel cut-out dimensions
** Oversize threads. Check accessory threads before ordering

Shell Size	A• +.000 –.010	H Hex +.017 –.016	S ±.016	V Thread Class 2A UNEF (Plated)	R Thread Class 2A UNEF (Plated)	N +.001 –.005	C Max.	T• +.010 –.000
8	.542	.750	.938	.5625-24	.5625-24	.473	1.078	.572
10	.669	.875	1.062	.6875-24	.6875-24	.590	1.203	.697
12	.830	1.062	1.250	.8125-20	.8750-20	.750	1.391	.884
14	.955	1.188	1.375	.9375-20	1.0000-20	.875	1.515	1.007
16	1.084	1.312	1.500	1.0625-18	1.1250-18	1.000	1.641	1.134
18	1.208	1.438	1.625	1.1875-18	1.2500-18	1.125	1.766	1.259
20	1.333	1.562	1.812	1.3125-18	1.3750-18	1.250	1.953	1.384
22	1.459	1.688	1.938	1.4375-18	1.5000-18	1.375	2.078	1.507
24	1.580	1.812	2.062	1.4375-18	1.6250-18	1.500	2.203	1.634

All dimensions for reference only.

PART # To complete, see how to order pages 83-84.

Connector Type	Shell Style	Service Class	Shell Size & Insert Arrg	Contact Type	Alternate Positions	Special Variations
SJT	06	RT	X-X	X	X	(XXX)
SJTG	06	RT	X-X	X	X	(XXX)

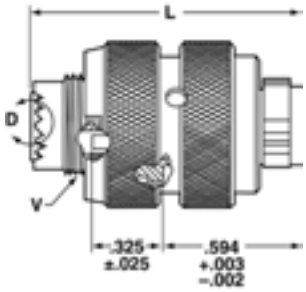

SJT06RT

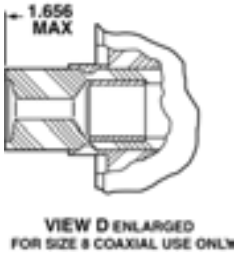

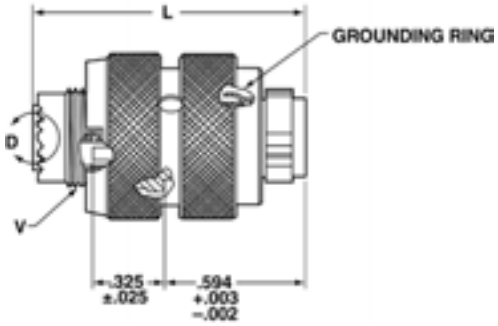

SJTG06RT

Shell Size	L Max	Q Dia. Max.	V Thread Class 2A UNEF (Plated)	V Thread Modified Major Dia.	
8	1.219	.734	.4375-28	.421 –	.417
10	1.219	.844	.5625-24	.542 –	.538
12	1.219	1.016	.6875-24	.667 –	.663
14	1.219	1.141	.8125-20	.791 –	.787
16	1.219	1.265	.9375-20	.916 –	.912
18	1.219	1.391	1.0625-18	1.034 –	1.030
20	1.219	1.500	1.1875-18	1.158 –	1.154
22	1.219	1.625	1.3125-18	1.283 –	1.279
24	1.258	1.750	1.4375-18	1.408 –	1.404

All dimensions for reference only.

SJTIY – Hermetic
Solder Mounting Receptacle

PART # To complete, see how to order pages 83-84.

Connector Type	Shell Style	Service Class	Shell Size & Insert Arrg	Contact Type	Alternate Positions	Special Variations
SJT	I	Y	X-X	X	X	(XXX)

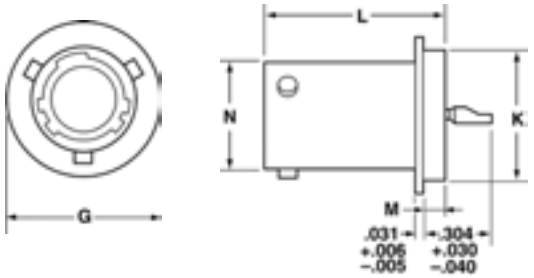

SJTIY

Shell Size	L +.011 –.000	M +.006 –.005	G Dia. +.011 –.010	K Dia. +.001 –.005	N +.001 –.005
8	.789	.125	.687	.562	.473
10	.789	.125	.797	.672	.590
12	.789	.125	.906	.781	.750
14	.789	.125	1.031	.906	.875
16	.789	.125	1.156	1.031	1.000
18	.789	.125	1.281	1.156	1.125
20	.789	.125	1.375	1.250	1.250
22	.821	.156	1.500	1.375	1.375
24	.821	.156	1.625	1.500	1.500

SJT07Y – Hermetic
Jam Nut Receptacle

PART # To complete, see how to order pages 83-84.

Connector Type	Shell Style	Service Class	Shell Size & Insert Arrg	Contact Type	Alternate Positions	Special Variations
SJT	07	Y	X-X	X	X	(XXX)

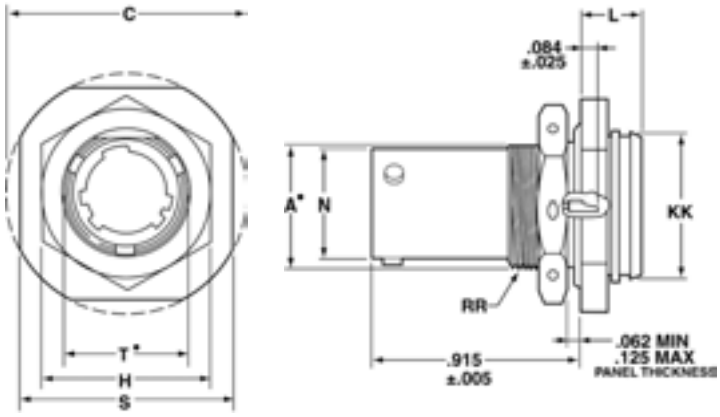

SJT07Y

- "D" shaped panel cut-out dimensions

Shell Size	N +.001 –.005	C Max.	A• +.000 –.010	L Max.	H Hex +.017 –.016	S ±.016	KK +.011 –.000	RR Thread Class 2A UNEF (Plated)	T• +.010 –.000
8	.473	1.078	.542	.297	.750	.938	.642	.5625-24	.572
10	.590	1.203	.669	.297	.875	1.062	.766	.6875-24	.697
12	.750	1.391	.830	.297	1.062	1.250	.892	.8750-20	.884
14	.875	1.515	.955	.297	1.188	1.375	1.018	1.0000-20	1.007
16	1.000	1.641	1.084	.297	1.312	1.500	1.142	1.1250-18	1.134
18	1.125	1.766	1.208	.328	1.438	1.625	1.268	1.2500-18	1.259
20	1.250	1.953	1.333	.328	1.562	1.812	1.392	1.3750-18	1.384
22	1.375	2.078	1.459	.328	1.688	1.938	1.518	1.5000-18	1.507
24	1.500	2.203	1.580	.328	1.812	2.062	1.642	1.6250-18	1.634

All dimensions for reference only.

Series III TV | Series II JT | Series I LJT | SJT

Amphenol Aerospace is the leader in Interconnect solutions and provides companies with a product portfolio of connectors, accessories, cable assemblies and system integration for most applications across various industries. With connectors conforming to Military, Aerospace and Industrial standards in US, Europe and Asia, Amphenol assumes the leadership in meeting the interconnect needs of these market segments.

MIL-DTL-38999 Series III TV Tri-Start

- Backshells Accessories
- Dummy Contacts
- Wire Combs
- Receptacle Protection Cap
- Plug Protection Cap
- Dummy Receptacle
- Cable Clamps
- Contacts-Printed Circuit Board Wire Wrap
- Header Assembly

Application Tools

- Crimp Tools
- Insertion Tools
- Removal Tools

MIL-DTL-38999 Series II JT

- Receptacle Protection Cap
- Plug Protection Cap
- Strain Relief (Solder/Crimp Type)
- Contacts-Printed Circuit Board Wire Wrap
- Header Assembly

Application Tools

- Crimp Tools
- Insertion Tools
- Removal Tools

MIL-DTL-38999 Series I LJT

- Receptacle Protection Cap
- Plug Protection Cap
- Dummy Receptacle
- Cable Clamps
- Contacts-Printed Circuit Board Wire Wrap
- Header Assembly

Application Tools

- Crimp Tools
- Insertion Tools
- Removal Tools

SJT

- Receptacle Protection Cap
- Plug Protection Cap
- Dummy Receptacle
- Cable Clamps

Application Tools

- Crimp Tools
- Insertion Tools
- Removal Tools

Series III TV

Amphenol offers a full range of accessories that are designed to enhance the performance of Amphenol Breakaway connectors.

Low Profile Backshells in shell size 25 with the following features:

- Olive drab cadmium finish
- 90 degree termination
- Low profile design with three heights ranging from 1.010 to 1.660
- Rear access covers to help ease harness assembly and repairability
- Amphenol part numbers: 10-640000-XXX

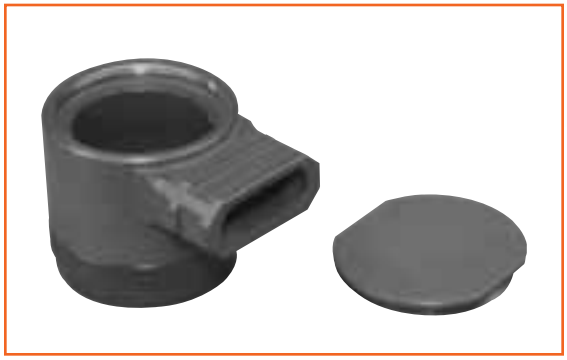

Backshells are offered for use with Breakaway Fail Safe Connectors in three heights.

Dummy Contacts

- Available in size 12 and size 8
- Provide a cost effective alternative for sealing unused contact cavities
- Size 8 part number: T3-4008-59P
- Size 12 part number: T3-4012-59P

Wire Combs

- Available for the 25-20 insert pattern to help to stabilize and prevent contact side loading
- Amphenol part number: 21-33626-XXX

For information on how to order these accessory products for Breakaway Fail Safe connectors consult Amphenol Aerospace.

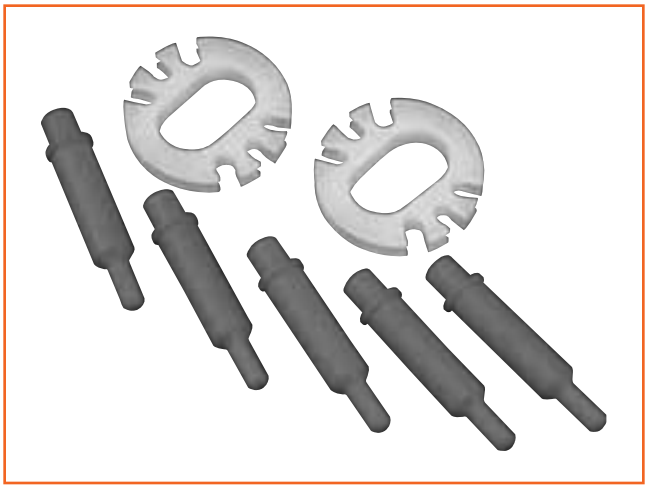

Accessory products for Breakaway Connectors: Dummy Contacts and Wire Combs

Amphenol Aerospace

Series III TV

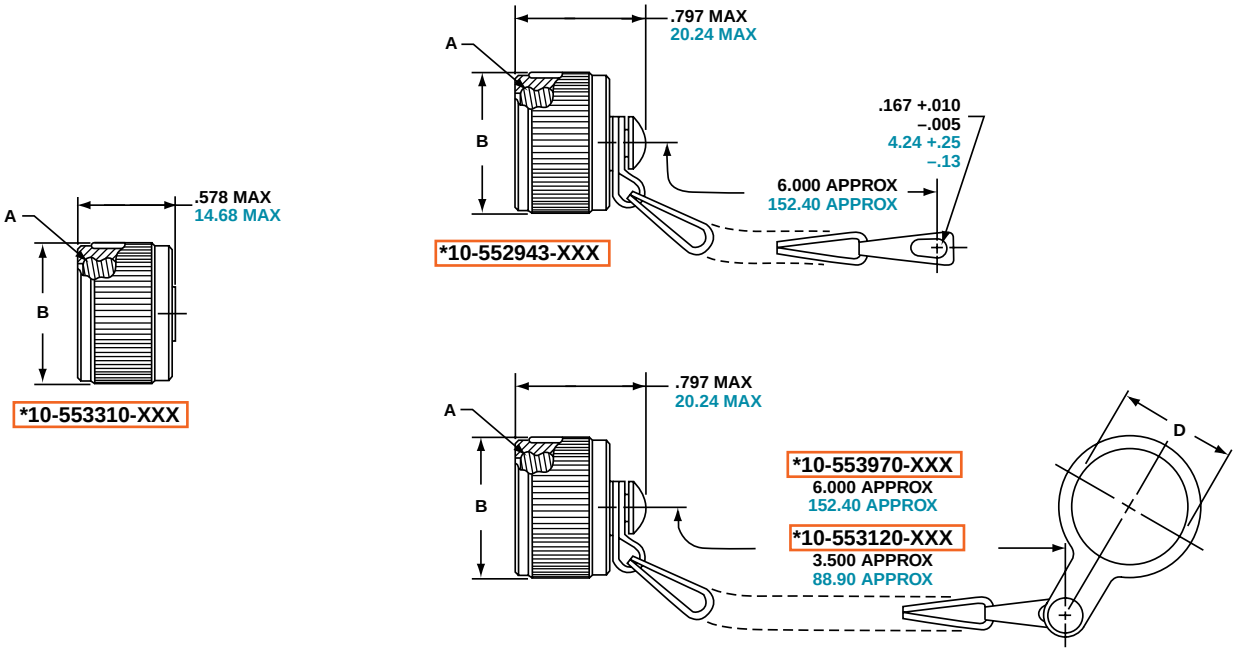

* To complete order number, add shell size and suffix number. For example, shell size 11 with olive drab cadmium nickel base, 10-552943-119

Inches

Shell Size	A Thread Class 2B 0.1P-0.3L-TS	B Dia. Max.	D Dia. +.010 –.000
9	.6250	.875	.703
11	.7500	1.000	.844
13	.8750	1.125	1.016
15	1.0000	1.250	1.141
17	1.1875	1.438	1.266
19	1.2500	1.500	1.391
21	1.3750	1.625	1.516
23	1.5000	1.750	1.641
25	1.6250	1.875	1.766

Finish	10-No Suffix
Olive Drab, Cadmium, Nickel base	-XX9
Electroless Nickel	-XXG

Consult Amphenol Aerospace for availability of stainless steel protection caps.

All dimensions for reference only.
For MS protection caps, see page 95.

Millimeters

Shell Size	MS Shell Size Code	B Dia. Max.	D Dia. +.25 –.00
9	A	22.23	17.86
11	B	25.40	21.44
13	C	28.58	25.81
15	D	31.75	28.98
17	E	36.53	32.16
19	F	38.10	35.33
21	G	41.28	38.51
23	H	44.45	41.68
25	J	47.63	44.86

Series III TV

***10-552944-XXX**

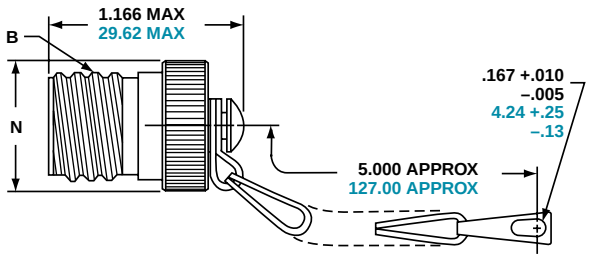

***10-553998-XXX**

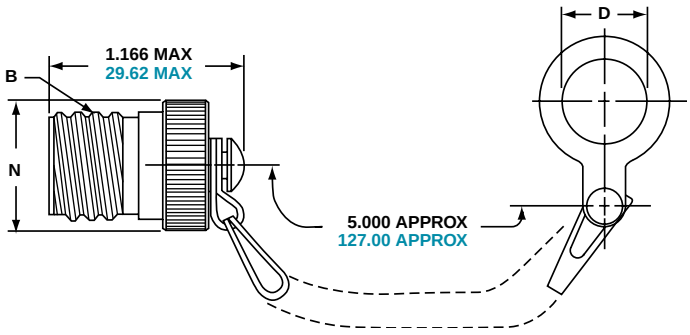

* To complete order number, add shell size and suffix number. For example, shell size 11 with olive drab cadmium nickel base, 10-552944-119

Inches

Shell Size	A Thread Class 2B 0.1P-0.3L-TS	D Dia. +.010 –.000	N Dia. Max.
9	.6250	.516	.895
11	.7500	.641	1.000
13	.8750	.766	1.171
15	1.0000	.891	1.299
17	1.1875	1.016	1.436
19	1.2500	1.141	1.543
21	1.3750	1.266	1.670
23	1.5000	1.343	1.787
25	1.6250	1.516	1.914

Finish	10-No Suffix
Olive Drab, Cadmium, Nickel base	-XX9
Electroless Nickel	-XXG

Consult Amphenol Aerospace for availability of stainless steel protection caps.

All dimensions for reference only.
For MS protection caps, see page 95.

Millimeters

Shell Size	MS Shell Size Code	D Dia. +.25 –.00	N Dia. Max.
9	A	13.11	22.73
11	B	16.28	25.40
13	C	19.46	29.74
15	D	22.63	32.99
17	E	25.81	36.47
19	F	28.98	39.19
21	G	32.16	42.42
23	H	34.11	45.39
25	J	38.51	48.62

Amphenol Aerospace

Series III TV

Part number reference.
See note below to complete.

* 10-553974-XXX

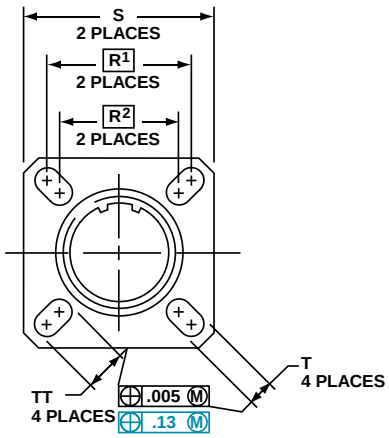

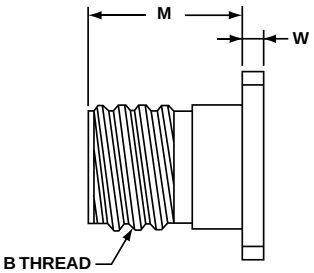

* To complete order number, add shell size and suffix number. For example, shell size 11 with olive drab cadmium nickel base, 10-553974-119

Inches

Shell Size	MS Shell Size Coded	B Thread 0.1P-0.3L-TS (Plated)	M +.020 –.000	R1	R2	S ±.010	T ±.008 –.006	W ±.010	TT ±.008 –.006
9	A	.6250	.822	.719	.594	.938	.128	.098	.216
11	B	.7500	.822	.812	.719	1.031	.128	.098	.194
13	C	.8750	.822	.906	.812	1.125	.128	.098	.194
15	D	1.0000	.822	.969	.906	1.219	.128	.098	.173
17	E	1.1875	.822	1.062	.969	1.312	.128	.098	.194
19	F	1.2500	.822	1.156	1.062	1.438	.128	.098	.194
21	G	1.3750	.791	1.250	1.156	1.562	.128	.125	.194
23	H	1.5000	.791	1.375	1.250	1.688	.154	.125	.242
25	J	1.6250	.791	1.500	1.375	1.812	.154	.125	.242

Finish	10-No Suffix
Olive Drab, Cadmium, Nickel base	-XX9
Electroless Nickel	-XXG

Millimeters

Shell Size	MS Shell Size Coded	M +.51 –.00	R1	R2	S ±.25	T +.20 –.15	W ±.25	TT +.20 –.15
9	A	20.88	18.26	15.09	23.83	3.25	2.49	5.49
11	B	20.88	20.62	18.26	26.19	3.25	2.49	4.93
13	C	20.88	23.01	20.62	28.58	3.25	2.49	4.93
15	D	20.88	24.61	23.01	30.96	3.25	2.49	4.93
17	E	20.88	26.97	24.61	33.32	3.25	2.49	4.93
19	F	20.88	29.36	26.97	36.53	3.25	2.49	4.93
21	G	20.09	31.75	29.36	39.67	3.25	3.18	4.93
23	H	20.09	34.93	31.75	42.88	3.91	3.18	6.15
25	J	20.09	38.10	34.93	46.02	3.91	3.18	6.15

All dimensions for reference only

Designates true position dimensioning

Series III TV

Straight Style
***10-552681-XXX** metal coupling

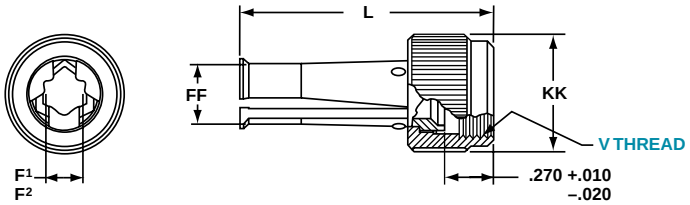

90 Degree Elbow Style
***10-552682-XXX** metal coupling

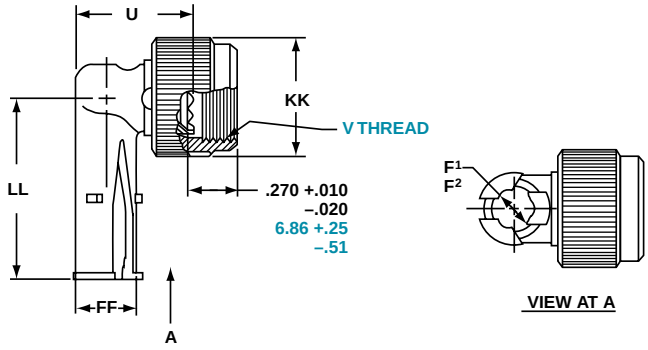

* To complete order number, see suffix chart below. Examples: Clamp with metal coupling nut for shell size 11 with olive drab cadmium nickel base, 10-552681-119.

Inches

Shell Size	MS Shell Size Code	F¹ Min. Dia. Cable	F² Max. Dia. Cable	L Max.	U Max.	FF Dia. Max.	KK Dia. Max.	LL Max.
9	A	.094	.203	1.431	.656	.347	.629	1.015
11	B	.141	.250	1.431	.688	.394	.756	1.062
13	C	.172	.323	1.431	.750	.467	.883	1.125
15	D	.203	.422	1.431	.859	.566	1.011	1.328
17	E	.234	.500	1.431	.937	.644	1.138	1.392
19	F	.265	.562	1.431	1.000	.706	1.265	1.453
21	G	.297	.625	1.492	1.062	.769	1.393	1.609
23	H	.328	.703	1.492	1.141	.847	1.488	1.656
25	J	.359	.765	1.492	1.203	.909	1.616	1.719

Finish	10-No Suffix
Olive Drab, Cadmium Nickel Base	-XX9
Electroless Nickel	-XXG

Millimeters

Shell Size	MS Shell Size Code	F¹ Min. Dia. Cable	F² Max. Dia. Cable	L Max.	U Max.	V Thread Metric	FF Dia. Max.	KK Dia. Max.	LL Max.
9	A	2.39	5.16	36.35	16.66	M12X1-6H	8.81	15.98	25.78
11	B	3.58	6.35	36.35	17.48	M15X1-6H	10.01	19.20	26.97
13	C	4.37	8.20	36.35	19.05	M18X1-6H	11.86	22.43	28.58
15	D	5.16	10.72	36.35	21.82	M22X1-6H	14.38	25.68	33.73
17	E	5.94	12.70	36.35	23.80	M25X1-6H	16.36	28.91	35.36
19	F	6.73	14.27	36.35	25.40	M28X1-6H	17.93	32.13	36.91
21	G	7.54	15.88	37.90	26.97	M31X1-6H	19.53	35.38	40.87
23	H	8.83	17.86	37.90	28.98	M34X1-6H	21.51	37.80	42.06
25	J	9.12	19.43	37.90	30.56	M37X1-6H	23.09	41.05	43.66

All dimensions for reference only.

Amphenol Aerospace

Series III TV

STANDARD 500 CYCLE CONTACTS FOR TV AND CTV, P & S

Contact Size	TV/CTV Pins		TV/CTV Sockets	
	Military No.	Supersedes	Military No.	Supersedes
8 (Coax)*	M39029/60-367	MS27536	M39029/59-366	MS27535
8 (Power)	Contact Factory	NA	NA	NA
8 (Twinax)**	M39029/90-529	N/A	M39029/91-530	N/A
10 (Power)	M39029/58-528	N/A	M39029/56-527	N/A
12	M39029/58-365	MS27493-12	M39029/56-353	MS27490-12
16	M39029/58-364	MS27493-16	M39029/56-352	MS27490-16
20	M39029/58-363	MS27493-20	M39029/56-351	MS27490-20
22D	M39029/58-360	MS27493-22D	M39029/56-348	MS27490-22D
4	N/A	N/A	N/A	N/A
0	N/A	N/A	N/A	N/A

Above part numbers include standard 500 cycle finish designation - gold plating over suitable underplate in accordance with SAE AS39029. For other finish variations, consult Amphenol.

*For use with RG180B/U and RG195A/U cable. For other size 8 coax or optional sizes 12 and 16 coax contacts available for use in MIL-DTL-38999 Series III connectors, see the High Speed Contact section of this catalog consult Amphenol, Sidney, NY

** For use with M17/M176-00002 cable.
For other contact options available for use in Tri-Start connectors, (wire wrap, thermocouple, fiber optic) consult Amphenol.

1500 CYCLE CONTACTS FOR CTV, CLASSES H & J

Contact Size	CTV Pins			CTV Sockets		
	Commercial No.	Military No.	Supersedes	Commercial No.	Military No.	Supersedes
12	10-597072-2X	M39029/107-623	–	10-597073-2X	M39029/106-617	–
16	10-597068-2X	M39029/107-622	–	10-597069-2X	M39029/106-616	–
20	10-597064-2X	M39029/107-621	–	10-597065-2X	M39029/106-615	–
22D	10-597058-3X	M39029/107-620	–	10-597061-2X	M39029/106-614	–

PLASTIC PROTECTION CAPS

Shell Size	Plug	Receptacle
9	10-70506-14	10-70500-10
11	10-70506-16	10-70500-12
13	10-70500-18	10-70500-14
15	10-70500-20	10-70500-16
17	10-70500-22	10-70500-19
19	10-70500-24	10-70500-20
21	10-70524-1	10-70500-22
23	10-70506-28	10-70500-24
25	10-70500-28	10-70524-1

MS METAL PROTECTION CAPS

Shell Size	MS Shell Size Code	MS Plug Protection Cap	MS Receptacle Protection Cap
9	A	D38999/32W9X*	D38999/33W9X*
11	B	D38999/32W11X*	D38999/33W11X*
13	C	D38999/32W13X*	D38999/33W13X*
15	D	D38999/32W15X*	D38999/33W15X*
17	E	D38999/32W17X*	D38999/33W17X*
19	F	D38999/32W19X*	D38999/33W19X*
21	G	D38999/32W21X*	D38999/33W21X*
23	H	D38999/32W23X*	D38999/33W23X*
25	J	D38999/32W25X*	D38999/33W25X*

* To complete order number, replace X with applicable letter as follows:
R - designates eyelet type
N - designates washer type
MS metal protection caps are supplied with service class W which designates corrosion resistant olive drab cadmium plate aluminum.
Consult Amphenol, Sidney, NY for more detailed information on ordering MS Metal protection caps.

SEALING PLUGS

Contact Size	Commercial No.	Military No.
8 (Coax)	10-482099-8	N/A
8 (Twinax)	T3-4008-59P	N/A
8 (Power)	10-405996-83	MS27488-8-3
10 (Power)	T3-4010-59P	M85049/81-10
12	10-405996-122	MS27488-12-2
16	10-405996-162	MS27488-16-2
20	10-405996-202	MS27488-20-2
22D	10-405996-222	MS27488-22-2
4	10-405996-43	MS27488-4-3
0	10-405996-03	MS27488-0-3

Series II JT

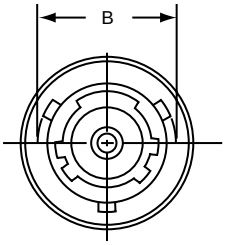

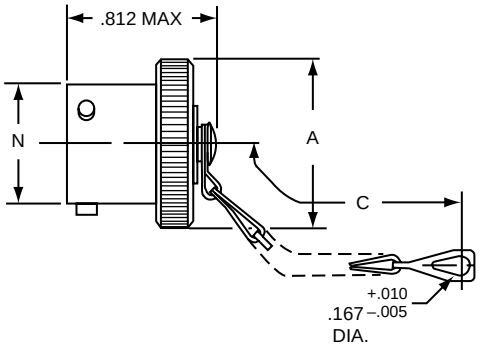

*** 10-547138-XXX (MS27510XXXC)**

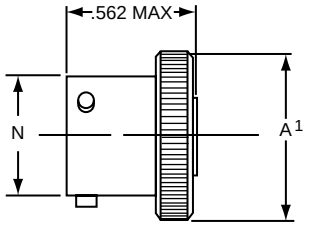

*** 10-241853-XXX (MS27510XXXA)**

For MS stamping identification, accessories must be ordered by MS part number.
If ordered by 10- part number, they will be stamped with said number.
* To complete order number, add shell size and suffix number.
For example, shell size 10 with cadmium plate, nickel base would be 10-241853-107, MS27510A10C or MS27510A10A).

Shell Size	A Dia. Max.	A[1] Dia. Max.	B +.000 –.016	C Approx.	N Dia. +.001 –.005
8	.719	.703	.563	3.000	.473
10	.844	.828	.680	3.000	.590
12	1.000	.984	.859	3.500	.750
14	1.125	1.109	.984	3.500	.875
16	1.250	1.234	1.108	3.500	1.000
18	1.375	1.359	1.233	3.500	1.125
20	1.500	1.484	1.358	4.000	1.250
22	1.625	1.609	1.483	4.000	1.375
24	1.750	1.734	1.610	4.000	1.500

All dimensions for reference only.

Finish	10-Number Suffix	MS Number Suffix with chain	MS Number Suffix without chain
Chromate treat	-XX0		
Anodic coating	-XX5	CXXC	CXXA
Cadmium Plate Nickel base	-XX7	AXXC	AXXA
Olive Drab, Cadmium, Nickel base	-XX9	BXXC	BXXA
Electroless Nickel	-XXG	FXXC	FXXA

Amphenol Aerospace

Series II JT

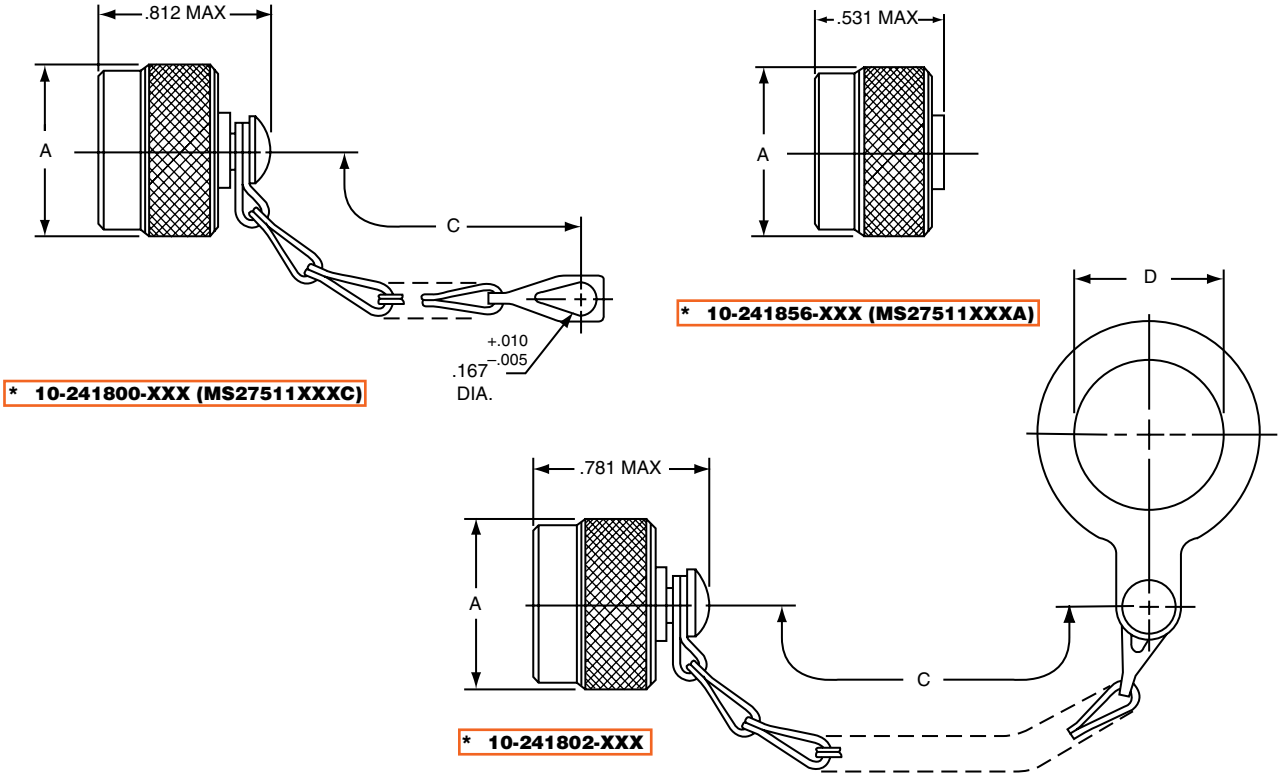

For MS stamping identification, accessories must be ordered by MS part number.
If ordered by 10- part number, they will be stamped with said number.
* To complete order number, add shell size and suffix number.
For example, shell size 10 with cadmium plate, nickel base would be 10-241802-107, MS27511A10C, MS27511A10A

Shell Size	A Dia. Max.	C Approx.	D +.010 −.000
8	.719	3.000	.891
10	.844	3.000	1.016
12	1.000	3.500†	1.141
14	1.125	3.500	1.266
16	1.250	3.500	1.391
18	1.375	3.500	1.516
20	1.500	4.000	1.641
22	1.625	4.000	1.766
24	1.750	4.000	1.891

†3.000 for MS27511
All dimensions for reference only.

Finish	10-Number Suffix	MS Number Suffix with chain	MS Number Suffix without chain
Chromate treat	-XX0		
Anodic Coating	-XX5	CXXC	CXXA
Cadmium Plate Nickel Base	-XX7	AXXC	AXXA
Olive Drab, Cadmium, Nickel base	-XX9	BXXC	BXXA
Electroless nickel	-XXG	FXXC	FXXA

Strain relief (crimp type)

Series II JT **Series I LJT**

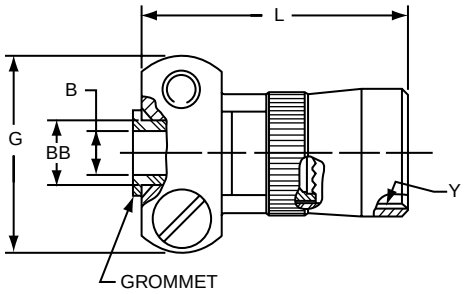

*** 10-405982-XXX (MS27506XXX-2 reference M85049/49)**

For MS stamping identification, accessories must be ordered by MS part number.
If ordered by 10-part number, they will be stamped with said number.

*To complete order number, add shell size and suffix number.

Finish	10-Number Suffix	MS27506 Suffix	M85049/49 Suffix
Chromate treat	-XX0		NA
Anodic coating	-XX5	CXX-2	(-2-XXA)
Cadmium plate nickel base	-XX7	AXX-2	NA
Olive drab, cadmium, nickel base	-XX9	BXX-2	(-2-XXW)
Electroless nickel	-XXG	FXX-2	(-2-XXN)

For example: Shell size 10 with cadmium plate, nickel base would be 10-405982-107 or M85049/49-2-10W

Shell Size	B Dia. +.010–.025	G Max.	L Max.	Y Thread (Modified)		BB Dia. +.000 –.011	Screw Size
				Size Class 2B	Modified Minor Dia.		
8	.125	.775	.984	.4375-28UNEF	.399 – .405	.250	6-32UNC
10	.188	.837	.984	.5625-24UNEF	.524 – .529	.312	6-32UNC
12	.312	.963	.984	.6875-24UNEF	.649 – .654	.438	6-32UNC
14	.375	1.087	1.234	.8125-20UNEF	.766 – .771	.562	6-32UNC
16	.500	1.150	1.234	.9375-20UNEF	.891 – .896	.625	6-32UNC
18	.625	1.400	1.234	1.0625-18UNEF	1.002 – 1.007	.750	8-32UNC
20	.625	1.400	1.234	1.1875-18UNEF	1.135 – 1.140	.750	8-32UNC
22	.750	1.587	1.359	1.3125-18UNEF	1.252 – 1.257	.938	8-32UNC
24	.800	1.681	1.281	1.4375-18UNEF	1.377 – 1.382	1.000	8-32UNC

All dimensions for reference only.
Note: For solder type cable clamp 10-241055-XXX (M85049/49) consult Amphenol, Sidney, NY.

Amphenol Aerospace

Series I LJT

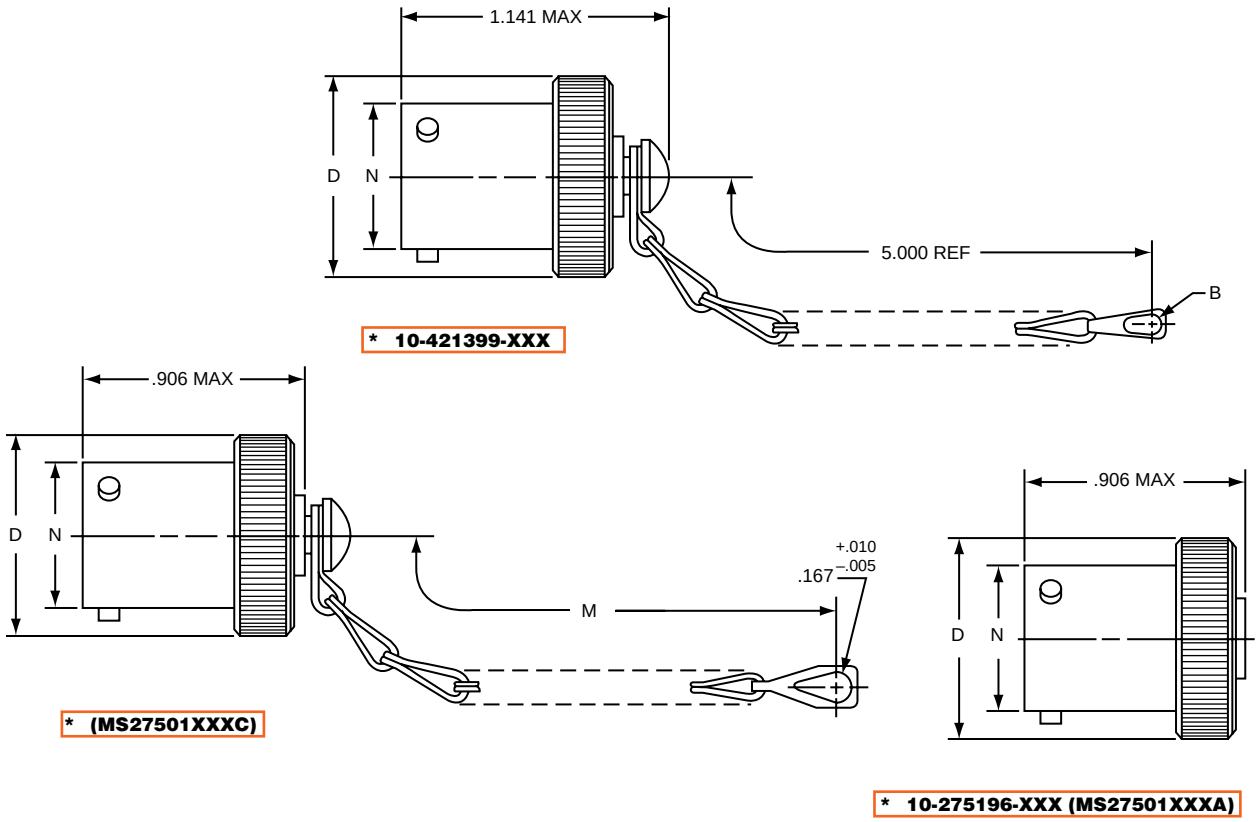

*To complete order number, add shell size and suffix number.
For example, shell size 11 with cadmium plate, nickel base would be 10-421399-117, MS27501A11C, MS27501A11A.

Shell Size	B Dia. Ref	D Dia. Max.	M ±.250	N Dia. +.001 –.005
9	.180	.812	3.000	.572
11	.180	.938	3.000	.700
13	.180	1.062	3.500	.850
15	.180	1.188	3.500	.975
17	.180	1.312	3.500	1.100
19	.209	1.438	3.500	1.207
21	.209	1.562	4.000	1.332
23	.209	1.688	4.000	1.457
25	.209	1.812	4.000	1.582

All dimensions for reference only.

Finish	10- Number Suffix	MS Number Suffix with chain	MS Number Suffix without chain
Chromate treat	-XX0		
Anodic coating	-XX5		
Cadmium Plate Nickel base	-XX7	AXXC	AXXA
Olive Drab, Cadmium, Nickel base	-XX9	BXXC	BXXA
Electroless nickel	-XXG	FXXC	FXXA

Series I LJT

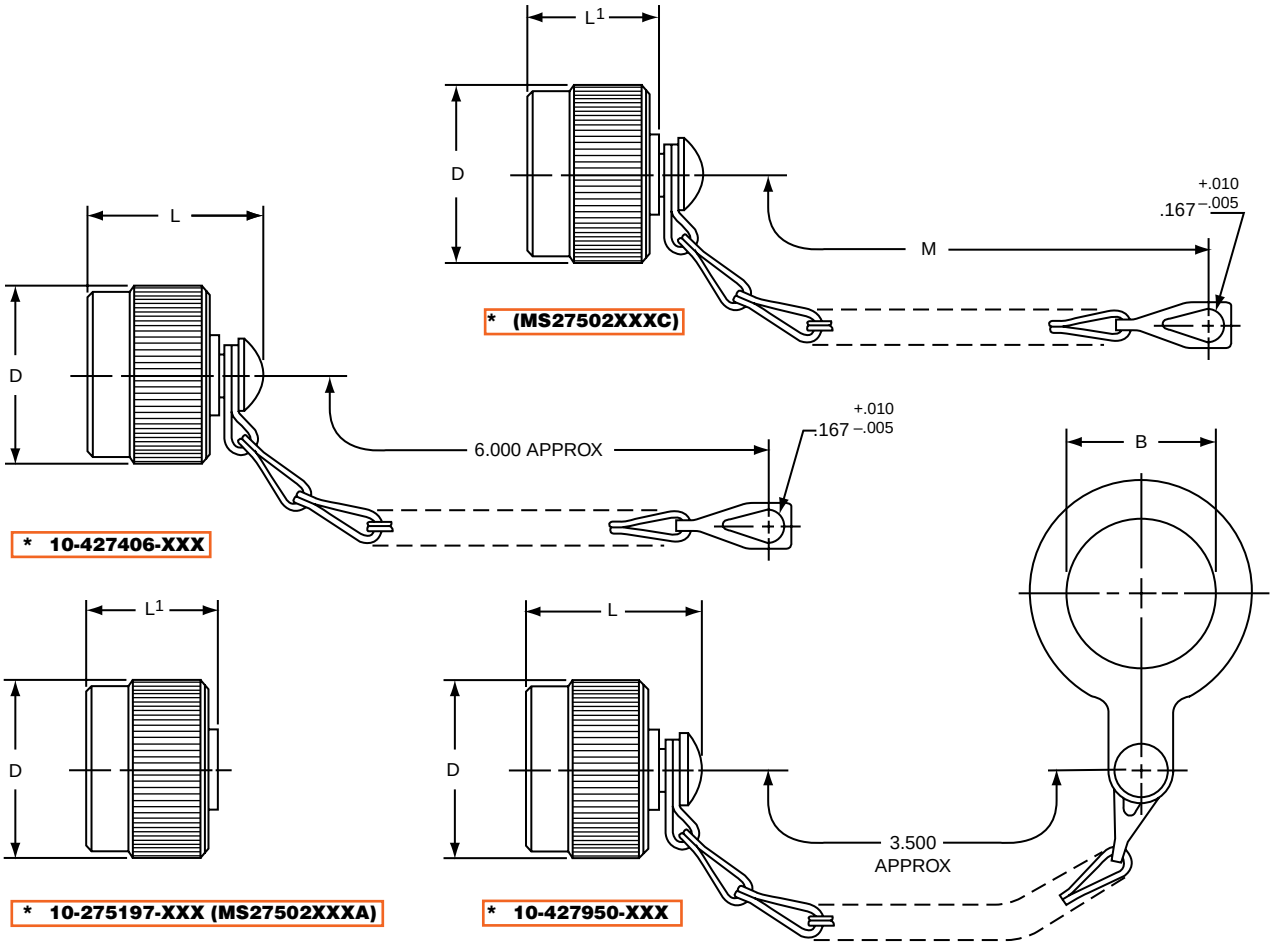

For MS stamping identification, accessories must be ordered by MS part number.
If ordered by 10- part number, they will be stamped with said number.
*To complete order number, add shell size and suffix number.
For example, shell size 11 with cadmium plate, nickel base would be 10-427406-117, MS27502A11C, MS27502A11A.

Shell Size	B Dia. +.010 –.000	D Dia. Max.	L Max.	L1 Max	M ±.250
9	.703	.844	1.070	.844	3.000
11	.844	.969	1.070	.844	3.000
13	1.016	1.125	1.070	.844	3.500
15	1.141	1.250	1.070	.844	3.500
17	1.266	1.406	1.070	.844	3.500
19	1.391	1.500	1.070	.844	3.500
21	1.516	1.625	1.070	.844	4.000
23	1.641	1.750	1.070	.844	4.000
25	1.766	1.875	1.089	.875	4.000

All dimensions for reference only.

Finish	10-Number Suffix	MS Number Suffix with chain	MS Number Suffix without chain
Chromate treat	-XX0		
Anodic coating	-XX5	CXXC	CXXA
Cadmium Plate Nickel base	-XX7	AXXC	AXXA
Olive Drab, Cadmium, Nickel base	-XX9	BXXC	BXXA
Electroless Nickel	-XXG	FXXC	FXXA

Amphenol Aerospace

Series I LJT

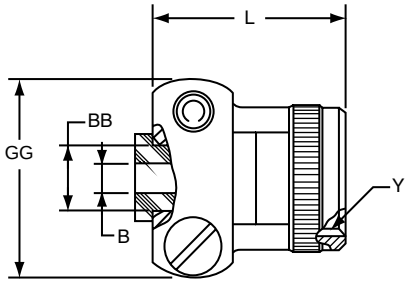

*** 10-436792-XXX**

For military type cable clamp see MS27506 or M85049/49 on page 98.

*To complete order number, add shell size and suffix number.

Finish	10-Number Suffix
Chromate treat	-XX0
Anodic coating	-XX5
Cadmium Plate Nickel base	-XX7
Olive Drab, Cadmium, Nickel base	-XX9
Electroless Nickel	-XXG

For example: Shell size 11 with cadmium plate, nickel base would be 10-436792-117.

Shell Size	B Dia. +.010 –.025	L Max.	Y Thread Class 2B (Plated)	GG Max.	BB Dia. +.000 –.011
9	.125	.859	.4375-28 UNEF	.775	.250
11	.188	.859	.5625-24 UNEF	.837	.312
13	.312	.859	.6875-24 UNEF	.963	.438
15	.375	1.109	.8125-20 UNEF	1.087	.562
17	.500	1.109	.9375-20 UNEF	1.150	.625
19	.625	1.109	1.0625-18 UNEF	1.400	.750
21	.625	1.109	1.1875-18 UNEF	1.400	.750
23	.750	1.234	1.3125-18 UNEF	1.587	.938
25	.800	1.234	1.4375-18 UNEF	1.681	1.000

All dimensions for reference only.

Crimp/Thermocouple Contacts, Plastic Caps, Sealing Plugs

Series II JT

Series I LJT

JT/LJT Crimp Contacts

Contact Size	Pins (JT/LJT) MS No.	JT Sockets MS. No	LJT Sockets MS. No
8 (Coax)*	M39029/60-367	NA	M39029/59-366
8 (Twinax)	M39029/90-529***	NA	M39029/91-530
10 (Power)	M39029/58-528	NA	M39029/56-527
12	M39029/58-365	M39029/57-359	M39029/56-353
16	M39029/58-364	M39029/57-358	M39029/56-352
20	M39029/58-363	M39029/57-357	M39029/56-351
22	M39029/58-362	M39029/57-356	M39029/56-350
22M	M39029/58-361	M39029/57-355	M39029/56-349
22D	M39029/58-360	M39029/57-354	M39029/56-348

THERMOCOUPLE CONTACTS

Contact Size	Material	JT/LJT Pins	JT Sockets	LJT Sockets
20	Chromel	10-407862-310	10-407863-310	10-407236-310
	Alumel	10-407862-320	10-407863-320	10-407865-320
	Iron	10-407862-335	10-407863-335	10-407865-335
	Constantan	10-407862-342	10-407863-342	10-407865-342

Partial Listing. If you do not see the contact for your application, consult Amphenol Aerospace, Sidney, N.Y.

THERMOCOUPLE CONTACTS PYLE VERSION

Contact Size	Pins (JT/LJT)		Sockets (LJT)		Material
	Spec Number	Pyle Number	Spec Number	Pyle Number	
22D	M39029/87-472	T3-4022-10P	M39029/88-484	T3-4122-10P	CHROMEL
22D	M39029/87-471	T3-4022-10R	M39029/88-483	T3-4122-10R	ALUMEL
20	M39029/87-476	T3-4020-10P	M39029/88-488	TS-4120-10P	CHROMEL
20	M39029/87-475	T3-4020-10R	M39029/88-487	T3-4120-10R	ALUMEL
16	M39029/87-480	T3-4016-10P	M39029/88-492	T3-4116-10P	CHROMEL
16	M39029/87-479	T3-4016-10R	M39029/88-491	T3-4116-10R	ALUMEL

PLASTIC PROTECTION CAPS

Shell Size		Plug	Receptacle
8		10-70500-10	10-70506-10S
	9	10-70506-14	10-70500-10
10		10-70506-14	10-70506-12
	11	10-70506-16	10-70500-12
12		10-70506-16	10-70506-14
	13	10-70506-18	10-70500-14
14		10-70506-18	10-70506-16
	15	10-70506-20	10-70500-16
16		10-70506-20	10-70506-18
	17	10-70506-22	10-70500-18
18		10-70506-22	10-70506-20
	19	10-70506-24	10-70500-20
20		10-70506-24	10-70506-22
	21	10-70576-24	10-70500-22
22		10-70576-24	10-70506-24
	23	10-70506-28	10-70500-24
24		10-70506-28	10-70576-24
	25	10-558651-25	10-70506-28

SEALING PLUGS

Contact Size	Commercial No.	Military No.
8 (Coax)	10-482099-8	MS27488-8
8 (Twinax)	T3-4008-59P	N/A
10 (Power)	10-576225	N/A
12	10-405996-12	MS27488-12
16	10-405996-16	MS27488-16
20	10-405996-20	MS27488-20
22	10-405996-22	MS27488-22
22M	10-405996-22	MS27488-22
22D	10-405996-22	MS27488-22

Amphenol Aerospace

SJT

PLUG PROTECTION CAP

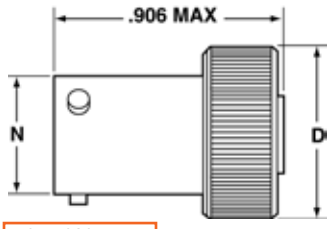

*10-476801-XXX

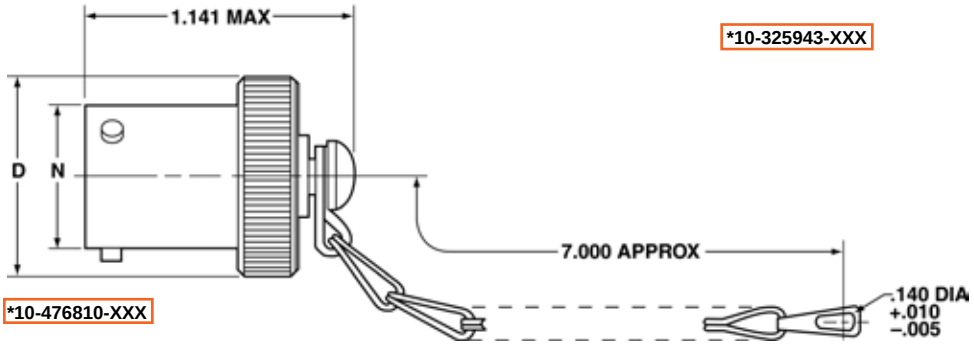

*10-476810-XXX

RECEPTACLE PROTECTION CAP

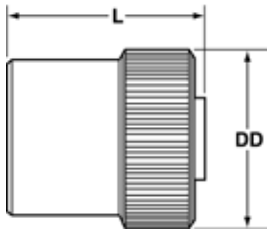

*10-325943-XXX

*To complete order number, add shell size and suffix number. For example, shell size 10 with bright cadmium plated nickel base, 10-476810-107.

Plug Shell Size	D Dia. Max.	N Dia. +.001 –.005
8	.688	.473
10	.812	.590
12	.969	.750
14	1.094	.875
16	1.219	1.000
18	1.344	1.125
20	1.469	1.250
22	1.594	1.375
24	1.719	1.500

All dimensions for reference only

*To complete order number, add shell size and suffix number. For example, shell size 10 with bright cadmium plated nickel base, 10-325943-107.

Receptacle Shell Size	DD Dia. Max.	L Max.
8	.734	.828
10	.844	.828
12	1.016	.828
14	1.141	.828
16	1.265	.828
18	1.391	.828
20	1.500	.828
22	1.625	.828
24	1.750	.859

Finish	Suffix
Bright Cadmium Plated Nickel Base	XX7
Anodic Coating (Alumilite)	XX5
Chromate Treated (Iridite 14-2)	XX0
Olive Drab Cadmium Plate Nickel Base	XX9
Electroless Nickel Coating	XXG

DUMMY RECEPTACLE

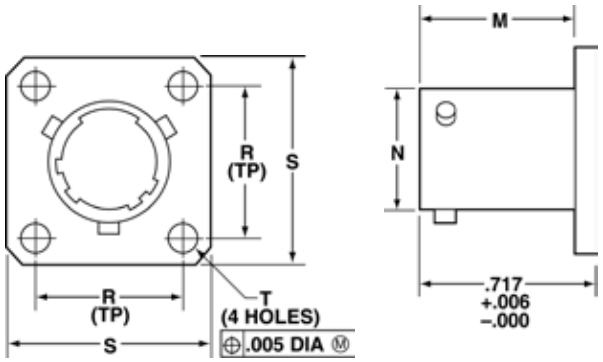

*10-476807-XXX

Finish	Suffix
Bright Cadmium Plated Nickel Base	XX7
Anodic Coating (Alumilite)	XX5
Chromate Treated (Iridite 14-2)	XX0
Olive Drab Cadmium Plate Nickel Base	XX9
Electroless Nickel Coating	XXG

* To complete order number, add shell size and suffix number. For example, shell size 10 with bright cadmium plated nickel base, 10-476807-107.

Dummy Receptacle Shell Size	D Dia. Max.	L Max.
8	.734	.828
10	.844	.828
12	1.016	.828
14	1.141	.828
16	1.265	.828
18	1.391	.828
20	1.500	.828
22	1.625	.828
24	1.750	.859

All dimensions for reference only

CABLE CLAMP

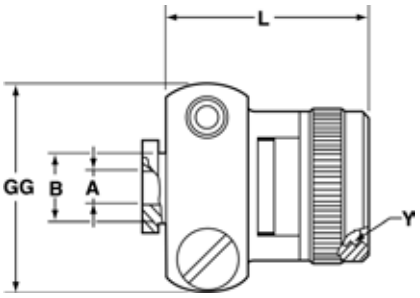

*10-476808-XXX

Finish	Suffix
Bright Cadmium Plated Nickel Base	XX7
Anodic Coating (Alumilite)	XX5
Chromate Treated (Iridite 14-2)	XX0
Olive Drab Cadmium Plate Nickel Base	XX9
Electroless Nickel Coating	XXG

* To complete order number, add shell size and suffix number. For example, shell size 10 with bright cadmium plated nickel base, 10-476808-107.

Cable Clamp Shell Size	A Dia. +.010 –.025	B Dia. +.000 –.011	L Max.	Y Thread Class 2B UNEF (Plated)	GG Max.
8	.125	.250	.922	.4375-28	.775
10	.188	.312	.922	.5625-24	.837
12	.312	.438	.922	.6875-24	.963
14	.375	.562	1.172	.8125-20	1.087
16	.500	.625	1.172	.9375-20	1.150
18	.625	.750	1.172	1.0625-18	1.400
20	.625	.750	1.172	1.1875-18	1.400
22	.750	.938	1.297	1.3125-18	1.587
24	.800	1.000	1.297	1.4375-18	1.681

All dimensions for reference only

Amphenol Aerospace

CONTACTS & SEALING PLUGS

Contact Size	SJT Pins	SJT Sockets	Sealing Plugs
8 (Coax)	21-33102-21**	21-33101-21**	10-482099-8
8 (Twinax)	21-33190-529†	21-33191-530†	10-482099-8
10 (Power)	10-251415-105	10-407035-105	Not Available
12	10-251415-12H	10-407035-125	10-405996-12 Yellow
16	10-251415-165	10-407035-165	10-405996-16 Blue
20	10-251415-205	10-407035-205 10-497403-205††	10-405996-20 Red
22*	10-251415-225	10-407035-225	10-405996-22 Black
22M*	10-251415-235	10-407035-235	10-405996-22 Black
22D	10-251415-725	10-407035-725	10-405996-22 Black

Above part numbers include standard finish designation – gold plating over suitable underplate in accordance with SAE AS39029. For other finish variations, consult Amphenol, Sidney, NY.

* Inactive for new design.

** 21-33102-21 and 21-33101-21 are for use with RG180B/U and RG195A/U cable. For other size 8 coax or optional sizes 12 and 16 coax contacts available for use in SJT connectors, see catalog 12-130 or consult Amphenol, Sidney, NY.

† 21-33190-529 and 21-33191-530 are for use with M17/176-00002 cable.

†† Optional design – see slash sheet MS39029.

For other contact options available for use in SJT connectors, (wire-wrap, thermocouple, fiber optic) consult Amphenol, Sidney, NY.

PLASTIC PROTECTION CAPS

Shell Size	Plug	Receptacle
8	10-70500-10	10-70506-10S
10	10-70500-14	10-70506-12
12	10-70500-16	10-70506-14
14	10-70500-18	10-70506-16
16	10-70500-20	10-70506-18
18	10-70500-22	10-70506-20
20	10-70500-24	10-70506-22
22	10-70524-1	10-70506-24
24	10-70506-28	10-70524-1

MIL-DTL-38999, Series III TV, II JT, I LJT
Universal "Header Assembly"
for Flex Print or PC Board

Series III TV | **Series II JT** | **Series I LJT**

Mounts to all MIL-DTL-38999 and *MIL-DTL-26482 Connectors

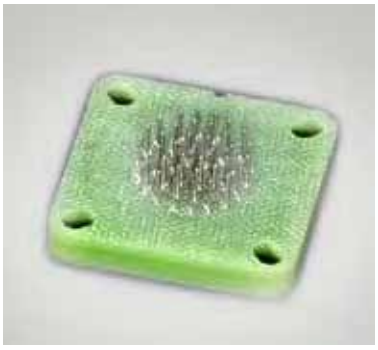

Termination of PC tail connectors to a flex print or a printed circuit board represents a major cost in the manufacturing process for users. When adding flex or printed circuit board assemblies to an expensive filter or filter/transient protection connector, the total cost of a failed solder joint, a bent pin, or an unanticipated electrical failure becomes prohibitive. The universal header assembly from Amphenol provides for easy separation of the connector from the board on these occasions. The header assembly is comprised of a short pin/socket contact. The tail end of the contact is soldered to the through hole of the flex or printed circuit board. The socket is embedded in the insulator, making electrical contact with the printed circuit tail of the connector.

Headers provide easy separation of the connector from the PC board.

Header Assemblies Provide Cost Savings

Incorporation of the header assembly provides the user with time and cost saving potentials. These header assemblies can be vapor phase or wave soldered to flex or printed circuit boards prior to the receipt of the EMI/EMP connector. Headers can be installed to standard connectors, allowing for electrical testing that would adversely affect the sensitive diodes, MOV's or capacitors in the EMI/EMP connectors. Expensive connector assemblies can be easily removed from and reattached to the header assembly as the manufacturing process dictates.

Mounting Applications

Shell modifications are recommended, but are not necessary. The header assembly can be attached to connectors with standard flange placement or directly to the circuit board. The ideal application would involve either a single flange moved all the way to the rear of the connector or a double flange. Cinch nuts can be installed in either flange to allow easier mounting to the panel or the header assembly. The forward flange would mount the connector to the panel; the rear flange would be used to mount the header assembly. Various types of captivated or loose attaching screws can be utilized for unique applications.

Amphenol universal headers are slotted to allow mounting to all series of MIL-DTL-38999 or MIL-DTL-26482* connectors without special alterations. They are of similar dimension as the flange of the mounting connector and are approximately .185 inches (4.70 mm) thick.

* For information on Header Assemblies for MIL-DTL-26482 connector consult Amphenol, Sidney NY.

Cylindrical Configuration

- 3 PCB stickout dimensions are available.
- Size 22 contacts use .175 thick headers
- Size 16 to 20 contacts use .195 thick headers
- Consult Amphenol, Sidney NY for additional configurations.
- Headers for cylindrical connectors accommodate up to 128 pins. For MIL-DTL-38999 insert arrangements chart see pages 4-7 and insert drawings on pages 8-14.

Mounting to Rectangular ARINC Connectors

- Headers for ARINC connector arrangements accommodate up to 150 pins
- Consult Amphenol, Sidney, NY for ARINC configurations and detailed dimensions.

Materials

- Body is molded or machined from FR-4.
- Electrical engagement areas of the header contact are plated with .00003 inches minimum of gold over .00005 inches minimum of nickel.

See drawing of standard header on next page.

Amphenol Aerospace

Series III TV | **Series II JT** | **Series I LJT**

The drawing below shows the standard header assembly for use with MIL-DTL-38999 connectors. Consult Amphenol Aerospace, Sidney NY for drawings of headers for ARINC configurations.

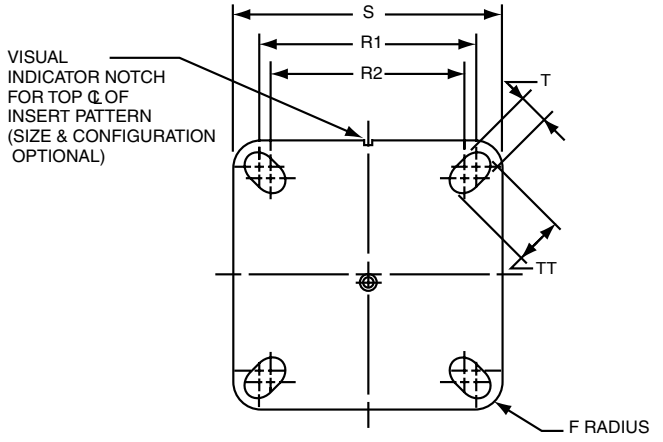

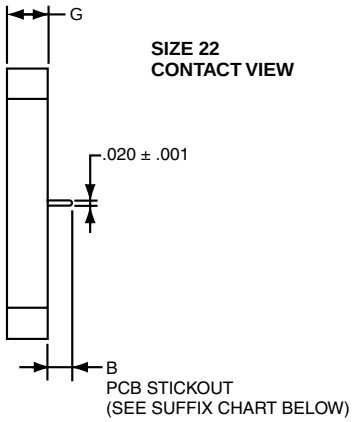

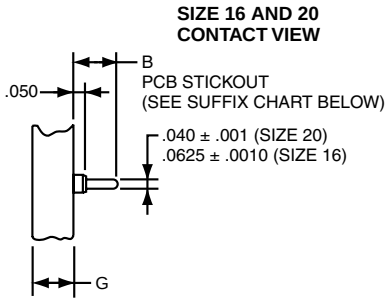

Assembly Part Number	Shell Size	F Radius	G ± .005	S ± .005	T + .008 – .006	R1 TP†	R2 TP†	TT + .008 – .006
21-904008-XX( )	8/9	.094		.938	.128	.719	.594	.216
21-904010-XX( )	10/11	.094		1.031	.128	.812	.719	.194
21-904012-XX( )	12/13	.094		1.125	.128	.906	.812	.194
21-904014-XX( )	14/15	.125		1.219	.128	.969	.906	.173
21-904016-XX( )	16/17	.125		1.312	.128	1.062	.969	.194
21-904018-XX( )	18/19	.125		1.438	.128	1.156	1.062	.194
21-904020-XX( )	20/21	.125		1.562	.128	1.250	1.156	.194
21-904022-XX( )	22/23	.125		1.688	.154	1.375	1.250	.242
21-904024-XX( )	24/25	.125		1.812	.154	1.500	1.375	.242

See Suffix Chart

Assemblies containing Size 22 contacts only: .175
Assemblies containing Size16 or 20 contacts: .195

† TP designates true position dimensioning.

NOTE:
Size 22 accepts .018 to .022 dia. PCB tails.
Size 16 accepts .048 to .064 dia. PCB tails.
Size 20 accepts .037 to .043 dia. PCB tails.

HOW TO ORDER INFORMATION

For Header Assembly with MIL-DTL-38999 Connectors

Use coded number as follows:

21-9040 XX - XX X

- Designates Amphenol Header Assembly
- Shell size designation for MIL-DTL-38999 Series I, II, III and IV see Suffix chart.
- Arrangement number - See MIL-STD-1560 or MIL-STD-1669. See insert availability charts on pages 4-7.
- Contact PCB Stickout designation See Suffix chart.

For how to order information on adapters to be used with ARINC connectors, consult Amphenol, Sidney NY.

ASSEMBLY NUMBER SUFFIX CHART

Shell Size Designation*	Arrangement Number Suffix***	Contact PCB Stickout**	
		Suffix	B ± .015 Stickout
08	Insert Arrangement Suffix from MIL-STD-1560 or MIL-STD-1669	1	.120
10		2	.185
12		3	.270
14			
16			
18			
20			
22			
24			

*Shell size designation for MIL-DTL-38999 Series I, II, III and IV and MIL-DTL-26482 Series 1 and 2.
Examples: Shell size 9 use 08. Shell size 25 use 24.

** Size 22 contacts available in all 3 stickout lengths.
Size 16 and 20 contacts available only in .185 and .270 lengths.

*** Insert arrangement 14-97 and 15-97 are not available at this time. Consult Amphenol, Sidney NY for information.

Series III TV | **Series II JT** | **Series I LJT** | **SJT**

The following data includes information pertaining to the application tools which have been established for crimping, inserting, and removing contacts incorporated in the TV, CTV and MIL-DTL-38999 Series III connectors. For additional information on coax, twinax and triax contact tools see High Speed Contact section of this catalog. All crimping tools included are the "full cycling" type and when used as specified in the installation instructions (L-624 and L-844) covering the TV, CTV and MS series connectors, will provide reliable crimped wire to contact terminations. There is a possibility of additional crimping tools other than those included being available at present or in the future for this specific application.

CRIMPING TOOLS

Contact Size/Type	Crimping Tool	Turret Die or Positioner
12 Pin and Socket	M22520/1-01	M22520/1-04
16 Pin and Socket	M22520/1-01 M22520/7-01	M22520/1-04 M22520/7-04
20 Pin and Socket	M22520/1-01 M22520/2-01 M22520/7-01	M22520/1-04 M22520/2-10 M22520/7-08
22, 22D, 22M Pin	M22520/2-01 M22520/7-01	M22520/2-09 M22520/7-07
22, 22D, 22M Socket Series I, III	M22520/2-01 M22520/7-01	M22520/2-07 M22520/7-05
22D Socket Series II	M22520/2-01 M22520/7-01	M22520/2-06 M22520/7-06
8 Twinax Center Pin and Socket	M22520/2-01	M22520/2-37
8 Twinax Intermediate Outer Pin & Socket	M22520/5-01	M22520/5-200

Where 2 or 3 tools are listed for a contact size, only one tool and its die or positioner are required to crimp the contact. The above crimping tools and positioners are available from the approved tool manufacturer.

Contact Size/Type	Crimping Tool	Turret Die or Positioner
8 Coaxial Inner Pin and Socket	M22520/2-01	M22520/2-31
8 Coaxial Outer Pin and Socket	M22520/5-01	M22520/5-05 Die Closure B
	M22520/5-01	M22520/5-41 Die Closure B
	M22520/10-01	M22520/10-07 Die Closure B
16 Coaxial Inner Pin and Socket	M22520/2-01	M22520/2-35
16 Coaxial Outer Pin and Socket	M22520/4-01	M22520/4-02
12 Coaxial Inner Pin and Socket	M22520/2-01	M22520/2-34
12 Coaxial Outer Pin and Socket	M22520/31-01	M22520/31-02
10 (Power)	TP-201423	

INSERTION TOOLS

Use with Contact Size	Plastic Tools		Metal Tools			
			Angle Type		Straight Type	
	MS Part Number	Color	MS Part No.	Commercial Part No.	Commercial Part No.	Color
10 (Power	M81969/14-05*	Gray / (White)	M81969/8-11	†	†	Green
12	M81969/14-04*	Yellow / (White)	M81969/8-09	11-8674-12	11-8794-12	Yellow
16	M81969/14-03*	Blue / (White)	M81969/8-07	11-8674-16	11-8794-16	Blue
20	M81969/14-10*	Red / (Orange)	M81969/8-05	11-8674-20	11-8794-20	Red
22	M81969/14-09	Brown/White	M81969/8-03	11-8674-22	11-8794-22	Brown
22D, 22M	M81969/14-01*	Green / (White)	M81969/8-01	11-8674-24	11-8794-24	Black
8 Coaxial	None Required					
8 Twinax	None		M81969/46-06**	None		Red

REMOVAL TOOLS

Use with Contact Size	Plastic Tools		Metal Tools				
				Angle Type		Straight Type	
	MS Part Number	Color	For Unwired Contacts Commercial Part No.	MS Part No.	Commercial Part No.	Commercial Part No.	Color
10 (Power)	M81969/14-05*	(Gray) / White	†	M81969/8-12	†	†	Green / White
12	M81969/14-04*	(Yellow) / White	11-10050-11	M81969/8-10	11-8675-12	11-8795-12	Yellow / White
16	M81969/14-03*	(Blue) / White	11-10050-10	M81969/8-08	11-8675-16	11-8795-16	Blue / White
20	M81969/14-10*	(Orange) / Red	11-10050-9	M81969/8-06	11-8675-20	11-8795-20	Red / Orange
22	M81969/14-09*	(Brown)/White	11-10050-8	M81969/8-04	11-8675-22	11-8795-22	Brown/White
22D, 22M	M81969/14-01*	(Green) / White	11-10050-7	M81969/8-02	11-8675-24	11-8795-24	Green / White
8 Coaxial	M81969/14-12	Green	None	None	11-9170	DRK264-8††	N/A
8 Twinax	M81969/14-12	Green	None	M81969/46-12**	11-9170	N/A	N/A

The M81969/8, 11-8674, 11-8675, and 11-8794 metal contact insertion and removal tools will accommodate wires having the maximum outside diameter as follows: Contact size 12: dia. is .155, size 16: dia. is .109, size 20: dia. is .077, size 22D: dia. is .050. When wire diameters exceed those specified, the plastic tools must be used.

* Double end insertion/removal tool.
** Twinax insertion tools are available only in a straight type, metal version.

† To be determined.
†† Contact Daniels Manufacturing Co. for availability.

Amphenol
MIL-DTL-26482, Series 2, Matrix®

TABLE OF CONTENTS

MIL-DTL-26482, Series 2, Matrix®

- Table of Contents 109
- Design Characteristics, Customer Options 110
- Insert Availability and Identification, Alternate Positioning 111
- Insert Arrangement Drawings 112, 113
- Class Descriptions, Performance Specifications 114
- How to Order (Military and Commercial) 115

Shell Styles:

- Wall Mounting Receptacle with Narrow Flange, Wall Mounting Receptacle with Wide Flange 116
- Cable Connecting Receptacle, Jam Nut Receptacle 117
- Straight Plug, Straight Plug with RFI Grounding Fingers 118

Contacts and Tools:

- Contact Information, Sealing Plugs, Crimping and Insertion/Removal Tools 119

Additional MIL-DTL-26482 Connectors

- Brief Description of Commercial/Military MIL-DTL-26482, Series 1 120
  (Covered in-depth in Amphenol Industrial Catalog 12-070)

MIL-DTL-26482 Series 2, Matrix® Typical Markets:

- Military & Commercial Aviation
  - Cockpit, Landing Gear, Aircraft Frame
- Military Aircraft Carriers
- Instrumentation/Process Control/Test Equipment
- C4ISR

Amphenol Aerospace

MIL-DTL-26482, Series 2, Matrix®

Bayonet Coupling Connectors

With Crimp Rear Release Contacts

Amphenol Aerospace offers the Matrix® Product line of MIL-DTL-26482*, Series 2 connectors.

This series provides a bayonet coupling connector with crimp rear insertable, rear releasable contacts.

DESIGN CHARACTERISTICS

- Medium size, environmentally resistant connector
- Recommended operating voltage to 1,000 VAC (RMS) at sea level
- Quick positive coupling assured by 3 point bayonet coupling system
- Visual confirmation of complete coupling
- Eliminates mismating by the use of five key/keyway design
- Insertion and removal of contacts from the rear of the connector assures no damage to the front that might affect the sealing characteristics
- Utilizes same standard qualified rear-release type plastic tool for contact insertion and removal
- Contacts are qualified to SAE AS39029** requirements – BIN coded (three color bands), and are crimped with standard crimp tools per MIL-DTL-22520
- Grommets are constructed of tear-resistant elastomer and experience no degradation when exposed to a broad range of fluids
- Sealing over a range of wire diameters is assured by a triple webbed grommet at the rear of the connector
- Closed entry socket side of the insert is designed with a lead-in chamfer and a hard face that will accept a pin contact bent within pre-established limits
- Elastomer interfacial seal on the pin side has raised barriers around each pin which displace into the socket chamfer when mated, providing a positive moisture seal

CUSTOMER OPTIONS

- Shell styles within this family include: Wall mount with either a narrow or a wide flange, jam nut single hole mount, and cable connecting receptacles, along with standard plugs or plugs with RFI grounding fingers, in shell sizes 8 to 24
- MS and Proprietary versions available
- Accommodation of contact sizes 20, 16 and 12
- 34 insert arrangement patterns available, accommodating from a minimum of 3 to a maximum of 55 circuits
- Alternate positioning available
- Various finishes are available (for information on non-cadmium zinc alloy plating, consult Amphenol Aerospace, Sidney, NY)

* MIL-DTL-26482 supersedes MIL-C-26482

** SAE AS39029 supersedes MIL-C-39029

MS3470
wall mounting receptacle with narrow flange

MS3472
wall mounting receptacle with wide flange

MS3471
cable connecting receptacle

MS3474
jam nut receptacle

MS3476
straight plug

MS3475
plug with RFI grounding fingers

Alternate Rotations

INSERT ARRANGEMENTS

Insert Arrangement	Service Rating	Total Contacts	Contact Size		
			12	16	20
8-33	I	3			3
8-98	I	3			3
10-6	I	6			6
12-3	II	3		3	
12-8	I	8			8
12-10	I	10			10
14-4	I	4	4		
14-5	II	5		5	
14-9S	I	9	4		5
14-12	I	12		4	8
14-15	I	15		1	14
14-18	I	18			18
14-19	I	19			19
16-8	II	8		8	
16-23S	I	23		1	22
16-26	I	26			26
18-8	I	8	8		
18-11S	II	11		11	
18-30S	I	30		1	29
18-32	I	32			32
20-16	II	16		16	
20-24S	I	24			24
20-39	I	39		2	37
20-41	I	41			41
22-12S	I	12	12		
22-19S	I	19	19		
22-21	II	21		21	
22-32S	I	32			32
22-41	I	41		14	27
22-55	I	55			55
22-95S	I	32	6		26
24-19S	II	19	19		
24-31	I	31		31	
24-61	I	61			61

Arrangements designated with an S are tooled in socket only.

ALTERNATE ROTATIONS OF INSERT

To avoid cross-plugging problems in applications requiring the use of more than one connector of the same size and arrangement, alternate rotations are available as indicated in the chart below.

As shown in the diagram, the front face of the pin insert is rotated within the shell in a clockwise direction from the normal shell key. The socket insert would be rotated counter-clockwise the same number of degrees in respect to the normal shell key.

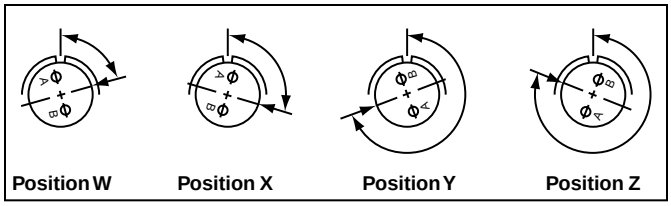

View looking into front face of pin insert or rear of socket insert.

Insert Arrangement	Degrees			
	W	X	Y	Z
8-33	90	–	–	–
8-98	–	–	–	–
10-6	90	–	–	–
12-3	–	–	180	–
12-8	90	112	203	292
12-10	60	155	270	295
14-4	45	–	–	–
14-5	40	92	184	273
14-9	15	90	180	270
14-12	43	90	–	–
14-15	17	110	155	234
14-18	15	90	180	270
14-19	30	165	315	–
16-8	54	152	180	331
16-23	158	270	–	–
16-26	60	–	275	338
18-8	180	–	–	–
18-11	62	119	241	340
18-30	180	193	285	350
18-32	85	138	222	265
20-16	238	318	333	347
20-24	70	145	215	290
20-39	63	144	252	333
20-41	45	126	225	–
22-12	–	–	–	–
22-19	15	90	225	308
22-21	16	135	175	349
22-32	72	145	215	288
22-41	39	135	264	–
22-55	30	142	226	314
22-95	26	180	266	–
24-19	30	165	315	–
24-31	90	225	255	–
24-61	90	180	270	324

front face of pin insert or rear face of socket insert illustrated

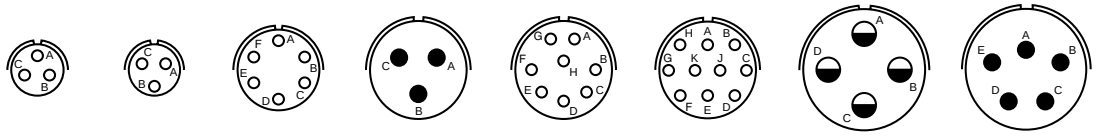

Insert Arrangement	8-33	8-98	10-06	12-03	12-08	12-10	14-04	14-05
Service Rating	I	I	I	II	I	I	I	II
Number of Contacts	3	3	6	3	8	10	4	5
Contact Size	20	20	20	16	20	20	12	16

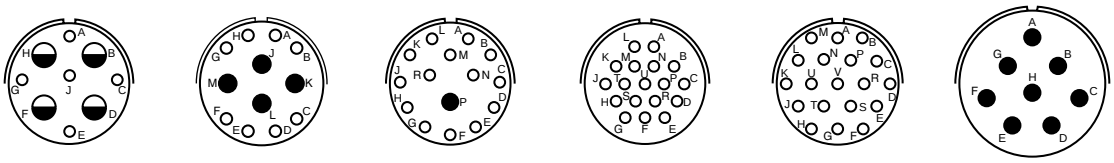

Insert Arrangement	14-09		14-12		14-15		14-18	14-19	16-08
Service Rating	I		I		I		I	I	II
Number of Contacts	5	4	8	4	14	1	18	19	8
Contact Size	20	12	20	16	20	16	20	20	16

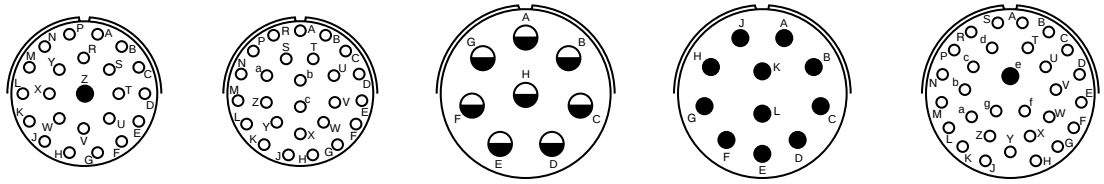

Insert Arrangement	16-23		16-26	18-08	18-11	18-30	
Service Rating	I		I	I	II	I	
Number of Contacts	22	1	26	8	11	29	1
Contact Size	20	16	20	12	16	20	16

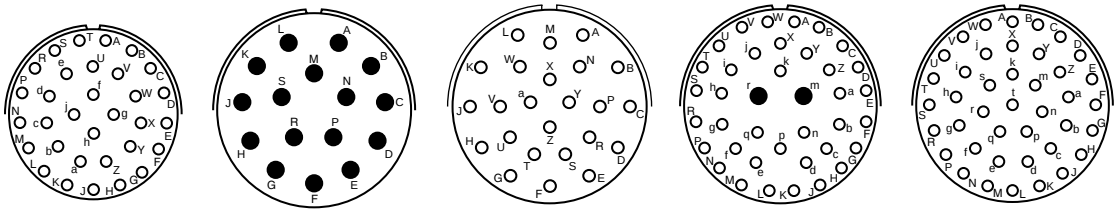

Insert Arrangement	18-32	20-16	20-24	20-39		20-41
Service Rating	I	II	I	I		I
Number of Contacts	32	16	24	37	2	41
Contact Size	20	16	20	20	16	20

NOTE: Connectors sold as mil-spec connectors will have mil-spec markings on the insert (a "snail-trail" designating the numerical path). Commercial versions will have insert markings as shown here.

CONTACT LEGEND ○ 20 ● 16 ◒ 12

front face of pin insert or rear face of socket insert illustrated

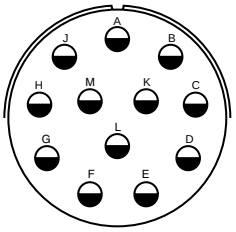

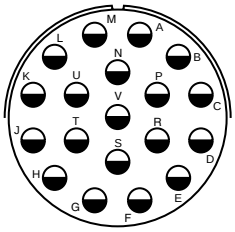

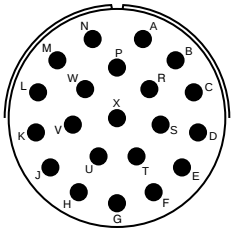

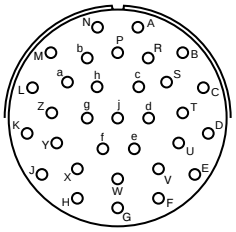

Insert Arrangement	22-12	22-19	22-21	22-32
Service Rating	I	I	II	I
Number of Contacts	12	19	21	32
Contact Size	12	12	16	20

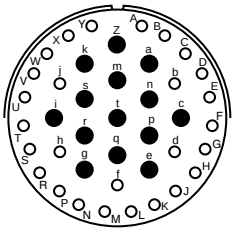

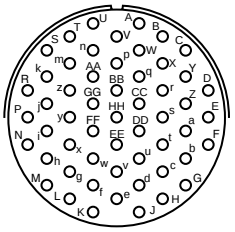

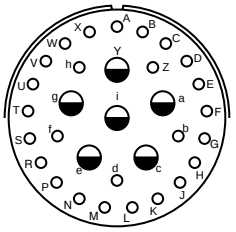

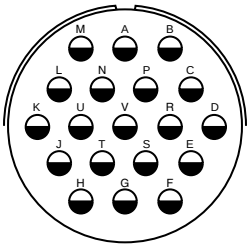

Insert Arrangement	22-41		22-55	22-95		24-19
Service Rating	I		I	I		II
Number of Contacts	27	14	55	26	6	19
Contact Size	20	16	20	20	12	12

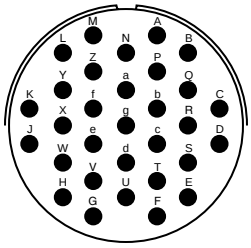

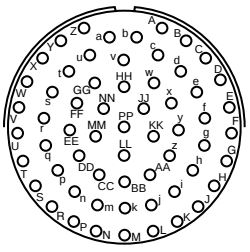

Insert Arrangement	24-31	24-61
Service Rating	I	I
Number of Contacts	31	61
Contact Size	16	20

NOTE: Connectors sold as mil-spec connectors will have mil-spec markings on the insert (a "snail-trail" designating the numerical path). Commercial versions will have insert markings as shown here.

CONTACT LEGEND ○ 20 ● 16 ◒ 12

CLASS DESCRIPTIONS

Military MIL-DTL-26482, Series 2	Amphenol/Matrix Commercial MB1 Series	Description
Class L	Class R	Aluminum shell, electroless nickel finish, fluid resistant
Class E	–	Inactive, superceded by Class L*
Class R	–	Inactive, superceded by Class L*
Class A	Class A	Aluminum shell, black non-conductive anodized finish, fluid resistant
–	Class G	Stainless steel shell, passivated, fluid resistant
Class W	Class W	Aluminum shell, olive drab cadmium plated, corrosion/fluid resistant

* Ref. MIL-DTL-26482

PERFORMANCE SPECIFICATIONS

SERVICE RATINGS**

Service Rating	Recommended Operating AC Voltage at Sea Level	Test Voltage AC (RMS), 60 cps			
		Sea Level	50,000 ft.	70,000 ft.	110,000 ft.
I	600	1,500	500	375	200
II	1,000	2,300	750	500	200

** Service Rating is comparable to MS rating A. Miniature connectors rated Service Rating I will provide a minimum flashover voltage at sea level of 2,000 volts AC (RMS). Service Rating II is comparable to MS Service Rating D, and will provide a minimum flashover voltage of 2,800 volts AC (RMS) at sea level.

Please note that the electrical data given is not an establishment of electrical safety factors. This is left entirely in the designer's hands, as he can best determine which peak voltage, switching surges, transients, etc. can be expected in a particular circuit.

OPERATING TEMPERATURE RANGE

–65°C (–85°F) to 200°C (392°F)

ENVIRONMENTAL SEAL

Wired, mated connectors with the specified accessory attached will meet the altitude immersion test specified in MIL-DTL-26482.

DURABILITY

Minimum of 500 mating cycles.

SHOCK AND VIBRATION REQUIREMENTS

When tested as follows, the connector shall sustain no physical damage, or electrical discontinuity exceeding one microsecond.

SHOCK:

Pulse of an approximate half sine wave of 300g magnitude with duration of 3 milliseconds applied in three axes.

VIBRATION:

Sixteen hours of random vibration having a range of 50 to 2,000 Hz with a 41.7G peak level.

	1.	2.	3.	4.	5.	6.	7.
MIL-DTL-26482, Series 2	Connector Type	Connector Style	Service Class	Shell Size/Insert Arrangement	Contact Type	Alternate Rotation of Insert	Modification Number
MILITARY	MS	3470	W	12-10	P	W	NA
COMMERCIAL	MB1	0	W	12-10	P	W	(xxx)

Step 1. Military Connector Type

MS	Designates Military Standard

Step 2. Select a Connector Style

	Designates
3470	Wall Mount Receptacle with Narrow Flange
3472	Wall Mount Receptacle with Wide Flange
3471	Cable Connecting Receptacle
3474	Jam Nut Receptacle
3476	Straight Plug
3475	Straight Plug with RFI Grounding Fingers

Step 3. Select a Service Class

	Designates
L	Aluminum shell, electroless nickel finish, fluid resistant insert
A	Aluminum shell, black anodized finish, non-conductive fluid resistant insert
W	Aluminum shell, olive drab cadmium plated, fluid resistant insert

Note: For stainless steel shell, passivated, order by Amphenol®/Matrix® commercial Class G.
Class L inactivates classes E and R (Ref. MIL-DTL-26482)

Step 4. Select a Shell Size & Insert Arrangement from chart on page 111.

Shell Size & Insert Arrangements are on pages 111
First number represents Shell Size, second number is the Insert Arrangement.

Step 5. Select a Contact Type

	Designates
P	Pin Contacts
S	Socket Contacts
A	Less Pins
B	Less Sockets

Use A & B only when other than a full complement of power contacts is to be installed.

Step 6. Select an Alternate Rotation of Insert

"W", "X", "Y", "Z" designate that insert is rotated in its shell from normal position. No letter required for normal (no rotation) position. See page 111 for description of alternate positions.

For ordering information on accessories, such as protection caps and backshell hardware, contact Amphenol Aerospace, Sidney, NY.

Step 1. Commercial Connector Type

MB1	Designates Amphenol®/Matrix® Bayonet Coupling Connector

Step 2. Select a Connector Style

	Designates
0	Wall Mount Receptacle with Narrow Flange
1	Wall Mount Receptacle with Wide Flange
3	Cable Connecting Receptacle
4	Jam Nut Receptacle
6	Straight Plug
8	Straight Plug with RFI Grounding Fingers

Step 3. Select a Service Class

	Designates
A	Aluminum shell, black anodized finish, non-conductive, fluid resistant insert
R	Aluminum shell, electroless nickel finish, fluid resistant insert
G	Stainless steel shell, passivated, fluid resistant insert
W	Aluminum shell, cadmium plated, olive drab finish, fluid resistant insert

Step 4. Select a Shell Size & Insert Arrangement from chart on page 111.

Shell Size & Insert Arrangements are on pages 111.
First number represents Shell Size, second number is the Insert Arrangement.

Step 5. Select a Contact Type

	Designates
P	Pin Contacts
S	Socket Contacts

Step 6. Select an Alternate Rotation of Insert

"W", "X", "Y", "Z" designate that insert is rotated in its shell from normal position. No letter required for normal (no rotation) position. See page 111 for description of alternate positions.

Step 7. Modification Number

Consult Amphenol Aerospace, Sidney, NY for information.
For strain reliefs use the following codes:
(189) E-nut M85049/31 configuration
(190) Straight strain relief M85049/52 configuration
(191) 90° strain relief M85049/51 configuration

MS3470 (MB10) – MIL-DTL-26482, Series 2
Wall Mounting Receptacle (with Narrow Flange)

PART #

***To complete, see how to order page 115.**

	Connector Type	Shell Style	Service Class	Shell Size & Insert Arrg	Contact Type	Alternate Rotation of Insert	Modification Number
Military	**MS**	**3470**	X	X-X	X	X	NA
Commercial	**MB1**	**0**	X	X-X	X	X	(XXX)

MS3470
MB10

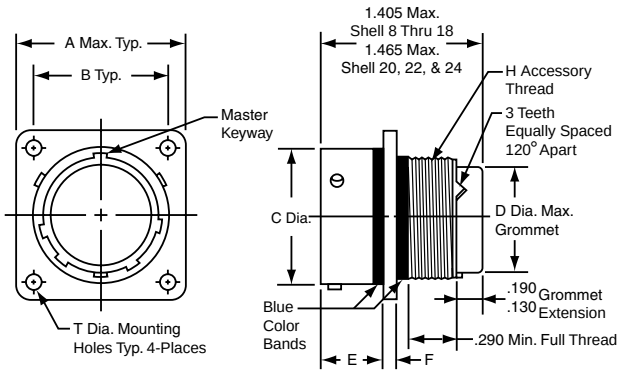

Shell Size	A Max.	B ±.005	C Dia. ±.003	D Dia. Max.	E	F ±.016	H Accessory Thread Class 2A	T Dia. ±.005
8	.828	.594	.471	.305	.462/.431	.062	.5000-20 UNF	.120
10	.954	.719	.588	.405	.462/.431	.062	.6250-24 UNEF	.120
12	1.047	.812	.748	.531	.462/.431	.062	.7500-20 UNEF	.120
14	1.141	.906	.873	.665	.462/.431	.062	.8750-20 UNEF	.120
16	1.234	.969	.998	.790	.462/.431	.062	1.0000-20 UNEF	.120
18	1.328	1.062	1.123	.869	.462/.431	.062	1.0625-18 UNEF	.120
20	1.453	1.156	1.248	.994	.587/.556	.094	1.1875-18 UNEF	.120
22	1.578	1.250	1.373	1.119	.587/.556	.094	1.3125-18 UNEF	.120
24	1.703	1.375	1.498	1.244	.620/.589	.094	1.4375-18 UNEF	.147

All dimensions for reference only.

MS3472 (MB11) – MIL-DTL-26482, Series 2
Wall Mounting Receptacle (with Wide Flange)

PART #

***To complete, see how to order page 115.**

	Connector Type	Shell Style	Service Class	Shell Size & Insert Arrg	Contact Type	Alternate Rotation of Insert	Modification Number
Military	**MS**	**3472**	X	X-X	X	X	NA
Commercial	**MB1**	**1**	X	X-X	X	X	(XXX)

MS3472
MB11

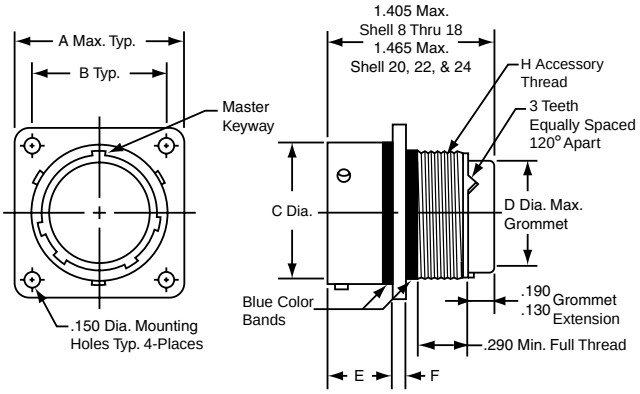

Shell Size	A Max.	B ±.005	C Dia. ±.003	D Dia. Max.	E	F ±.016	H Accessory Thread Class 2A
8	1.065	.734	.471	.305	.493/.462	.062	.5000-20 UNF
10	1.141	.812	.588	.405	.493/.462	.062	.6250-24 UNEF
12	1.266	.938	.748	.531	.493/.462	.062	.7500-20 UNEF
14	1.360	1.031	.873	.665	.493/.462	.062	.8750-20 UNEF
16	1.453	1.125	.998	.790	.493/.462	.062	1.0000-20 UNEF
18	1.532	1.203	1.123	.869	.493/.462	.062	1.0625-18 UNEF
20	1.688	1.297	1.248	.994	.587/.556	.094	1.1875-18 UNEF
22	1.766	1.375	1.373	1.119	.587/.556	.094	1.3125-18 UNEF
24	1.891	1.500	1.498	1.244	.620/.589	.094	1.4375-18 UNEF

All dimensions for reference only.

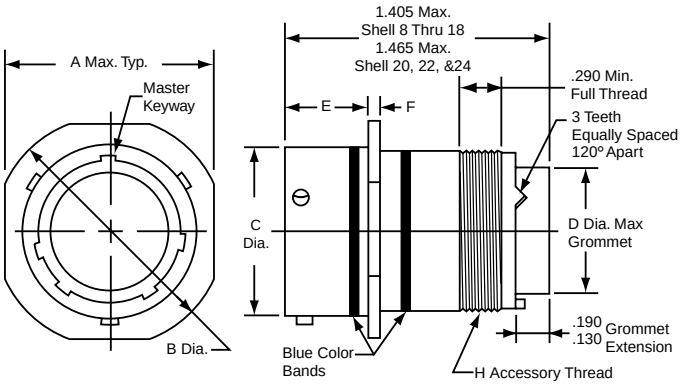

PART #

***To complete, see how to order page 115.**

	Connector Type	Shell Style	Service Class	Shell Size & Insert Arrg	Contact Type	Alternate Rotation of Insert	Modification Number
Military	**MS**	**3471**	X	X-X	X	X	NA
Commercial	**MB1**	**3**	X	X-X	X	X	(XXX)

MS3471
MB13

Shell Size	A Max.	B Dia. ±.020	C Dia. ±.003	D Dia. Max.	E	F ±.016	H Accessory Thread Class 2A
8	.828	.938	.471	.305	.462/.431	.062	.5000-20 UNF
10	.954	1.062	.588	.405	.462/.431	.062	.6250-24 UNEF
12	1.047	1.156	.748	.531	.462/.431	.062	.7500-20 UNEF
14	1.141	1.250	.873	.665	.462/.431	.062	.8750-20 UNEF
16	1.234	1.344	.998	.790	.462/.431	.062	1.0000-20 UNEF
18	1.328	1.438	1.123	.869	.462/.431	.062	1.0625-18 UNEF
20	1.453	1.562	1.248	.994	.587/.556	.094	1.1875-18 UNEF
22	1.578	1.688	1.373	1.119	.587/.556	.094	1.3125-18 UNEF
24	1.703	1.812	1.498	1.244	.620/.589	.094	1.4375-18 UNEF

All dimensions for reference only.

MS3474 (MB14) – MIL-DTL-26482, Series 2
Jam Nut Receptacle

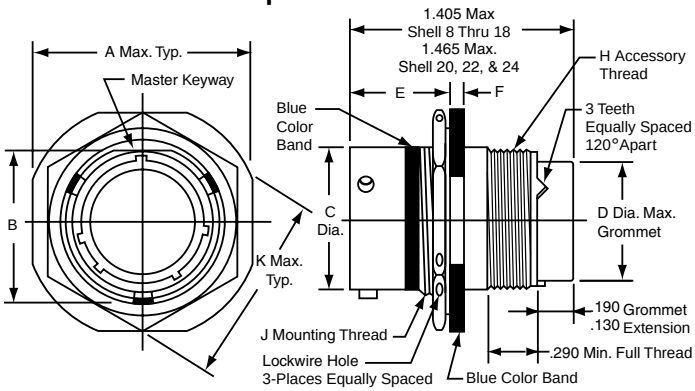

PART #

***To complete, see how to order page 115.**

	Connector Type	Shell Style	Service Class	Shell Size & Insert Arrg	Contact Type	Alternate Rotation of Insert	Modification Number
Military	**MS**	**3474**	X	X-X	X	X	NA
Commercial	**MB1**	**4**	X	X-X	X	X	(XXX)

MS3474
MB14

Shell Size	A Max.	B ±.005	C Dia. ±.003	D Dia. Max.	E	F	H Accessory Thread Class 2A	J Mounting Thread Class 2A	K Max.
8	.954	.525	.471	.305	.707/.658	.113/.086	.5000-20 UNF	.5625-24 UNEF	.767
10	1.078	.650	.588	.405	.707/.658	.113/.086	.6250-24 UNF	.6875-24 UNEF	.892
12	1.266	.813	.748	.531	.707/.658	.113/.086	.7500-20 UNEF	.8750-20 UNEF	1.079
14	1.391	.937	.873	.665	.707/.658	.113/.086	.8750-20 UNEF	1.0000-20 UNEF	1.205
16	1.516	1.061	.998	.790	.707/.658	.113/.086	1.0000-20 UNEF	1.1250-18 UNEF	1.329
18	1.641	1.186	1.123	.869	.707/.658	.113/.086	1.0625-18 UNEF	1.2500-18 UNEF	1.455
20	1.828	1.311	1.248	.994	.772/.721	.148/.096	1.1875-18 UNEF	1.3750-18 UNEF	1.579
22	1.954	1.436	1.373	1.119	.772/.721	.148/.096	1.3125-18 UNEF	1.5000-18 UNEF	1.705
24	2.078	1.561	1.498	1.244	.772/.721	.148/.096	1.4375-18 UNEF	1.6250-18 UNEF	1.829

All dimensions for reference only.

MS3476 (MB16) – MIL-DTL-26482, Series 2
Straight Plug

PART #
***To complete, see how to order page 115.**

	Connector Type	Shell Style	Service Class	Shell Size & Insert Arrg	Contact Type	Alternate Rotation of Insert	Modification Number
Military	**MS**	**3476**	X	X-X	X	X	NA
Commercial	**MB1**	**6**	X	X-X	X	X	(XXX)

MS3476
MB16

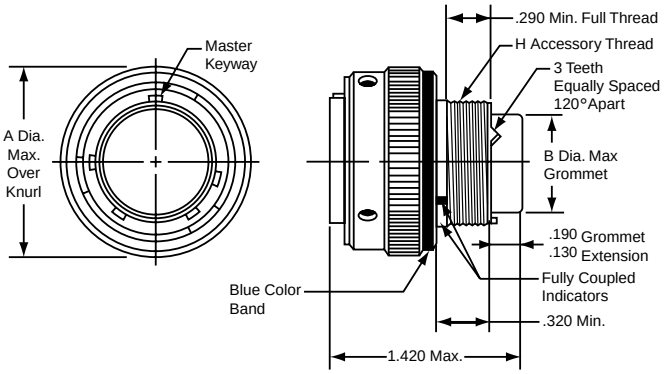

Shell Size	A Dia. Max.	B Dia. Max.	H Accessory Thread Class 2A
8	.782	.305	.5000-20 UNF
10	.926	.405	.6250-24 UNEF
12	1.043	.531	.7500-20 UNEF
14	1.183	.665	.8750-20 UNEF
16	1.305	.790	1.0000-20 UNEF
18	1.391	.869	1.0625-18 UNEF
20	1.531	.994	1.1875-18 UNEF
22	1.656	1.119	1.3125-18 UNEF
24	1.777	1.244	1.4375-18 UNEF

All dimensions for reference only.

MS3475 (MB18) – MIL-DTL-26482, Series 2
Straight Plug (With RFI Grounding Fingers)

PART #
***To complete, see how to order page 115.**

	Connector Type	Shell Style	Service Class	Shell Size & Insert Arrg	Contact Type	Alternate Rotation of Insert	Modification Number
Military	**MS**	**3475**	X	X-X	X	X	NA
Commercial	**MB1**	**8**	X	X-X	X	X	(XXX)

MS3475
MB18

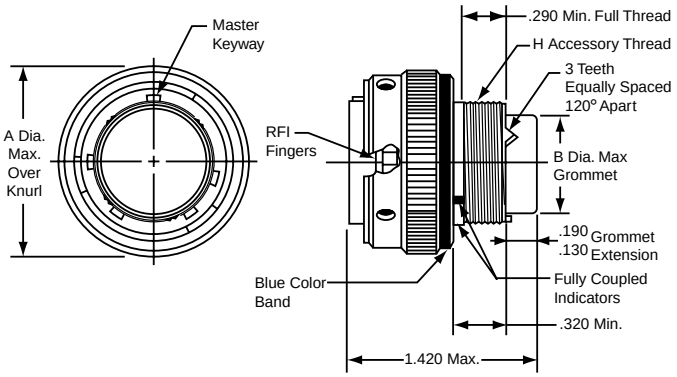

Shell Size	A Dia. Max.	B Dia. Max.	H Accessory Thread Class 2A
8	.782	.305	.5000-20 UNF
10	.926	.405	.6250-24 UNEF
12	1.043	.531	.7500-20 UNEF
14	1.183	.665	.8750-20 UNEF
16	1.305	.790	1.0000-20 UNEF
18	1.391	.869	1.0625-18 UNEF
20	1.531	.994	1.1875-18 UNEF
22	1.656	1.119	1.3125-18 UNEF
24	1.777	1.244	1.4375-18 UNEF

All dimensions for reference only.

MIL-DTL-26482, SERIES 2
CRIMP CONTACTS

Contact Size	Wire Range		Socket Contacts		Pin Contacts	
	AWG	mm2	Military Part Number	Amphenol/Matrix Part Number	Military Part Number	Amphenol/Matrix Part Number
20	24-20	0.2-0.6	M39029/5-115	M5100-001-0020L	M39029/4-110	M5000-054-0020L
16	20-16	0.5-1.4	M39029/5-116	M5100-001-0016L	M39029/4-111	M5000-054-0016L
12	14-12	2-3	M39029/5-118	M5100-001-0012L	M39029/4-113	M5000-054-0012L

CONTACT CURRENT RATING AND RETENTION

Contact Size*	DC Test Amperage	Contact Retention	
		Axial Load	
		lb.	N
20	7.5	15	66.7
16	13.0	25	111.2
12	23.0	30	133.4

* Organize individual circuits to maintain heat rise within operating temperature requirements.

SEALING PLUGS

Contact Size	Sealing Plugs	
	Military Part Number	Amphenol/Matrix Part Number
20	MS27488-20	10-405996-020
16	MS27488-16	10-405996-016
12	MS27488-12	10-405996-012

CRIMPING TOOLS

Contact Size	Wire Range		Finished Wire Dia. Range		Crimping Tool Part Number	Turret or Positioner Part Number
	AWG	mm^2	Inch	mm		
20	24-20	0.2-0.6	.040-.083	1.02-2.11	M22520/1-01 or M22520/2-01	M22520/1-02 or M22520/2-02
16	20-16	0.5-1.4	.053-.103	1.34-2.62	M22520/1-01	M22520/1-02
12	14-12	2-3	.097-.158	2.46-4.01	M22520/1-01	M22520/1-02

INSERTION/REMOVAL TOOLS

Contact Size	Color Code	Military Part Number	Amphenol/Matrix Part Number
20	Red/White	M81969/14-11	10-538988-021
16	Blue/White	M81969/14-03	10-538988-016
12	Yellow/White	M81969/14-04	10-538988-012

Note: Each connector is furnished with contacts. One spare for inserts requiring 1 to 26 of each contact, two spares for inserts with more than 26 contacts, and a minimum of one sealing plug up to 15% of the number of contacts.

Additional MIL-DTL-26482 Circular Connectors from Amphenol

MIL-DTL-26482, Series 1 Connectors

There are several additional connector types within the Amphenol® MIL-DTL-26482 family. MIL-Spec and commercial versions are available with varying design characteristics and customer options to meet cost considerations and to provide users with the most design flexibility possible.

MIL-DTL-26482, Series 1 Circular connectors are shown in detail in Amphenol Industrial Operations' catalog 12-070, which can be supplied upon request or visit www.amphenol-industrial.com.

Briefly the MIL-DTL-26482 Series 1 circulars are described as follows:

PT, SP, MS/PT
Commercial/MIL-DTL-26482, Series 1

These are bayonet type with solder contacts. Both the insert and main joint gasket are molded from resilient neoprene. This provides excellent moisture sealing at the gasket and superior electrical isolation of the contact in the inserts.

Socket contacts are closed entry design. Printed circuit board contacts are also available in this series.

The SP is a modification of the PT providing special shells with a wide mounting flange for back panel mounting. The SP also has a durable non-conductive hard anodic "Alumilite" coating which provides abrasion and corrosion protection.

There are 8 shell styles in the PT, SP and MS/PT series, and shell sizes are 6-24. The PT solder is UL recognized. Hermetics are also available.

PT-SE, SP-SE, MS/PT-SE
Commercial/MIL-DTL-26482, Series 1

These are a derivative of the PT line, bayonet type. However, they incorporate crimp contacts that are rear insertable, front releasable. An MS approved spring tower retention system holds the contacts in place.

PT-CE, SP-CE
Commercial crimp type

Another derivative of the PT line, bayonet type. These also have crimp contacts that are rear insertable, front releasable, but the contacts are held in place by a nylon wafer retention system. The voidless one-piece insert and grommet assembly provide continuous dielectric separation between contacts.

PC, PC-SE, PC-CE
Commercial solder and crimp type

The PC series within the Amphenol® miniature circular family is threaded coupling, rather than bayonet coupling. The threads are double-stubbed so they can not be cross threaded.

The PC is offered with solder contacts. The PC-SE has crimp contacts in a spring tower retention system, while the PC-CE has crimp contacts in a nylon wafer retention system. Hermetics are available

All miniature circular are intermateable and intermountable with each other except for the threaded coupling PC Series.

For further information ask for catalog 12-070. Consult Amphenol Industrial Operations, Sidney, NY for any assistance on these products or for any specific application needs. See catalog 12-070 online at www.amphenol-industrial.com

Amphenol
MIL-DTL-83723, Series III, Matrix®

TABLE OF CONTENTS

MIL-DTL-83723, Series III, Matrix®

- Table of Contents 121
- Wide Variety of Coupling Styles & Options 122
- Class Descriptions, Performance Specifications, Quick Reference Chart 123
- Insert Availability and Identification, Alternate Keying Positions, Alternate Rotations 124
- Insert Arrangement Drawings 125, 126

Bayonet Shell Styles:

- How to Order (Military & Commercial). 127
- Wall Mounting Receptacle M83723/71 & /72 (MB30), Jam Nut Receptacle M83723/73 & /74 (MB34) 128
- Straight Plug M83723/75 & /76 (MB36), Straight Plug with RFI Grounding Fingers M83723/77 & /78 (MB38). . 129

Threaded Shell Styles:

- How to Order (Military & Commercial). 130
- Wall Mounting Receptacle M83723/82 & /83 (MT30), Jam Nut Receptacle M83723/84 & /85 (MT34) 131
- Straight Plug M83723/86 & /87 (MT36), Straight Plug with RFI Grounding Fingers M83723/91 & /92 (MT38). . 132
- Straight Plug (Self-locking) M83723/95 & /96 (MT37). 133

Quick-Disconnect Shell Styles:

- How to Order (Military & Commercial). 134
- Quick-Disconnect Plug M83723/66 & /67 (MQ36), Quick-Disconnect Plug with Lanyard M83723/68 & /69 (MQ35/MQ38), Receptacle Adapter 135

Contact Information, Sealing Plugs:

- Crimp and Insertion/Removal Tools. 136

MIL-DTL-83723 Series III, Matrix® Typical Markets:

- Military & Commercial Aviation
  - High Temperature Applications
- Military Vehicles

Amphenol Aerospace

MIL-DTL-83723, Series III, Matrix®

With a Wide Variety of Coupling Styles & Options

Amphenol Aerospace offers the Matrix® Product line of MIL-DTL-83723*, Series III Connectors.

This series provides many choices within the range of a medium sized, environmentally resistant circular connector. With three coupling style choices - bayonet, threaded and quick-disconnect - the versatility of this family makes it increasingly popular for panel mount, box mount and line-to-line applications in aircraft. For general duty environmentally resistant requirements, this family of connectors provides a wide range of interconnection solutions.

MIL-DTL-83723, SERIES III CONNECTORS WITH BAYONET COUPLING

M83723/71 & 72
wall mounting receptacle

M83723/73 & 74
jam nut receptacle

M83723/75 & 76
straight plug

M83723/77 & 78
straight plug, RFI grounding

- **Quick positive coupling assured by 3 point bayonet coupling system; visual confirmation of complete coupling**
- **Five key/keyway design eliminates mismating**
- **Shell sizes 8 – 24**
- **Intermateable with most MIL-DTL-26500 bayonet coupling connectors**

MIL-DTL-83723, SERIES III CONNECTORS WITH THREADED COUPLING

M83723/82 & 83
wall mounting receptacle

M83723/84 & 85
jam nut receptacle

M83723/86 & 87
straight plug

M83723/91 & 92
straight plug, RFI grounding

M83723/95 & 96
straight plug, self-locking

- **Threaded coupling offers greater resistance to decoupling with a visual full mating indicator band on the shell**
- **Shell sizes 8 – 28**
- **Intermateable with most MIL-DTL-26500 threaded coupling connectors**

DESIGN CHARACTERISTICS

- Recommended operating voltage to 600 VAC (RMS) at sea level
- Complete environmental sealing includes individual contact seals and a silicone elastomer interfacial seal with raised barriers around each pin, a shell-to-shell seal and an insert-to-shell seal. Sealing over a wide range of wire diameters is assured by a triple-webbed grommet design
- Captive coupling nut prevents tampering, while a reduced coupling ring ramp allows easier mating
- Incorporates crimp rear release contacts in sizes 12, 16 and 20; contact arrangements accept 2 to 61 circuits
- Contacts conform to SAE AS39029** and use standard qualified rear-release type plastic tools
- Insertion and removal of contacts from the rear of the connector assures no damage to the front that might affect the sealing characteristics
- Grommets are constructed of tear-resistant elastomer and experience no degradation when exposed to a broad range of fluids
- Closed entry socket side of the insert is designed with a lead-in chamfer and a hard face that will accept a pin contact bent within pre-established limits
- MS and Commercial versions available
- Alternate positioning available
- Aluminum shells with black anodized, cadmium or electroless nickel finish options; passivated stainless steel shells are also available

**SAE AS39029 supersedes MIL-DTL-39029

MIL-DTL-83723, SERIES III CONNECTORS WITH QUICK DISCONNECT COUPLING

M83723/66 & 67
quick disconnect plug

M83723/68 & 69
quick disconnect plug with lanyard

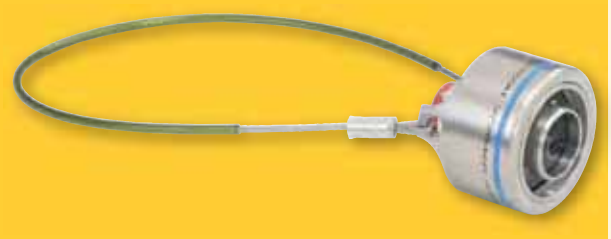

- **Push-Pull, quick disconnect coupling is available in a straight plug that can be ordered with or without a lanyard release mechanism**

* MIL-DTL-83723 supersedes MIL-C-83723. Pyle-National Series of MIL-DTL-83723 is also offered by Amphenol.; see 83723 Pyle section of this catalog.

MIL-DTL-83723, Series III, Matrix®

Class Descriptions, Performance Specifications, Quick Reference Chart

Amphenol Aerospace

CLASS DESCRIPTIONS

Military MIL-DTL-83723, Series III	Amphenol®/ Matrix® Commercial MB Series	Connector Style	Description
Class A	Class A	Bayonet, Threaded or Quick-Disconnect	Aluminum shell, black non-conductive anodize finish, fluid resistant
Class R	Class R	Bayonet, Threaded or Quick-Disconnect	Aluminum shell, electroless nickel finish, fluid resistant
Class G	Class G	Bayonet, Threaded or Quick-Disconnect	Stainless steel shell, passivated, fluid resistant
Class W	Class W	Bayonet, Threaded or Quick-Disconnect	Aluminum shell, cadmium olive drab finish, corrosion/ fluid resistant

For Classes K, S and N see the Amphenol/Pyle high temperature versions of MIL-DTL-83723,Series III in the 83723 Pyle section of this catalog.

PERFORMANCE SPECIFICATIONS

SERVICE RATINGS

Service Rating	Recommended Operating AC Voltage at Sea Level	Test Voltage AC (RMS), 60 cps			
		Sea Level	50,000 ft.	70,000 ft.	110,000 ft.
I	600	1,500	500	375	200

Please note that the electrical data given is not an establishment of electrical safety factors. This is left entirely in the designer's hands as he can best determine which peak voltage, switching surges, transients, etc. can be expected in a particular circuit.

OPERATING TEMPERATURE RANGE

Classes A, G and R: –65°C (–85°F) to 200°C (392°F)
Class W: –65°C to 175°C

ENVIRONMENTAL SEAL

Wired, mated connectors with the specified accessory attached will meet the altitude immersion test specified in MIL-DTL-83723.

DURABILITY

Minimum of 500 mating cycles.

SHOCK AND VIBRATION REQUIREMENTS

Wired, mated connectors shall not be damaged, nor shall there be a current interruption longer than one microsecond when subjected to the following:

SHOCK: One shock in each of the three major axes, having a 100g peak for a six millisecond duration (half-sine pulse).

VIBRATION: Twelve hours of random vibration having a range of 10 to 2,000 Hz with a .06 inch double amplitude (10-55 Hz) and a 20g peak level (55-2,000 Hz).

The following is a quick reference chart for use in determining either the military designation or the commercial Amphenol®/ Matrix® designation number of MIL-DTL-83723 connectors. See also the how to order pages for complete part number breakdowns.

Connector Style	MIL-DTL-83723 Military Designation	Amphenol®/ Matrix® Commercial Designation	Contact Type
BAYONET COUPLING			
Square flange wall mount receptacle	M83723/71	MB30( )S	Socket
Square flange wall mount receptacle	M83723/72	MB30( )P	Pin
Single hole mount jam nut receptacle	M83723/73	MB34( )S	Socket
Single hole mount jam nut receptacle	M83723/74	MB34( )P	Pin
Standard straight plug	M83723/75	MB36( )S	Socket
Standard straight plug	M83723/76	MB36( )P	Pin
Straight plug with RFI grounding fingers	M83723/77	MB38( )S	Socket
Straight plug with RFI grounding fingers	M83723/78	MB38( )P	Pin
THREADED COUPLING			
Square flange wall mount receptacle	M83723/82	MT30( )S	Socket
Square flange wall mount receptacle	M83723/83	MT30( )P	Pin
Single hole mount jam nut receptacle	M83723/84	MT34( )S	Socket
Single hole mount jam nut receptacle	M83723/85	MT34( )P	Pin
Standard straight plug	M83723/86	MT36( )S	Socket
Standard straight plug	M83723/87	MT36( )P	Pin
Straight plug with RFI grounding fingers	M83723/91	MT38( )S	Socket
Straight plug with RFI grounding fingers	M83723/92	MT38( )P	Pin
Straight plug with self-locking clutch plate	M83723/95	MT37( )S	Socket
Straight plug with self-locking clutch plate	M83723/96	MT37( )P	Pin
QUICK-DISCONNECT PUSH-PULL COUPLING			
Straight plug without lanyard	M83723/66	MQ36( )P	Pin
Straight plug without lanyard	M83723/67	MQ36( )S	Socket
Straight plug with lanyard	M83723/68	MQ35( )P	Pin
Straight plug with lanyard	M83723/69	MQ35( )S	Socket

MIL-DTL-83723, Series III, Matrix®

Insert Availability and Identification, Alternate Keying Positions, Alternate Rotations

INSERT ARRANGEMENTS

Shell Size/ Insert Arrangement	Service Rating	Total Contacts	Contact Size		
			12	16	20
0803	I	3			3
0898	I	3			3
1002	I	2			2
1005	I	5			5
1006	I	6			6
1020	I	2		2	
1203	I	3		3	
1212	I	12			12
1404	I	4	4		
1407	I	7		7	
1412	I	12		3	9
1415	I	15			15
1610	I	10		10	
1624	I	24			24
1808	I	8	8		
1814	I	14		14	
1831	I	31			31
2016	I	16		16	
2025	I	25	6		19
2028	I	28	4		24
2039	I	39		2	37
2041	I	41			41
2212	I	12	12		
2219	I	19		19	
2232	I	32	6		26
2239*	I	39		12	27
2255	I	55			55
2429†		29		29	
2430†		30		30	
2443	I	43		20	23
2457	I	57	2		55
2461	I	61			61
2841†		41		41	
2842†		42		42	

† Not an MS layout.
Connectors with these insert arrangements should be ordered by commercial part number only.

Shell size 28 is available in threaded coupling connectors only.

* Consult Amphenol Aerospace for availability of arrangement 22-39.

See how to order for bayonet type connectors on page 127, how to order for threaded on page 130, and how to order for quick-disconnect type connectors on page 134.

Insert arrangements are per MIL-STD-1554.

ALTERNATE KEYING POSITIONS (Rotation of key/keyway of shell)

To avoid cross-plugging problems in applications requiring the use of more than one connector of the same size and arrangement, alternate keying positions are available as indicated in the chart below. The diagram shows the engaging view of a receptacle shell with keyways. Plug shells would be the opposite of this diagram.

In the "alternate keying positions" (positions 6, 7, 8, 9 and Y), the minor keys/keyways are positioned with reference to master key/keyway as indicated in the keying position table.

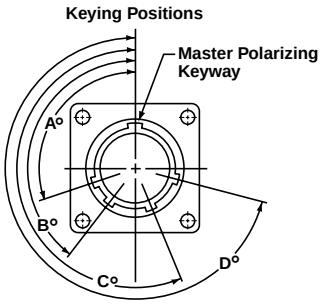

Shown is Engaging Face View of Receptacle Shell with Keyways (Plug Shell Keys would be Opposite)

ALTERNATE KEYING POSITIONS OF SHELL

Shell Size	Polarizing Position	Key/Keyway Positions			
		A°	B°	C°	D°
8 thru 24	N	105	140	215	265
8 & 10	6	102	132	248	320
	7	80	118	230	312
	8	35	140	205	275
	9	64	155	234	304
10 only	Y*	25	115	220	270
12, 14, 16, 18, 20, 22, 24 and 28	6	18	149	192	259
	7	92	152	222	342
	8	84	152	204	334
	9	24	135	199	240
	Y*	98	152	268	338

* Position Y supersedes inactive positions 10 and Z designations. Ref. MIL-STD-1554.

ALTERNATE ROTATIONS (Rotation of insert)

Alternate positioning is also available with the rotation of the insert. The diagram shows the pin insert mating face. The center-line of the shell in the normal insert position (position N) coincides with the center-line of the master key/keyway in the shell. In alternate rotations, (positions 1, 2, 3, 4 and 5), the insert rotates relative to the center-line of the key/keyway of the shell. See E° call out on diagram and the table. The socket insert is rotated clockwise, and the pin insert is rotated counter-clockwise.

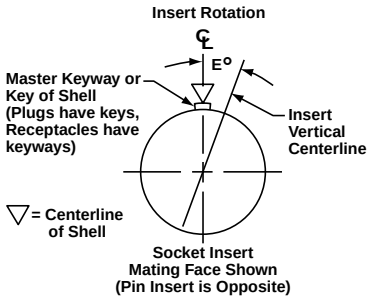

ALTERNATE ROTATIONS OF INSERT

Shell Size	Polarizing Position	Insert Position E°
8 & 10	N	0
	1	10
	2	20
	3	30
	4	40
	5	50
12, 14, 16, 18, 20, 22, 24 and 28	N	0
	1	10
	2	20
	3	30
	4	40
	5	50

Note: Positions 1-5 are inactive for new designs per MIL-STD-1554.

Amphenol Aerospace

Front Face of Pin Insert or Rear Face of Socket Insert Illustrated

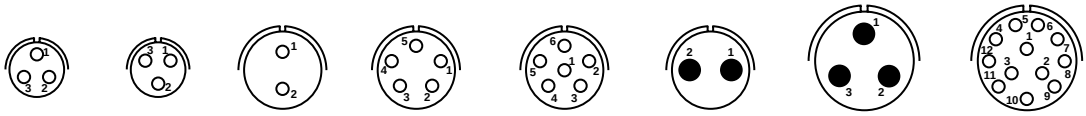

Insert Arrangement	0803	0898	1002	1005	1006	1020	1203	1212
Service Rating	I	I	I	I	I	I	I	I
Number of Contacts	3	3	2	5	6	2	3	12
Contact Size	20	20	20	20	20	16	16	20

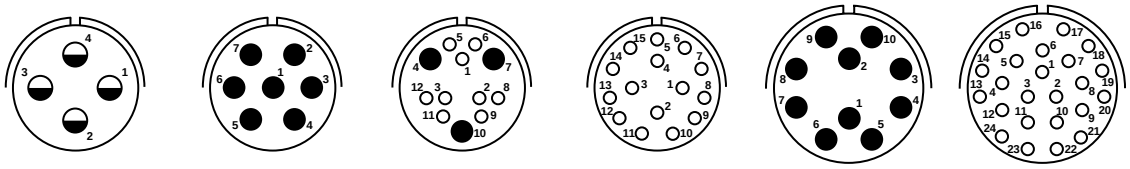

Insert Arrangement	1404	1407	1412	1415	1610	1624
Service Rating	I	I	I	I	I	I
Number of Contacts	4	7	9 3	15	10	24
Contact Size	12	16	20 16	20	16	20

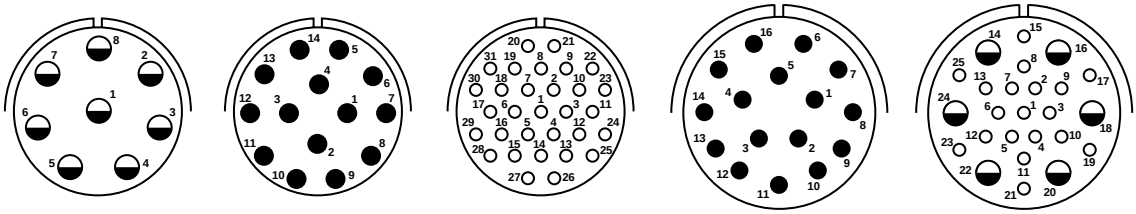

Insert Arrangement	1808	1814	1831	2016	2025
Service Rating	I	I	I	I	I
Number of Contacts	8	14	31	16	19 6
Contact Size	12	16	20	16	20 12

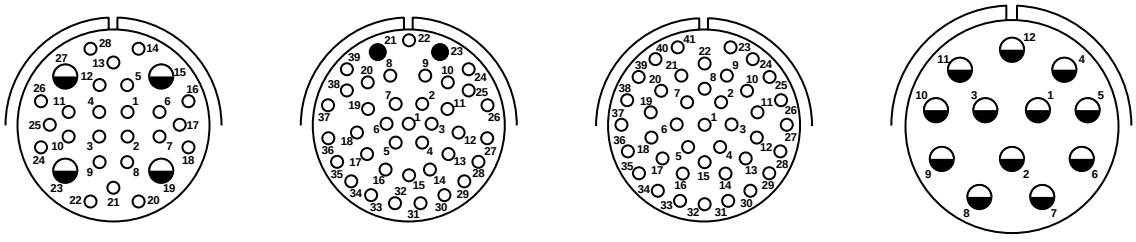

Insert Arrangement	2028	2039	2041	2212
Service Rating	I	I	I	I
Number of Contacts	24 4	37 2	41	12
Contact Size	20 12	20 16	20	12

NOTE: Connectors sold as mil-spec connectors will have mil-spec markings on the insert (a "snail-trail" designating the numerical path). Commercial versions will have insert markings as shown here.

CONTACT LEGEND ○ 20 ● 16 ◒ 12

Front Face of Pin Insert or Rear Face of Socket Insert Illustrated

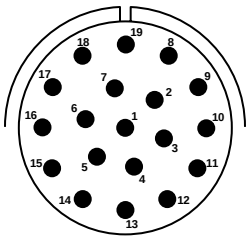

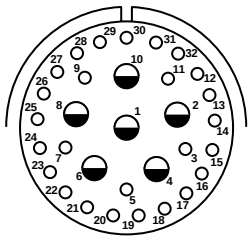

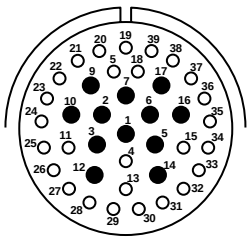

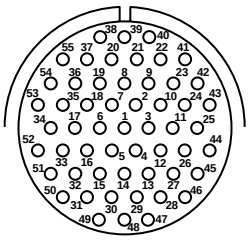

Insert Arrangement	2219	2232	2239*	2255
Service Rating	I	I	I	I
Number of Contacts	19	26 6	27 12	55
Contact Size	16	20 12	20 16	20

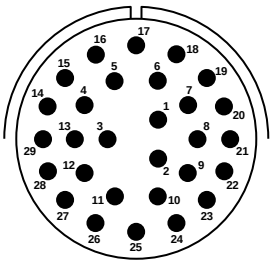

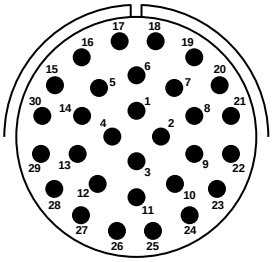

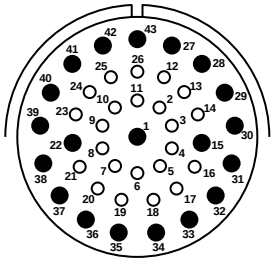

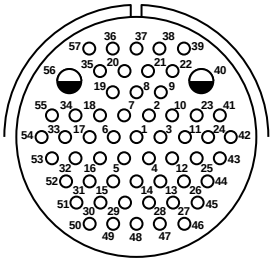

Insert Arrangement	2429†	2430†	2443	2457
Service Rating			I	I
Number of Contacts	29	30	23 20	55 2
Contact Size	16	16	20 16	20 12

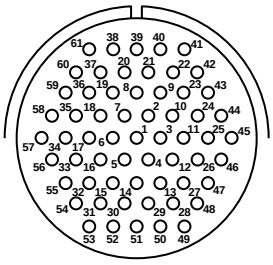

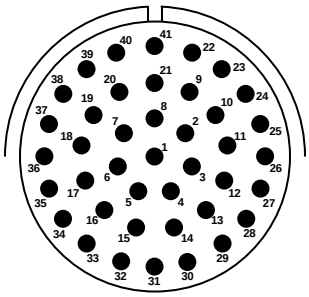

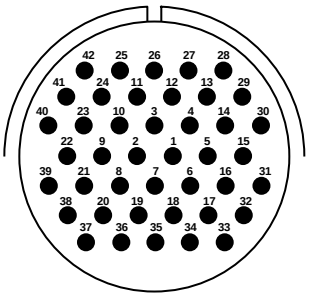

Insert Arrangement	2461	2841†	2842†
Service Rating	I		
Number of Contacts	61	41	42
Contact Size	20	16	16

†Not a MS layout.
Connectors with these insert arrangements can be ordered by commercial part number only.

Shell size 28 is available in threaded coupling connectors only.

* Consult Amphenol Aerospace for availability of arrangement 22-39.

See how to order for bayonet type connectors on page 127, how to order for threaded on page 130, and how to order for quick-disconnect type connectors on page 134.

NOTE: Connectors sold as mil-spec connectors will have mil-spec markings on the insert (a “snail-trail” designating the numerical path).
Commercial versions will have insert markings as shown here.

CONTACT LEGEND	20	16	12

MIL-DTL-83723, Series III, Matrix®

How to Order – Bayonet Coupling Connectors

	1.	2.	3.	4.	5.
MIL-DTL-83723, Series III	Connector Type	Connector Style (Bayonet) and Contact Type	Service Class	Shell Size/ Insert Arrangement	Alternate Keying Position of Shell or Alternate Rotation of Insert
MILITARY	M83723	/74	R	1203	7

	1.	2.	3.	4.	5.	6.	7.
Amphenol® Matrix® MIL-DTL-83723, Series III	Connector Type (Bayonet)	Connector Style	Service Class	Shell Size/ Insert Arrangement	Contact Type	Alternate Keying Position of Shell or Alternate Rotation of Insert	Modification Number
COMMERCIAL	MB	34	R	1203	P	7	XXX

Step 1. Military Connector Type

M83723	Designates MIL-DTL-83723 Series III Connectors

Step 2. Select a Connector Style

(Refer to military specification slash sheet number.) Bayonet coupling connectors are designated by numbers /71 -/78 as follows:

	Designates
/71	Wall Mount Receptacle with Socket Contacts
/72	Wall Mount Receptacle with Pin Contacts
/73	Jam Nut Receptacle with Socket Contacts
/74	Jam Nut Receptacle with Pin Contacts
/75	Standard Straight Plug with Socket Contacts
/76	Standard Straight Plug with Pin Contacts
/77	Straight Plug with RFI grounding, Socket Contacts
/78	Straight Plug with RFI grounding, Pin Contacts

Step 3. Select a Service Class

	Designates
A	Aluminum shell, black non-conductive anodize finish, fluid resistant insert
R	Aluminum shell, electroless nickel finish, fluid resistant insert
G	Stainless steel shell, passivated, fluid resistant insert
W	Aluminum shell, olive drab cadmium plated, fluid resistant insert

Note: Consult Amphenol Aerospace for hermetic classes H and Y availability.

Step 4. Select a Shell Size & Insert Arrangement from chart on pg. 124.

Shell Size & Insert Arrangements are on page 124. First number represents Shell Size, second number is the Insert Arrangement.

Step 5. Select an Alternate Keying Position - Rotation of master key/keyway of shell.

Use N for normal. Use 6, 7, 8, 9 or Y for alternate keying positions. See page 124 for descriptions.

or Step 5. Select an Alternate Rotation of Insert.

Use N for normal. Use 1, 2, 3, 4, or 5 for alternate rotation of insert. See page 124 for descriptions.

For ordering information on accessories, such as protection caps and backshell hardware, contact Amphenol Aerospace, Sidney, NY.

Step 1. Commercial Connector Type

MB	Designates Amphenol®/Matrix® Bayonet Coupling Connectors

Step 2. Select a Connector Style

	Designates
30	Wall Mount Receptacle
34	Jam Mount Receptacle
36	Standard Straight Plug
38	Straight Plug with RFI grounding fingers

Step 3. Select a Service Class

	Designates
A	Aluminum shell, black non-conductive anodize finish, fluid resistant insert
R	Aluminum shell, electroless nickel finish, fluid resistant insert
G	Stainless steel shell, passivated, fluid resistant insert
W	Aluminum shell, cadmium olive drab finish, corrosion resistant, fluid resistant insert

Note: Consult Amphenol Aerospace for hermetic classes H and Y availability.

Step 4. Select a Shell Size & Insert Arrangement from chart on page 124.

Shell Size & Insert Arrangements are on page 124. First number represents Shell Size, second number is the Insert Arrangement.

Step 5. Select a Contact Type

	Designates
P	Pin Contacts
S	Socket Contacts

Step 6. Select an Alternate Keying Position - Rotation of master key/keyway of shell.

Use 6, 7, 8, 9 or Y for alternate keying positions. No letter required for normal (No rotation position). See page 124 for descriptions.

or Step 6. Select an Alternate Rotation of Insert.

Use 1, 2, 3, 4, or 5 for alternate rotation of insert. No letter required for normal (No rotation position).
See page 124 for descriptions.

Step 7. Modification Number

Consult Amphenol Aerospace, Sidney, NY for information.

M83723/71 & /72 – MIL-DTL-83723, Series III

Wall Mounting Receptacle with Bayonet Coupling

PART

To complete, see how to order page 127.

	Connector Type	Connector Style (Bayonet) and Contact Type	Service Class	Shell Size & Insert Arrg	Alt. Keying Position or Alt. Rotation
Military	**M83723**	**/71 (with socket contacts)**	X	X-X	X
Military	**M83723**	**/72 (with pin contacts)**	X	X-X	X

	Connector Type (Bayonet)	Connector Style	Service Class	Shell Size & Insert Arrg	Contact Type	Alt. Keying Position or Alt. Rotation	Modification Number
Commercial	**MB**	**30**	X	X-X	X	X	XXX

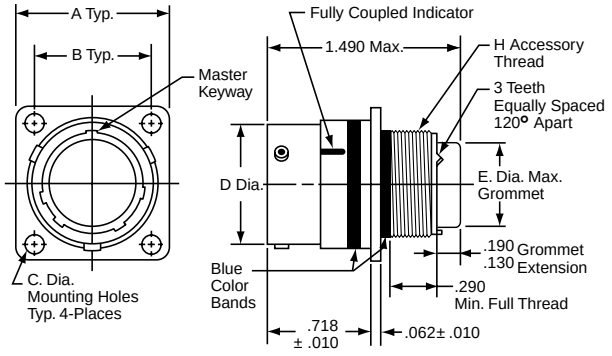

Shell Size	A ±.005	B ±.005	C Dia. ±.005	D Dia.	E Dia.	H Accessory Thread Class 2A
8	.812	.594	.120	.536/.531	.305	.5000-20 UNF
10	.937	.719	.120	.659/.654	.405	.6250-24 UNEF
12	1.031	.812	.120	.829/.824	.531	.7500-20 UNEF
14	1.125	.906	.120	.898/.893	.665	.8750-20 UNEF
16	1.250	.969	.120	1.025/1.020	.790	1.0000-20 UNEF
18	1.343	1.062	.120	1.131/1.126	.869	1.0625-18 UNEF
20	1.437	1.156	.120	1.256/1.251	.994	1.1875-18 UNEF
22	1.562	1.250	.120	1.381/1.376	1.119	1.3125-18 UNEF
24	1.703	1.375	.149	1.506/1.501	1.244	1.4375-18 UNEF

All dimensions for reference only.

M83723/73 & /74 – MIL-DTL-83723, Series III

Jam Nut Receptacle with Bayonet Coupling

PART

To complete, see how to order page 127.

	Connector Type	Connector Style (Bayonet) and Contact Type	Service Class	Shell Size & Insert Arrg	Alt. Keying Position or Alt. Rotation
Military	**M83723**	**/73 (with socket contacts)**	X	X-X	X
Military	**M83723**	**/74 (with pin contacts)**	X	X-X	X

	Connector Type (Bayonet)	Connector Style	Service Class	Shell Size & Insert Arrg	Contact Type	Alt. Keying Position or Alt. Rotation	Modification Number
Commercial	**MB**	**34**	X	X-X	X	X	XXX

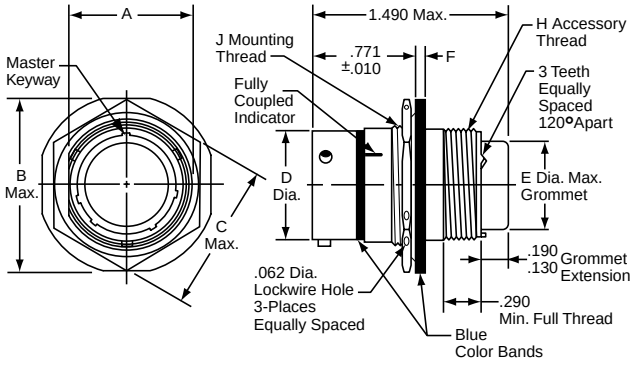

Shell Size	A	B Max.	C Max.	D Dia.	E Dia. Max.	F	H Accessory Thread Class 2A	J Mounting Thread Class 2A
8	.596/.590	.979	.829	.536/.531	.305	.137/.097	.5000-20 UNF	.6250-20 UN
10	.721/.715	1.104	.954	.659/.654	.405	.137/.097	.6250-24 UNEF	.7500-20 UNEF
12	.908/.902	1.291	1.142	.829/.824	.531	.113/.097	.7500-20 UNEF	.9375-20 UNEF
14	.971/.965	1.391	1.205	.898/.893	.665	.137/.097	.8750-20 UNEF	1.0000-20 UNEF
16	1.096/1.090	1.516	1.329	1.025/1.020	.790	.137/.097	1.0000-20 UNEF	1.1250-20 UN
18	1.220/1.214	1.641	1.455	1.131/1.126	.869	.137/.097	1.0625-18 UNEF	1.2500-18 UNEF
20	1.345/1.339	1.766	1.579	1.256/1.251	.994	.137/.097	1.1875-18 UNEF	1.3750-18 UNEF
22	1.470/1.464	1.954	1.705	1.381/1.376	1.119	.169/.128	1.3125-18 UNEF	1.5000-20 UNEF
24	1.595/1.589	2.079	1.829	1.506/1.501	1.244	.168/.128	1.4375-18 UNEF	1.6250-18 UNEF

All dimensions for reference only.

M83723/75 & /76– MIL-DTL-83723, Series III

Straight Plug with Bayonet Coupling

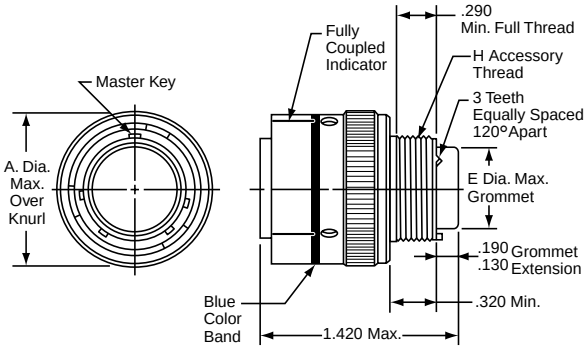

PART

To complete, see how to order page 127.

	Connector Type	Connector Style (Bayonet) and Contact Type	Service Class	Shell Size & Insert Arrg	Alt. Keying Position or Alt. Rotation
Military	**M83723**	**/75 (with socket contacts)**	X	X-X	X
Military	**M83723**	**/76 (with pin contacts)**	X	X-X	X

	Connector Type (Bayonet)	Connector Style	Service Class	Shell Size & Insert Arrg	Contact Type	Alt. Keying Position or Alt. Rotation	Modification Number
Commercial	**MB**	**36**	X	X-X	X	X	XXX

Shell Size	A Dia. Max.	E Dia. Max.	H Accessory Thread Class 2A
8	.776	.305	.5000-20 UNF
10	.906	.405	.6250-24 UNEF
12	1.078	.531	.7500-20 UNEF
14	1.141	.665	.8750-20 UNEF
16	1.266	.790	1.0000-20 UNEF
18	1.375	.869	1.0625-18 UNEF
20	1.510	.994	1.1875-18 UNEF
22	1.625	1.119	1.3125-18 UNEF
24	1.760	1.244	1.4375-18 UNEF

All dimensions for reference only.

M83723/77 & /78 – MIL-DTL-83723, Series III

Straight Plug, Bayonet Coupling (with RFI grounding fingers)

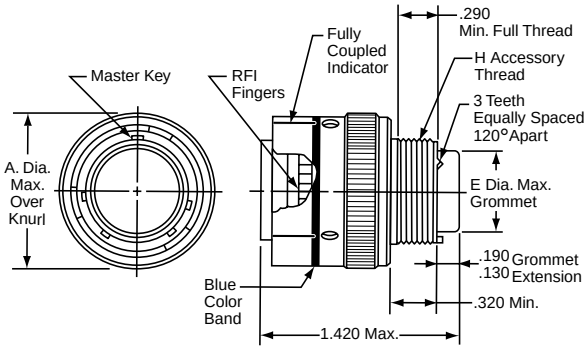

PART

To complete, see how to order page 127.

	Connector Type	Connector Style (Bayonet) and Contact Type	Service Class	Shell Size & Insert Arrg	Alt. Keying Position or Alt. Rotation
Military	**M83723**	**/77 (with socket contacts)**	X	X-X	X
Military	**M83723**	**/78 (with pin contacts)**	X	X-X	X

	Connector Type (Bayonet)	Connector Style	Service Class	Shell Size & Insert Arrg	Contact Type	Alt. Keying Position or Alt. Rotation	Modification Number
Commercial	**MB**	**38**	X	X-X	X	X	XXX

Shell Size	A Dia. Max.	E Dia. Max.	H Accessory Thread Class 2A
8	.776	.305	.5000-20 UNF
10	.906	.405	.6250-24 UNEF
12	1.078	.531	.7500-20 UNEF
14	1.141	.665	.8750-20 UNEF
16	1.266	.790	1.0000-20 UNEF
18	1.375	.869	1.0625-18 UNEF
20	1.510	.994	1.1875-18 UNEF
22	1.625	1.119	1.3125-18 UNEF
24	1.760	1.244	1.4375-18 UNEF

All dimensions for reference only.

1. MIL-DTL-83723, Series III	2. Connector Type	3. Connector Style (Threaded) and Contact Type)	4. Service Class	5. Shell Size/ Insert Arrangement	Alternate Keying Position of Shell or Alternate Rotation of Insert
MILITARY	M83723	/84	R	803	N

1. Amphenol®/Matrix® MIL-DTL-83723, Series III	2. Connector Type (Threaded)	3. Connector Style	4. Service Class	5. Shell Size/ Insert Arrangement	6. Contact Type	7. Alternate Keying Position of Shell or Alternate Rotation of Insert	Modification Number
COMMERCIAL	MT	34	R	0803	P	7	XXX

Step 1. Military Connector Type

M83723	Designates MIL-DTL-83723 Series III Connectors

Step 2. Select a Connector Style

(Refer to military specification slash sheet number).

	Designates
/82	Wall Mount Receptacle with Socket Contacts
/83	Wall Mount Receptacle with Pin Contacts
/84	Jam Nut Receptacle with Socket Contacts
/85	Jam Nut Receptacle with Pin Contacts
/86	Standard Straight Plug with Socket Contacts
/87	Standard Straight Plug with Pin Contacts
/91	Straight Plug with RFI grounding, Socket Contacts
/92	Straight Plug with RFI grounding, Pin Contacts
/95	Straight Plug with Self-Locking Clutch Plate, Socket Contacts
/96	Straight Plug with Self-Locking Clutch Plate, Pin Contacts

Step 3. Select a Service Class

	Designates
A	Aluminum shell, black non-conductive anodize finish, fluid resistant insert
R	Aluminum shell, electroless nickel finish, fluid resistant insert
G	Stainless steel shell, passivated, fluid resistant insert
W	Aluminum shell, olive drab cadmium plated, fluid resistant insert

See additional classes of MIL-DTL-83723, Series III which are available in the Amphenol/Pyle versions: Classes K, S, N - firewall, high temperature (200°C – 260°C) and Classes H and Y - hermetics. These are covered in the 83723 Pyle section of this catalog.

Step 4. Select a Shell Size & Insert Arrangement from chart on pg. 124.

Shell Size & Insert Arrangements are on page 124. First number represents Shell Size, second number is the Insert Arrangement. (Note that shell size 28 is not an MS connector, and should be ordered by commercial number.)

Step 5. Select an Alternate Keying Position - Rotation of master key/keyway of shell.

Use N for normal. Use 6, 7, 8, 9 or Y for alternate keying positions. See page 124 for descriptions.

or Step 5. Select an Alternate Rotation of Insert.

Use N for Normal. Use 1, 2, 3, 4, or 5 for alternate rotation of insert. See page 124 for descriptions.

For ordering information on accessories, such as protection caps and backshell hardware, contact Amphenol Aerospace, Sidney, NY.

Step 1. Commercial Connector Type

MT	Designates Amphenol®/Matrix® Threaded Coupling Connector

Step 2. Select a Connector Style

	Designates
30	Wall Mount Receptacle
34	Jam Mount Receptacle
36	Standard Straight Plug
38	Straight Plug with RFI grounding fingers
37	Straight Plug with Self-Locking Clutch Plate

Step 3. Select a Service Class

	Designates
A	Aluminum shell, black non-conductive anodize finish, fluid resistant insert
R	Aluminum shell, electroless nickel finish, fluid resistant insert
G	Stainless steel shell, passivated, fluid resistant insert
W	Aluminum shell, cadmium olive drab finish, corrosion resistant, fluid resistant insert

See additional classes of MIL-DTL-83723, Series III which are available in the Amphenol/Pyle versions: Classes K, S, N - firewall, high temperature (200°C – 260°C) and Classes H and Y - hermetics. These are covered in the 83723 Pyle section of this catalog.

Step 4. Select a Shell Size & Insert Arrangement from chart on pg. 124.

Shell Size & Insert Arrangements are on page 124. First number represents Shell Size, second number is the Insert Arrangement.

Step 5. Select a Contact Type

	Designates
P	Pin Contacts
S	Socket Contacts

Step 6. Select an Alternate Keying Position - Rotation of master key/keyway of shell.

Use 6, 7, 8, 9 or Y for alternate keying positions. No letter required for normal (No rotation position). See page 124 for descriptions.

or Step 6. Select an Alternate Rotation of Insert.

Use 1, 2, 3, 4, or 5 for alternate rotation of insert.
No letter required for normal (No rotation position)
See page 124 for descriptions.

Step 7. Modification Number

Consult Amphenol Aerospace for information.

M83723/82 & /83 – MIL-DTL-83723, Series III

Wall Mounting Receptacle with Threaded Coupling

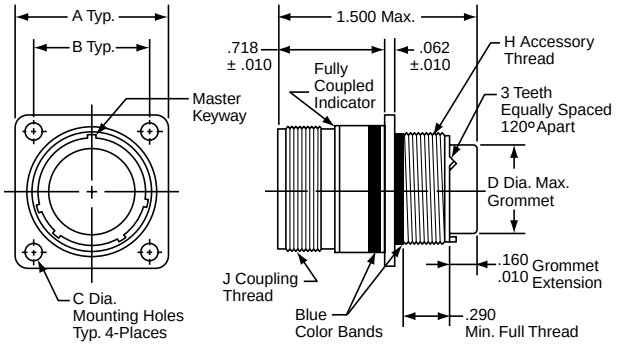

PART

To complete, see how to order page 130.

	Connector Type	Connector Style (Threaded) and Contact Type	Service Class	Shell Size & Insert Arrg	Alt. Keying Position or Alt. Rotation
Military	**M83723**	**/82 (with socket contacts)**	X	X-X	X
Military	**M83723**	**/83 (with pin contacts)**	X	X-X	X

	Connector Type (Threaded)	Connector Style	Service Class	Shell Size & Insert Arrg	Contact Type	Alt. Keying Position or Alt. Rotation	Modification Number
Commercial	**MT**	**30**	X	X-X	X	X	XXX

Shell Size	A ±.005	B ±.005	C Dia.	D Dia. Max.	H Accessory Thread Class 2A	J Coupling Thread Class 2B
8	.812	.594	.125/.116	.305	.5000-20 UNEF	.5625-24 UNEF
10	.937	.719	.125/.116	.405	.6250-24 UNEF	.6875-24 UNEF
12	1.031	.812	.125/.116	.531	.7500-20 UNEF	.8750-20 UNEF
14	1.125	.906	.125/.116	.665	.8750-20 UNEF	.9375-20 UNEF
16	1.250	.969	.125/.116	.790	1.0000-20 UNEF	1.0625-18 UNEF
18	1.343	1.062	.125/.116	.869	1.0625-18 UNEF	1.1875-18 UNEF
20	1.437	1.156	.125/.116	.994	1.1875-18 UNEF	1.3125-18 UNEF
22	1.562	1.250	.125/.116	1.119	1.3125-18 UNEF	1.4375-18 UNEF
24	1.703	1.375	.154/.145	1.244	1.4375-18 UNEF	1.5625-18 UNEF
28*	2.000	1.562	.154/.145	1.465	1.7500-18 UNS	1.8125-16 UN

* Shell size 28 is not a MS connector; order by commercial part number.

All dimensions for reference only.

M83723/84 & /85 – MIL-DTL-83723, Series III

Jam Nut Receptacle with Threaded Coupling

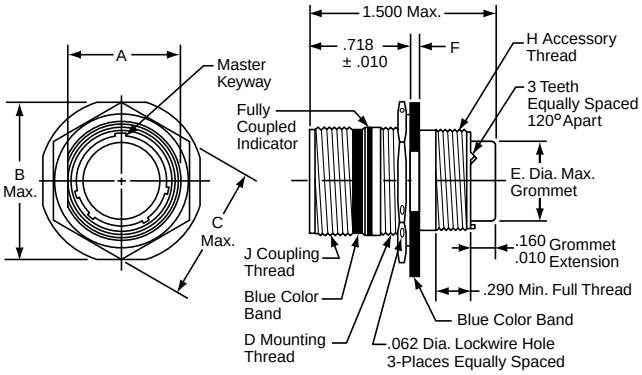

PART

To complete, see how to order page 130.

	Connector Type	Connector Style (Threaded) and Contact Type	Service Class	Shell Size & Insert Arrg	Alt. Keying Position or Alt. Rotation
Military	**M83723**	**/84 (with socket contacts)**	X	X-X	X
Military	**M83723**	**/85 (with pin contacts)**	X	X-X	X

	Connector Type (Threaded)	Connector Style	Service Class	Shell Size & Insert Arrg	Contact Type	Alt. Keying Position or Alt. Rotation	Modification Number
Commercial	**MT**	**34**	X	X-X	X	X	XXX

Shell Size	A ±.003	B Max.	C Max.	D Mounting Thread	E Dia. Max.	F	H Accessory Thread Class 2A	J Coupling Thread Class 2A
8	.593	.980	.828	.6250-20 UN	.305	.137/.097	.5000-20 UNEF	.5625-24 UNEF
10	.718	1.104	.953	.7500-20 UNEF	.405	.137/.097	.6250-24 UNEF	.6875-24 UNEF
12	.905	1.291	1.140	.9375-20 UNEF	.531	.137/.097	.7500-20 UNEF	.8750-20 UNEF
14	.968	1.391	1.250	1.0000-20 UNEF	.665	.137/.097	.8750-20 UNEF	.9375-20 UNEF
16	1.093	1.516	1.329	1.1250-18 UNEF	.790	.137/.097	1.0000-20 UNEF	1.0625-18 UNEF
18	1.217	1.641	1.455	1.2500-18 UNEF	.869	.137/.097	1.0625-18 UNEF	1.1875-18 UNEF
20	1.342	1.766	1.642	1.3750-18 UNEF	.994	.137/.097	1.1875-18 UNEF	1.3125-18 UNEF
22	1.467	1.954	1.705	1.5000-18 UNEF	1.119	.148/.128	1.3125-18 UNEF	1.4375-18 UNEF
24	1.592	2.079	1.892	1.6250-18 UNEF	1.244	.148/.128	1.4375-18 UNEF	1.5625-18 UNEF
28*	1.840	2.330	2.145	1.8750-20 UN	1.465	.148/.128	1.7500-18 UNS	1.8125-16 UN

* Shell size 28 is not a MS connector; order by commercial part number.

All dimensions for reference only.

M83723/86 & /87– MIL-DTL-83723, Series III

Straight Plug with Threaded Coupling

PART

To complete, see how to order page 130.

	Connector Type	Connector Style (Threaded) and Contact Type	Service Class	Shell Size & Insert Arrg	Alt. Keying Position or Alt. Rotation
Military	**M83723**	**/86 (with socket contacts)**	X	X-X	X
Military	**M83723**	**/87 (with pin contacts)**	X	X-X	X

	Connector Type (Threaded)	Connector Style	Service Class	Shell Size & Insert Arrg	Contact Type	Alt. Keying Position or Alt. Rotation	Modification Number
Commercial	**MT**	**36**	X	X-X	X	X	XXX

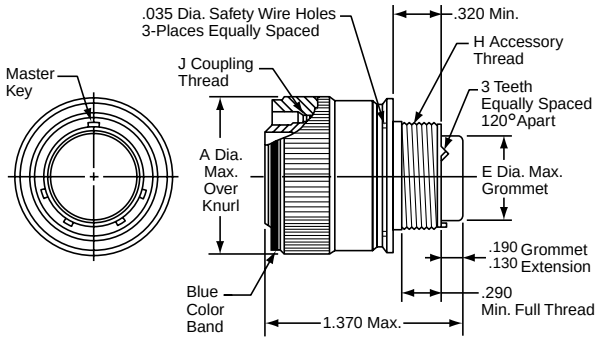

Shell Size	A Dia. Max.	E Dia. Max.	H Accessory Thread Class 2A	J Coupling Thread Class 2B
8	.756	.305	.5000-20 UNF	.5625-24 UNEF
10	.906	.405	.6250-24 UNEF	.6875-24 UNEF
12	1.078	.531	.7500-20 UNEF	.8750-20 UNEF
14	1.141	.665	.8750-20 UNEF	.9375-20 UNEF
16	1.266	.790	1.0000-20 UNEF	1.0625-18 UNEF
18	1.375	.869	1.0625-18 UNEF	1.1875-18 UNEF
20	1.510	.994	1.1875-18 UNEF	1.3125-18 UNEF
22	1.625	1.119	1.3125-18 UNEF	1.4375-18 UNEF
24	1.760	1.244	1.4375-18 UNEF	1.5625-18 UNEF
28*	2.050	1.465	1.7500-18 UNS	1.8125-18 UN

* Shell size 28 is not a MS connector; order by commercial part number. All dimensions for reference only.

M83723/91 & /92 – MIL-DTL-83723, Series III

Straight Plug, Threaded Coupling (With RFI Grounding Fingers)

PART

To complete, see how to order page 130.

	Connector Type	Connector Style (Threaded) and Contact Type	Service Class	Shell Size & Insert Arrg	Alt. Keying Position or Alt. Rotation
Military	**M83723**	**/91 (with socket contacts)**	X	X-X	X
Military	**M83723**	**/92 (with pin contacts)**	X	X-X	X

	Connector Type (Threaded)	Connector Style	Service Class	Shell Size & Insert Arrg	Contact Type	Alt. Keying Position or Alt. Rotation	Modification Number
Commercial	**MT**	**38**	X	X-X	X	X	XXX

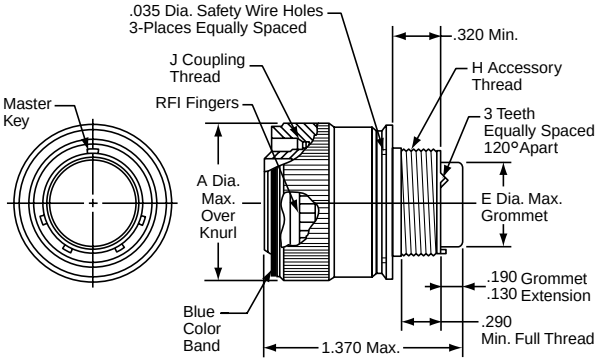

Shell Size	A Dia. Max.	E Dia. Max.	H Accessory Thread Class 2A	J Coupling Thread Class 2B
8	.756	.305	.5000-20 UNF	.5625-24 UNEF
10	.906	.405	.6250-24 UNEF	.6875-24 UNEF
12	1.078	.531	.7500-20 UNEF	.8750-20 UNEF
14	1.141	.665	.8750-20 UNEF	.9375-20 UNEF
16	1.266	.790	1.0000-20 UNEF	1.0625-18 UNEF
18	1.375	.869	1.0625-18 UNEF	1.1875-18 UNEF
20	1.510	.994	1.1875-18 UNEF	1.3125-18 UNEF
22	1.625	1.119	1.3125-18 UNEF	1.4375-18 UNEF
24	1.760	1.244	1.4375-18 UNEF	1.5625-18 UNEF
28*	2.050	1.465	1.7500-18 UNS	1.8125-18 UN

* Shell size 28 is not a MS connector; order by commercial part number. All dimensions for reference only.

M83723/95 & /96– MIL-DTL-83723, Series III

Straight Plug with Threaded Coupling (Self-Locking)

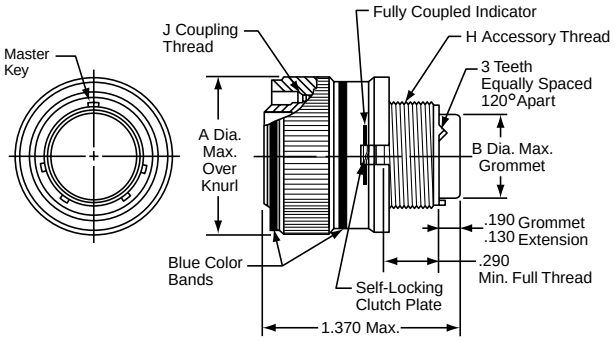

PART

To complete, see how to order page 130.

	Connector Type	Connector Style (Threaded) and Contact Type	Service Class	Shell Size & Insert Arrg	Alt. Keying Position or Alt. Rotation
Military	**M83723**	**/95 (with socket contacts)**	X	X-X	X
Military	**M83723**	**/96 (with pin contacts)**	X	X-X	X

	Connector Type (Threaded)	Connector Style	Service Class	Shell Size & Insert Arrg	Contact Type	Alt. Keying Position or Alt. Rotation	Modification Number
Commercial	**MT**	**37**	X	X-X	X	X	XXX

Shell Size	A Dia. Max.	B Dia. Max.	H Accessory Thread Class 2A	J Coupling Thread Class 2B
8	.832	.305	.5000-20 UNEF	.5625-24 UNEF
10	.959	.405	.6250-24 UNEF	.6875-24 UNEF
12	1.097	.531	.7500-20 UNEF	.8750-20 UNEF
14	1.236	.665	.8750-20 UNEF	.9375-20 UNEF
16	1.360	.790	1.0000-20 UNEF	1.0625-18 UNEF
18	1.428	.869	1.0625-18 UNEF	1.1875-18 UNEF
20	1.586	.994	1.1875-18 UNEF	1.3125-18 UNEF
22	1.703	1.119	1.3125-18 UNEF	1.4375-18 UNEF
24	1.846	1.244	1.4375-18 UNEF	1.5625-18 UNEF
28*	2.165	1.465	1.7500-18 UNS	1.8125-18 UN

* Shell size 28 is not a MS connector; order by commercial part number. All dimensions for reference only.

MIL-DTL-83723, Series III, Matrix®

How to Order – Quick-Disconnect Coupling Connectors

1. MIL-DTL-83723, Series III	2. Connector Type	3. Connector Style (Quick-Disconnect) and Contact Type)	4. Service Class	5. Shell Size/ Insert Arrangement	Alternate Keying Position of Shell or Alternate Rotation of Insert
MILITARY	M83723	/66	R	0803	N

1. Amphenol®/Matrix® MIL-DTL-83723, Series III	2. Connector Type (Quick-Disconnect)	3. Connector Style	4. Service Class	5. Shell Size/ Insert Arrangement	6. Contact Type	7. Alternate Keying Position of Shell or Alternate Rotation of Insert	Modification Number
COMMERCIAL	MQ	35	R	0803	P	7	XXX

Step 1. Military Connector Type

M83723	Designates MIL-DTL-83723 Series III Connectors

Step 2. Select a Connector Style

(Refer to military specification slash sheet number).

	Designates
/66	Straight Plug without Lanyard, Pin Contacts
/67	Straight Plug without Lanyard, Socket Contacts
/68	Straight Plug with Lanyard, Pin Contacts
/69	Straight Plug with Lanyard, Socket Contacts

Step 3. Select a Service Class

	Designates
A	Aluminum shell, black non-conductive anodize finish, fluid resistant insert
R	Aluminum shell, electroless nickel finish, fluid resistant insert
G	Stainless steel shell, passivated, fluid resistant insert
W	Aluminum shell, olive drab cadmium plated, fluid resistant insert

See additional classes of MIL-DTL-83723, Series III which are available in the Amphenol/Pyle versions: Classes K, S, N - firewall, high temperature (200°C – 260°C) and Classes H and Y - hermetics. These are covered in the 83723 Pyle section of this catalog.

Step 4. Select a Shell Size & Insert Arrangement from chart on page 124.

Shell Size & Insert Arrangements are together in one chart. First number represents Shell Size, second number is the Insert Arrangement. (Note that shell size 28 is not an MS connector, and should be ordered by commercial number.)

Step 5. Select an Alternate Keying Position - Rotation of master key/keyway of shell.

Use N for normal. Use 6, 7, 8, 9 or Y for alternate keying positions. See page 124 for descriptions.

or Step 5. Select an Alternate Rotation of Insert.

Use N for Normal. Use 1, 2, 3, 4, or 5 for alternate rotation of insert. See page 124 for descriptions.

For ordering information on accessories, such as protection caps and backshell hardware, contact Amphenol Aerospace, Sidney, NY.

Step 1. Commercial Connector Type

MQ	Designates Amphenol®/Matrix® Quick-Disconnect Coupling Connector

Step 2. Select a Connector Style

	Designates
35	Straight Plug with Lanyard
36	Straight Plug without Lanyard
38	Straight Plug with Lanyard, RFI grounding fingers (No Mil-Spec equivalent)

Step 3. Select a Service Class

	Designates
A	Aluminum shell, black non-conductive anodize finish, fluid resistant insert
R	Aluminum shell, electroless nickel finish, fluid resistant insert
G	Stainless steel shell, passivated, fluid resistant insert
W	Aluminum shell, cadmium olive drab finish, corrosion resistant, fluid resistant insert

See additional classes of MIL-DTL-83723, Series III which are available in the Amphenol/Pyle versions: Classes K, S, N - firewall, high temperature (200°C – 260°C) and Classes H and Y - hermetics. These are covered in the 83723 Pyle section of this catalog.

Step 4. Select a Shell Size & Insert Arrangement from chart on page 124.

Shell Size & Insert Arrangements are together in one chart. First number represents Shell Size, second number is the Insert Arrangement.

Step 5. Select a Contact Type

	Designates
P	Pin Contacts
S	Socket Contacts

Step 6. Select an Alternate Keying Position - Rotation of master key/keyway of shell.

Use 6, 7, 8, 9 or Y for alternate keying positions. No letter required for normal (No rotation position) See page 124 for descriptions.

or Step 6. Select an Alternate Rotation of Insert.

Use 1, 2, 3, 4, or 5 for alternate rotation of insert. No letter required for normal (No rotation position). See page 124 for descriptions.

Step 7. Modification Number

Consult Amphenol Aerospace for information.

M83723/66 & /67– MIL-DTL-83723, Series III

Quick-Disconnect Plug

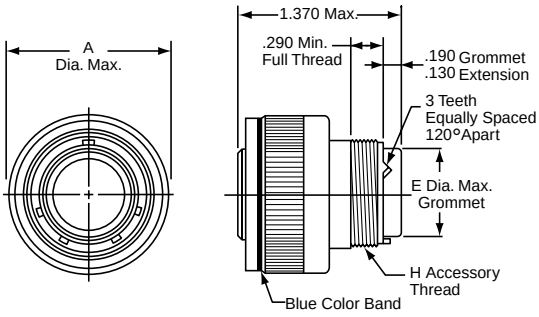

PART

To complete, see how to order page X.

	Connector Type	Connector Style (Quick-Disconnect) and Contact Type	Service Class	Shell Size & Insert Arrg	Alt. Keying Position or Alt. Rotation
Military	**M83723**	**/67 (with socket contacts)**	X	X-X	X
Military	**M83723**	**/66 (with pin contacts)**	X	X-X	X

	Connector Type (Quick-Disconnect)	Connector Style	Service Class	Shell Size & Insert Arrg	Contact Type	Alt. Keying Position or Alt. Rotation	Modification Number
Commercial	**MQ**	**36**	X	X-X	X	X	XXX

M83723/68 & /69 – MIL-DTL-83723, Series III

Quick-Disconnect Plug with Lanyard

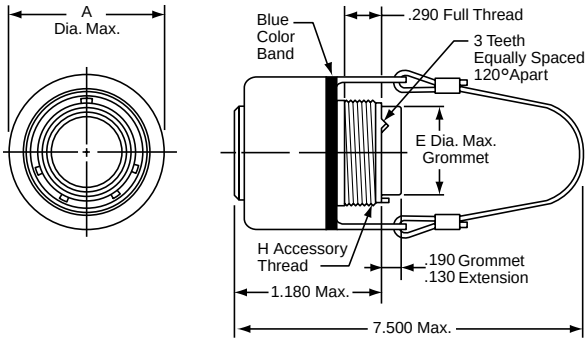

PART

To complete, see how to order page X.

	Connector Type	Connector Style (Quick-Disconnect) and Contact Type	Service Class	Shell Size & Insert Arrg	Alt. Keying Position or Alt. Rotation
Military	**M83723**	**/69 (with socket contacts)**	X	X-X	X
Military	**M83723**	**/68 (with pin contacts)**	X	X-X	X

	Connector Type (Quick-Disconnect)	Connector Style	Service Class	Shell Size & Insert Arrg	Contact Type	Alt. Keying Position or Alt. Rotation	Modification Number
Commercial	**MQ**	**35**	X	X-X	X	X	XXX
Commercial (No Mil-spec Equivalent)	**MQ**	**38**	X	X-X	X	X	XXX

Adapter for Mating Quick-Disconnect Plugs with Receptacles

Shell Size	A Dia. Max.	E Dia. Max.	H Accessory Thread Class 2A
8	1.095	.305	.5000-20 UNF
10	1.240	.405	.6250-24 UNEF
12	1.432	.531	.7500-20 UNEF
14	1.490	.665	.8750-20 UNEF
16	1.711	.790	1.0000-20 UNEF
18	1.815	.869	1.0625-18 UNEF
20	1.962	.994	1.1875-18 UNEF
22	2.070	1.119	1.3125-18 UNEF
24	2.195	1.244	1.4375-18 UNEF

Receptacle Adapter

Required to mate the quick-disconnect plug with receptacle.

Not furnished with the quick-disconnect plug; must be ordered separately.

Note: Use Locktite Material on the threads for a permanent installation to the shell.

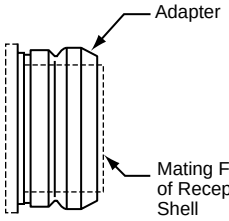

How to Order Adapter
by Commercial Part Number
2500-007-0X XX

Finish — Shell Size

00 designates aluminum, electroless nickel, Class R
01 designates aluminum, hard anodize, Class A
03 designates aluminum, cadmium plate, Class W
02 designates stainless steel, Class G

How to Order Adapter
by Military Part Number
M83723/70 X XX

Finish — Shell Size

R designates aluminum, electroless nickel, Class R
A designates aluminum, hard anodize, Class A
W designates aluminum, cadmium plate, Class W
G designates stainless steel, Class G

MIL-DTL-83723, SERIES III CRIMP CONTACTS

Contact Size	Wire Range		Socket Contacts	Pin Contacts
	AWG	mm²	Military Part Number	Military Part Number
20	24-20	0.2-0.6	M39029/5-115	M39029/4-110
16	20-16	0.5-1.4	M39029/5-116	M39029/4-111
12	14-12	2-3	M39029/5-118	M39029/4-113

CONTACT CURRENT RATING AND RETENTION

Contact Size*	Current Rating		Contact Retention	
	Amperes Max.	Voltage Drop Millivolts	Axial Load	
			lb.	N
20	7.5	35	20	89.0
16	13.0	25	25	111.2
12	23.0	25	30	133.4

* Organize individual circuits to maintain heat rise within operating temperature requirements.

SEALING PLUGS

Contact Size	Sealing Plugs	
	Military Part Number	Amphenol/Matrix Part Number
20	MS27488-20	3400-043-0020
16	MS27488-16	3400-043-0016
12	MS27488-12	3400-043-0012

CRIMPING TOOLS

Contact Size	Wire Range		Finished Wire Dia. Range		Crimping Tool Part Number	Turret or Positioner Part Number
	AWG	mm2	Inch	mm		
20	24-20	0.2-0.6	.040-.083	1.02-2.11	M22520/1-01 or M22520/2-01	M22520/1-02 or M22520/2-02
16	20-16	0.5-1.4	.053-.103	1.34-2.62	M22520/1-01	M22520/1-02
12	14-12	2-3	.097-.158	2.46-4.01	M22520/1-01	M22520/1-02

INSERTION/REMOVAL TOOLS

Contact Size	Color Code	Military Part Number	Amphenol/Matrix Part Number
20	Red/White	M81969/14-11	6500-001-0020
16	Blue/White	M81969/14-03	6500-001-0016
12	Yellow/White	M81969/14-04	6500-001-0012

Note: Each connector is furnished with contacts. One spare for inserts requiring 1 to 26 of each contact, two spares for inserts with more than 26 contacts, and a minimum of one sealing plug up to 10% of the number of contacts.

Amphenol
MIL-DTL-83723, Series III, Pyle®

TABLE OF CONTENTS

MIL-DTL-83723, Series III, Pyle®

- Table of Contents 137
- Design Features, Customer Options, Manufacturer's Specifications . 138, 139
- Quick Reference of Choices - Threaded Styles 140-142
- Quick Reference of Choices - Bayonet Styles. 143
- Quick Reference of Choices - Hermetic Receptacles, Threaded . . 144, 145
- Insert Availability, Alternate Keying Positions 146
- Insert Arrangement Drawings 147, 148
- How to Order - Military or Commercial 149
- How to Order - Pyle Commercial Designed to Meet GE Specifications . . 150
- How to Order - Boeing (BACC63CM/CN) or Pyle Comm. Equivalent. . . 151
- How to Order - ASD Designation. 152
- How to Order - Pyle Commercial Equivalents to ASD Designations/ European Standards 153
- How to Order - ESC10/11 for SBAC and Rolls Royce Standards 154
- How to Order - Pyle Commercial Equivalent to ESC11/ European Specifications - Scoop-Proof only 155
- How to Order - Hermetic, Military or Commercial 156

Threaded Shell Styles:

- Square Flange Receptacle 157
- Jam Nut (D-Hole Mount) Receptacle 158
- Straight Plug & Non-Decoupling Plug 159

Bayonet Shell Styles:

- Square Flange Receptacle 160
- Jam Nut (D-Hole Mount) Receptacle 161
- Straight Plug 162

Hermetic Shell Styles:

- Square Flange Receptacle 163
- Jam Nut (D-Hole Mount) Receptacle 164
- Solder Mount/Weld Mount Receptacle 165
- Contacts, Sealing Plugs, Tools 166-169

MIL-DTL-83723 Series III, Pyle® Typical Markets:

- Military & Commercial Aviation
  - High Temperature Applications
- Military Vehicles

Amphenol Aerospace

Amphenol Aerospace offers the Pyle® Product line of MIL-DTL-83723*, Series III Connectors.

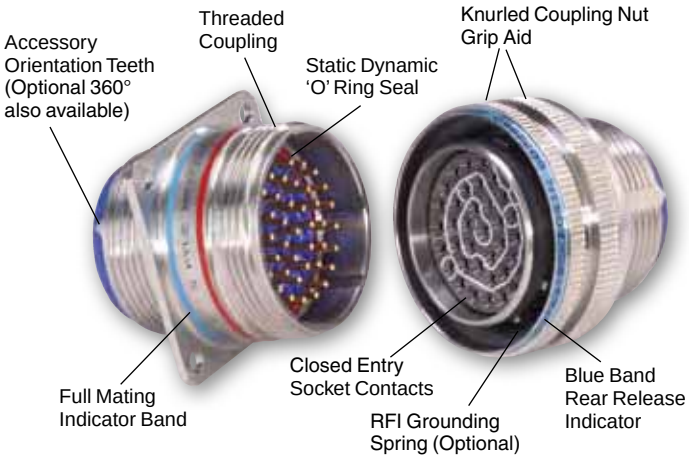

Amphenol/Pyle 83723 Series III high temperature styles are capable of operation at 260° C/500°F. A 100% scoop-proof version of the high temperature connector is also available under specification ESC11/Pyle HTK Series. In addition, this connector series incorporates a unique sealing grommet that is capable of sealing on standard diameter wire as well as Kapton wire of reduced diameter.

The Pyle 83723 family provides connectors in environmental, firewall and hermetic classes that exceed the most stringent specification requirements.

Design Features
(Threaded Style Shown)

The Amphenol MIL-DTL-83723 Series III family of connectors includes styles from Pyle National. These have proven technology for severe environments and are widely used in commercial and military aerospace markets. Amphenol/Pyle 83723 connectors incorporate many advantageous features, such as a unique threaded coupling mechanism that provides greater resistance to decoupling. This coupling mechanism eliminates the need for safety wiring and tends to couple during vibration - thus offering the user added assurance and a margin of safety.

SERVICE RATINGS

Service Rating	Recommended Operating AC Voltage at Sea Level	Test Voltage AC (RMS), 60 cps			
		Sea Level	50,000 ft.	70,000 ft.	110,000 ft.
I	600	1,500	500	375	200

Please note that the electrical data given is not an establishment of electrical safety factors. This is left entirely in the designer's hands as he can best determine which peak voltage, switching surges, transients, etc. can be expected in a particular circuit.

MIL-DTL-83723, Series III Connectors are Available in a Wide Variety of Styles:

THREADED STYLE CONNECTORS
- Stainless steel shells** provide corrosion resistance
- Metal to metal bottoming
- Unique sealing grommet accepts a wide range of wire diameters
- Patented non-decoupling device in plugs - a self-locking clutch plate that provides greater resistance to decoupling than coupling during vibration

BAYONET STYLE CONNECTORS
- Same quality features of the threaded style, but with 3 point bayonet coupling - quick turn to lock, visual confirmation of complete coupling

HIGH TEMPERATURE STYLE CONNECTORS
- High temperature connector materials and contacts provide operation to 200°C and Firewall capability to 260°C
- Improved metal to metal bottoming design
- Unique sealing grommet accepts a wide range of wire diameters
- Improved 360° accessory orientation teeth provide greater performance under vibration
- Patented non-decoupling device (torque differential)
- Improved shell to shell conductivity with optional RFI grounding fingers
- Styles available that meet several European specifications, General Electric and Rolls Royce specifications

HERMETIC STYLE CONNECTORS
- Hermetic styles are available in threaded receptacles with solderwell or flat eyelet termination
- Designed for environmental moisture sealing with fused compression glass sealed inserts
- High temperature hermetics 200°C and 260°C Firewall

* MIL-DTL-83723 supercedes MIL-C-83723.

** The Amphenol Pyle 83723 family is offered in stainless steel shell classes. See the Amphenol Matrix 83723 family for aluminum shell classes, in the preceding section of this catalog.

Amphenol Aerospace

The Amphenol/Pyle® Product line of MIL-DTL-83723*, Series III Connectors was developed for the higher operating temperatures inherent in today's high performance aircraft and aircraft engines.

These connectors meet the performance requirements of the following manufacturer's specifications:

- Boeing BACC63CM/CN* Firewall
- European: ASD† EN2997
- General Electric: M50TF3564
- Rolls Royce/SBAC: ESC10 and ESC11

ESC11
Engine Connector

MIL-DTL-83723, SERIES III CONNECTOR PERFORMANCE CHARACTERISTICS

Operating Temperature Data	Std: –85°F (–65°C) to 392°F (200°C) Class K types meet fireproof test per MIL-DTL-83723 2000°F (1093°C) High Temperature Series: Operates at 500°F (260°C)
Altitude	Sea Level to 110,000 feet
Voltage Breakdown Rating	Service Rating I Sea Level .....1,500 50,000 ft. .....500 70,000 ft. ..... 375 110,000 ft. 200
Contact Rating	Size 20 contacts ... 7.5 amperes max. Size 16 contacts ... 13.0 amperes max. Size 12 contacts ... 23 amperes max.
Contact Retention Strength	Exceeds MIL-DTL-83723 requirements
Connector Durability	500 cycles per MIL-DTL-83723 for threaded coupling; 500 cycles per General Electric M50TF2321 for non-decoupling styles
Humidity	To 98% relative humidity, including condensation
Exposure	Freezing rain
Non-Decoupling	Exceeds requirements of MIL-DTL-83723/95 and 96.
Vibration	Meets MIL-DTL-83723 of 41.7G's for 16 hours.; Boeing BACC63CM/CN for 36 hours General Electric vibration spec. M50TF2321 and M50TF2238 for 36 hours, which includes: **Temp. Extremes G Level Time Length** Room Temp. ..... 60 G's ..... 12 hrs. (4 hrs. each axis) –65°F ±5°F ..... 60 G's ..... 12 hrs. (4 hrs. each axis) 350°F ±5°F ..... 60 G's .....12 hrs. (4 hrs. each axis)

HERMETIC CONNECTOR PERFORMANCE CHARACTERISTICS

Thermal Shock	No damage detrimental to the operation of the connector occurs when subjected to 10 cycles of thermal shock from 0°C to 90°C and back to 0°C.
Physical Shock (Mated)	300 G's
Moisture Resistance (Mated)	500 Megohms
Insulation Resistance, High Temp. (Mated)	500 Megohms
Corrosion (Unmated)	Complies with MIL-DTL-83723 Req.
Temperature Life	Fully functional for 1000 hours at 200°C (392°F) ambient. Internal temperature 238°C (460°F).
Air Leakage (Unmated)	Less than .01 micron per cubic feet per hour on application of 15 PDS pressure differential across the connector.
Altitude Immersion (Mated)	After 3 cycles immersed in salt water with pressure reduced to 1 in. Hg (75,000 ft. altitude) for 30 minutes and returned to atmosphere pressure. While connectors submerged insulation resistance should remain 1000 megohms minimum and support 1500 volts RMS applied without flash-over or breakdown.
High Potential Voltage Altitude (Unmated)	When tested in accordance with MIL-STD-202, Method 301, no flash-over or breakdown under simulated altitude conditions as shown: **Altitude/Service Rating I** 50,000 ..... 500 AC-RMS 70,000 ..... 375 AC-RMS 110,000 ..... 200 AC-RMS

* BACC63CM supersedes BACC63BR and BACC63CN supersedes BACC63BT.

† ASD supersedes AECMA

MIL-DTL-83723, SERIES III SQUARE FLANGE RECEPTACLE, THREADED COUPLING

Military: **M83723/82** with Sockets, Classes G, K

Military: **M83723/83** with Pins, Classes G, K

Commercial: **BT( )-17**
With 'O' ring seal, Classes G, K

Comm. Special for General Electric: **BJ-17**
With Static Dynamic Seal, Stainless Steel, but not avail. in Firewall

BJ8-17
Same as BJ-17 except with Scoop-proof recessed pins

BN-17
Same as BJ-17 except Electro-deposited Nickel Base

BN8-17
Same as BN-17 except with Scoop-proof recessed pins

BNK-17
Same as BN except Stainless Steel Firewall

Special with Boeing Designation: **BACC63CN****
With 'O' ring seal, Stainless Steel Firewall, with Boeing approved contacts, Shell modifications with 360° teeth per MS3155

Comm. Special per Boeing Co. Spec.: **BSK-17**
Stainless Steel Firewall with 'O' ring seal, qualified to Boeing, Y126 Variation - with Boeing approved contacts

Commercial ASD Designation: **EN2997 ( )0**
Meets ASD specifications
200°C temp. (Classes K, S, Y),
260°C high temp. (Classes KE, SE, YE)

Comm.- Meet Several European Stds: **BT( )-17**
With 'O' ring seal, Classes G, K
Variations for Euro market specifications

BJ( )-17
With Static Dynamic Seal, Classes G, K
Variations for Euro market specifications

** BACC63CN supersedes BACC63BT.

See how to order pages 149-156 for complete part numbers.

Bayonet style square flange receptacles are shown on page 160.

Square Flange Receptacle Threaded

SERVICE CLASSES* MILITARY AND COMMERCIAL

G	Stainless steel, 200°C
K	Stainless steel, 200°C Firewall capability
S	Stainless steel, 200°C Firewall capability, Grounding Spring
P	Stainless steel, 200°C, Hermetic with Eyelet contacts
Y	Stainless Steel, 200°C, Hermetic with Solderwell contacts
KE	Stainless Steel, High Temp. (260°C) Firewall capability
SE	Stainless steel, High Temp. (260°C) Firewall capability, Grounding Spring
YE	Stainless Steel, High Temp. (260°C) Firewall capability, Hermetic with solderwell contacts

* For Classes A, R and W (aluminum shell types) - Amphenol supplies these in their Matrix 83723 family. See the preceding section of this catalog, 83723 III Matrix.

Square Flange Receptacle, Threaded, per European Stds.
(Green Insert - High Temp 260°C;
Blue insert - 200°C)

Commercial - Meet Society of British Aerospace Co./Rolls Royce Standards: **ESC10 ( )0**
260°C Firewall (Classes KE, SE, YE),
360° accessory teeth per MS3155

ESC11 ( )0
260°C Firewall (Classes KE, SE, YE),
Scoop-proof recessed pins,
360° accessory teeth per MS3155

ESC10 & ESC11 also available in Hermetic square flange receptacles - See Hermetic quick ref. page XX.

ESC11 with Scoop-Proof (Recessed pins): **HTK-17**
Standard ESC11, Class K Firewall, Scoop-proof, Variations for Euro market specifications

HNK-17
Nickel finish, Class K Firewall
Mating recept. has 'O' ring seal,
Scoop-proof, Variations for Euro market specs

HSK-17
Same as HTK, except this is a special designator for Boeing Co.

MIL-DTL-83723, SERIES III JAM NUT (D-HOLE MOUNT) RECEPTACLE, THREADED COUPLING

Military: **M83723/84** with Sockets, Classes G, K

Military: **M83723/85** with Pins, Classes G, K

Commercial: **BT( )-19**
With 'O' ring seal, Classes G, K

Comm. Special for General Electric: **BJ-19**
With Static Dynamic Seal, Stainless Steel, but not avail. in Firewall

BJ8-19
Same as BJ-17 except with Scoop-proof recessed pins

BN-19
Same as BJ-17 except Electro-deposited Nickel Base

BN8-19
Same as BN-17 except with Scoop-proof recessed pins

BNK-19
Same as BN except Stainless Steel Firewall

Commercial ASD Designation: **EN2997 ( )7**
Meets ASD specifications
200°C temp. (Classes K, S, Y),
260°C high temp. (Classes KE, SE, YE)

NFL 54143 ( )7

Comm.- Meet Several European Stds: **BT( )-19**
With 'O' ring seal, Classes G, K
Variations for Euro market specifications

BJ( )-19
With Static Dynamic Seal,
Classes G, K
Variations for Euro market specifications

Commercial - Meet Society of British Aerospace Co./Rolls Royce Standards: ESC10 & ESC11 jam nut receptacles are available in Hermetic only - See Hermetic quick ref. page 145

Jam Nut (D-Hole Mount) Receptacle, Threaded

SERVICE CLASSES* MILITARY AND COMMERCIAL

G	Stainless steel, 200°C
K	Stainless steel, 200°C Firewall capability
S	Stainless steel, 200°C Firewall capability, Grounding Spring
P	Stainless steel, 200°C, Hermetic with Eyelet contacts
Y	Stainless Steel, 200°C, Hermetic with Solderwell contacts
KE	Stainless Steel, High Temp. (260°C) Firewall capability
SE	Stainless steel, High Temp. (260°C) Firewall capability, Grounding Spring
YE	Stainless Steel, High Temp. (260°C) Firewall capability, Hermetic with solderwell contacts

* For Classes A, R and W (aluminum shell types) - Amphenol supplies these in their Matrix 83723 family. See the preceding section of this catalog, 83723 III Matrix.

No Boeing Designated Jam nut receptacle.

See how to order pages 149-156 for complete part numbers.

Bayonet style jam nut receptacles are shown on page 161.

MIL-DTL-83723, SERIES III STANDARD STRAIGHT PLUG, THREADED COUPLING

Military: **M83723/86** with Sockets, Classes G, K

Military: **M83723/87** with Pins, Classes G, K

Commercial: **BT( )11**
Mating recept. has 'O' ring seal,
Classes G, K

Comm. Special for General Electric: **BJ-11**
With Static Dynamic Seal,
Stainless Steel, but not avail. in Firewall

BJ8-11
Same as BJ-17 except with Scoop-proof recessed pins

BN-11
Same as BJ-17 except Electro-deposited Nickel Base

BN8-11
Same as BN-17 except with Scoop-proof recessed pins

BNK-11
Same as BN except Stainless Steel Firewall

Standard Straight Plug, Threaded

SERVICE CLASSES* MILITARY AND COMMERCIAL

G	Stainless steel, 200°C
K	Stainless steel, 200°C Firewall capability
S	Stainless steel, 200°C Firewall capability, Grounding Spring
KE	Stainless Steel, High Temp. (260°C) Firewall capability
SE	Stainless steel, High Temp. (260°C) Firewall capability, Grounding Spring

* For Classes A, R and W (aluminum shell types) - Amphenol supplies these in their Matrix 83723 family. See the preceding section of this catalog, 83723 III Matrix.

No Boeing straight plug designations. No ASD or other European/ESC10 or ESC11 straight plug designations. See page 162 for Bayonet style straight plug style.

MIL-DTL-83723, SERIES III NON-DECOUPLING PLUG (UNIQUE SELF-LOCKING CLUTCH PLATE), THREADED COUPLING

Military: **M83723/95** with Sockets, Classes G, K

M83723/96 with Pins, Classes G, K

M83723/97 with EMI Grounding spring, with Pins

M83723/97 with EMI Grounding spring, with Sockets

Commercial: **BT( )12**
Mating recept. has 'O' ring seal,
Classes G, K

Comm. Special for General Electric: **BJ-12**
With Static Dynamic Seal,
Stainless Steel, but not avail. in Firewall

BJ8-12
Same as BJ-17 except with Scoop-proof recessed pins

BN-12
Same as BJ-17 except Electro-deposited Nickel Base

BN8-12
Same as BN-17 except with Scoop-proof recessed pins

BNK-12
Same as BN except Stainless Steel Firewall

Special with Boeing Designation: **BACC63CM****
Mating recept. has 'O' ring seal,
Stainless Steel Firewall, with Boeing approved contacts,
Shell modifications with 360° teeth per MS3155

Comm. Special per Boeing Co. Spec.: **BSK-12**
Stainless Steel Firewall qual. to Boeing,
Y126 Variation - with Boeing approved contacts

Non-Decoupling Plug, Threaded
Left - Green Insert - High Temp 260°C and 360° Accessory Teeth;
Right - Blue insert - 200°C and 3 Accessory Teeth

Commercial ASD Designation: **EN2997 ( )6**
Meets ASD specifications
200°C temp. (Classes K, S),
260°C high temp. (Classes KE, SE)

Comm.- Meet Several European Stds: **BT( )-12**
Mating recept. has 'O' ring seal, Classes G, K
Variations for Euro market specifications

BJ( )-12
With Static Dynamic Seal, Classes G, K
Variations for Euro market specifications

Commercial - Meet Society of British Aerospace Co./Rolls Royce Standards: **ESC10 ( )6**
260°C Firewall (Classes KE, SE),
360° accessory teeth per MS3155

ESC11 ( )6
260°C Firewall (Classes KE, SE),
Scoop-proof, 360° accessory teeth per MS3155

ESC11 with Scoop-Proof (Recessed pins): **HTK-12**
Standard ESC11, Class K Firewall,
Scoop-proof, Variations for Euro market specs

HNK-12
Nickel finish, Class K Firewall
Mating recept. has Static Dynamic seal,
Scoop-proof, Variations for Euro market specs

HSK-12
Same as HTK, except this is a special designator for Boeing Co.

** BACC63CM supersedes BACC63BR.

See how to order pages 149-156 for complete part numbers.

No Bayonet style Non-Decoupling plug available.

MIL-DTL-83723, SERIES III SQUARE FLANGE RECEPTACLE, BAYONET COUPLING

Military:	**M83723/71** with Sockets, Classes G, K
Military:	**M83723/72** with Pins, Classes G, K
Commercial:	**BY( )17** With 'O' ring seal, Classes G, K

Square Flange Receptacle with Bayonet Coupling

MIL-DTL-83723, SERIES III JAM NUT (D-HOLE MOUNT) RECEPTACLE, BAYONET COUPLING

Military:	**M83723/73** with Sockets, Classes G, K
Military:	**M83723/74** with Pins, Classes G, K
Commercial:	**BY( )19** With 'O' ring seal, Classes G, K

Jam Nut (D-Hole Mount) Receptacle with Bayonet Coupling

MIL-DTL-83723, SERIES III STRAIGHT PLUG, BAYONET COUPLING

Military:	**M83723/75** with Sockets, Classes G, K
Military:	**M83723/76** with Pins, Classes G, K
Commercial:	**BY( )10** With 'O' ring seal, Classes G, K

Straight Plug with Bayonet Coupling

SERVICE CLASSES* MILITARY AND COMMERCIAL

G	Stainless steel, 200°C
K	Stainless steel, 200°C Firewall capability

* For Classes A, R and W (aluminum shell types) - Amphenol supplies these in their Matrix 83723 family. See the preceding section of this catalog, 83723 III Matrix.

Bayonet coupling connectors are offered in Military 83723 and Commercial equivalent designations. See how to order page 149. They are not included in Boeing, GE, ASD and other European specified connectors.

Shell size 28 is not available in Bayonet coupling connectors.

MIL-DTL-83723, SERIES III
HERMETIC SQUARE FLANGE RECEPTACLE, THREADED COUPLING

Hermetic Square Flange Receptacle, Threaded

SERVICE CLASSES HERMETIC MILITARY AND COMMERCIAL

Y	Stainless Steel, 200°C, Hermetic with solderwell contacts
P	Stainless steel, 200°C, Hermetic with eyelet contacts
YE	Stainless Steel, High Temp. (260°C) Firewall capability, Hermetic with solderwell contacts

Military: **M83723/88Y**
Stainless Steel, Class Y,
Solderwell contacts

Military: **M83723/88P**
Stainless Steel, Class P,
Eyelet contacts

Commercial: **BTY-17**
Stainless Steel, 'O' ring Seal,
Solderwell or Eyelet contacts,
200°C or 260°C

BFY-17
Stainless Steel, Static Dynamic
Seal, Solderwell or Eyelet contacts,
200°C or 260°C

BNY-17
Stainless Steel, Static Dynamic
Seal, Electro-deposited Nickel, Solderwell or Eyelet contacts,
200°C or 260°C

Commercial
ASD Designation: **EN2997Y0 / YE0**
Meets ASD Specifications, Stainless Steel,
Class Y (200°C) / Class YE (260°C), Solderwell contacts

Commercial - Meet
Society of British
Aerospace Co./Rolls
Royce Standards: **ESC10YE2**
260°C Firewall, Stainless Steel, Class YE, Solderwell contacts

ESC11YE2
260°C Firewall, Stainless Steel, Class YE, Solderwell contacts,
Scoop-proof Recessed pins

MIL-DTL-83723, SERIES III
HERMETIC JAM NUT RECEPTACLE, THREADED COUPLING

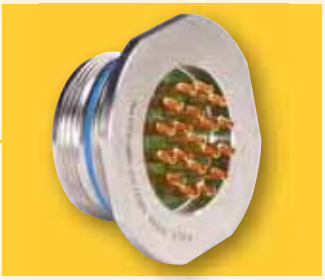

Hermetic Jam Nut Receptacle, Threaded

Military: **M83723/89Y**
Stainless Steel, Class Y, Solderwell contacts

Military: **M83723/89P**
Stainless Steel, Class Y, Eyelet contacts

Commercial: **BTY-19**
Stainless Steel, 'O' ring Seal, Solderwell or Eyelet contacts, 200°C or 260°C

BFY-19
Stainless Steel, Static Dynamic Seal, Solderwell or Eyelet contacts, 200°C or 260°C

BNY-19
Stainless Steel, Static Dynamic Seal, Electro-deposited Nickel, Solderwell or Eyelet contacts, 200°C or 260°C

Commercial
ASD Designation: **EN2997Y7 / YE7**
Meets ASD Specifications, Stainless Steel,
Class Y (200°C) / Class YE (260°C), Solderwell contacts

Commercial - Meet
Society of British
Aerospace Co./Rolls
Royce Standards: **ESC10YE3**
260°C Firewall, Stainless Steel, Class YE, Solderwell contacts

ESC11YE3
260°C Firewall, Stainless Steel, Class YE, Solderwell contacts,
Scoop-proof Recessed pins

Commercial BTY, BFY and BNY meet European specifications and General Electric spec. GEM50TF3564, Classes A & B.

Shell sizes 20, 24 and 28, consult Amphenol Aerospace for availability.

Hermetic style receptacles are not included in Boeing designations.

MIL-DTL-83723, SERIES III HERMETIC SOLDER MOUNT/WELD MOUNT RECEPTACLE, THREADED COUPLING

Military: **M83723/90Y**
Stainless Steel, Class Y,
Solderwell contacts

Military: **M83723/90P**
Stainless Steel, Class P,
Eyelet contacts

Commercial: **BTY-14**
Stainless Steel, 'O' ring Seal,
Solderwell or Eyelet contacts,
200°C or 260°C

BFY-14
Stainless Steel, Static Dynamic
Seal, Solderwell or Eyelet contacts,
200°C or 260°C

BNY-14
Stainless Steel, Static Dynamic
Seal, Electro-deposited Nickel,
Solderwell or Eyelet contacts,
200°C or 260°C

Commercial ASD Designation: **EN2997Y1 / YE1**
Meets ASD Specifications, Stainless Steel,
Class Y (200°C) / Class YE (260°C), Solderwell contacts

Commercial - Meet Society of British Aerospace Co./Rolls Royce Standards: **ESC10YE1**
260°C Firewall, Stainless Steel, Class YE, Solderwell contacts

ESC11YE1
260°C Firewall, Stainless Steel, Class YE, Solderwell contacts,
Scoop-proof Recessed pins

Hermetic Solder Mount/Weld Mount Receptacle, Threaded

SERVICE CLASSES HERMETIC MILITARY AND COMMERCIAL

Y	Stainless Steel, 200°C, Hermetic with solderwell contacts
P	Stainless steel, 200°C, Hermetic with eyelet contacts
YE	Stainless Steel, High Temp. (260°C) Firewall capability, Hermetic with solderwell contacts

Commercial BTY, BFY and BNY meet European specifications and General Electric spec. GEM50TF3564, Classes A & B.

Shell sizes 20, 24 and 28, consult Amphenol Aerospace for availability.

Hermetic style receptacles are not included in Boeing designations.

MIL-DTL-83723, Series III, Pyle®

Insert Availability and Identification, Alternate Keying Positions

INSERT ARRANGEMENTS

Shell Size/ Insert Arrangement	Service Rating	Total Contacts	Contact Size			
			8	12	16	20
08-03	I	3				3
08-98	I	3				3
10-02**	I	2				2
10-05	I	5				5
10-06	I	6				6
10-20	I	2			2	
12-03***	I	3			3	
12-12	I	12				12
14-04***	I	4		4		
14-07***	I	7			7	
14-12	I	12			3	9
14-15	I	15				15
16-10***	I	10			10	
16-24	I	24				24
18-08	I	8		8		
18-14***	I	14			14	
18-31	I	31				31
20-16***	I	16			16	
20-25	I	25		6		19
20-28**	I	28		4		24
20-39	I	39			2	37
20-41	I	41				41
22-12**	I	12		12		
22-19***	I	19			19	
22-27	I	27			27	
22-32**	I	32		6		26
22-39**	I	39			12	27
22-55	I	55				55
24-19†✦	I	19		19		
24-30†***	I	30			30	
24-43**	I	43			20	23
24-46†✦✦	I	46	2 Twinax		4	40
24-57	I	57		2		55
24-61	I	61				61
28-41†	I	41			41	
28-42†***	I	42			42	
28-91†*	I	91				91

† Not an MS layout.

* Special - consult Amphenol for availability.

** Special Pyle with Matrix 83723 insert (ESC10 type, EN2997 Spec); consult Amphenol for availability.

***Boeing Qualified Arrangements (See Boeing How to Order page 151)

✦ 24-19 is a special ground plane insert with purchased size 12 Coax contacts; consult Amphenol for information.

✦✦ 24-46 is a special insert that accommodates size 8 twinax contacts with ground spring.

Size 8 and Size 12 cavities can accommodate Twinax or Coax contacts; consult Amphenol for information.

Sizes 20, 24 and 28 Hermetic; consult Amphenol for availability.

Size 28 not available in Bayonet style.

ALTERNATE KEYING POSITIONS (Rotation of key/keyway of shell)

To avoid cross-plugging problems in applications requiring the use of more than one connector of the same size and arrangement, alternate keying positions are available as indicated in the chart below. The diagram shows the engaging view of a receptacle shell with keyways. The insert is rotated counter-clockwise relative to the center-line. Plug shells would be the opposite of this diagram.

In the "Normal insert position" (position N), the insert center line coincides with the center-line of the master key/ keyway of the shell. In the "alternate keying positions" (positions 6, 7, 8, 9 and Y), the minor keys/keyways are positioned with reference to master key/keyway as indicated in the keying position table.

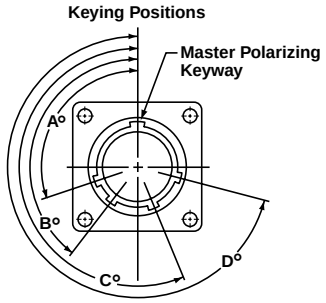

Shown is Engaging Face View of Receptacle Shell with Keyways (Plug Shell Keys would be Opposite)

ALTERNATE KEYING POSITIONS OF SHELL

Shell Size	Polarizing Position	Key/Keyway Positions			
		A°	B°	C°	D°
8 thru 24	N	105	140	215	265
8 & 10	6	102	132	248	320
	7	80	118	230	312
	8	35	140	205	275
	9	64	155	234	304
10 only	Y††	25	115	220	270
12, 14, 16, 18, 20, 22, 24 and 28	6	18	149	192	259
	7	92	152	222	342
	8	84	152	204	334
	9	24	135	199	240
	Y††	98	152	268	338

ESC 11 (HTK SERIES) ONLY

Shell Size	Polarizing Position	Key/Keyway Positions			
		A°	B°	C°	D°
14 thru 24	N	95	145	220	255
	6	101	168	211	342
	7	18	138	208	268
	8	26	156	208	276
	9	120	161	225	336

†† Position Y supersedes inactive positions 10 and Z designations. Ref. MIL-STD-1554.

For ordering information on accessories, such as protection caps and backshell hardware, contact Amphenol Aerospace, Sidney, NY.

MIL-DTL-83723, Series III, Pyle®
Insert Arrangements

front face of pin insert or rear face of socket insert illustrated

Insert Arrangement	08-03	08-98	10-02**	10-05	10-06	10-20	12-03***	12-12
Service Rating	I	I	I	I	I	I	I	I
Number of Contacts	3	3	2	5	6	2	3	12
Contact Size	20	20	20	20	20	16	16	20

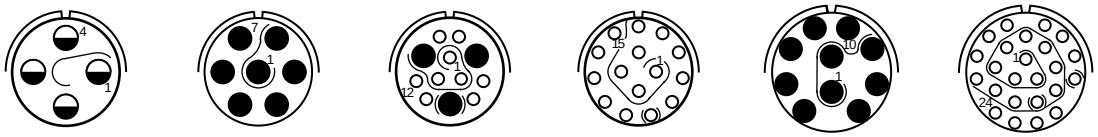

Insert Arrangement	14-04***	14-07***	14-12	14-15	16-10***	16-24
Service Rating	I	I	I	I	I	I
Number of Contacts	4	7	9 3	15	10	24
Contact Size	12	16	20 16	20	16	20

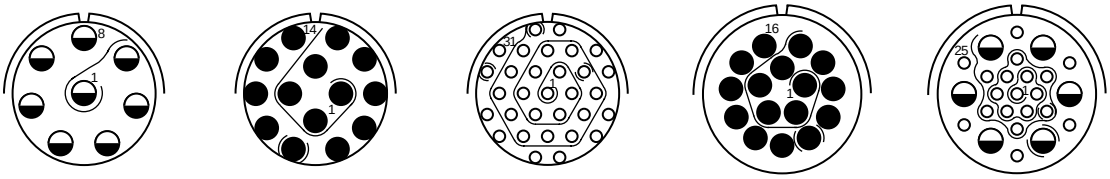

Insert Arrangement	18-08	18-14***	18-31	20-16***	20-25
Service Rating	I	I	I	I	I
Number of Contacts	8	14	31	16	19 6
Contact Size	12	16	20	16	20 12

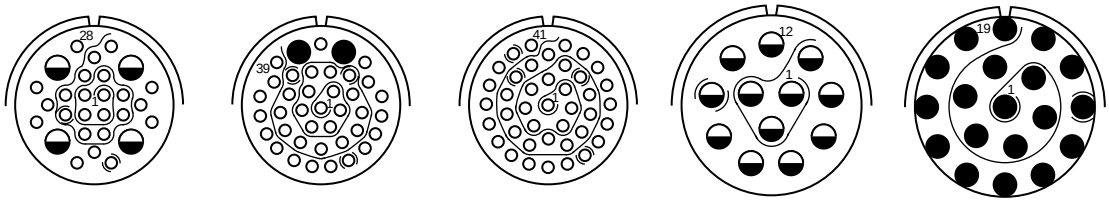

Insert Arrangement	20-28**	20-39	20-41	22-12**	22-19***
Service Rating	I	I	I	I	I
Number of Contacts	24 4	37 2	41	12	19
Contact Size	20 12	20 16	20	12	16

† Not an MS layout.
* Special - consult Amphenol for availability.
** Special Pyle with Matrix 83723 insert (ESC10 type, EN2997 Spec); consult Amphenol for availability.
***Boeing Qualified Arrangements (See Boeing How to Order page 151)
Size 8 and Size 12 cavities can accommodate Twinax or Coax contacts; consult Amphenol for information.
Sizes 20, 24 and 28 Hermetic; consult Amphenol for availability.
Size 28 not available in Bayonet style.

CONTACT LEGEND ○ 20 ● 16 ◒ 12 ◉ 8

front face of pin insert or rear face of socket insert illustrated

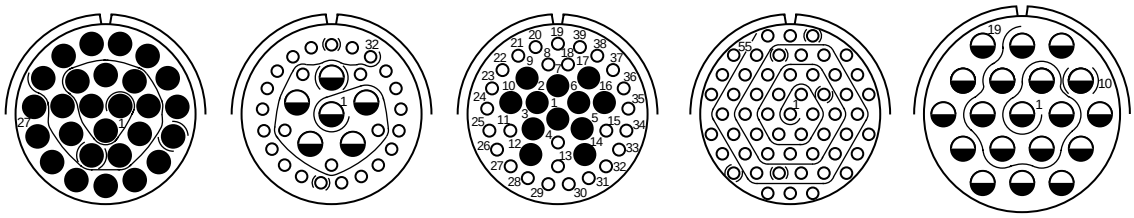

Insert Arrangement	22-27	22-32**		22-39**		22-55	24-19†✦
Service Rating	I	I		I		I	I
Number of Contacts	27	26	6	27	12	55	19
Contact Size	16	20	12	20	16	20	12

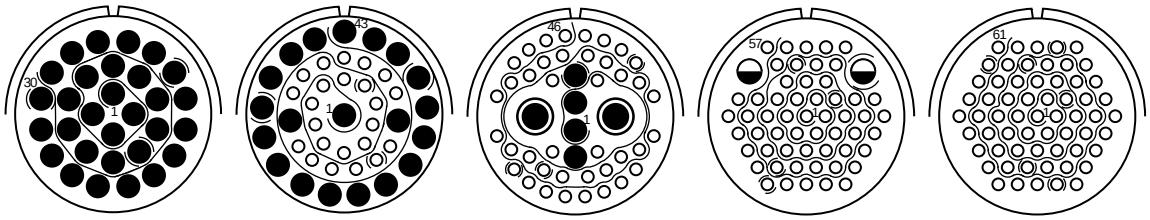

Insert Arrangement	24-30†***	24-43**		24-46†✦✦			24-57		24-61
Service Rating	I	I		I			I		I
Number of Contacts	30	23	20	40	4	2	55	2	61
Contact Size	16	20	16	20	16	8 Twinax	20	12	20

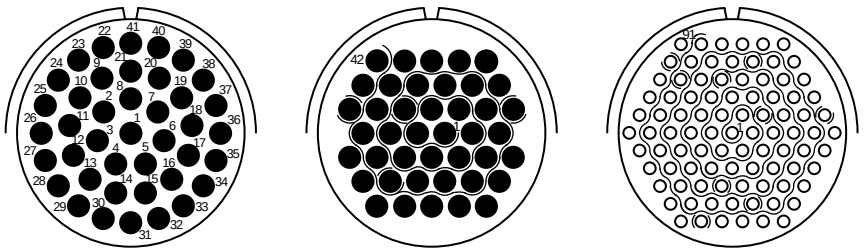

Insert Arrangement	28-41†	28-42†***	28-91†*
Service Rating	I	I	I
Number of Contacts	41	42	91
Contact Size	16	16	20

† Not an MS layout.

* Special - consult Amphenol for availability.

** Special Pyle with Matrix 83723 insert (ESC10 type, EN2997 Spec); consult Amphenol for availability.

***Boeing Qualified Arrangements (See Boeing How to Order page 151)

✦ 24-19 is a special ground plane insert with purchased size 12 Coax contacts; consult Amphenol for information.

✦✦ 24-46 is a special insert that accommodates size 8 twinax contacts with ground spring.

Size 8 and Size 12 cavities can accommodate Twinax or Coax contacts; consult Amphenol for information.

Sizes 20, 24 and 28 Hermetic; consult Amphenol for availability.

Size 28 not available in Bayonet style.

CONTACT LEGEND ○ 20 ● 16 ◒ 12 ◉ 8

MIL-DTL-83723, Series III, Pyle®

How to Order – Military or Commercial Designation

	1.	2.	3.	4.	5.
MIL-DTL-83723, Series III	Connector Type	Connector Style and Contact Type (Crimp)	Service Class	Shell Size/ Insert Arrangement	Alternate Keying Position of Shell
MILITARY	M83723	/82	G	16-24	6

	1.	2.	3.	4.	5.	6.	7.	8.
Amphenol® Pyle® MIL-DTL-83723, Series III	Connector Style	Service Class	Shell Style	Shell Size/ Insert Arrangement	Contact Type	Alternate Contact Finish or Without Contacts	Alternate Keying Position of Shell	Variations
COMMERCIAL	BT	G	-17	16-24	S	D	06	XXX

Step 1. Military Connector Type

M83723	Designates MIL-DTL-83723 Series III Connectors

Step 2. Select a Connector Style

(Refer to military specification slash sheet number).
(How to Order Hermetic Styles is provided on page 156).

	Designates
/71	Bayonet, Square Flange Receptacle, with sockets
/72	Bayonet, Square Flange Receptacle, with pins
/73	Bayonet, Jam Nut (D-Hole Mount) Recept., with sockets
/74	Bayonet, Jam Nut (D-Hole Mount) Recept., with pins
/75	Bayonet, Straight Plug, with sockets
/76	Bayonet, Straight Plug, with pins
/82	Threaded, Square Flange Receptacle, with sockets
/83	Threaded, Square Flange Receptacle, with pins
/84	Threaded, Jam Nut (D-Hole Mount) Recept., with sockets
/85	Threaded, Jam Nut (D-Hole Mount) Recept., with pins
/86	Threaded, Straight Plug, with sockets
/87	Threaded, Straight Plug, with pins
/95	Threaded, Non-Decoupling Plug, with sockets
/96	Threaded, Non-Decoupling Plug, with pins
/97	Threaded, Non-Decoupling Plug, with EMI Grounding spring, with sockets
/98	Threaded, Non-Decoupling Plug, with EMI Grounding spring, with pins

Step 3. Select a Service Class

	Designates
G	Stainless Steel
K	Stainless Steel Firewall

Note: See Matrix 83723 styles for aluminum classes A, R and W.

Step 4. Select a Shell Size & Insert Arrangement from chart on pg. 146. (except size 28 is not available in Bayonet Style)

Shell Size & Insert Arrangements are on page 146. First number represents Shell Size, second number is the Insert Arrangement

Step 5. Select an Alternate Keying Position - Rotation of master key/keyway of shell.

Use N for normal. Use 6, 7, 8, 9 or Y for alternate keying positions. See page 146 for descriptions.

Step 1. Select a Commercial Connector Style Designed to be Equivalent to M83723, Series III

	Designates
BT	Threaded with 'O' ring seal in receptacle
BY	Bayonet with 'O' ring seal in receptacle

(How to Order Hermetic Styles is provided on page 156).

Step 2. Select a Service Class

	Designates
G	Stainless steel
K	Stainless steel Firewall

Note: See Matrix 83723 styles for aluminum classes A, R and W.

Step 3. Select a Shell Style

	Designates
-10	Straight Plug, Bayonet coupling only
-11	Straight Plug, Threaded coupling only
-12	Non-Decoupling Plug, Threaded coupling only
-17	Square Flange Receptacle
-19	Jam Nut (D-Hole Mount) Receptacle

Step 4. Select a Shell Size & Insert Arrangement from chart on pg. 146. (except size 28 is not available in Bayonet Style)

Shell Size & Insert Arrangements are on page 146. First number represents Shell Size, second number is the Insert Arrangement.

Step 5. Select a Contact Type (Crimp)

	Designates
P	Pin Contacts
S	Socket Contacts

Step 6. Alternate Contact Finish or without Contacts

	Designates
D	Gold per SAE AS39029*
E	Without contacts

Step 7. Select an Alternate Keying Position - Rotation of master key/keyway of shell.

Use N for normal. Use 06, 07, 08, 09 or Y for alternate keying positions. See page 146 for descriptions.

Step 8. Variations

Consult Amphenol Aerospace, Sidney, NY for information.

*supersedes MIL-C-39029

MIL-DTL-83723, Series III, Pyle®

How to Order – Pyle Commercial - Designed to Meet General Electric Specifications

	1.	2.	3.	4.	5.	6.	7.	8.
Amphenol® Pyle® MIL-DTL-83723, Series III	Connector Type	Shell Style	Shell Modification (Accessory Teeth)	Shell Size/ Insert Arrangement	Contact Type	Alternate Contact Finish or Without Contacts	Alternate Keying Position of Shell	Variations
PYLE COMMERCIAL DESIGNED TO MEET G. E. SPECIFICATIONS	BJ	-17	E	16-24	S	D	06	XXXX

Step 1. Select a Commercial Connector Type Designed to Meet General Electric Specifications

	Designates
BJ	Threaded, Stainless Steel, Static/Dynamic Seal in receptacle
BJ8	Same as BJ except with Scoop-Proof Recessed pins
BN	Same as BJ except Electro-deposited Nickel Plated
BN8	Same as BN except with Scoop-Proof Recessed pins
BNK	Same as BN except Stainless Steel Firewall

Step 2. Select a Shell Style

	Designates
-10	Bayonet Plug
-11	Threaded Straight Plug
-12	Threaded Non-Decoupling Plug
-17	Square Flange Receptacle
-19	Jam Nut (D-Hole Mount) Receptacle

Step 3. Select a Shell Modification

	Designates
E	360° Accessory Teeth per MS3155 Plug and Receptacle
F	360° Accessory Teeth per MS3155, EMI Grounding Spring on Plug only
G	3 Accessory Teeth, EMI Grounding Spring on Plug only

Step 4. Select a Shell Size & Insert Arrangement from chart on pg. 146.

Shell Size & Insert Arrangements are on page 146. First number represents Shell Size, second number is the Insert Arrangement.

Step 5. Select a Contact Type (Crimp)

	Designates
P	Pin Contacts
K	#20 Pins with #18 crimpwell
S	Socket Contacts
L	#20 Sockets with #18 crimpwell

Step 6. Alternate Contact Finish or without Contacts

	Designates
D	Gold per SAE AS39029*
E	Without contacts

Step 7. Select an Alternate Keying Position - Rotation of master key/keyway of shell.

Use N for normal. Use 06, 07, 08, 09 or Y for alternate keying positions. See page 146 for descriptions.

Step 8. Variations (Primarily Designed for General Electric)

	Designates
Y176	260°C per G.E. M50TF3564, Class B, No Accessory Teeth
Y185	Older style with 200°C Capability - European market (Superseded by Y163)
Y186	260°C Capability per G. E. M50TF3564 Class B**
Y188	200°C Capability per G. E. M50TF3564 Class A**

Another variation available with molding groove for potting - consult Amphenol Aerospace for ordering information.

* supersedes MIL-C-39029

** Also see Hermetic styles that meet G.E. specification M50TF3564, Classes A & B on page 156.

MIL-DTL-83723, Series III, Pyle®

How to Order – Boeing Designation (BACC63CM/CN*) or Pyle Commercial Equivalent

	1.	2.	3.	4.	5.	6.	7.	8.
MIL-DTL-83723, Series III	Connector Type	Shell Style	Boeing Spec. Qualified Shell Size	Shell Modification (Accessory Teeth)	Boeing Spec. Qualified Insert Arrangement	Contact Style	Alternate Keying Position of Shell	With Contacts Option
BOEING CO. DESIGNATION	BACC63	CM	18	B	14	P	8	A

	1.	3.	4.	5.	6.	7.	8.
Amphenol® Pyle® MIL-DTL-83723, Series III	Connector Type	Shell Style	Shell Modification (Accessory Teeth)	Shell Size/ Insert Arrangement	Contact Type	Alternate Contact Finish or Without Contacts	Alternate Keying Position of Shell	Varia-tion
PYLE COMMERCIAL EQUIV. TO BOEING BACC63CM/CN	BSK	-12	E	18-14	P	D	08	XXX

Step 1. Boeing Co. Designation

BACC63	Designates MIL-DTL-83723 Series III Boeing Designation BACC63CM/CN** Firewall Connectors

(Refer to military specification slash sheet number.)

** BACC63CM/CN supersedes BACC63BR/BT

Step 2. Select a Connector Type

	Designates
CM	Threaded, Non-Decoupling Plug Stainless Steel Firewall
CN	Threaded, Square Flange Receptacle, Stainless Steel Firewall

Step 3. Select a Boeing Specification Qualified Shell Size

12, 14, 16, 18, 20, 22, 24, 28

Step 4. Select a Shell Modification

	Designates
–	Accessory Teeth per MIL-DTL-83723, Series III (normally 3 teeth)
B	360° Accessory Teeth per MS3155 Plug and Receptacle
D	360° Accessory Teeth per MS3155,EMI Grounding Spring on Plug only

Step 5. Select a Boeing Specification Qualified Insert Arrangement

12-03, 14-04, 14-07, 16-10, 18-14, 20-16, 22-19, 24-30, 28-42 (these incorporate Boeing approved contacts)

Step 6. Select a Contact Type (Crimp)

	Designates
P	Pin Contacts, Gold plate per SAE AS39029*
S	Socket Contacts, Gold plate per SAE AS39029*

Step 7. Select an Alternate Keying Position - Rotation of master key/keyway of shell.

Use N for normal. Use 6, 7, 8, 9 or Y for alternate keying positions. See page 146 for descriptions.

Step 8. With Contacts Option

	Designates
A	With Contacts and Sealing Plugs (Letter 'A' to be used on purchase orders only, and will not appear on connector as part of connector part number.)
	Leave blank without contacts and sealing plugs

*supersedes MIL-C-39029

Step 1. Commercial Connector Type Designed to be Equivalent to Boeing BACC63

	Designates
BSK	Threaded with 'O' ring seal in receptacle

Step 2. Select a Shell Style

	Designates
-12	Threaded, Non-Decoupling Plug Stainless Steel Firewall
-17	Threaded, Square Flange Receptacle, Stainless Steel Firewall

Step 3. Select a Shell Modification

No designation needed for shells with accessory teeth per MIL-DTL-83723, Series III (normally 3 teeth).

	Designates
E	360° Accessory Teeth per MS3155 Plug and Receptacle
F	360° Accessory Teeth per MS3155, EMI Grounding Spring on Plug only

Step 4. Select a Shell Size & Insert Arrangement from chart on pg. 146.

Shell Sizes 12, 14, 18, 20, 24, 28 are available. Insert Arrangements for these size shells are given on page 146. Shell size and insert arrangement are written together. First number represents Shell Size, second number is the Insert Arrangement.

Step 5. Select a Contact Type (Crimp)

	Designates
P	Pin Contacts
S	Socket Contacts

Step 6. Alternate Contact Finish or without Contacts

	Designates
D	Gold per SAE AS39029*
E	Without contacts and sealing plugs

Step 7. Select an Alternate Keying Position - Rotation of master key/keyway of shell.

Omit for N for normal. Use 06, 07, 08, 09 or Y for alternate keying positions. See page 146 for descriptions.

Step 8. Variation

	Designates
Y126	Contact Marking per MIL-DTL-83723/33 & /34 (Required with BACC63CM/CN Series)

No variation suffix - connector will incorporate Mil-Spec AS39020 contacts

	1.	2.	3.	4.	5.	6.
MIL-DTL-83723, Series III	Connector Type	Service Class	Shell Style	Shell Size/Insert Arrangement	Contact Style	Alternate Keying Position of Shell
ASD DESIGNATION	EN2997	KE	6	16-24	F	6

Step 1. Select an ASD Designated/European Standards Connector Type

	Designates
EN2997	ASD Designation

Note: ASD supersedes AECMA Designation

Step 2. Select a Service Class

	Designates Standard Temperature Class
K	Threaded, Stainless Steel, 200°C
S	Threaded, Stainless Steel, EMI Grounding Spring on Plug, 200°C
Y	Stainless Steel Hermetic with Solderwell Contacts, 200°C
	Designates High Temperature Class
KE	Threaded, Stainless Steel Firewall, 260°C
SE	Threaded, Stainless Steel, EMI Grounding Spring on Plug, 260°C
YE	Stainless Steel Hermetic with Solderwell Contacts, 260°C

Step 3. Select a Shell Style

	Designates
0	Threaded, Square Flange Receptacle
1	Threaded, Solder Mount Receptacle, Hermetic only
6	Threaded Non-Decoupling Plug
7	Threaded Jam Nut (D-Hole Mount) Receptacle

Step 4. Select a Shell Size & Insert Arrangement from chart on pg. 146.

Shell Size & Insert Arrangements are on page 146. First number represents Shell Size, second number is the Insert Arrangement.

Step 5. Select a Contact Type (Crimp)

	Designates
M	Standard Pin Contacts
C	#20 Pins with #18 crimpwell
A	Pin Insert less Contacts
F	Standard Socket Contacts
D	#20 Sockets with #18 crimpwell
B	Socket Insert less Contacts

Step 6. Select an Alternate Keying Position - Rotation of master key/keyway of shell.

Use N for normal. Use 6, 7, 8, 9 or Y for alternate keying positions. See page 146 for descriptions.

MIL-DTL-83723, Series III, Pyle®

How to Order – Pyle Commercial Equivalents to ASD Designation/European Standards

	1.	2.	3.	4.	5.	6.	7.	8.	9.
Amphenol® Pyle® MIL-DTL-83723, Series III	Connector Type	Service Class	Shell Style	Shell Modification (Accessory Teeth)	Shell Size/ Insert Arrangement	Contact Type	Alternate Contact Finish or Without Contacts	Alternate Keying Pos. of Shell	Varia-tions
PYLE COMMERCIAL DESIGNED TO MEET ASD & EUROPEAN STDS.	BT	G	-12	E	18-14	P	D	08	XXX

Step 1. Select a Commercial Connector Type Designed to Meet ASD/European Standards

	Designates
BT	Threaded with 'O' ring seal in receptacle
BJ	Threaded, Stainless Steel, Static/Dynamic Seal in receptacle

Step 2. Select a Service Class

	Designates
G	Stainless steel
K	Stainless steel Firewall

Step 3. Select a Shell Style

	Designates
-12	Threaded, Non-Decoupling Plug
-17	Threaded, Square Flange Receptacle
-19	Threaded, Jam Nut (D-Hole Mount) Receptacle

Step 4. Select a Shell Modification

No designation needed for shells with accessory teeth per MIL-DTL-83723, Series III (normally 3 teeth).

	Designates
E	360° Accessory Teeth per MS3155 Plug and Receptacle
F	360° Accessory Teeth per MS3155, EMI Grounding Spring on Plug only

Step 5. Select a Shell Size & Insert Arrangement from chart on pg. 146.

Shell Size & Insert Arrangements are on page 146. First number represents Shell Size, second number is the Insert Arrangement.

Step 6. Select a Contact Type (Crimp)

	Designates
P	Pin Contacts
S	Socket Contacts

Step 7. Alt. Contact Finish or without Contacts

	Designates
D	Gold per SAE AS39029*
E	Without contacts

Step 8. Select an Alternate Keying Position - Rotation of master key/keyway of shell.

Use N for normal. Use 06, 07, 08, 09 or Y for alternate keying positions. See page 146 for descriptions.

Step 9. Variations (Designed for Meeting European Specifications)

	Designates
Y144	260°C Capability (Euro Market)
Y163	200°C Capability (Euro Market)
Y175	Older designation superseded by Y144

*supersedes MIL-C-39029

MIL-DTL-83723, Series III, Pyle®

How to Order – ESC10/11 for SBAC and Rolls Royce Standards

	1.	2.	3.	4.	5.	6.	7.
	Connector Type	Service Class	Shell Style	Shell Size/ Insert Arrangement	Contact Type	Alternate Keying Position of Shell	Variations
MIL-DTL-83723, Series III MEETS SOCIETY OF BRITISH AEROSPACE CO./ ROLLS ROYCE STANDARDS	ESC10	KE	0	16-24	S	6	X

Step 1. Select a Connector Type that Meets European Specifications for Society of British Aerospace Co./Rolls Royce Standards

	Designates
ESC10	Threaded, Basic High Temperature Connector, 260°C Firewall
ESC11	Threaded, High Temperature Connector (260°C Firewall) with 100% Scoop-Proof Recessed Pins

Step 2. Select a Service Class

	Designates High Temperature Class
KE	Threaded, Stainless Steel Firewall, 260°C
SE	Threaded, Stainless Steel, EMI Grounding Spring on Plug, 260°C
YE	Threaded, Stainless Steel Hermetic with Solderwell Contacts, 260°C

Step 3. Select a Shell Style

	Designates
0	Threaded, Square Flange Receptacle with 360° Accessory Teeth per MS3155
1	Threaded, Hermetic Solder Mount Receptacle
2	Threaded, Hermetic Square Flange Receptacle
3	Threaded, Hermetic Jam Nut (D-Hole Mount) Receptacle
6	Threaded, Non-Decoupling Plug with 360° Accessory Teeth per MS3155

Step 4. Select a Shell Size & Insert Arrangement from chart on pg. 146.

Shell Size & Insert Arrangements are on page 146. First number represents Shell Size, second number is the Insert Arrangement.

Step 5. Select a Contact Type (Crimp)

	Designates
P	Pin Contacts
S	Socket Contacts

All connectors are supplied without contacts except Shell Styles 1, 2 and 3

Step 7. Select an Alternate Keying Position - Rotation of master key/keyway of shell.

Use N for normal. Use 6, 7, 8, 9 or Y for alternate keying positions. See page 146 for descriptions.

Step 8. Variations

	Designates
O (Alpha)	Basic Connector, no Variations
A	Lockwire Holes on Plug

MIL-DTL-83723, Series III, Pyle®

How to Order – Pyle Commercial Equivalent to ESC11 European Specifications – Scoop-Proof only

	1.	2.	3.	4.	5.	6.	7.
MIL-DTL-83723, Series III	Connector Type	Shell Style	Shell Size/ Insert Arrangement	Contact Type	Contact Finish	Alternate Keying Position of Shell	Variations
COMMERCIAL	HTK	12	16-24	S	D	06	XXXX

Step 1. Select a Commercial Connector Type Equivalent to ESC11 European Specifications

	Designates
HTK	Threaded, Basic ESC-11, Class K (Choice of temperature rating 260° or 200° is in the Variations for this part number).
HNK	Same as HTK except Electroless Nickel Plated
HSK	Same as HTK, except this is a special designator for Boeing Company

Step 2. Select a Shell Style

	Designates
-12	Threaded Non-Decoupling Plug with 100% Scoop-Proof Recessed Pins
-17	Square Flange Receptacle with 100% Scoop-Proof Recessed Pins

Step 3. Select a Shell Size & Insert Arrangement.

Shell Sizes 12, 14, 18, 20, 24, 28 are available.
Insert Arrangements for these size shells are given on page 146. Shell size and insert arrangement are written together. First number represents Shell Size, second number is the Insert Arrangement.

Step 4. Select a Contact Type (Crimp)

	Designates
P	Pin Contacts
S	Socket Contacts

Step 5. Select a Contact Finish or without Contacts

	Designates
D	Gold per AS39029*
E	Socket Contacts

Special High Temperature Contacts are another option - consult Amphenol Aerospace for ordering information.

Step 6. Select an Alternate Keying Position - Rotation of master key/keyway of shell.

Use N for normal. Use 06, 07, 08, 09 or Y for alternate keying positions. See page 146 for descriptions.

Step 7. Variations

	Designates
Y144	260°C
Y163	200°C

*supersedes MIL-C-39029

MIL-DTL-83723, Series III, Pyle®

How to Order – Hermetic, Military or Pyle Commercial

	1. Connector Type	2. Connector Style and Contact Type (Crimp)	3. Service Class	4. Shell Size/ Insert Arrangement	5. Alternate Keying Position of Shell
MIL-DTL-83723, Series III					
MILITARY HERMETIC	M83723	/88	y	16-24	6

	1. Connector Style	2. Shell Style	3. Shell Size/ Insert Arrangement	4. Contact Type	5. Contact Style	6. Alternate Contact Finish	7. Alternate Keying Position of Shell	8. Variations
Amphenol® Pyle® MIL-DTL-83723, Series III								
COMMERCIAL HERMETIC	BTY	-17	16-24	S	1	D	06	XXXX

Step 1. Military Connector Type

M83723	Designates MIL-DTL-83723 Series III Connectors

Step 2. Select a Military Hermetic Connector Style

(Refer to military specification slash sheet number.)

	Designates
/88	Hermetic, Threaded Square Flange Receptacle
/89	Hermetic, Threaded Jam Nut (D-Hole Mount) Receptacle
/90	Hermetic, Threaded Solder Mounted Receptacle

Step 3. Select a Service Class

	Designates
Y	Hermetic, Stainless Steel, 200°C, with Solderwell Contacts
P	Hermetic, Stainless Steel, 200°C, with Eyelet Contacts

For availability of a Plated Steel Shell, consult Amphenol Aerospace.

Step 4. Select a Shell Size & Insert Arrangement from chart on pg. 146. (except sizes 24 and 28 are not available in Hermetic Styles.)

Shell Size & Insert Arrangements are on page 146. First number represents Shell Size, second number is the Insert Arrangement

Step 5. Select an Alternate Keying Position - Rotation of master key/keyway of shell.

Use N for normal. Use 6, 7, 8, 9 or Y for alternate keying positions. See page 146 for descriptions.

Step 1. Select a Commercial Hermetic Connector Style

	Designates
BTY	Hermetic, Threaded, Stainless Steel, with 'O' ring seal
BFY	Hermetic, Threaded, Stainless Steel, with Static/Dynamic Seal
BNY	Hermetic, Threaded, Stainless Steel, Electro-deposited Nickel plated, with Static/Dynamic Seal

Step 2. Select a Shell Style

	Designates
-17	Square Flange Receptacle
-19	Jam Nut (D-Hole Mount) Receptacle
-14	Solder Mounted Receptacle

Step 3. Select a Shell Size & Insert Arrangement from chart on pg. 146. (except sizes 24 and 28 are not available in Hermetic Styles).

Shell Size & Insert Arrangements are on page 146. First number represents Shell Size, second number is the Insert Arrangement

Step 4. Select a Contact Type (Crimp)

	Designates
P	Pin Contacts

Step 5. Select a Contact Style

	Designates
1	Solderwell Contacts (Mil-Spec Type)
4	Eyelet Contacts

Step 6. Alternate Contact Finish

	Designates
D	.000050 (per MIL-DTL-83723, III) Gold
V	.000100 Gold

Step 7. Select an Alternate Keying Position - Rotation of master key/keyway of shell.

Omit for normal. Use 06, 07, 08, 09 or Y for alternate keying positions. See page 146 for descriptions.

Step 8. Variations

	Designates
Y144	260°C Capability (Euro Market)
Y163	200°C Capability (Euro Market)
Y186	260°C Capability per G.E. M50TF3564, Class B
Y188	200°C Capability per G.E. M50TF3564, Class A

MIL-DTL-83723, Series III, Pyle®

Square Flange Receptacle, Threaded Coupling

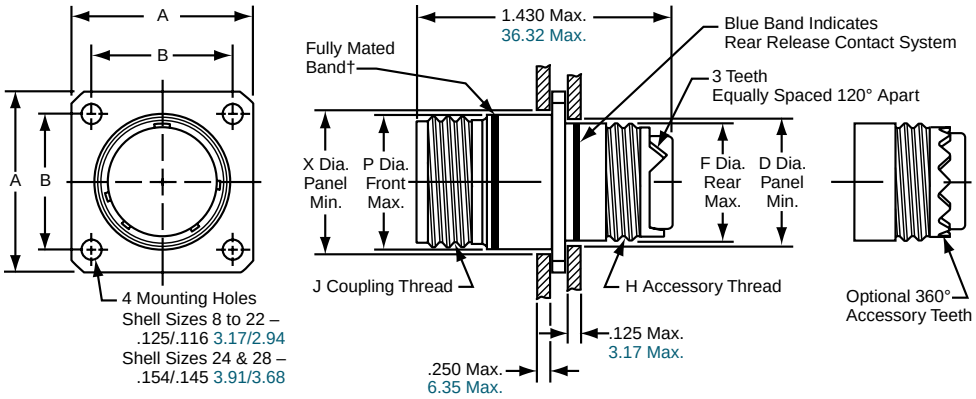

PART #

M83723/82 / M83723/83
BT( )-17
BJ/BJ8/BN/BN8/BNK-17
BACC63CN
BSK-17
EN2997( )0
BT( )/BJ( )-17
ESC10( )0
ESC11( )0
HTK/HNK/HSK-17

† When fully mated with plug this band will be covered. (Band is red on military types; can be red or blue on commercial types).

See Quick Reference page 140 for the variety of ordering options for square flange receptacles with threaded coupling.

The How to Order pages (149-156) give complete part number breakdowns.

Inches

Shell Size	A ±.005	B ±.005	D Dia. Panel Min.	F Dia. Rear Max.	H Accessory Thread Class 2A	J Coupling Thread Class 2A	P Dia. Front Max.	X Dia. Panel Min.
8	.812	.594	.510	.500	.5000-20 UNF	.5625-24 UNF	.562	.620
10	.937	.719	.635	.625	.6250-24 UNEF	.6875-24 UNEF	.696	.748
12	1.031	.812	.760	.750	.7500-20 UNEF	.8750-20 UNEF	.875	.913
14	1.125	.906	.885	.875	.8750-20 UNEF	.9375-20 UNEF	.936	.980
16	1.250	.969	1.010	1.000	1.0000-20 UNEF	1.0625-18 UNEF	1.062	1.107
18	1.343	1.062	1.072	1.062	1.0625-18 UNEF	1.1875-18 UNEF	1.187	1.209
20	1.437	1.156	1.192	1.187	1.1875-18 UNEF	1.3125-18 UNEF	1.312	1.337
22	1.562	1.250	1.322	1.312	1.3125-18 UNEF	1.4375-18 UNEF	1.437	1.452
24	1.703	1.375	1.447	1.437	1.4375-18 UNEF	1.5625-18 UNEF	1.562	1.577
28	1.953	1.562	1.760	1.750	1.7500-18 UNEF	1.8125-16 UNEF	1.812	1.827

Millimeters

Shell Size	A ±.005	B ±.005	D Dia. Panel Min.	F Dia. Rear Max.	P Dia. Front Max.	X Dia. Panel Min.
8	20.62	15.09	12.95	12.70	14.27	15.75
10	23.80	18.26	16.13	15.88	17.68	18.99
12	26.19	20.62	19.30	19.05	22.23	23.19
14	28.58	23.01	22.48	22.23	23.77	24.89
16	31.75	24.61	25.65	25.40	26.97	28.12
18	34.11	26.97	27.23	26.97	30.15	30.71
20	36.50	29.36	30.28	30.15	33.32	33.96
22	39.67	31.75	33.58	33.32	36.50	36.88
24	43.26	34.93	36.75	36.50	39.67	40.06
28	49.61	39.67	44.70	44.45	46.02	46.41

Shell sizes 8 and 10 are not available in Boeing BACC63 styles and commercial ESC11 styles.

Bayonet style square flange receptacles are shown on page 160.
Hermetic threaded style square flange receptacles are shown on page 163.

All dimensions for reference only.

MIL-DTL-83723, Series III, Pyle®

Jam Nut (D-Hole Mount) Receptacle, Threaded Coupling

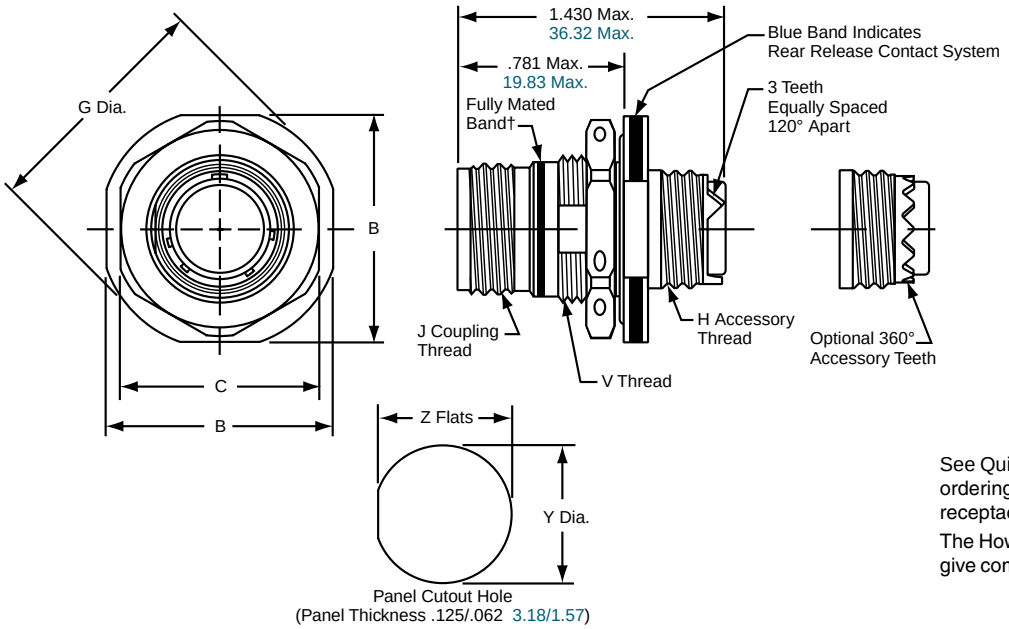

PART #

M83723/84 / M83723/85

BT( )-19

BJ/BJ8/BN/BN8/BNK-19

EN2997( )7

BT( )/BJ( )-19

See Quick Reference page 141 for the variety of ordering options for jam nut (D-hole mount) receptacles with threaded coupling.

The How to Order pages (149, 150, 152, 153) give complete part number breakdowns.

† When fully mated with plug this band will be covered. (Band is red on military types; can be red or blue on commercial types).

Inches

Shell Size	B Max.	C Hex Max.	G Dia. Max.	H Accessory Thread Class 2A	J Coupling Thread Class 2A	V Thread Class 2A	Y Dia. ±.005	Z Flats ±.005
8	.979	.828	1.068	.5000-20 UNF	.5625-24 UNF	.6250-20 UNEF	.635	.605
10	1.104	.953	1.192	.6250-24 UNEF	.6875-24 UNEF	.7500-20 UNEF	.760	.730
12	1.291	1.140	1.380	.7500-20 UNEF	.8750-20 UNEF	.9380-20 UNEF	.947	.917
14	1.391	1.205	1.505	.8750-20 UNEF	.9375-20 UNEF	1.0000-20 UNEF	1.010	.980
16	1.516	1.329	1.630	1.0000-20 UNEF	1.0625-18 UNEF	1.1250-18 UNEF	1.135	1.105
18	1.641	1.455	1.756	1.0625-18 UNEF	1.1875-18 UNEF	1.2500-18 UNEF	1.260	1.225
20	1.766	1.574	1.860	1.1875-18 UNEF	1.3125-18 UNEF	1.3750-18 UNEF	1.385	1.350
22	1.954	1.705	2.068	1.3125-18 UNEF	1.4375-18 UNEF	1.5000-18 UNEF	1.510	1.475
24	2.074	1.830	2.160	1.4375-18 UNEF	1.5625-18 UNEF	1.6250-18 UNEF	1.635	1.600
28	2.329	2.080	–	1.7500-18 UNEF	1.8125-16 UNEF	1.8750-20 UNEF	1.885	1.850

Millimeters

Shell Size	B Max.	C Hex Max.	G Dia. Max.	Y Dia. ±.13	Z Flats ±.13
8	24.87	21.03	27.13	16.13	15.37
10	28.04	24.21	30.28	19.30	18.54
12	32.79	28.96	35.05	24.05	23.29
14	35.33	30.61	38.23	25.65	24.89
16	38.51	33.76	41.40	28.83	28.07
18	41.68	36.96	44.60	32.00	31.12
20	44.86	39.98	47.24	35.18	34.29
22	49.63	43.31	52.53	38.35	37.47
24	52.68	46.48	80.26	41.53	40.64
28	59.16	52.83	–	47.88	46.99

No Boeing Designated jam nut receptacles.

Bayonet style jam nut receptacles shown on page 161.

Hermetic threaded style jam nut receptacles shown on page 164.

All dimensions for reference only.

MIL-DTL-83723, Series III, Pyle®

Straight Plug and Non-Decoupling Plug, Threaded Coupling

Amphenol Aerospace

Straight Plug

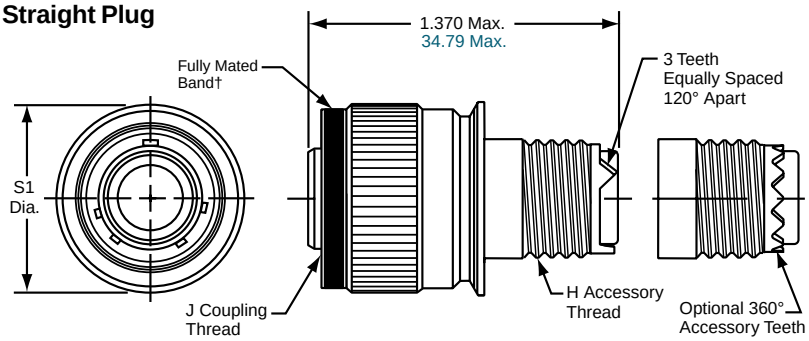

Non-Decoupling Plug

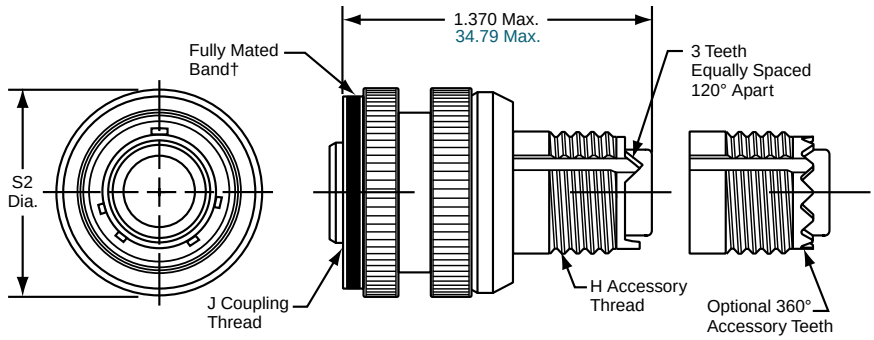

† When fully mated with receptacle this band will be covered. (Band is red on military types; can be red or blue on commercial types).

Inches

Shell Size	H Accessory Thread Class 2A	J Coupling Thread Class 2A	S1 Dia. Max.	S2 Dia. Max.
8	.5000-20 UNF	.5625-24 UNF	.776	.832
10	.6250-24 UNEF	.6875-24 UNEF	.906	.958
12	.7500-20 UNEF	.8750-20 UNEF	1.078	1.090
14	.8750-20 UNEF	.9375-20 UNEF	1.141	1.203
16	1.0000-20 UNEF	1.0625-18 UNEF	1.266	1.326
18	1.0625-18 UNEF	1.1875-18 UNEF	1.375	1.432
20	1.1875-18 UNEF	1.3125-18 UNEF	1.500	1.557
22	1.3125-18 UNEF	1.4375-18 UNEF	1.625	1.682
24	1.4375-18 UNEF	1.5625-18 UNEF	1.750	1.817
28	1.7500-18 UNEF	1.8125-16 UNEF	2.000	2.122

Millimeters

Shell Size	S1 Dia. Max.	S2 Dia. Max.
8	19.71	21.13
10	23.01	24.33
12	27.38	27.68
14	28.98	30.55
16	32.15	33.68
18	34.92	36.37
20	38.10	39.54
22	41.27	42.72
24	44.45	46.15
28	50.80	53.89

All dimensions for reference only.

Shell sizes 8 and 10 are not available in Boeing BACC63 styles and commercial ESC11 styles.

Boeing designations are in non-decoupling plugs only; not in straight plug designations.

ASD and European/ESC10 or ESC11 are in non-decoupling plugs only, not in straight plug designations.

Bayonet style straight plugs shown on page 162. Bayonet style non-decoupling plugs are not available.

PART # STRAIGHT PLUG

M83723/86 / M83723/87

BT( )-11

BJ/BJ8/BN/BN8/BNK-11

See Quick Reference page 142 for the variety of ordering options for straight plugs with threaded coupling.

The How to Order pages (149, 150,153) give complete part number breakdowns.

PART # NON-DECOUPLING PLUG

M83723/95 / M83723/96

M83723/97 / M83723/98

BT( )-12

BJ/BJ8/BN/BN8/BNK-12

BACC63CM

BSK-12

EN2997( )6

BT( )/BJ( )-12

ESC10( )6

ESC11( )6

HTK/HNK/HSK-12

See Quick Reference page 142 for the variety of ordering options for non-decoupling plugs with threaded coupling.

The How to Order pages (149-156) give complete part number breakdowns.

MIL-DTL-83723, Series III, Pyle®

Square Flange Receptacle, Bayonet Coupling

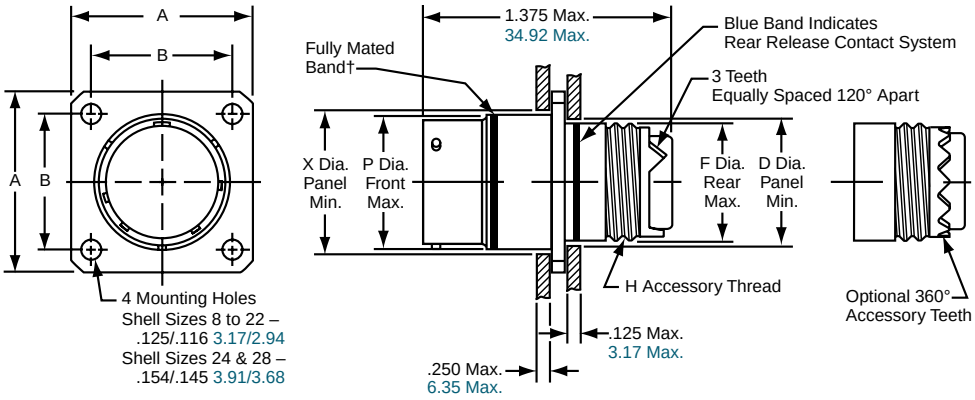

PART #

M83723/71 / M83723/72

BY( )-17

See Quick Reference page 143 for the variety of ordering options for square flange receptacles with bayonet coupling.

The How to Order page 149 gives complete part number breakdowns.

† When fully mated with plug this band will be covered. (Band is red on military types; can be red or blue on commercial types).

Inches

Shell Size	A ±.005	B ±.005	D Dia. Panel Min.	F Dia. Rear Max.	H Accessory Thread Class 2A	P Dia. Front Max.	X Dia. Panel Min.
8	.812	.594	.510	.500	.5000-20 UNF	.562	.620
10	.937	.719	.635	.625	.6250-24 UNEF	.696	.748
12	1.031	.812	.760	.750	.7500-20 UNEF	.875	.913
14	1.125	.906	.885	.875	.8750-20 UNEF	.936	.980
16	1.250	.969	1.010	1.000	1.0000-20 UNEF	1.062	1.107
18	1.343	1.062	1.072	1.062	1.0625-18 UNEF	1.187	1.209
20	1.437	1.156	1.192	1.187	1.1875-18 UNEF	1.312	1.337
22	1.562	1.250	1.322	1.312	1.3125-18 UNEF	1.437	1.452
24	1.703	1.375	1.447	1.437	1.4375-18 UNEF	1.562	1.577

Millimeters

Shell Size	A ±.005	B ±.005	D Dia. Panel Min.	F Dia. Rear Max.	P Dia. Front Max.	X Dia. Panel Min.
8	20.62	15.04	12.95	12.70	14.27	15.75
10	23.80	18.26	16.13	15.88	17.68	18.99
12	26.19	20.62	19.30	19.05	22.23	23.19
14	28.58	23.01	22.48	22.23	23.77	24.89
16	31.75	24.61	25.65	25.40	26.97	28.12
18	34.11	26.97	27.23	26.97	30.15	30.71
20	36.50	29.36	30.28	30.15	33.32	33.96
22	39.67	31.75	33.58	33.32	36.50	36.88
24	43.26	34.93	36.75	36.50	39.67	40.06

Bayonet coupling connectors are offered in Military 83723 and Commercial equivalent designations. They are not included in Boeing, GE, ASD and other European specified connectors.

Shell size 28 is not available in Bayonet coupling connectors.

All dimensions for reference only.

MIL-DTL-83723, Series III, Pyle®

Jam Nut (D-Hole Mount) Receptacle, Bayonet Coupling

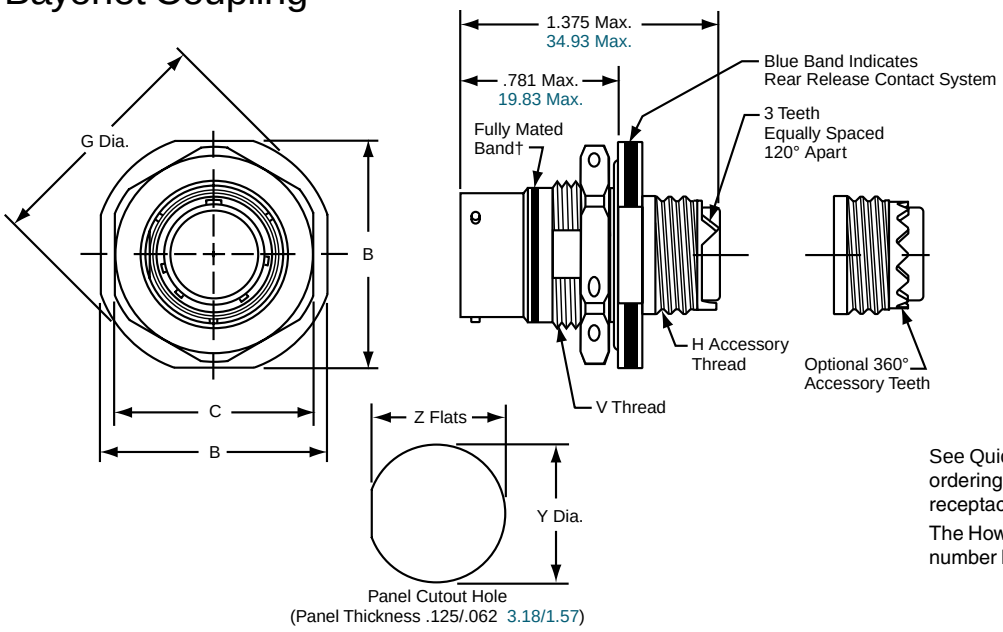

PART #

M83723/73 / M83723/74

BY( )-19

See Quick Reference page 143 for the variety of ordering options for jam nut D-hole mount receptacles with bayonet coupling.

The How to Order page 149 gives complete part number breakdowns.

† When fully mated with plug this band will be covered. (Band is red on military types; can be red or blue on commercial types).

Inches

Shell Size	B Flats Max.	C Hex Max.	G Dia. Max.	H Accessory Thread Class 2A	V Thread Class 2A	Y Dia. ±.005	Z Flats ±.005
8	.979	.828	1.068	.5000-20 UNF	.6250-20 UNEF	.635	.605
10	1.104	.953	1.192	.6250-24 UNEF	.7500-20 UNEF	.760	.730
12	1.291	1.140	1.380	.7500-20 UNEF	.9380-20 UNEF	.947	.917
14	1.391	1.205	1.505	.8750-20 UNEF	1.0000-20 UNEF	1.010	.980
16	1.516	1.329	1.630	1.0000-20 UNEF	1.1250-20 UNEF	1.135	1.105
18	1.641	1.455	1.756	1.0625-18 UNEF	1.2500-18 UNEF	1.260	1.225
20	1.766	1.574	1.860	1.1875-18 UNEF	1.3750-18 UNEF	1.385	1.350
22	1.954	1.705	2.068	1.3125-18 UNEF	1.5000-18 UNEF	1.510	1.475
24	2.074	1.830	2.160	1.4375-18 UNEF	1.6250-18 UNEF	1.635	1.600

Millimeters

Shell Size	B Flats Max.	C Hex Max.	G Dia. Max.	Y Dia. ±.13	Z Flats ±.13
8	24.87	21.03	27.13	16.13	15.37
10	28.04	24.21	30.28	19.30	18.54
12	32.79	28.96	35.05	24.05	23.29
14	35.33	30.61	38.23	25.65	24.89
16	38.51	33.76	41.40	28.83	28.07
18	41.68	36.96	44.60	32.00	31.12
20	44.86	39.98	47.24	35.18	34.29
22	49.63	43.31	52.53	38.35	37.47
24	52.68	46.48	80.26	41.53	40.64

Bayonet coupling connectors are offered in Military 83723 and Commercial equivalent designations. They are not included in Boeing, GE, ASD and other European specified connectors.

Shell size 28 is not available in Bayonet coupling connectors.

All dimensions for reference only.

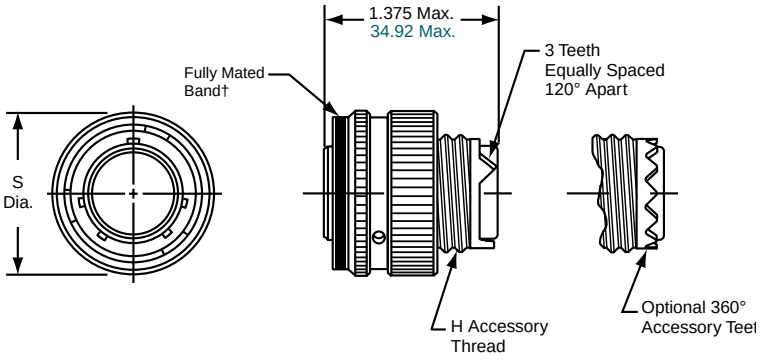

PART #

M83723/75 / M83723/76

BY( )-10

† When fully mated with receptacle this band will be covered. (Band is red on military types; can be red or blue on commercial types).

See Quick Reference page 143 for the variety of ordering options for straight plugs with bayonet coupling.

The How to Order page 149 gives complete part number breakdowns.

Inches

Shell Size	H Accessory Thread Class 2A	S Dia. Max.
8	.5000-20 UNF	.765
10	.6250-24 UNEF	.906
12	.7500-20 UNEF	1.078
14	.8750-20 UNEF	1.125
16	1.0000-20 UNEF	1.266
18	1.0625-18 UNEF	1.375
20	1.1875-18 UNEF	1.505
22	1.3125-18 UNEF	1.625
24	1.4375-18 UNEF	1.755

Millimeters

Shell Size	S Dia. Max.
8	19.43
10	23.01
12	27.38
14	28.57
16	32.15
18	34.92
20	38.22
22	41.27
24	44.57

Bayonet coupling connectors are offered in Military 83723 and Commercial equivalent designations. They are not included in Boeing, GE, ASD and other European specified connectors.

Shell size 28 is not available in Bayonet coupling connectors.

All dimensions for reference only.

MIL-DTL-83723, Series III, Pyle®

Hermetic Square Flange Mount Receptacle, Threaded Coupling

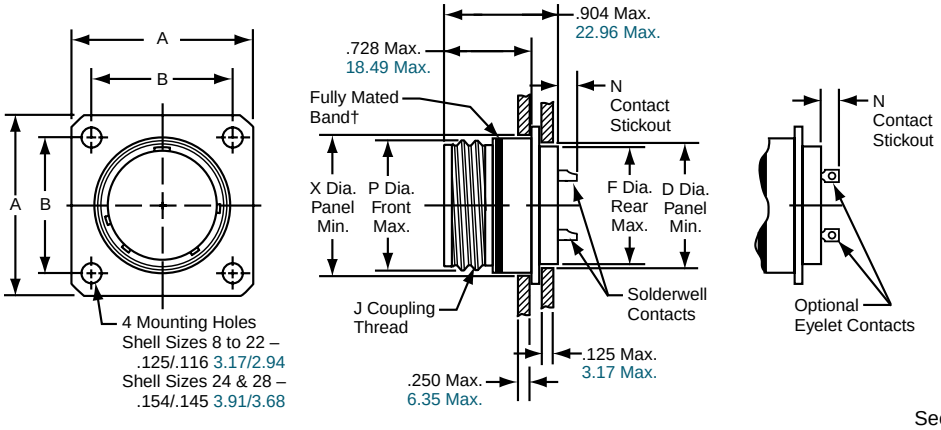

† When fully mated with plug this band will be covered. (Band is red on military types; can be red or blue on commercial types).

PART #

M83723/88Y / M83723/88P

BTY/BFY/BNY-17

EN2997Y0 / YE0

ESC10YE2

ESC11YE2

See Quick Reference page 144 for the variety of ordering options for hermetic square flange mount receptacles with threaded coupling.

The How to Order pages (152, 154, 156) give complete part number breakdowns.

Inches

Shell Size	A ±.010	B ±.005	D Dia. Panel Min.	F Dia. Rear Max.	J Coupling Thread Class 2A	N Contact Stickout		P Dia. Front Max.	X Dia. Panel Min.
						Size 20 Contacts	Size 12 & 16 Contacts		
8	.812	.594	.510	.500	.5625-24 UNF	.194 / .134	.224 / .164	.562	.572
10	.937	.719	.635	.625	.6875-24 UNEF	.194 / .134	.224 / .164	.696	.706
12	1.031	.812	.760	.750	.8750-20 UNEF	.194 / .134	.224 / .164	.875	.885
14	1.125	.906	.885	.875	.9375-20 UNEF	.194 / .134	.224 / .164	.936	.946
16	1.250	.969	1.010	1.000	1.0625-18 UNEF	.194 / .134	.224 / .164	1.062	1.072
18	1.343	1.062	1.072	1.062	1.1875-18 UNEF	.194 / .134	.224 / .164	1.187	1.197
22	1.562	1.250	1.322	1.312	1.4375-18 UNEF	.194 / .134	.224 / .164	1.437	1.447

Millimeters

Shell Size	A ±.25	B ±.13	D Dia. Panel Min.	F Dia. Rear Max.	P Dia. Front Max.	X Dia. Panel Min.
8	20.62	15.09	12.95	12.70	14.27	15.75
10	23.80	18.26	16.13	15.88	17.68	18.99
12	26.19	20.62	19.30	19.05	22.23	23.19
14	28.58	23.01	22.48	22.23	23.77	24.89
16	31.75	24.61	25.65	25.40	26.97	28.12
18	34.11	26.97	27.23	26.97	30.15	30.71
22	39.67	31.75	33.58	33.32	36.50	36.88

Hermetic style receptacles are not included in Boeing designations.
Commercial hermetics meet some European and GE specifications.
Hermetic styles are threaded coupling only.
Shell sizes 20, 24 and 28, consult Amphenol for availability.
All dimensions for reference only.

MIL-DTL-83723, Series III, Pyle®

Hermetic Jam Nut (D-Hole Mount) Receptacle, Threaded Coupling

PART #

M83723/89Y / M83723/89P

BTY/BFY/BNY-19

EN2997Y7 / YE7

ESC10YE3

ESC11YE3

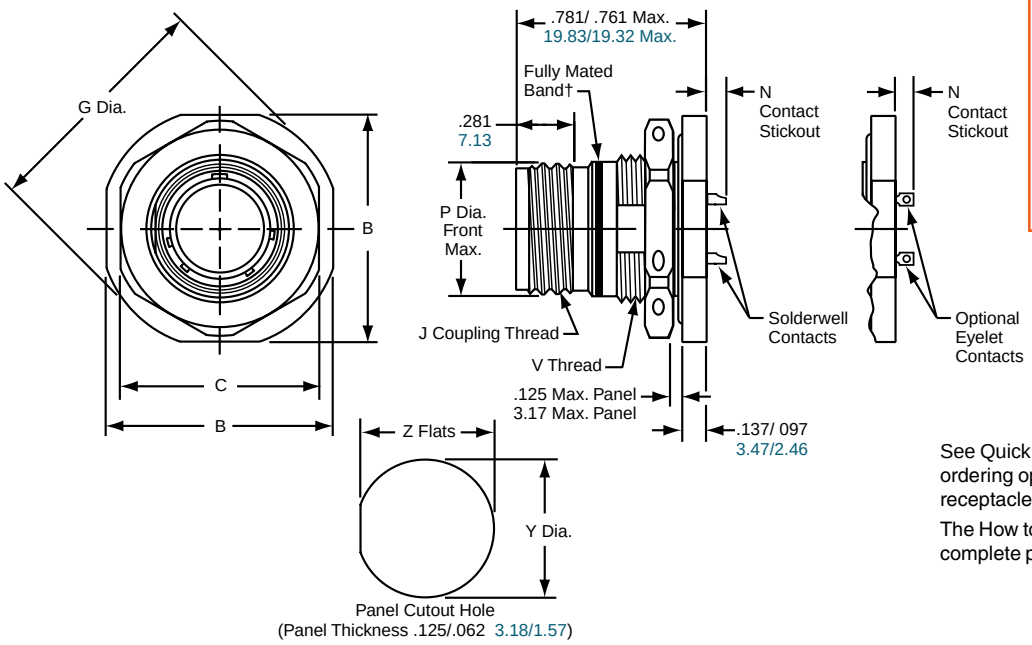

See Quick Reference page 144 for the variety of ordering options for hermetic jam nut D-hole mount receptacles with threaded coupling.

The How to Order pages (152, 154, 156) give complete part number breakdowns.

† When fully mated with plug this band will be covered. (Band is red on military types; can be red or blue on commercial types).

Inches

Shell Size	B Flats Max.	C Hex Max.	G Dia. Max.	J Coupling Thread Class 2A	N Contact Stickout		P Dia. Front Max.	V Thread Class 2A	Y Dia. ±.005	Z Flats ±.005
					Size 20 Contacts	Size 12 & 16 Contacts				
8	.980	.828	1.068	.5625-24 UNF	.180 / .120	.210 / .150	.562	.6250-20 UNF	.635	.605
10	1.104	.953	1.192	.6875-24 UNEF	.180 / .120	.210 / .150	.696	.7500-20 UNEF	.760	.730
12	1.291	1.140	1.380	.8750-20 UNEF	.180 / .120	.210 / .150	.875	.9380-20 UNEF	.947	.917
14	1.391	1.205	1.505	.9375-20 UNEF	.180 / .120	.210 / .150	.936	1.0000-20 UNEF	1.010	.980
16	1.516	1.329	1.630	1.0625-18 UNEF	.180 / .120	.210 / .150	1.062	1.1250-18 UNEF	1.135	1.105
18	1.641	1.455	1.756	1.1875-18 UNEF	.180 / .120	.210 / .150	1.187	1.2500-18 UNEF	1.260	1.225
22	1.954	1.705	2.068	1.4375-18 UNEF	.180 / .120	.210 / .150	1.437	1.5000-18 UNEF	1.510	1.475

Millimeters

Shell Size	B Flats Max.	C Hex Max.	G Dia. Max.	N Contact Stickout		P Dia. Front Max.	Y Dia. ±.13	Z Flats ±.13
				Size 20 Contacts	Size 12 &16 Contacts			
8	24.89	21.03	27.13	4.57 / 3.05	5.33 / 3.81	14.27	16.13	15.37
10	28.04	24.21	30.28	4.57 / 3.05	5.33 / 3.81	17.68	19.30	18.54
12	32.79	28.96	35.05	4.57 / 3.05	5.33 / 3.81	22.23	24.05	23.29
14	35.33	30.61	38.23	4.57 / 3.05	5.33 / 3.81	23.77	25.65	24.89
16	38.51	33.76	41.40	4.57 / 3.05	5.33 / 3.81	26.97	28.83	28.07
18	41.68	36.96	44.60	4.57 / 3.05	5.33 / 3.81	30.15	32.00	31.12
22	49.63	43.31	52.53	4.57 / 3.05	5.33 / 3.81	36.47	38.35	37.47

Hermetic style receptacles are not included in Boeing designations.
Commercial hermetics meet some European and GE specifications.
Hermetic styles are threaded coupling only.
Shell sizes 20, 24 and 28, consult Amphenol for availability.
All dimensions for reference only.

MIL-DTL-83723, Series III, Pyle®

Hermetic Solder Mount/Weld Mount Receptacle, Threaded Coupling

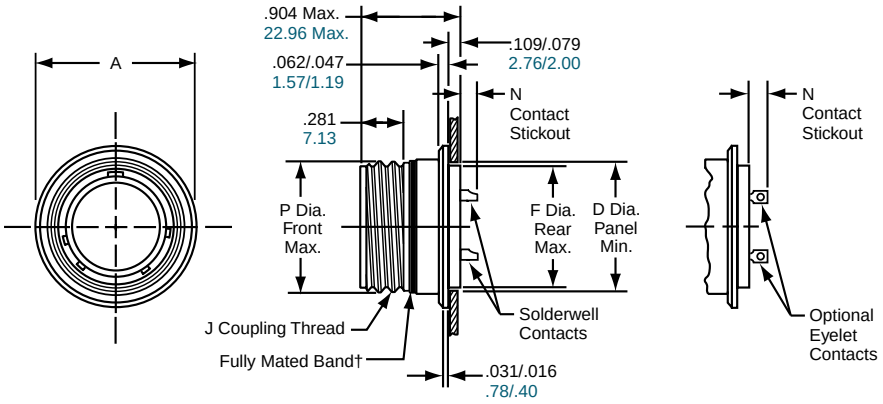

PART #

M83723/90Y / M83723/90P

BTY/BFY/BNY-14

EN2997Y1 / YE1

ESC10YE1

ESC11YE1

See Quick Reference page 144 for the variety of ordering options for hermetic solder mount / weld mount receptacles with threaded coupling.

The How to Order pages (152, 154, 156) give complete part number breakdowns.

† When fully mated with plug this band will be covered. (Band is red on military types; can be red or blue on commercial types).

Inches

Shell Size	A Dia. ±.010	D Dia. Panel Min.	F Dia. Rear Max.	J Coupling Thread Class 2A	N Contact Stickout		P Dia. Front Max.
					Size 20 Contacts	Size 12 & 16 Contacts	
8	.713	.510	.500	.5625-24 UNF	.194 / .134	.224 / .164	.562
10	.840	.572	.562	.6875-24 UNEF	.194 / .134	.224 / .164	.696
12	1.045	.760	.750	.8750-20 UNEF	.194 / .134	.224 / .164	.875
14	1.090	.822	.812	.9375-20 UNEF	.194 / .134	.224 / .164	.936
16	1.210	.947	.937	1.0625-18 UNEF	.194 / .134	.224 / .164	1.062
18	1.340	1.072	1.062	1.1875-18 UNEF	.194 / .134	.224 / .164	1.187
22	1.562	1.322	1.312	1.4375-18 UNEF	.194 / .134	.224 / .164	1.437

Millimeters

Shell Size	A Dia. ±.25	D Dia. Panel Min.	F Dia. Rear Max.	P Dia. Front Max.
8	18.11	12.95	12.70	14.27
10	21.34	14.53	14.27	17.68
12	26.54	19.30	19.05	22.23
14	27.69	20.88	20.62	23.77
16	30.73	24.05	23.80	26.97
18	34.04	27.23	26.97	30.15
22	39.67	33.58	33.32	36.50

Hermetic style receptacles are not included in Boeing designations.
Commercial hermetics meet some European and GE specifications.
Hermetic styles are threaded coupling only.
Shell sizes 20, 24 and 28, consult Amphenol for availability.
All dimensions for reference only.

STANDARD CRIMP CONTACTS - PIN
PART NUMBERS / COLOR BANDS

Contact Size	Pin MS Spec Number	Pin Pyle Part Number	Pin Color Bands		
			1st Band	2nd Band	3rd Band
20	M39029/4-110	BA-4020-36LD	Brown	Brown	Black
16	M39029/4-111	BA-4016-36LD	Brown	Brown	Brown
12	M39029/4-113	BA-4012-36LD	Brown	Brown	Orange

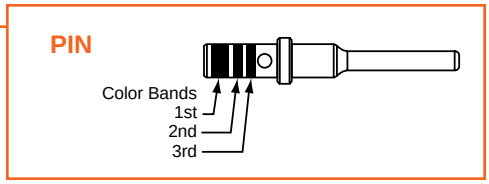

STANDARD CRIMP CONTACTS - SOCKET
PART NUMBERS / COLOR BANDS

Contact Size	Socket MS Spec Number	Socket Pyle Part Number	Socket Color Bands		
			1st Band	2nd Band	3rd Band
20	M39029/5-115	BA-4120-36LD	Brown	Brown	Green
16	M39029/5-116	BA-4116-36LD	Brown	Brown	Blue
12	M39029/5-118	BA-4112-36LD	Brown	Brown	Gray

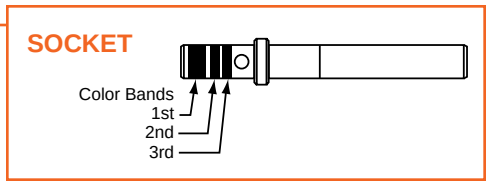

Sockets feature 4 tine construction with supporting spring bands.

STANDARD CRIMP CONTACT RATING

Contact Size	Test Current Standard	Crimp Well Data			
		Well Diameter		Min. Well Depth	
		Inches	Millimeters	Inches	Millimeters
20	7.5	.049	1.25	.157	3.99
16	13.0	.067	1.70	.250	6.35
12	23.0	.100	2.54	.250	6.35

STANDARD SEALING PLUGS

Contact Size	Sealing Plug MS Number	Sealing Plug Pyle Number	Color
20	MS27488-20	BA-4020-59P	Red
16	MS27488-16	BA-4016-59P	Blue
12	MS27488-12	BA-4012-59P	Yellow

TOOLS

Contact Size	Crimp Tool		Adjustable Turret		Checking Gauge for M22520/1-01 Crimping Tool		Insertion/Removal Tool		
	MS Number	Pyle Number	MS Number	Pyle Number	MS Number	Pyle Number	MS Number	Pyle Number	Amphenol Number*
20	M22520/1-01	TP-201354	M22520/1-02	TP-201355	M22520/3	TP-201356	M81969/14-11	TP-201343-20-BA	10-538988-201
16							M81969/14-03	TP-201343-16-BA	10-538988-016
12							M81969/14-04	TP-201343-12-BA	10-538988-012

* Amphenol part number for insertion/removal tool supersedes Pyle number

SHIELDED CONCENTRIC TWINAX CONTACTS

Contact Size	Cable Accommodation	Concentric Twinax Pin
#8 Twinax	M17/176-00002	BA-46T08-LD
#8 Twinax	PAN 6421 or JN1060ZB002	BA-46TA08-LD

CONCENTRIC TWINAX PIN

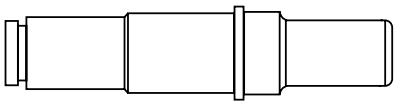

Non-MS part; no color bands.

Contact Size	Cable Accommodation	Concentric Twinax Socket
#8 Twinax	M17/176-00002	BA-47T08-LD
#8 Twinax	PAN 6421 or JN1060ZB002	BA-47TA08-LD

CONCENTRIC TWINAX SOCKET

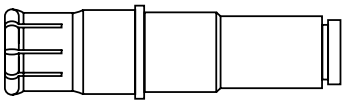

Non-MS part; no color bands.

Concentric Twinax contacts are designed for protection from magnetic and electrostatic interference including nuclear electromagnetic pulse. Consult Amphenol for other size twinax and coax contacts available for use in MIL-DTL-83723, Series III Pyle connectors.

THERMOCOUPLE - PIN PART NUMBERS / COLOR BANDS

Contact Size	Material	Thermocouple Pin Pyle Part Number	Thermocouple Pin Color Bands		
			!st Band	2nd Band	3rd Band
20	Chromel	BT-4020-10P	Brown	Orange	Green
20	Alumel	BT-4020-10R	Brown	Orange	Yellow
16	Chromel	BA-4016-10P	Green	Brown	Violet
16	Alumel	BA-4016-10R	Green	Brown	Blue

THERMOCOUPLE - SOCKET PART NUMBERS / COLOR BANDS

Contact Size	Material	Thermocouple Socket Pyle Part Number	Thermocouple Socket MS Part Number	Thermocouple Socket Color Bands		
				1st Band	2nd Band	3rd Band
20	Chromel	BT-4120-10P	–	Brown	Yellow	Brown
20	Alumel	BT-4120-10R	–	Brown	Yellow	Black
16	Chromel	BT-4116-10P	M39029/10-522	Green	Red	Red
16	Alumel	BT-4116-10R	M39029/10-521	Green	Red	Brown

STANDARD & HIGH TEMPERATURE CRIMP CONTACTS WIRE SEALING DIAMETERS / STRIPPING LENGTHS

Contact Size	Wire Size (AWG)	Finished Wire Outside				Stripping Lengths			
		Minimum		Maximum		Minimum		Maximum	
		Inches	Millimeters	Inches	Millimeters	Inches	Millimeters	Inches	Millimeters
20	24, 22, 20	.033	.84	.083	2.11	.140	3.56	.202	5.13
16	20, 18, 16	.047	1.19	.106	2.69	.218	5.54	.280	7.11
12	14, 12	.075	1.91	.157	3.99	.218	5.54	.280	7.11

CONTACTS THAT MEET EUROPEAN SPECIFICATIONS
STANDARD CRIMP - PIN
PART NUMBERS / COLOR BANDS

Contact Size	Pin Pyle Part Number	Pin EN3155 Part Number	Pin Color Bands		
			1st Band	2nd Band	Dot
20	BA-4020-36LD-Y165	EN3155-002MM2020	Red	Red	–
20/18*	BA-402018-36LD-Y165	EN3155-002M2018	Red	Violet	–
16	BA-4016-36LD-Y165	EN3155-002M1616	Blue	Blue	–
12	BA-4012-36LD-Y165	EN3155-002M1212	Yellow	Yellow	–

STANDARD PIN EUROPEAN SPEC

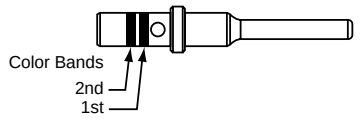

First band color is for contact size
2nd band color is for AWG wire size

CONTACTS THAT MEET EUROPEAN SPECIFICATIONS
STANDARD CRIMP - SOCKET
PART NUMBERS / COLOR BANDS

Contact Size	Socket Pyle Part Number	Socket EN3155 Part Number	Socket Color Bands		
			1st Band	2nd Band	Dot
20	BA-4120-36LD-Y165	EN3155-003F2020	Red	Red	–
20/18*	BA-412018-36LD-Y165	EN3155-003F2018	Red	Violet	–
16	BA-4116-36LD-Y165	EN3155-003F1616	Blue	Blue	–
12	BA-4112-36LD-Y165	EN3155-003F1212	Yellow	Yellow	–

STANDARD SOCKET EUROPEAN SPEC

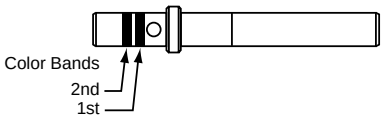

First band color is for contact size
2nd band color is for AWG wire size

CONTACTS THAT MEET EUROPEAN SPECIFICATIONS
HIGH TEMPERATURE - PIN
PART NUMBERS / COLOR BANDS

Contact Size	Pin Pyle Part Number	Pin ESC30 Part Number	Pin EN3155 Part Number	Pin Color Bands		
				1st Band	2nd Band	Dot
20	BA-4020-50LD	ESC30-P20BC	EN3155-004M2020	Red	Red	White
20/18*	BA-402018-50LD	–	EN3155-004M2018	Red	Violet	White
16	BA-4016-50LD	ESC30-P16BC	EN3155-004M1616	Blue	Blue	White
12	BA-4012-50LD	ESC30-P12BC	EN3155-004M1212	Yellow	Yellow	White

HIGH TEMPERATURE PIN EUROPEAN SPEC

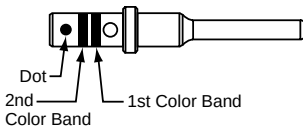

First band color is for contact size
2nd band color is for AWG wire size
Dot identifies High Temperature or Thermocouple contacts

CONTACTS THAT MEET EUROPEAN SPECIFICATIONS
HIGH TEMPERATURE - SOCKET
PART NUMBERS / COLOR BANDS

Contact Size	Socket Pyle Part Number	Socket ESC30 Part Number	Socket EN3155 Part Number	Socket Color Bands		
				1st Band	2nd Band	Dot
20	BA-4120-50LD	ESC30-S20BC	EN3155-005M2020	Red	Red	White
20/18*	BA-412018-50LD	–	EN3155-005M2018	Red	Violet	White
16	BA-4116-50LD	ESC30-S16BC	EN3155-005M1616	Blue	Blue	White
12	BA-4112-50LD	ESC30-S12BC	EN3155-005M1212	Yellow	Yellow	White

* #20 contacts with #18 crimpwell

HIGH TEMPERATURE SOCKET EUROPEAN SPEC

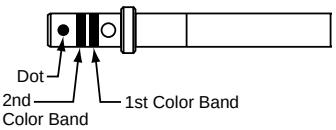

First band color is for contact size
2nd band color is for AWG wire size
Dot identifies High Temperature or Thermocouple contacts

CONTACTS THAT MEET EUROPEAN SPECIFICATIONS
THERMOCOUPLE - PIN
PART NUMBERS / COLOR BANDS

Contact Size	Material	Pin Pyle Part Number	Pin ESC30 Part Number	Pin Color Bands		
				1st Band	2nd Band	Dot
20	Chromel	BT-4020-10P-Y165	ESC30-P20NC	Red	Red	Yellow
20	Alumel	BT-4020-10R-Y165	ESC30-P20NA	Red	Red	Black
20/18*	Chromel	BT-402018-10P-Y165	–	Red	Violet	Yellow
20/18*	Alumel	BT-402018-10R-Y165	–	Red	Violet	Black
16	Chromel	BT-4016-10P-Y165	ESC30-P16NC	Blue	Blue	Yellow
16	Alumel	BT-4016-10R-Y165	ESC30-P16NA	Blue	Blue	Black

CONTACTS THAT MEET EUROPEAN SPECIFICATIONS
THERMOCOUPLE - SOCKET
PART NUMBERS / COLOR BANDS

Contact Size	Material	Socket Pyle Part Number	Socket ESC30 Part Number	Socket Color Bands		
				1st Band	2nd Band	Dot
20	Chromel	BT-4120-10P-Y165	ESC30-S20NC	Red	Red	Yellow
20	Alumel	BT-4120-10R-Y165	ESC30-S20NA	Red	Red	Black
20/18*	Chromel	BT-412018-10P-Y165	–	Red	Violet	Yellow
20/18*	Alumel	BT-412018-10R-Y165	–	Red	Violet	Black
16	Chromel	BT-4116-10P-Y165	ESC30-S16NC	Blue	Blue	Yellow
16	Alumel	BT-4116-10R-Y165	ESC30-S16NA	Blue	Blue	Black

HIGH TEMPERATURE SEALING PLUGS

Contact Size	Sealing Plug Pyle Number	Color
20	BT-4020-60P	Red
16	BT-4016-60P	Blue
12	BT-4012-60P	Yellow

Amphenol
MIL-DTL-5015, Matrix®

New Featured

TABLE OF CONTENTS

MIL-DTL-5015, Matrix®

- Table of Contents 170
- Design Characteristics, Customer Options 171
- Insert Availability and Identification 172, 173
- Insert Arrangement Drawings . . . . . 174 - 182
- Class Descriptions, Performance Specifications 183
- Insert Alternate Positioning 184
- How to Order, Military and Commercial 185

Shell Styles:

- Wall mounting receptacle threaded MS3450 (9440) 186
- Cable connecting plug threaded MS3451 (9441) 187
- Box mounting receptacle threaded MS3452 (9442) 188
- Jam nut receptacle threaded MS3454 (9444) 189
- Straight plug threaded MS3456 (9446) 190
- Straight plug, self-locking threaded MS3459 (9816) 191
- Quick disconnect plug push-pull coupling (9817/9818) 192
- Matrix® 5015 with RADSOK® contacts, for high power 193
- Contact information, sealing plugs, tools 194
- Protection caps, dust caps 195-197
- Additional MIL-DTL-5015 connectors offered by Amphenol . . . 198

MIL-DTL-5015, Matrix® Typical Markets:

- Military Vehicles
- Heavy Equipment
- Military Aircraft
- Power Generation

Amphenol Aerospace

MS3450
wall mounting receptacle

MS3451
cable connecting receptacle

MS3452
box mounting receptacle

MS3454
jam nut receptacle

MS3456
plug with threaded coupling

MS3459
plug with self-locking coupling nut

Proprietary quick disconnect plug with/without lanyard

Amphenol broadens their MS/Standard family of connectors with the MIL-DTL-5015 Crimp Rear Release Series.

This series provides an alternative to the older MIL-C-5015 solder type. It bridges the gap between an old connector standard and the environmental and high performance needs of current technologies.

DESIGN CHARACTERISTICS

- Medium to heavy weight cylindrical
- MS345( ) series intermateable with existing MIL-DTL-5015 solder or crimp versions on existing equipment
- Captive coupling nut mechanism, utilizes retaining rings in combination with "L" washers to prevent inadvertent disassembly
- Multiple interlock systems ensure permanent insert retention
- Positive control of dielectric separation with guaranteed ease of contact insertion
- Positive contact retention provided by a closely toleranced damage-proof metal retention clip
- Completely sealed against environmental extremes with -
  - Individual contact seals (conical risers on pin interface)
  - Interfacial seals between contacts
  - Peripheral gasket shell-to-shell seals
  - Redundant rear wire seals and insert-to-shell seals

CUSTOMER OPTIONS

- Seven mounting styles, in shell sizes 8 to 48*
- Threaded coupling or self-locking plug (MS3459) with an internal ratcheting mechanism to prevent unmating due to vibration and shock, eliminating the need for safety wiring
- Proprietary quick disconnect plug, with or without lanyard available
- Classes include aluminum or stainless steel shells, or firewall capability
- MS and Proprietary versions available
- Some styles are supplied to McDonnell Douglas Specification BAN 7025, DC60 Series
- Accommodation of contact sizes 0 to 16
- Over 100 insert arrangement patterns available, accommodating from a minimum of 1 to a maximum of 85 circuits
- Alternate positioning available
- Thermocouple pin and socket contacts are available**

NOTE: MIL-C-5015 is superceded to MIL-DTL-5015 for all Amphenol/Matrix rear release crimp type contacts.

* Consult Amphenol, Sidney, NY for availability of shell sizes 44 and 48.

** Consult Amphenol, Sidney, NY for information on thermocouple contacts.

MIL-DTL-5015 Crimp Rear Release
Insert Availability and Identification

Insert Arrangement	Service Rating	Total Contacts	Contact Size				
			0	4	8	12	16
8S-1	A	1					1
10S-2	A	1					1
10SL-3	A	3					3
10SL-4	A	2					2
12S-1	A	2					2
12S-2	A	2					2
12S-3	A	2					2
12S-4	D	1					1
12-5	D	1				1	
14S-1**	A	3					3
14S-2	Inst.	4					4
14-3	A	1			1		
14S-5	Inst.	5					5
14S-6	Inst.	6					6
14S-7	A	3					3
14S-9**	A	2					2
14S-10	Inst.	4					4
14S-11	Inst.	4					4
14S-12	A	3					3
14S-13	A	3					3
16S-1	A	7					7
16-2*	E	1				1	
16S-3*	B	1					1
16S-4*	D	2					2
16-7*	A	3			1		2
16S-8	A	5					5
16-9	A	4				2	2
16-10	A	3				3	
16-11	A	2				2	
16-12	A	1		1			
16-13	A	2				2	
18-1	A/Inst.	10					10
18-4	D	4					4
18-5 •	D	3				2	1
18-6*	D	1		1			
18-7*	B	1			1		
18-8	A	8				1	7
18-9	Inst.	7				2	5
18-10**	A	4				4	
18-11	A	5				5	
18-12	A	6					6
18-13	A	4			1	3	
18-14*	A	2		1			1
18-15	A	4				4	
18-16*	C	1				1	
18-17	Inst.	7				2	5
18-18	Inst.	7				2	5
18-19**	A	10					10
18-22**	D	3					3

Insert Arrangement	Service Rating	Total Contacts	Contact Size				
			0	4	8	12	16
18-23	A/Inst.	10					10
18-24	A/Inst.	10					10
18-27•	D	3				2	1
18-28•	D	3				2	1
20-2	D	1	1				
20-4	D	4				4	
20-7	D/A	8					8
20-8	Inst.	6			2		4
20-9*	D/A	8				1	7
20-14	A	5			2	3	
20-15	A	7				7	
20-16	A	9				2	7
20-17	A	6				5	1
20-18	A	9				3	6
20-19	A	3			3		
20-21	A	9				1	8
20-22	A	6			3		3
20-24	A	4			2		2
20-27	A	14					14
20-29	A	17					17
20-32	D/A	8					8
20-33	A	11					11
22-2	D	3			3		
22-4**	A	4			2	2	
22-5	D	6				2	4
22-6*	D	3			2		1
22-7*	E	1	1				
22-9*	E	3				3	
22-10*	E	4					4
22-11*	B	2					2
22-12*	D	5			2		3
22-14	A	19					19
22-15*	E/A	6				5	1
22-17*	D/A	9				1	8
22-18*	D/A	8					8
22-19	A	14					14
22-21	A	3	1				2
22-22	A	4			4		
22-23	D/A	8				8	
22-27*	D/A	9			1		8
22-30	A	19					19
22-32	D	6				2	4
22-36*	D/A	8				8	
24-1**	D	2	1			1	
24-2	D	7				7	
24-4*	D	4	1				3
24-5**	A	16					16
24-6*	D/A	8				8	

* Consult Amphenol, Sidney, NY for availability
** Inactive for new design
• Socket Only

Insert Arrangement	Service Rating	Total Contacts	Contact Size				
			0	4	8	12	16
24-7	A	16				2	14
24-10	A	7			7		
24-11	A	9			3	6	
24-12	A	5		2		3	
24-15	A	16					16
24-16*	D/A	7			1	3	3
24-20	D	11				2	9
24-21*	D	10			1		9
24-22	D	4			4		
24-24	A	16					16
24-27*	E	7					7
24-28	Inst.	24					24
24-80*	Inst.	23					23
28-1	D/A	9			3	6	
28-2	D	14				2	12
28-3*	E	3			3		
28-4*	E/D	9				2	7
28-5*	D	5		2		1	2
28-8*	E/D/A	12				2	10
28-9	D	12				6	6
28-10	D/A	7		2	2	3	
28-11	A	22				4	18
28-12	A	26					26
28-13	A	26					26
28-15	A	35					35
28-16*	A	20					20
28-17	B/D/A	15					15
28-18*	C/D/A/Inst.	12					12
28-19*	B/D/A	10				4	6
28-20	A	14				10	4
28-21	A	37					37
28-22	D	6		3			3
32-1	E/D	5	2			3	
32-2*	E	5		3			2
32-3*	D	9	1	2		2	4
32-6	A	23		2	3	2	16
32-7	Inst./A	35				7	28
32-9	D	14		2			12
32-13	D	23				5	18
32-15	D	8	2			6	
32-16	A	23		2	3	2	16
32-17	D	4		4			
32-19	E/D	5	2			3	
32-20	A	23		2	3	2	16

Insert Arrangement	Service Rating	Total Contacts	Contact Size				
			0	4	8	12	16
32-22*	A	54					54
32-63	D	5		5			
32-73	A	46					46
36-3	D	6	3			3	
36-5	A	4	4				
36-6	A	6	2	4			
36-7	A	47				7	40
36-8	A	47				1	46
36-9	A	31		1	2	14	14
36-10	A	48					48
36-11	A	48					48
36-12	A	48					48
36-15	D/A	35					35
36-16	A	47				7	40
36-17	A	47				7	40
36-18	A	31		1	2	14	14
36-21	A	31		1	2	14	14
36-52	A	52					52
36-66*	A	56				4	52
40-1	D	30				6	24
40-2*	D	23					23
40-3*	D	23		1		4	18
40-4*	D	23		2	3	2	16
40-5*	A	15	3	2	4	6	
40-6*	D	26	1			1	24
40-7*	A/D	22	2			2	18
40-9	A	47			1	22	24
40-10*	A	29		4	9		16
40-11*	D	25	1	1	1	4	18
40-56	A	85					85
40-62*	A	60					60

* Consult Amphenol, Sidney, NY for availability

** Inactive for new design

Front Face of Pin Insert or Rear Face of Socket Insert Illustrated

100° Rotation of 12S-3

250° Rotation of 12S-3

Insert Arrangement	8S-1	10S-2	10SL-3	10SL-4	12S-1	12S-2	12S-3
Service Rating	A	A	A***	A	A	A	A
Number of Contacts	1	1	3	2	2	2	2
Contact Size	16	16	16	16	16	16	16

Insert Arrangement	12S-4	12-5	14S-1**	14S-2	14-3	14S-5	14S-6
Service Rating	D	D	A	Inst.	A	Inst.	Inst.
Number of Contacts	1	1	3	4	1	5	6
Contact Size	16	12	16	16	8	16	16

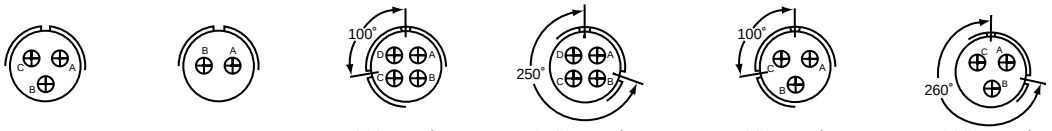

100° Rotation of 14S-2

250° Rotation of 14S-2

100° Rotation of 14S-1

260° Rotation of 14S-1

Insert Arrangement	14S-7	14S-9**	14S-10	14S-11	14S-12	14S-13
Service Rating	A	A	Inst.	Inst.	A	A
Number of Contacts	3	2	4	4	3	3
Contact Size	16	16	16	16	16	16

Insert Arrangement	16S-1	16-2*	16S-3*	16S-4*	16-7*	16S-8
Service Rating	A	E	B	D	A	A
Number of Contacts	7	1	1	2	1 2	5
Contact Size	16	12	16	16	8 16	16

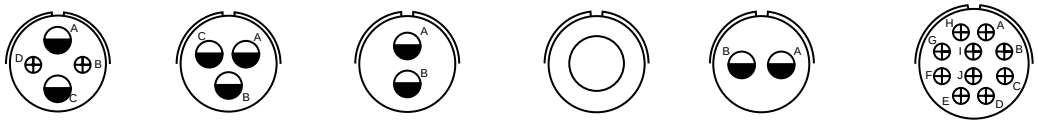

Insert Arrangement	16-9	16-10	16-11	16-12	16-13	18-1
Service Rating	A	A	A	A	A	B, C, F, G = A; Bal. = Inst.
Number of Contacts	2 2	3	2	1	2†	10
Contact Size	12 16	12	12	4	12	16

* Consult Amphenol, Sidney, NY for availability.
** Inactive for new design
*** Service rating Inst. Class K
† one Iron contact and one Constantan contact

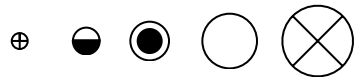

CONTACT LEGEND 16 12 8 4 0

Front Face of Pin Insert or Rear Face of Socket Insert Illustrated

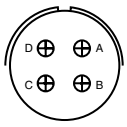

Insert Arrangement	18-4	18-5 •		18-6*	18-7*	18-8*		18-9	
Service Rating	D	D		D	B	A		Inst.	
Number of Contacts	4	2	1	1	1	1	7	2	5
Contact Size	16	12	16	4	8	12	16	12	16

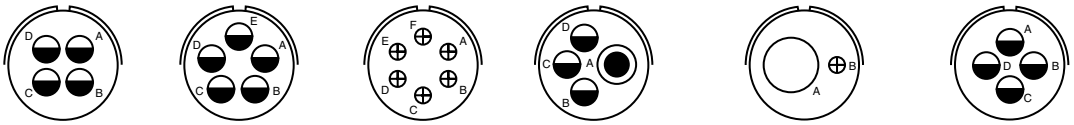

Insert Arrangement	18-10**	18-11	18-12	18-13		18-14*		18-15
Service Rating	A	A	A	A		A		A
Number of Contacts	4	5	6	1	3	1	1	4††
Contact Size	12	12	16	8	12	4	16	12

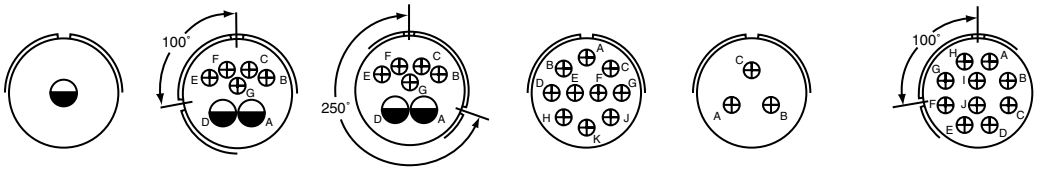

100° Rotation of 18-9

250° Rotation of 18-9

100° Rotation of 18-1

Insert Arrangement	18-16*	18-17		18-18		18-19**	18-22**	18-23
Service Rating	C	Inst.		Inst.		A	D	B, C, F, G = A; Bal. = Inst.
Number of Contacts	1	2	5	2	5	10	3	10
Contact Size	12	12	16	12	16	16	16	16

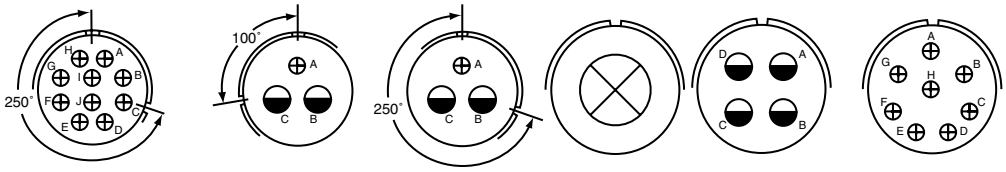

250° Rotation of 18-1

100° Rotation of 18-5

250° Rotation of 18-5

Insert Arrangement	18-24	18-27 •		18-28 •		20-2	20-4	20-7
Service Rating	B, C, F, G = A; Bal. = Inst.	D		D		D	D	A, B, G, H = D; C, D, E, F = A
Number of Contacts	10	2	1	2	1	1	4	8
Contact Size	16	12	16	12	16	0	12	16

* Consult Amphenol, Sidney, NY for availability.
** Inactive for new design\
• Socket only
† one Iron contact and one Constantan contact
†† A, C = Iron; B, D = Constantan

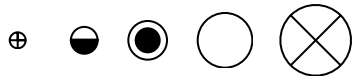

Front Face of Pin Insert or Rear Face of Socket Insert Illustrated

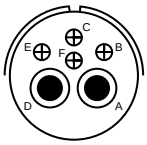

Insert Arrangement	20-8*		20-9*		20-14		20-15	20-16		20-17	
Service Rating	Inst.		H = D; Bal. = A		A		A	A		A	
Number of Contacts	2	4	1	7	2	3	7	2	7	5	1
Contact Size	8	16	12	16	8	12	12	12	16	12	16

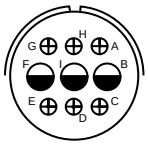

Insert Arrangement	20-18		20-19	20-21		20-22		20-24		20-27
Service Rating	A		A	A		A		A		A
Number of Contacts	3	6	3	1	8	3	3	2	2	14
Contact Size	12	16	8	12	16	8	16	8	16	16

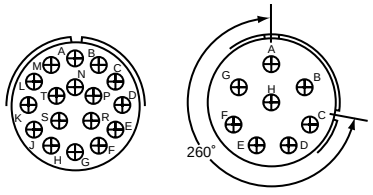

260° Rotation of 20-7

Insert Arrangement	20-29	20-32	20-33	22-2	22-4**		22-5	
Service Rating	A	A, B, G, H = D; Bal. = A	A	D	A		D	
Number of Contacts	17	8	11	3	2	2	2	4
Contact Size	16	16	16	8	8	12	12	16

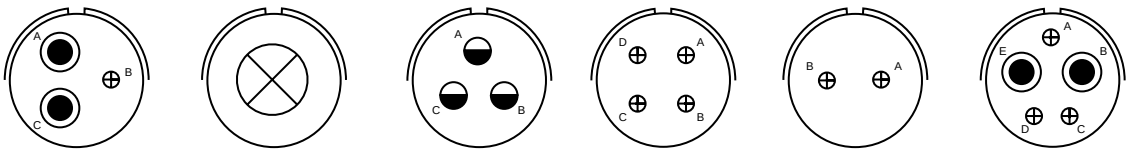

Insert Arrangement	22-6**		22-7*	22-9*	22-10*	22-11*		22-12*	
Service Rating	D		E	E	E	B		D	
Number of Contacts	2	1	1	3	4	2		2	3
Contact Size	8	16	0	12	16	16		8	16

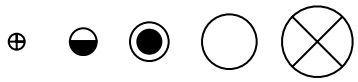

CONTACT LEGEND 16 12 8 4 0

* Consult Amphenol, Sidney, NY for availability.

Front Face of Pin Insert or Rear Face of Socket Insert Illustrated

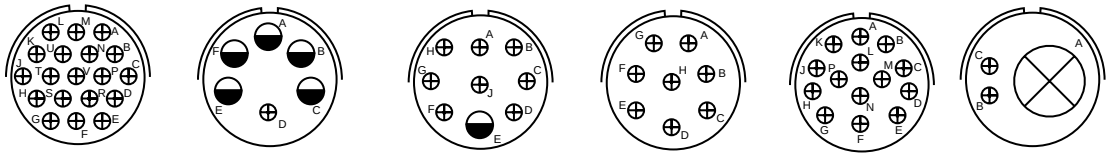

Insert Arrangement	22-14	22-15*		22-17*		22-18*	22-19	22-21	
Service Rating	A	D = 3; Bal. = A		A = D; Bal. = A		C, D, E = A: Bal. = D	A	A	
Number of Contacts	19	5	1	1	8	8	14	1	2
Contact Size	16	12	16	12	16	16	16	0	16

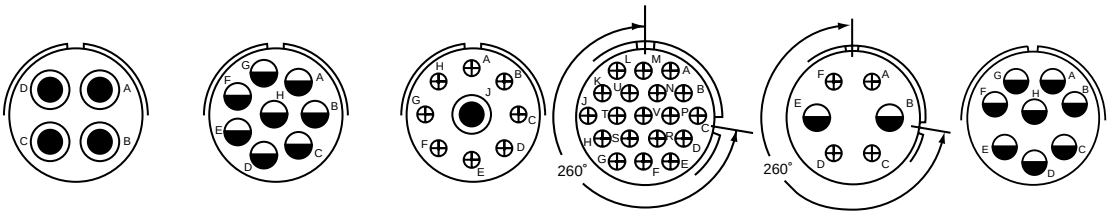

260° Rotation of 22-14

260° Rotation of 22-5

Insert Arrangement	22-22	22-23	22-27*		22-30	22-32		22-36*
Service Rating	A	H = D; Bal. = A	J = D; Bal. = A		A	D		H = D; Bal. = A
Number of Contacts	4	8	1	8	19	2	4	8
Contact Size	8	12	8	16	16	12	16	12

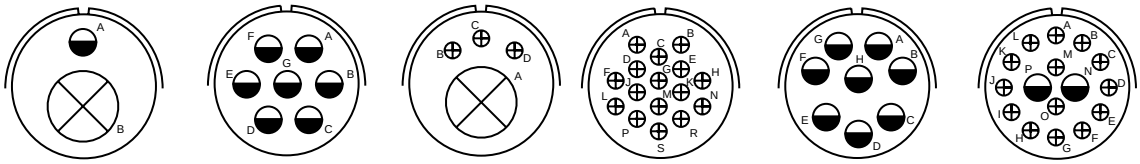

Insert Arrangement	24-1**		24-2	24-4*		24-5**	24-6*	24-7	
Service Rating	D		D	D		A	A, G, H = D; Bal. = A	A	
Number of Contacts	1	1	7	1	3	16	8	2	14
Contact Size	0	12	12	0	16	16	12	12	16

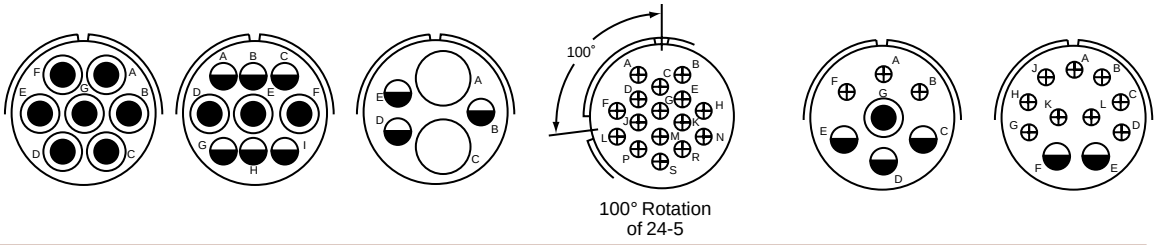

100° Rotation of 24-5

Insert Arrangement	24-10	24-11		24-12		24-15		24-16*			24-20
Service Rating	A	A		A		A		A, B, F, G = D; C, D, E = A			D
Number of Contacts	7	3	6	2	3	16	1	3	3	2	9
Contact Size	8	8	12	4	12	16	8	12	16	12	16

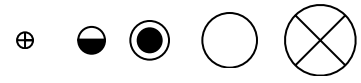

CONTACT LEGEND 16 12 8 4 0

* Consult Amphenol, Sidney, NY for availability.
** Inactive for new design

Front Face of Pin Insert or Rear Face of Socket Insert Illustrated

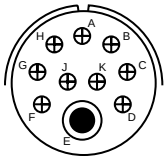

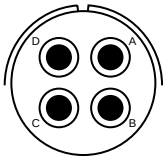

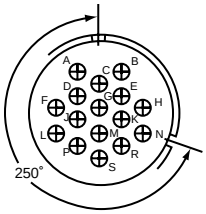

250° Rotation of 24-5

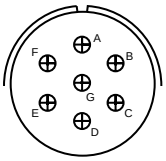

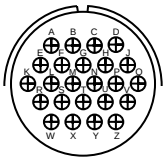

Insert Arrangement	24-21*		24-22	24-24	24-27*	24-28
Service Rating	D		D	A	E	Inst.
Number of Contacts	1	9	4	16	7	24
Contact Size	8	16	8	16	16	16

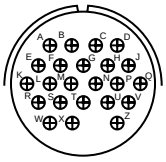

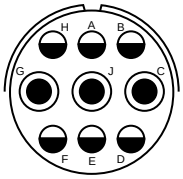

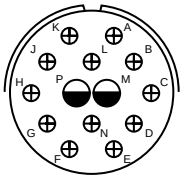

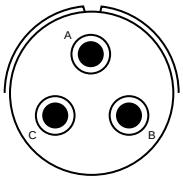

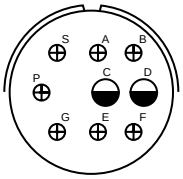

Insert Arrangement	24-80*	28-1		28-2		28-3*	28-4*	
Service Rating	Inst.	A, J, E = D; Bal. = A		D		E	G, P, S = E; Bal. = D	
Number of Contacts	23	3	6	2	12	3	2	7
Contact Size	16	8	12	12	16	8	12	16

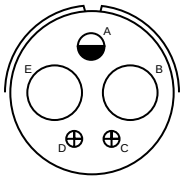

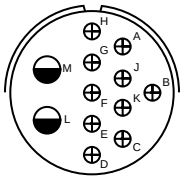

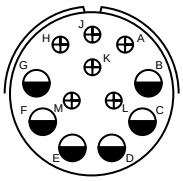

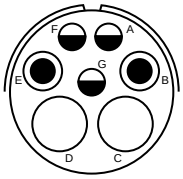

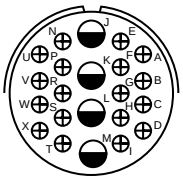

Insert Arrangement	28-5*			28-8*		28-9		28-10			28-11	
Service Rating	D			L, M = E; B = D; Bal. = A		D		G = D, Bal. = A			A	
Number of Contacts	2	1	2	2	10	6	6	2	2	3	4	18
Contact Size	4	12	16	12	16	12	16	4	8	12	12	16

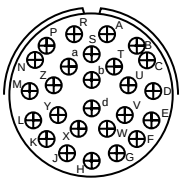

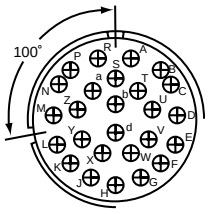

100° Rotation of 28-12

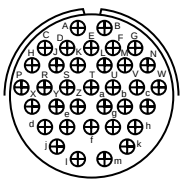

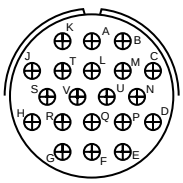

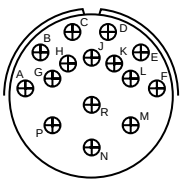

Insert Arrangement	28-12	28-13	28-15	28-16**	28-17
Service Rating	A	A	A	A	R = B; M, N, P = D; Bal. = A
Number of Contacts	26	26	35	20	15
Contact Size	16	16	16	16	16

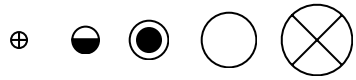

CONTACT LEGEND 16 12 8 4 0

* Consult Amphenol, Sidney, NY for availability.

Front Face of Pin Insert or Rear Face of Socket Insert Illustrated

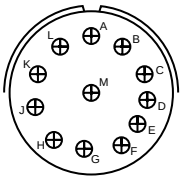
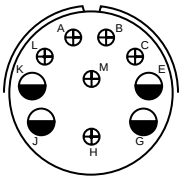
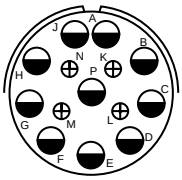
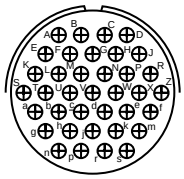

Insert Arrangement	28-18*		28-19*		28-20		28-21
Service Rating	M = C; G, H, J, K, L = D; A, B = A; Bal. = Inst.		H, M = B; A, B = D; Bal. = A		A		A
Number of Contacts	12		4	6	10	4	37
Contact Size	16		12	16	12	16	16

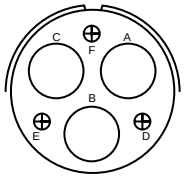
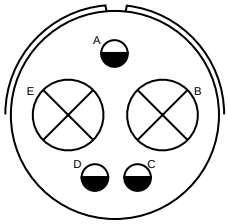
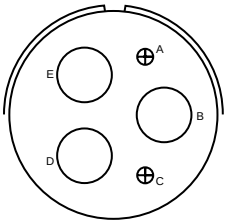
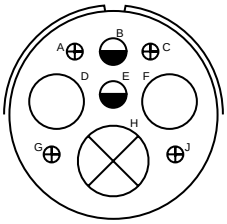
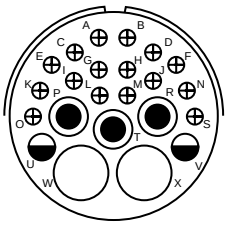

Insert Arrangement	28-22		32-1		32-2*		32-3*				32-6			
Service Rating	D		A = E; B, C, D, E = D		E		D				A			
Number of Contacts	3	3	2	3	3	2	1	2	2	4	2	3	2	16
Contact Size	4	16	0	12	4	16	0	4	12	16	4	8	12	16

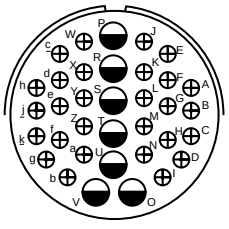
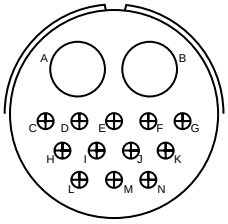
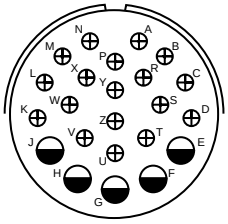
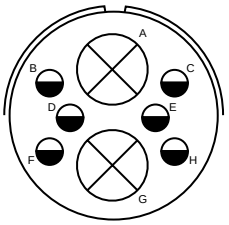

Insert Arrangement	32-7		32-9		32-13				32-15	
Service Rating	A, B, h, j = Inst.; Bal. = A		D		D				D	
Number of Contacts	7	28	2	12	5	18	2	4	2	6
Contact Size	12	16	4	16	12	16	12	16	0	12

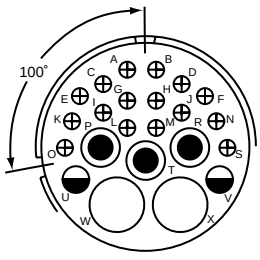

100° Rotation of 32-6

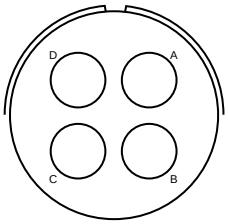

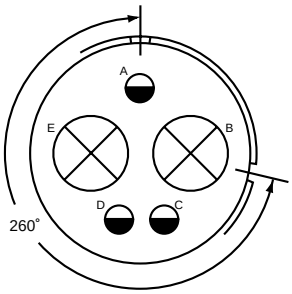

260° Rotation of 32-1

Insert Arrangement	32-16				32-17		32-19	
Service Rating	A				D		A = E, Bal. = D	
Number of Contacts	2	3	2	16	4		2	3
Contact Size	4	8	12	16	4		0	12

* Consult Amphenol, Sidney, NY for availability.
** Inactive for new design

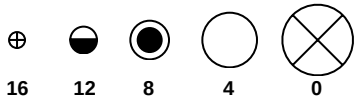

Front Face of Pin Insert or Rear Face of Socket Insert Illustrated

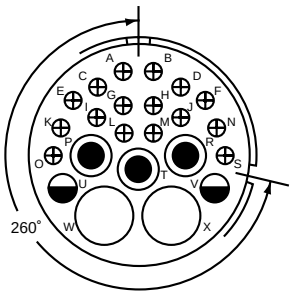

260° Rotation of 32-6

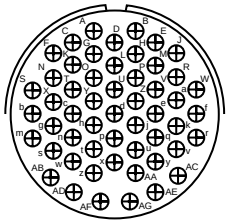

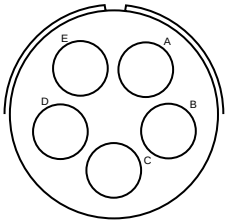

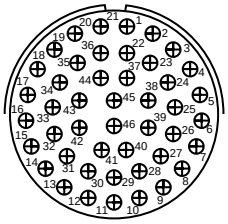

Insert Arrangement	32-20				32-22*	32-63	32-73
Service Rating	A				A	D	A
Number of Contacts	2	3	2	16	54	5	46
Contact Size	4	8	12	16	16	4	16

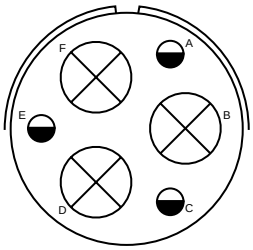

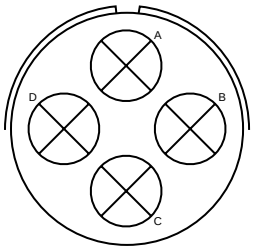

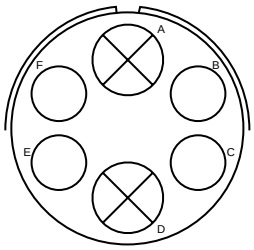

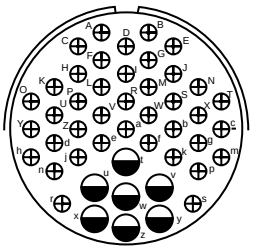

Insert Arrangement	36-3		36-5	36-6		36-7	
Service Rating	D		A	A		A	
Number of Contacts	3	3	4	2	4	7	40
Contact Size	0	12	0	0	4	12	16

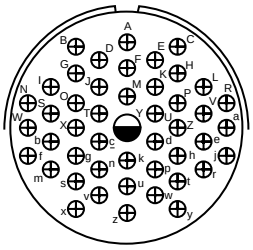

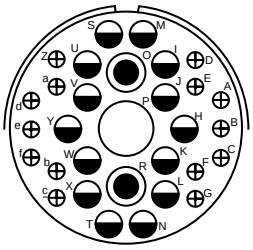

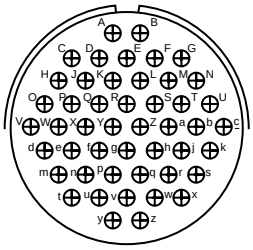

100° Rotation of 36-10

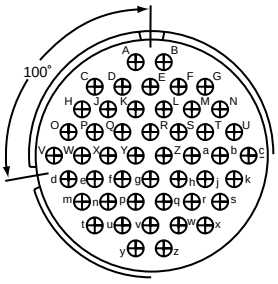

Insert Arrangement	36-8		36-9				36-10	36-11
Service Rating	A		A				A	A
Number of Contacts	1	46	1	2	14	14	48	48
Contact Size	12	16	4	8	12	16	16	16

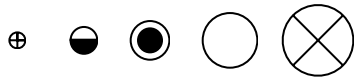

* Consult Amphenol, Sidney, NY for availability.

Front Face of Pin Insert or Rear Face of Socket Insert Illustrated

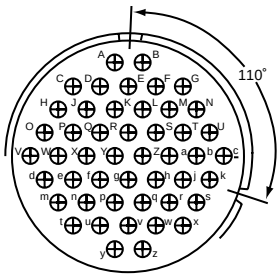

110° Rotation of 36-10

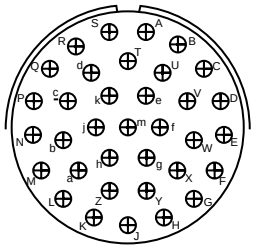

100° Rotation of 36-7

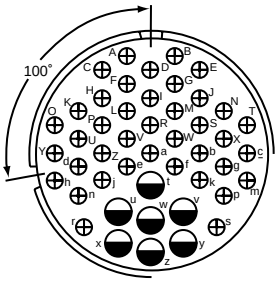

110° Rotation of 36-7

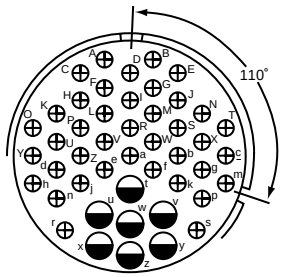

Insert Arrangement	36-12	36-15	36-16		36-17	
Service Rating	A	M = D, Bal. = A	A		A	
Number of Contacts	48	35	7	40	7	40
Contact Size	16	16	12	16	12	16

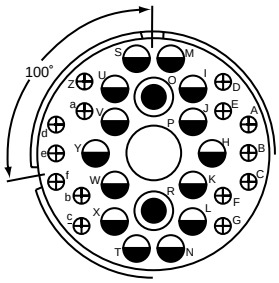

100° Rotation of 36-9

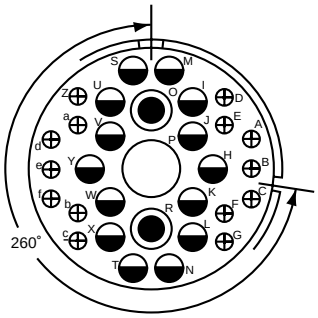

260° Rotation of 36-9

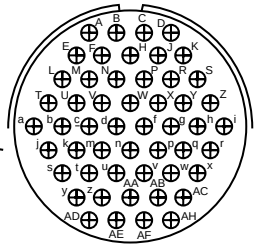

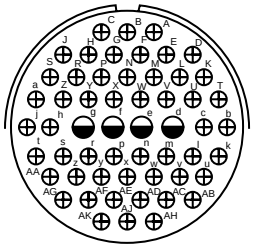

Insert Arrangement	36-18				36-21				36-52	36-66*	
Service Rating	A				A				A	A	
Number of Contacts	1	2	14	14	1	2	14	14	52	4	52
Contact Size	4	8	12	16	4	8	12	16	16	12	16

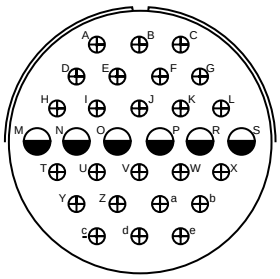

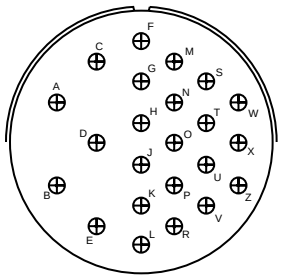

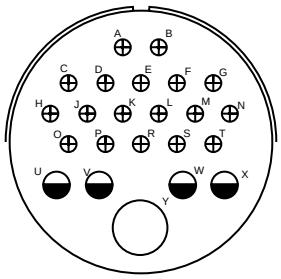

Insert Arrangement	40-1		40-2*		40-3*		
Service Rating	D		D		D		
Number of Contacts	6	24	23		1	4	18
Contact Size	12	16	16		4	12	16

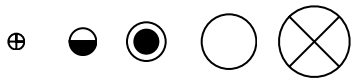

CONTACT LEGEND	16	12	8	4	0

* Consult Amphenol, Sidney, NY for availability.

Front Face of Pin Insert or Rear Face of Socket Insert Illustrated

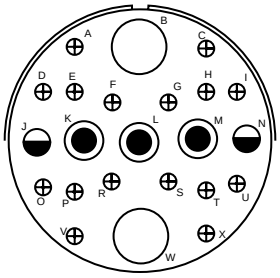

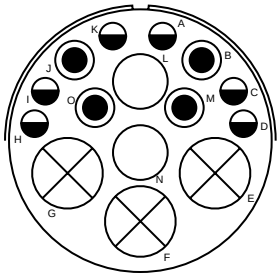

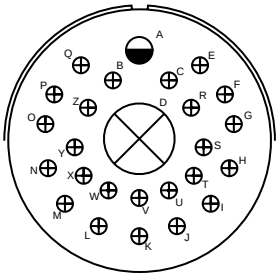

Insert Arrangement	40-4*				40-5*				40-6*		
Service Rating	D				A				D		
Number of Contacts	2	3	2	16	3	2	4	6	1	1	24
Contact Size	4	8	12	16	0	4	8	12	0	12	16

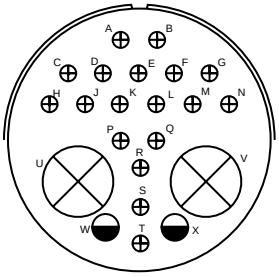

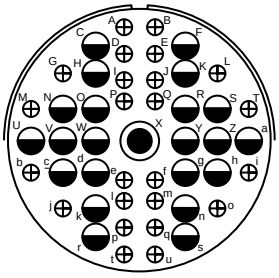

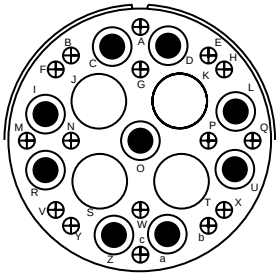

Insert Arrangement	40-7*			40-9			40-10*		
Service Rating	P, Q, U, V, W, X = A; Bal. = D			A			A		
Number of Contacts	2	2	18	1	22	24	4	9	16
Contact Size	0	12	16	8	12	16	4	8	16

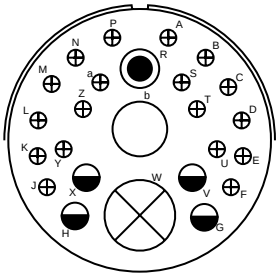

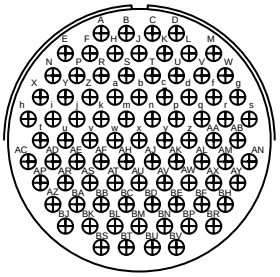

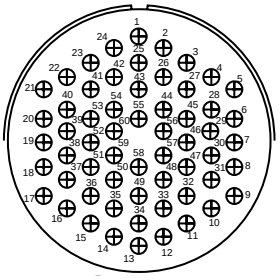

Insert Arrangement	40-11*					40-56	40-62*
Service Rating	D					A	A
Number of Contacts	1	1	1	4	18	85	60
Contact Size	0	4	8	12	16	16	16

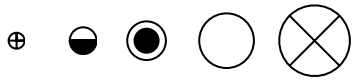

CONTACT LEGEND 16 12 8 4 0

* Consult Amphenol, Sidney, NY for availability.

Amphenol Aerospace

CLASS DESCRIPTIONS

Military MIL-DTL-5015	
Class L*	Aluminum shell, electroless nickel finish, fluid resistant insert
Class W	Aluminum shell, cadmium olive drab finish, fluid resistant insert
Class LS	Stainless steel shell, passivated, fluid resistant insert
Class KT**	Firewall, steel shell, cadmium olive drab finish, non-flammable hard dielectric and fluid resistant insert
Class KS	Firewall, stainless steel shell, passivated, non-flammable hard dielectric and fluid resistant insert

Amphenol/Matrix	
Class A	Aluminum shell, black anodize finish, fluid resistant insert
Class F	Aluminum shell, electroless nickel finish, fluid resistant insert
Class W	Aluminum shell, cadmium/olive drab finish, fluid resistant insert
Class FS	Stainless steel shell, passivated, fluid resistant insert
Class KT	Firewall, steel shell, cadmium olive drab finish, non-flammable hard dielectric and fluid resistant insert
Class KS	Firewall, stainless steel shell, passivated, non-flammable hard dielectric and fluid resistant insert

* Class L inactivates older Class U (aluminum, electroless nickel)

** Class KT (ferrous alloy, cadmium/olive drab) inactivates older Class K (ferrous alloy, electroless nickel)

PERFORMANCE SPECIFICATIONS

VOLTAGE RATING

Altitude	Inst.	A	D	E	B	C
Sea Level	1000	2000	2800	3500	4500	7000
50,000 ft.	400	600	675	750	825	975
70,000 ft.	260	360	400	440	480	560
110,000 ft.	200	200	200	200	200	200

SHOCK

Wired, mated connectors are subjected to one shock in each of three mutually perpendicular axes with pulse of an approximate half sine wave of 50g magnitude for a duration of 11 milliseconds. All contacts wired in series circuit with 100 ±10 Milliamperes of current flow.

OPERATING TEMPERATURE RANGE

Classes L, LS and KS have temperature range of
–55°C (–75°F) to 200°C (392°F)
Classes W and KT have temperature range of
–55°C (–75°F) to 175°C (347°F)

ENVIRONMENTAL SEAL

Wired, mated connectors with the specified accessory attached will meet the altitude immersion test specified in MIL-DTL-5015.

DURABILITY

Minimum of 100 mating cycles.

MIL-DTL-5015 Crimp Rear Release
Insert Alternate Positioning

To avoid cross-plugging problems in applications requiring the use of more than one connector of the same size and arrangement, alternate rotations are available as indicated in the accompanying charts.

As shown in the diagram below, the front face of the pin insert is rotated within the shell in a clockwise direction from the normal shell key. The socket insert would be rotated counter-clockwise the same number of degrees in respect to the normal shell key.

The charts give the W, X, Y, Z positions for the alternate rotations available for the insert arrangements of the rear release MIL-DTL-5015 series of connectors. If an insert arrangement number is not given, then there is no available alternate rotation for that pattern.

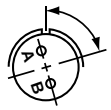

Position W

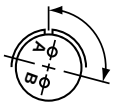

Position X

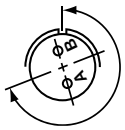

Position Y

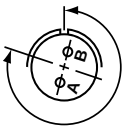

Position Z

View looking into front face of pin insert or rear of socket insert.

The following insert arrangements have the same alternate insert rotations for W, X, Y and Z, which are:

Degrees			
W	X	Y	Z
80	110	250	280

16-7	20-22	24-4	28-4	28-21	40-3
18-5	22-6	24-5	28-8	32-1	40-4
18-9	22-12	24-6	28-9	32-3	40-5
18-13	22-14	24-7	28-10	32-6	40-6
18-14	22-15	24-12	28-11	32-9	40-7
20-7	22-17	24-16	28-15	32-13	40-11
20-8	22-18	24-20	28-16	32-22	
20-9	22-19	24-21	28-17	36-7	
20-14	22-21	24-28	28-19	36-8	
20-16	24-1	28-1	28-20	40-2	

Insert Arrangement	Degrees			
	W	X	Y	Z
12S-3	70	145	215	290
14S-2	–	120	240	–
14S-5	–	110	–	–
14S-7	90	180	270	–
14S-9	70	145	215	290
16S-1	80	–	–	280
16S-4	35	110	250	325
16S-8	–	170	265	–
16-9	35	110	250	325
16-10	90	180	270	–
16-11	35	110	250	325
16-13	35	110	250	325
18-1	70	145	215	290
18-4	35	110	250	325
18-8	70	–	–	290
18-10	–	120	240	–
18-11	–	170	265	–
18-12	80	–	–	280
18-15	–	120	240	–
18-19	–	120	240	–
18-22	70	145	215	290
20-4	45	110	250	–
20-15	80	–	–	280

Insert Arrangement	Degrees			
	W	X	Y	Z
20-17	90	180	270	–
20-18	35	110	250	325
20-19	90	180	270	–
20-21	35	110	250	325
20-24	35	110	250	325
20-27	35	110	250	325
20-29	80	–	–	280
22-2	70	145	215	290
22-4	35	110	250	325
22-5	35	110	250	325
22-9	70	145	215	290
22-10	35	110	250	325
22-11	35	110	250	325
22-22	–	110	250	–
22-23	35	–	250	–
22-27	80	–	250	280
22-36	90	–	270	–
24-2	80	–	–	280
24-10	80	–	–	280
24-11	35	110	250	325
24-22	45	110	250	–
24-27	80	–	–	280
24-80	35	145	240	300

Insert Arrangement	Degrees			
	W	X	Y	Z
28-2	35	110	250	325
28-3	70	145	215	290
28-5	35	110	250	325
28-12	90	180	270	–
28-18	70	145	215	290
28-22	70	145	215	290
32-2	70	145	215	290
32-7	80	125	235	280
32-15	35	110	250	280
32-17	45	110	250	–
32-73	36	–	–	–
36-3	70	145	215	290
36-5	–	120	240	–
36-6	35	110	250	325
36-9	80	125	235	280
36-10	80	125	235	280
36-15	60	125	245	305
36-52	72	144	216	288
36-66	110	250	260	280
40-1	65	130	235	300
40-9	65	125	255	310
40-10	65	125	255	310
40-56	72	144	216	288
40-62	30	130	220	290

MIL-DTL-5015 Crimp Rear Release
How to Order

	1.	2.	3.	4.	5.	6.	7.
MIL-DTL-5015 with rear release crimp contacts	Connector Type	Shell Style	Service class	Shell Size–Insert Arrangement	Contact Types	Alternate Positions	Modification Number
MILITARY	MS	3456	L	16S–8	P	W	NA
COMMERCIAL	944	6	F	16S–8	P	W	(XXX)

Step 1. Military Connector Type

MS	Designates Military Standard

Step 2. Select a Shell Style
THREADED COUPLING CONNECTORS

3450	Wall mounting receptacle
3451	Cable connecting receptacle
3452	Box mounting receptacle
3454	Jam nut receptacle
3456	Straight plug
3459	Straight plug with self-locking coupling nut

Step 3. Select a Service Class

L	Aluminum shell, electroless nickel finish, fluid resistant insert
W	Aluminum shell, cadmium olive drab finish, fluid resistant insert
LS	Stainless steel shell, passivated, fluid resistant insert
Firewall Styles only available for 3450, 3456, 3459 per mil spec:	
KT	Firewall, steel shell, cadmium/olive drab finish, non-flammable hard dielectric and fluid resistant insert
KS	Firewall, stainless steel shell, passivated, non-flammable hard dielectric and fluid resistant insert

Note: Class L inactivates older Class U.
Class K is inactive and has been replaced by Class KT for all applications.

Step 4. Select a Shell Size & Insert Arrangement see pages 172 &173

Shell Size & Insert Arrangements are on pages 172 &173.
First number represents Shell Size,
second number is the Insert Arrangement.

Step 5. Select a Contact Type

	Designates
P	Pin
S	Socket
A	Less pins
B	Less sockets

Step 6. Alternate Positions

"W", "X", "Y", "Z" designate that insert is rotated in its shell from normal position. No letter required for normal (no rotation) position. See page 184 for description of alternate positions.

Step 1. Select a Commercial Connector Type

944	Designates Amphenol/Matrix Commercial Series
981	Designates self locking/Quick disconnect (+)(-) lanyard

Step 2. Select a Shell Style
THREADED COUPLING CONNECTORS

0	Wall mounting receptacle
1	Cable connecting receptacle
2	Box mounting receptacle
4	Jam nut receptacle
6	Straight plug
Self Locking/Quick disconnect (981) styles:	
6	Straight plug with self-locking coupling nut
7	Quick disconnect plug with lanyard
8	Quick disconnect plug without lanyard

Step 3. Select a Service Class

A	Aluminum shell, black anodized finish, fluid resistant insert
F	Aluminum shell, electroless nickel finish, fluid resistant insert
W	Aluminum shell, cadmium olive drab finish, fluid resistant insert
FS	Stainless steel shell, passivated, fluid resistant insert
KT	Firewall, steel shell, cadmium/olive drab finish, non-flammable hard dielectric and fluid resistant insert
KS	Firewall, stainless steel shell, passivated, non-flammable hard dielectric and fluid resistant insert

Step 4. Select a Shell Size & Insert Arrangement see pages 172 & 173

Shell Size & Insert Arrangements are on pages 172 & 173.
First number represents Shell Size,
second number is the Insert Arrangement.

Step 5. Select a Contact Type

	Designates
P	Pin
S	Socket

Step 6. Alternate Positions

"W", "X", "Y", "Z" designate that insert is rotated in its shell from normal position. No letter required for normal (no rotation) position. See page184 for description of alternate positions.

Step 7. Modification Number

Consult Amphenol, Sidney, NY for information.
For strain reliefs use the following modification codes:

(189) E-nut M85049/31 configuration
(190) Straight strain relief M85049/52 configuration
(191) 90° strain relief M85049/51 configuration

PART # **Receptacle Shell, Flange Wall Mount, Threaded Coupling.**
To complete, see how to order page 185

MIL-DTL-5015	Connector Type	Shell Style	Service Class	Shell Size–Insert Arrangement	Contact Type	Alternate Rotation	Modification Number
Military	**MS**	**3450**	*L*	*16S–8*	*P*	*W*	**NA**
Commercial	**944**	**0**	*F*	*16S–8*	*P*	*W*	*xxx*

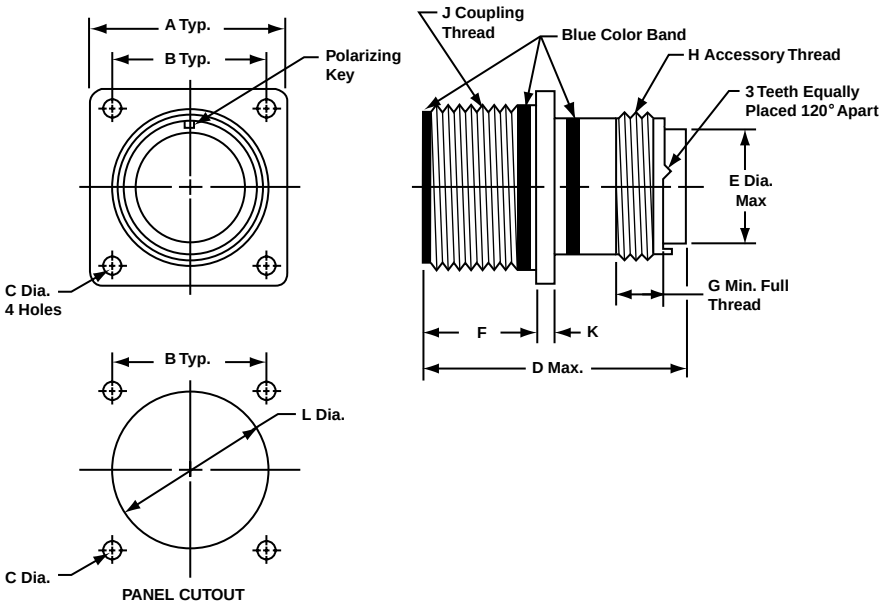

Shell Size*	A ±.031	B	C Dia. +.010 –.005 Class A, F, R, W	C Dia. +.010 –.005 Class K	D Max. Size 16 & 12 Contacts	D Max. Size 8, 4, 0 Contacts	E Dia. Max.	F	G Min.	H Thread Class 2A	J Thread Class 2A	K	L Dia. ±.010
8S	.875	.594	.120	.150	2.031	–	.305	.593/.562	.290	.5000-20 UNEF	.5000-28 UNEF	.083	.562
10S	1.000	.719	.120	.150	2.031	–	.405	.593/.562	.290	.6250-24 UNEF	.6250-24 UNEF	.083	.688
10SL	1.000	.719	.120	.150	2.031	–	.405	.593/.562	.290	.6250-24 UNEF	.6250-24 UNEF	.083	.688
12	1.094	.812	.120	.150	2.125	–	.549	.781/.750	.290	.7500-20 UNEF	.7500-20 UNEF	.083	.812
12S	1.094	.812	.120	.150	2.031	–	.549	.593/.562	.290	.7500-20 UNEF	.7500-20 UNEF	.083	.812
14	1.188	.906	.120	.150	2.125	–	.665	.781/.750	.290	.8750-20 UNEF	.8750-20 UNEF	.083	.938
14S	1.188	.906	.120	.150	2.031	–	.665	.593/.562	.290	.8750-20 UNEF	.8750-20 UNEF	.083	.938
16	1.281	.969	.120	.150	2.125	2.500	.790	.781/.750	.290	1.0000-20 UNEF	1.0000-20 UNEF	.083	1.062
16S	1.281	.969	.120	.150	2.031	–	.790	.593/.562	.290	1.0000-20 UNEF	1.0000-20 UNEF	.083	1.062
18	1.375	1.062	.120	.177	2.125	2.500	.869	.781/.750	.290	1.0625-18 UNEF	1.1250-18 UNEF	.125	1.188
20	1.500	1.156	.120	.177	2.125	2.500	.994	.781/.750	.290	1.1875-18 UNEF	1.2500-18 UNEF	.125	1.312
22	1.625	1.250	.120	.177	2.125	2.500	1.119	.781/.750	.290	1.3125-18 UNEF	1.3750-18 UNEF	.125	1.438
24	1.750	1.375	.147	.177	2.125	2.500	1.244	.843/.812	.290	1.4375-18 UNEF	1.5000-18 UNEF	.125	1.562
28	2.000	1.562	.147	.177	2.125	2.500	1.465	.843/.812	.467	1.7500-18 UNS	1.7500-18 UNS	.125	1.812
32	2.250	1.750	.173	.209	2.125	2.500	1.715	.906/.875	.467	2.0000-18 UNS	2.0000-18 UNS	.125	2.062
36	2.500	1.938	.173	.209	2.125	2.500	1.930	.906/.875	.467	2.2500-16 UN	2.2500-16 UN	.125	2.312
40	2.750	2.188	.173	.209	2.125	2.500	2.145	.906/.875	.467	2.5000-16 UN	2.5000-16 UN	.125	2.562

* Consult Amphenol, Sidney, NY for availability of shell sizes 44 and 48.

PART # **Receptacle Shell, Cable Connecting, Threaded Coupling.**
To complete, see how to order page 185

MIL-DTL-5015	Connector Type	Connector Style	Service Class	Shell Size–Insert Arrangement	Contact Type	Insert Rotation	Modification Number
Military	**MS**	**3451**	*L*	*16S–8*	*P*	*W*	**NA**
Commercial	**944**	**1**	*F*	*16S–8*	*P*	*W*	*xxx*

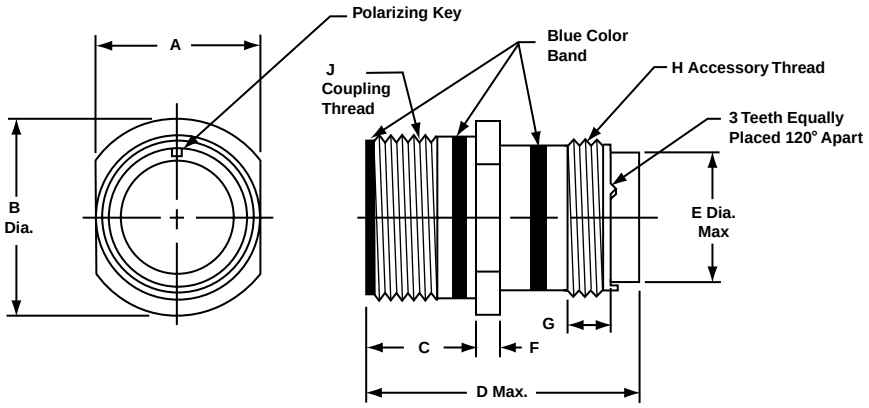

Shell Size	A	B Dia. ±.031	C	D Max. Size 16 & 12 Contacts	D Max. Size 8, 4, 0 Contacts	E Dia. Max.	F ±.015	G Min.	H Thread Class 2A	J Thread Class 2A
8S	.504/.496	.729	.577/.562	2.031	–	.305	.083	.290	.5000-20 UNEF	.5000-28 UNEF
10S	.629/.621	.854	.577/.562	2.031	–	.405	.083	.290	.6250-24 UNEF	.6250-24 UNEF
10SL	.629/.621	.854	.577/.562	2.031	–	.405	.083	.290	.6250-24 UNEF	.6250-24 UNEF
12	.754/.746	.974	.765/.750	2.125	–	.549	.083	.290	.7500-20 UNEF	.7500-20 UNEF
12S	.754/.746	.974	.577/.562	2.031	–	.549	.083	.290	.7500-20 UNEF	.7500-20 UNEF
14	.879/.871	1.099	.765/.750	2.125	–	.665	.083	.290	.8750-20 UNEF	.8750-20 UNEF
14S	.879/.871	1.099	.577/.562	2.031	–	.665	.083	.290	.8750-20 UNEF	.8750-20 UNEF
16	1.005/.996	1.224	.765/.750	2.125	2.500	.790	.083	.290	1.0000-20 UNEF	1.0000-20 UNEF
16S	1.005/.996	1.224	.577/.562	2.031	–	.790	.083	.290	1.0000-20 UNEF	1.0000-20 UNEF
18	1.131/1.121	1.349	.765/.750	2.125	2.500	.869	.125	.290	1.0625-18 UNEF	1.1250-18 UNEF
20	1.256/1.246	1.474	.765/.750	2.125	2.500	.994	.125	.290	1.1875-18 UNEF	1.2500-18 UNEF
22	1.381/1.371	1.599	.765/.750	2.125	2.500	1.119	.125	.290	1.3125-18 UNEF	1.3750-18 UNEF
24	1.506/1.496	1.715	.827/.812	2.125	2.500	1.244	.125	.290	1.4375-18 UNEF	1.5000-18 UNEF
28	1.756/1.746	1.974	.827/.812	2.125	2.500	1.465	.125	.467	1.7500-18 UNS	1.7500-18 UNS
32	2.007/1.996	2.224	.890/.870	2.125	2.500	1.715	.125	.467	2.0000-18 UNS	2.0000-18 UNS
36	2.257/2.246	2.474	.890/.870	2.125	2.500	1.930	.125	.467	2.2500-16 UN	2.2500-16 UN
40	2.511/2.456	2.724	.890/.870	2.125	2.500	2.145	.125	.467	2.5000-16 UN	2.5000-16 UN

* Consult Amphenol, Sidney, NY for availability of shell sizes 44 and 48.

PART # **Receptacle Shell, Flange Mount, Threaded Coupling.**
To complete, see how to order page 185

MIL-DTL-5015	Connector Type	Shell Style	Service Class	Shell Size–Insert Arrangement	Contact Type	Alternate Rotation	Modification Number
Military	**MS**	**3452**	*L*	*16S–8*	*P*	*W*	**NA**
Commercial	**944**	**2**	*F*	*16S–8*	*P*	*W*	*xxx*

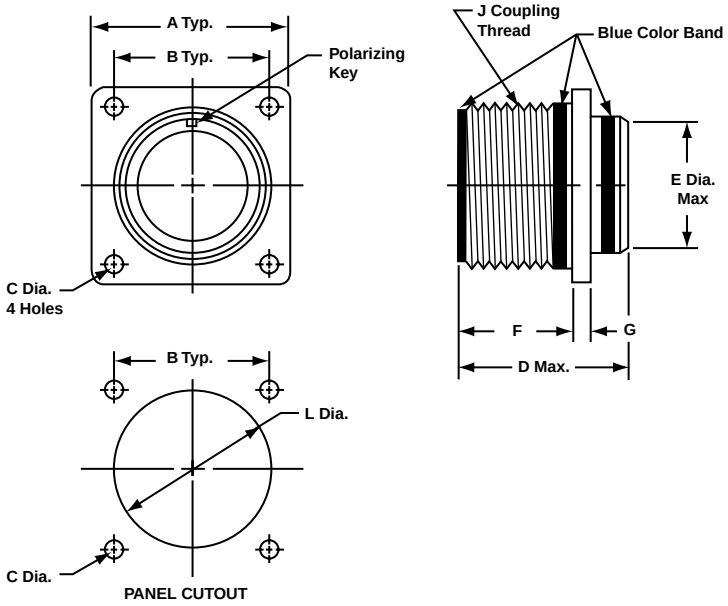

Shell Size*	A ±.031	B	C Dia.	D Max. Size 16 & 12 Contacts	D Max. Size 8, 4, 0 Contacts	E Dia. ±.016	F	G ±.015	J Thread Class 2A	L Dia. ±.010
8S	.875	.594	.130/.115	1.662	–	.500	.578/.562	.083	.5000-28 UNEF	.562
10S	1.000	.719	.130/.115	1.662	–	.625	.578/.562	.083	.6250-24 UNEF	.688
10SL	1.000	.719	.130/.115	1.662	–	.625	.578/.562	.083	.6250-24 UNEF	.688
12	1.094	.812	.130/.115	1.662	–	.750	.765/.750	.083	.7500-20 UNEF	.812
12S	1.094	.812	.130/.115	1.662	–	.750	.578/.562	.083	.7500-20 UNEF	.812
14	1.188	.906	.130/.115	1.662	–	.875	.765/.750	.083	.8750-20 UNEF	.938
14S	1.188	.906	.130/.115	1.662	–	.875	.577/.562	.083	.8750-20 UNEF	.938
16	1.281	.969	.130/.115	1.662	1.937	1.000	.765/.750	.083	1.0000-20 UNEF	1.062
16S	1.281	.969	.130/.115	1.662	–	1.000	.577/.562	.083	1.0000-20 UNEF	1.062
18	1.375	1.062	.130/.115	1.662	1.937	1.062	.765/.750	.125	1.1250-18 UNEF	1.188
20	1.500	1.156	.130/.115	1.662	1.937	1.187	.765/.750	.125	1.2500-18 UNEF	1.312
22	1.625	1.250	.130/.115	1.662	1.937	1.312	.765/.750	.125	1.3750-18 UNEF	1.438
24	1.750	1.375	.157/.142	1.662	1.937	1.437	.827/.812	.125	1.5000-18 UNEF	1.562
28	2.000	1.562	.157/.142	1.662	1.937	1.750	.827/.812	.125	1.7500-18 UNS	1.812
32	2.250	1.750	.183/.168	1.662	1.937	2.000	.988/.875	.125	2.0000-18 UNS	2.062
36	2.500	1.938	.183/.168	1.662	1.937	2.250	.988/.875	.125	2.2500-16 UN	2.312
40	2.750	2.188	.183/.168	1.662	1.937	2.500	.988/.875	.125	2.5000-16 UN	2.562

* Consult Amphenol, Sidney, NY for availability of shell sizes 44 and 48.

PART # **Receptacle Shell, Jam Nut Mount, Threaded Coupling**
To complete, see how to order page 185

MIL-DTL-5015	Connector Type	Shell Style	Service Class	Shell Size–Insert Arrangement	Contact Type	Alternate Rotation	Modification Number
Military	**MS**	**3454**	*L*	*16S–8*	*P*	*W*	**NA**
Commercial	**944**	**4**	*F*	*16S–8*	*P*	*W*	*xxx*

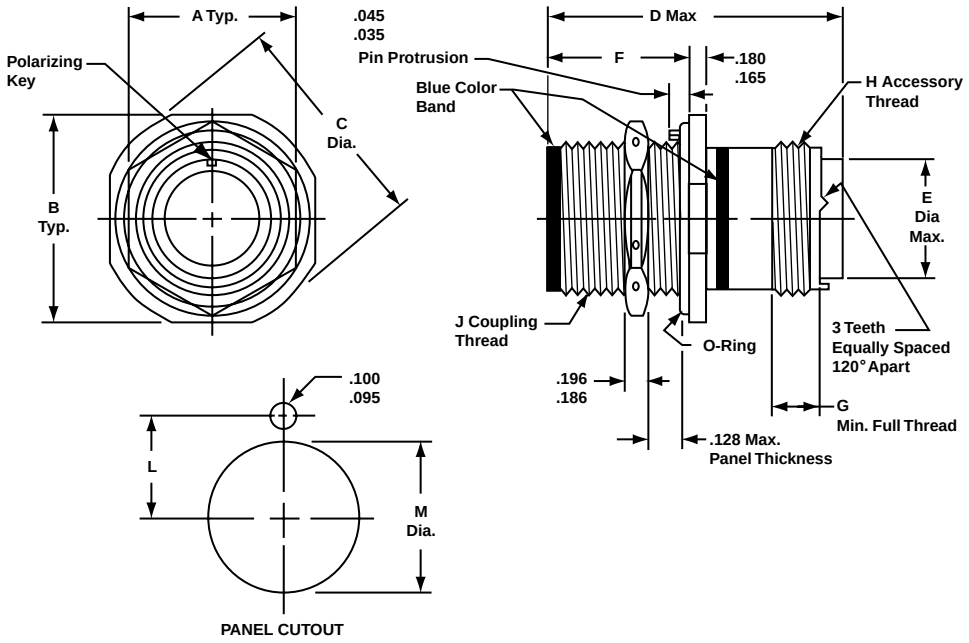

Shell Size*	A ±.010	B ±.005	C Dia. ±.005	D Max. Size 16 & 12 Contacts	D Max. Size 8, 4, 0 Contacts	E Dia. Max.	F ±.005	G Min.	H Thread Class 2A	J Thread Class 2A	Panel Cutout Dimensions L ±.005	Panel Cutout Dimensions M Dia. +.015 –.000
8S	.687	1.187	1.272	2.031	–	.305	.720	.290	.5000-20 UNEF	.5000-28 UNEF	.323	.505
10S	.812	1.312	1.397	2.031	–	.405	.720	.290	.6250-24 UNEF	.6250-24 UNEF	.385	.630
10SL	.812	1.312	1.397	2.031	–	.405	.720	.290	.6250-24 UNEF	.6250-24 UNEF	.385	.630
12	.937	1.437	1.522	2.125	–	.549	.970	.290	.7500-20 UNEF	.7500-20 UNEF	.448	.755
12S	.937	1.437	1.522	2.031	–	.549	.720	.290	.7500-20 UNEF	.7500-20 UNEF	.448	.755
14	1.125	1.562	1.647	2.125	–	.665	.970	.290	.8750-20 UNEF	.8750-20 UNEF	.510	.880
14S	1.125	1.562	1.647	2.031	–	.665	.720	.290	.8750-20 UNEF	.8750-20 UNEF	.510	.880
16	1.250	1.687	1.772	2.125	2.500	.790	.970	.290	1.0000-20 UNEF	1.0000-20 UNEF	.573	1.005
16S	1.250	1.687	1.772	2.031	–	.790	.720	.290	1.0000-20 UNEF	1.0000-20 UNEF	.573	1.005
18	1.375	1.812	1.897	2.125	2.500	.869	.970	.290	1.0625-18 UNEF	1.1250-18 UNEF	.635	1.130
20	1.500	1.937	2.022	2.125	2.500	.994	.970	.290	1.1875-18 UNEF	1.2500-18 UNEF	.698	1.255
22	1.625	2.156	2.241	2.125	2.500	1.119	.970	.290	1.3125-18 UNEF	1.3750-18 UNEF	.760	1.380
24	1.750	2.281	2.366	2.125	2.500	1.244	.970	.290	1.4375-18 UNEF	1.5000-18 UNEF	.823	1.505
28	2.000	2.531	2.616	2.125	2.500	1.465	.970	.467	1.7500-18 UNS	1.7500-18 UNS	.948	1.755
32	2.375	2.781	2.866	2.125	2.500	1.715	.970	.467	2.0000-18 UNS	2.0000-18 UNS	1.073	2.005
36	2.625	3.031	3.116	2.125	2.500	1.930	.970	.467	2.2500-16 UN	2.2500-16 UN	1.198	2.255
40	2.875	3.281	3.366	2.125	2.500	2.145	.970	.467	2.5000-16 UN	2.5000-16 UN	1.323	2.505

* Consult Amphenol, Sidney, NY for availability of shell sizes 44 and 48.

PART # **Plug Shell, Threaded Coupling.**
To complete, see how to order page 185

MIL-DTL-5015	Connector Type	Shell Style	Service Class	Shell Size–Insert Arrangement	Contact Type	Alternate Rotation	Modification Number
Military	**MS**	**3456**	*L*	*16S–8*	*P*	*W*	**NA**
Commercial	**944**	**6**	*F*	*16S–8*	*P*	*W*	*xxx*

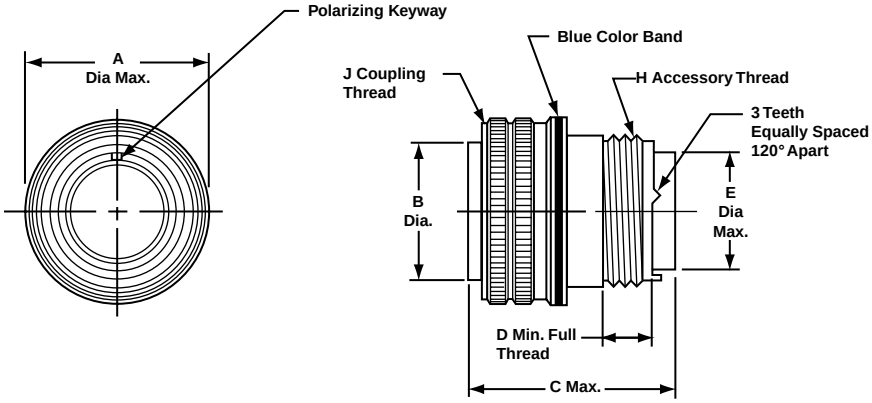

Shell Size*	A Dia. Max.	B Dia. ±.005	C Max. Size 16 & 12 Contacts	C Max. Size 8, 4, 0 Contacts	D Min.	E Dia. Max.	H Thread Class 2A	J Thread Class 2B
8S	.844	.360	2.031	–	.290	.305	.5000-20 UNF	.5000-28 UNEF
10S	.969	.435	2.031	–	.290	.405	.6250-24 UNEF	.6250-24 UNEF
10SL	.969	.441**	2.031	–	.290	.405	.6250-24 UNEF	.6250-24 UNEF
12	1.062	.550	2.125	–	.290	.549	.7500-20 UNEF	.7500-20 UNEF
12S	1.062	.550	2.031	–	.290	.549	.7500-20 UNEF	.7500-20 UNEF
14	1.156	.670	2.125	–	.290	.665	.8750-20 UNEF	.8750-20 UNEF
14S	1.156	.670	2.031	–	.290	.665	.8750-20 UNEF	.8750-20 UNEF
16	1.250	.800	2.125	2.500	.290	.790	1.0000-20 UNEF	1.0000-20 UNEF
16S	1.250	.800	2.031	–	.290	.790	1.0000-20 UNEF	1.0000-20 UNEF
18	1.344	.925	2.125	2.500	.290	.869	1.0625-18 UNEF	1.1250-18 UNEF
20	1.469	1.045	2.125	2.500	.290	.994	1.1875-18 UNEF	1.2500-18 UNEF
22	1.594	1.170	2.125	2.500	.290	1.119	1.3125-18 UNEF	1.3750-18 UNEF
24	1.719	1.295	2.125	2.500	.290	1.244	1.4375-18 UNEF	1.5000-18 UNEF
28	1.969	1.515	2.125	2.500	.467	1.465	1.7500-18 UNS	1.7500-18 UNS
32	2.219	1.765	2.125	2.500	.467	1.715	2.0000-18 UNS	2.0000-18 UNS
36	2.469	1.975	2.125	2.500	.467	1.930	2.2500-16 UN	2.2500-16 UN
40	2.719	2.225	2.125	2.500	.467	2.145	2.5000-16 UN	2.5000-16 UN

* Consult Amphenol, Sidney, NY for availability of shell sizes 44 and 48.
** Tolerance on this dimension is +.000 –.006

PART # **Plug Shell, Self-Locking, Threaded Coupling**
To complete, see how to order page 185

MIL-DTL-5015	Connector Type	Shell Style	Service Class	Shell Size–Insert Arrangement	Contact Type	Alternate Rotation	Modification Number
Military	**MS**	**3459**	*L*	*16S–8*	*P*	*W*	**NA**
Commercial	**981**	**6**	*F*	*16S–8*	*P*	*W*	*xxx*

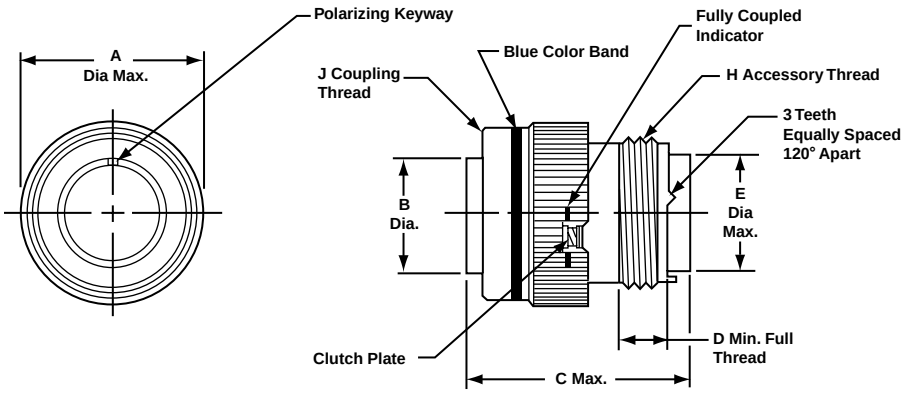

Shell Size*	A Dia. Max.	B Dia. ±.005	C Max. Size 16 & 12 Contacts	C Max. Size 8, 4, 0 Contacts	D Min.	E Dia. Max.	H Thread Class 2A	J Thread Class 2B
8S	.963	.360	1.510	–	.290	.305	.5000-20 UNEF	.5000-28 UNEF
10S	1.088	.435	1.510	–	.290	.405	.6250-24 UNEF	.6250-24 UNEF
10SL	1.088	.441**	1.510	–	.290	.405	.6250-24 UNEF	.6250-24 UNEF
12	1.213	.550	1.780	–	.290	.549	.7500-20 UNEF	.7500-20 UNEF
12S	1.213	.550	1.510	–	.290	.549	.7500-20 UNEF	.7500-20 UNEF
14	1.358	.670	1.780	–	.290	.665	.8750-20 UNEF	.8750-20 UNEF
14S	1.358	.670	1.510	–	.290	.665	.8750-20 UNEF	.8750-20 UNEF
16	1.463	.800	1.780	2.500	.290	.790	1.0000-20 UNEF	1.0000-20 UNEF
16S	1.463	.800	1.510	–	.290	.790	1.0000-20 UNEF	1.0000-20 UNEF
18	1.588	.925	1.850	2.500	.290	.869	1.0625-18 UNEF	1.1250-18 UNEF
20	1.713	1.045	1.850	2.500	.290	.994	1.1875-18 UNEF	1.2500-18 UNEF
22	1.788	1.170	1.850	2.500	.290	1.119	1.3125-18 UNEF	1.3750-18 UNEF
24	1.963	1.295	1.850	2.500	.290	1.244	1.4375-18 UNEF	1.5000-18 UNEF
28	2.213	1.515	1.850	2.500	.467	1.465	1.7500-18 UNS	1.7500-18 UNS
32	2.463	1.765	1.850	2.500	.467	1.715	2.0000-18 UNS	2.0000-18 UNS
36	2.713	1.975	1.850	2.500	.467	1.930	2.2500-16 UN	2.2500-16 UN
40	2.963	2.225	1.850	2.500	.467	2.145	2.5000-16 UN	2.5000-16 UN

* Consult Amphenol, Sidney, NY for availability of shell sizes 44 and 48.
** Tolerance on this dimension is +.000 –.006

PART # **Plug Shell, Quick Disconnect, Push-pull Coupling**
To complete, see how to order page 185

MIL-DTL-5015	Connector Type	Shell Style	Service Class	Shell Size–Insert Arrangement	Contact Type	Alternate Rotation	Modification Number
Commercial	**981**	**7**	*L*	*16S–8*	*P*	*W*	*xxx*
Commercial	**981**	**8**	*F*	*16S–8*	*P*	*W*	*xxx*

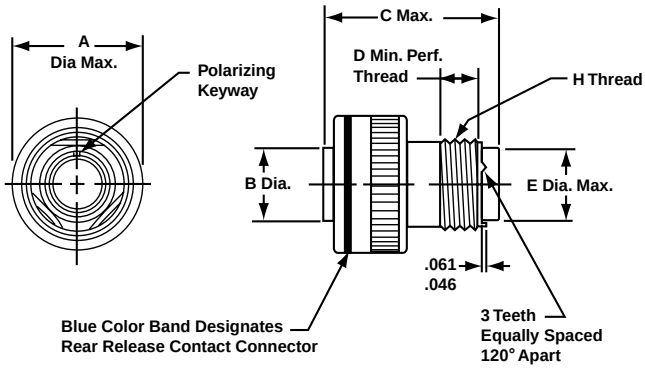

9818 Connector

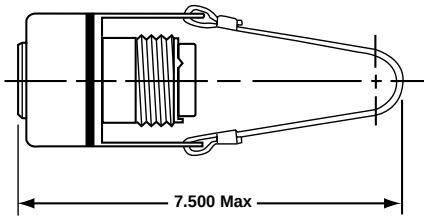

9817 Connector with Lanyard

Shell Size*	A Dia. Max.	B Dia.	C Max. Size 16 & 12 Contacts	C Max. Size 8, 4, 0 Contacts	D Min.	E Dia. Max.	H Thread Class 2A	Amphenol/ Matrix Part Number for Adapter Ring
8S	1.087	.360	2.031	–	.290	.305	.5000-20 UNF	2500-008-0X08
10S	1.224	.435	2.031	–	.290	.405	.6250-24 UNEF	2500-008-0X10
10SL	1.224	.441	2.031	–	.290	.405	.6250-24 UNEF	2500-008-0X10
12	1.355	.550	2.125	–	.290	.549	.7500-20 UNEF	2500-008-0X12
12S	1.355	.550	2.031	–	.290	.549	.7500-20 UNEF	2500-008-0X13
14	1.482	.670	2.125	–	.290	.665	.8750-20 UNEF	2500-008-0X14
14S	1.482	.670	2.031	–	.290	.665	.8750-20 UNEF	2500-008-0X15
16	1.609	.800	2.125	2.500	.290	.790	1.0000-20 UNEF	2500-008-0X16
16S	1.609	.800	2.031	–	.290	.790	1.0000-20 UNEF	2500-008-0X17
18	1.817	.925	2.125	2.500	.290	.869	1.0625-18 UNEF	2500-008-0X18
20	1.942	1.045	2.125	2.500	.290	.994	1.1875-18 UNEF	2500-008-0X20
22	2.075	1.170	2.125	2.500	.290	1.119	1.3125-18 UNEF	2500-008-0X22
24	2.203	1.295	2.125	2.500	.290	1.244	1.4375-18 UNEF	2500-008-0X24
28	2.516	1.515	2.125	2.500	.467	1.465	1.7500-18 UNS	2500-008-0X28
32	2.735	1.765	2.125	2.500	.467	1.715	2.0000-18 UNS	2500-008-0X32
36	3.015	1.975	2.125	2.500	.467	1.930	2.2500-16 UN	2500-008-0X36
40	3.306	2.225	2.125	2.500	.467	2.145	2.5000-16 UN	2500-008-0X40

* Consult Amphenol, Sidney, NY for availability of shell sizes 44 and 48.

Receptacle Adapter Ring

Required to mate the quick disconnect plug with receptacle. Not furnished with the quick disconnect plug and must be ordered separately.

Note: Use Locktite Material on the threads for a permanent installation to the shell.

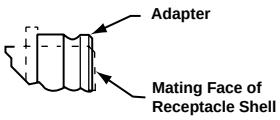

How to Order Adapter Ring

Part Number
2500-008-0 X XX

Shell Size (varies from connector shell size designation, see last column of table at left)

Finish
0 - Electroless Nickel
1 - Black Anodize
2 - Cadmium/Olive Drab
3 - Stainless Steel, Passivated

Amphenol® Matrix 5015 Connector
With RADSOK® Contacts

Amphenol Aerospace

For High Power Applications

- Mil-spec qualified, environmental Matrix MIL-DTL-5015 connectors with improved sealing
- Completely environmentally sealed with contact seals, gaskets, wire seals and insert-to-shell seals
- Special design enhanced with RADSOK contacts in the plug instead of standard rear release crimp contacts
- All the shell styles and finishes of the Matrix 5015 family are available, including firewall styles and non-decoupling styles

RADSOK contacts provide high amperage capability with minimal voltage loss and low insertion forces.

The RADSOK contact has a hyperbolic, stamped grid configuration with the socket circular. As a male pin is inserted, axial members in the female socket deflect, enabling high current flow across the connection with minimal voltage loss.

See pages 419-421 for more information on RADSOK contacts.

RADSOK

MS/STANDARD CRIMP REAR RELEASE CONTACTS

Contact Size	Wire Range AWG	Wire Range mm²	Socket Contacts Military Part Number	Socket Contacts Amphenol/Matrix Part Number	Pin Contacts Military Part Number	Pin Contacts Amphenol/Matrix Part Number
16S*	20–16	0.5–1.4	M39029/30-217	M5100-033-1601L	M39029/29-212	M5000-029-0016L
16	20–16	0.5–1.4	M39029/30-218	M5100-033-1602L	M39029/29-212	M5000-029-0016L
12	14–12	2–3	M39029/30-219	M5100-033-0012	M39029/29-213	M5000-029-0012
8	10–8†	5–8.5	M39029/30-220	M5100-033-0008	M39029/29-214	M5000-029-0008
4	6–4†	13–21	M39029/30-221	M5100-033-0004	M39029/29-215	M5000-029-0004
0	2–0†	34–60	M39029/30-222	M5100-033-0000	M39029/29-216	M5000-029-0000

* Shorter wire barrel
† Use MS3348 bushing kit to accommodate smaller wire.

Note: For information on thermocouple contacts, consult Amphenol, Sidney, NY.

CONTACT CURRENT RATING AND RETENTION

Contact Size**	Current Rating Amperes Max.	Current Rating Voltage Drop Millivolts	Contact Retention Axial Load lb.	Contact Retention Axial Load N
16	13	50	25	111.2
12	23	50	30	133.4
8	46	25	50	222.4
4	80	14	60	266.9
0	150	12	75	333.6

** Organize individual circuits to maintain heat rise within operating temperature requirements.

SEALING PLUGS

Contact Size	Sealing Plugs Military Part Number	Sealing Plugs Amphenol/Matrix Part Number
16S	MS27488-16-1	10-405996-161
16	MS27488-16-1	10-405996-161
12	MS27488-12-1	10-405996-121
8	MS27488-8-1	10-405996-081
4	MS27488-4-1	10-405996-041
0	MS27488-0-1	10-405996-001

CRIMPING TOOLS

Contact Size	Wire Range AWG	Wire Range mm²	Finished Wire Dia. Range Inch	Finished Wire Dia. Range mm	Color Code	Crimping Tool Part Number	Turret or Positioner Part Number
16S	20–16	0.5–1.4	.053–.103	1.34–2.62	Red/White	M22520/1-01	M22520/1-02
16	20–16	0.5–1.4	.053–.103	1.34–2.62	Blue/White	M22520/1-01	M22520/1-02
12	14–12	2–3	.085–.158	2.15–4.01	Yell./White	M22520/1-01	M22520/1-02
8	10–8	5–8.5	.132–.255	3.35–6.48	White/Red	M22520/23-01	M22520/23-02
4	6–4	13–21	.237–.370	6.01–9.40	White/Blue	M22520/23-01	M22520/23-04
0	2–0	34–60	.360–.550	9.14–13.97	White/Yell.	M22520/23-01	M22520/23-05

INSERTION/REMOVAL TOOLS

Contact Size	Color Code	Military Part Number	Amphenol/Matrix Part Number
16	Blue/White	M81969/14-03	10-538988-016
12	Yellow/White	M81969/14-04	10-538988-012
8	Red	M81969/14-06	6500-018-0008
4	Blue	M81969/14-07	6500-018-0004
0	Yellow	M81969/14-08	6500-018-0000

Amphenol installation instructions, L-2106, gives information on insertion, removal and crimping of contacts for Matrix MIL-DTL-5015 connectors.

Amphenol Aerospace

PLUG PROTECTION CAP 10-329393-XX*

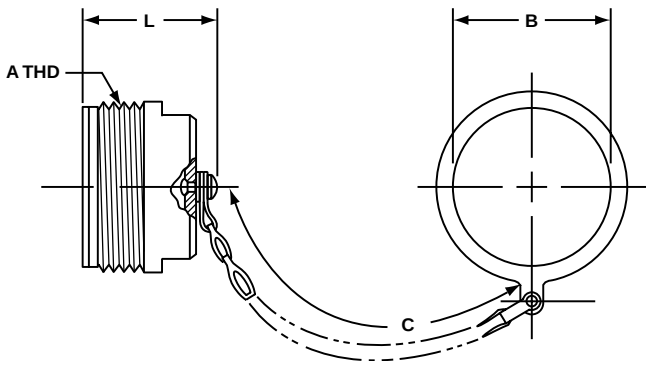

Assembly Number	A Thread Class 2A	B Dia. +.010 –.000	C Approx.	L Max.
10-329393-10	.625-24UNEF	.641	3.5	1.312
10-329393-11	.625-24UNEF	.641	3.5	1.312
10-329393-12	.750-20UNEF	.766	3.5	1.500
10-329393-14	.875-20UNEF	.891	3.5	1.500
10-329393-16	1.000-20UNEF	1.016	3.5	1.500
10-329393-18	1.125-18UNEF	1.141	3.5	1.500
10-329393-20	1.250-18UNEF	1.266	4.0	1.500
10-329393-22	1.375-18UNEF	1.391	4.0	1.500
10-329393-24	1.500-18UNEF	1.641	4.5	1.500
10-329393-28	1.750-18UNS	1.891	4.5	1.500
10-329393-32	2.000-18UNS	2.078	5.0	1.500
10-329393-36	2.250-16UN	2.328	5.0	1.500
10-329393-40	2.500-16UN	2.641	5.0	1.500
10-329393-44	2.750-16UN	2.891	6.0	1.500

PLUG PROTECTION CAP 10-229125-XX*

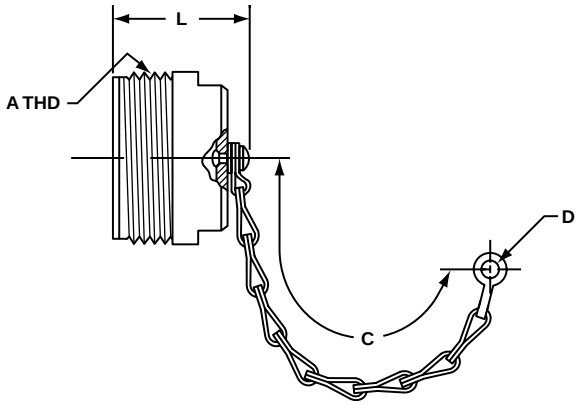

Assembly Number	A Thread Class 2A	C Approx.	D Ref.	L Max.
10-229125-10	.625-24NEF	3.0	.140	1.233
10-229125-12	.750-20UNEF	3.5	.140	1.421
10-229125-14	.875-20UNEF	3.5	.140	1.421
10-229125-16	1.000-20UNEF	3.5	.140	1.421
10-229125-18	1.125-18NEF	3.5	.140	1.421
10-229125-20	1.250-18NEF	3.5	.193	1.421
10-229125-22	1.375-18NEF	3.5	.193	1.421
10-229125-24	1.500-18NEF	4.5	.193	1.421
10-229125-28	1.750-18NS	4.5	.193	1.421
10-229125-32	2.000-18NS	5.0	.193	1.421
10-229125-36	2.250-16UN	5.0	.193	1.421
10-229125-40	2.500-16UN	5.0	.193	1.421

PLUG PROTECTION CAP MS25042-XXDA*

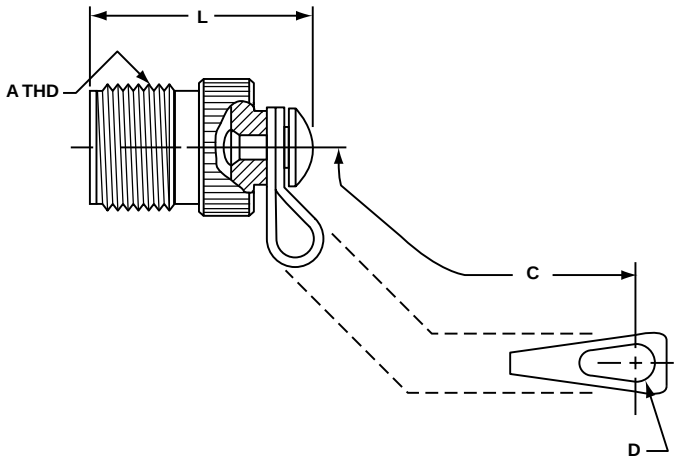

MS Number	A Thread Class 2A	B Dia. +.010 –.005	C Approx.	L Max.
MS25042-8DA	.500-28UNEF	.156	4.00	.969
MS25042-10DA	.625-24UNEF	.156	4.00	.969
MS25042-12DA	.750-20UNEF	.156	4.50	1.156
MS25042-14DA	.875-20UNEF	.156	4.50	1.156
MS25042-16DA	1.000-20UNEF	.156	4.50	1.156
MS25042-18DA	1.125-18UNEF	.156	4.50	1.156
MS25042-20DA	1.250-18UNEF	.187	5.00	1.156
MS25042-22DA	1.375-18UNEF	.187	5.00	1.156
MS25042-24DA	1.500-18UNEF	.187	5.50	1.156
MS25042-28DA	1.750-18UNS	.187	7.75	1.156
MS25042-32DA	2.000-18UNS	.218	7.75	1.156
MS25042-36DA	2.250-16UN	.218	7.75	1.156
MS25042-40DA	2.500-16UN	.218	7.75	1.156

* Protective caps are illustrated with sash chains and are available with beaded chains or without chains. Optional terminations are also available. Consult Amphenol, Sidney, NY when ordering.

Assembly Number	A Thread Class 2B	B Dia. Min.	C Approx.	D Dia. Max.	L Max.
10-329394-10	.625-24UNEF	.641	3.5	.875	.793
10-329394-12	.750-20UNEF	.766	3.5	1.000	.793
10-329394-14	.875-20UNEF	.891	3.5	1.125	.793
10-329394-16	1.000-20UNEF	1.016	3.5	1.250	.793
10-329394-18	1.125-18UNEF	1.141	3.5	1.375	1.024
10-329394-20	1.250-18UNEF	1.266	4.0	1.500	1.024
10-329394-22	1.375-18UNEF	1.391	4.0	1.625	1.024
10-329394-24	1.500-18UNEF	1.641	4.5	1.750	1.024
10-329394-28	1.750-18UNS	1.891	4.5	2.000	1.024
10-329394-32	2.000-18UNS	2.078	5.0	2.250	1.024
10-329394-36	2.250-16UN	2.328	5.0	2.500	1.024
10-329394-40	2.500-16UN	2.641	5.0	2.656	1.024
10-329394-44	2.750-16UN	2.891	6.0	2.938	1.024

RECEPTACLE PROTECTION CAP 10-329394-XX*

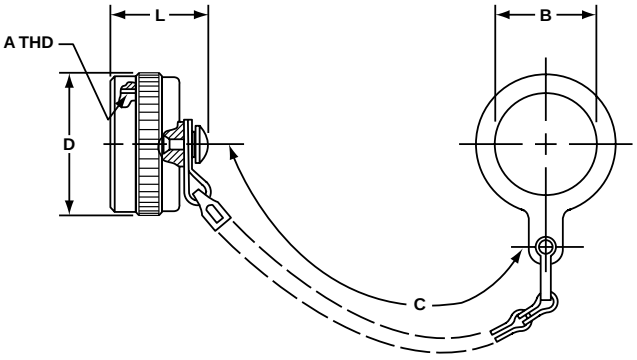

Assembly Number	A Thread Class 2B	B Ref.	C Approx.	D Dia. Max.	L Max.
10-422905-103	.625-24UNEF	.140	3.0	.875	.812
10-422905-123	.750-20UNEF	.140	3.5	1.000	.812
10-422905-143	.875-20UNEF	.140	3.5	1.125	.812
10-422905-163	1.000-20UNEF	.140	3.5	1.250	.812
10-422905-183	1.125-18UNEF	.193	3.5	1.375	1.031
10-422905-203	1.250-18UNEF	.193	4.0	1.500	1.031
10-422905-223	1.375-18UNEF	.193	4.0	1.625	1.031
10-422905-243	1.500-18UNEF	.193	4.5	1.750	1.031
10-422905-283	1.750-18UNS	.193	4.5	2.000	1.031
10-422905-323	2.000-18UNS	.193	5.0	2.250	1.031
10-422905-363	2.250-16UN	.193	5.0	2.500	1.031
10-422905-403	2.500-16UN	.193	5.0	2.656	1.031

RECEPTACLE PROTECTION CAP 10-422905-XXX*

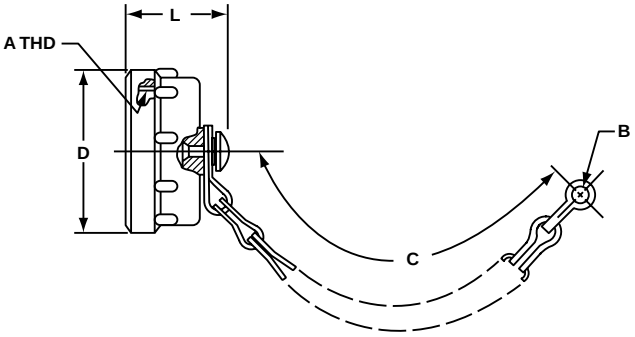

MS Number	A Thread Class 2B	B +.010 –.005	C Approx.	D Dia. Max.	L Max.
MS25043-8DA	.500-28UNEF	.140	4.00	.688	.750
MS25043-10DA	.625-24UNEF	.140	4.00	.815	.750
MS25043-12DA	.750-20UNEF	.140	4.50	1.000	.750
MS25043-14DA	.875-20UNEF	.140	4.50	1.125	.750
MS25043-16DA	1.000-20UNEF	.140	4.50	1.188	.750
MS25043-18DA	1.125-18UNEF	.140	4.50	1.344	.750
MS25043-20DA	1.250-18UNEF	.140	5.00	1.469	.750
MS25043-22DA	1.375-18UNEF	.140	5.00	1.594	.750
MS25043-24DA	1.500-18UNEF	.171	5.50	1.719	.750
MS25043-28DA	1.750-18UNS	.171	7.75	1.969	.812
MS25043-32DA	2.000-18UNS	.187	7.75	2.219	.812
MS25043-36DA	2.250-16UN	.187	7.75	2.469	.812
MS25043-40DA	2.500-16UN	.187	7.75	2.719	.812

RECEPTACLE PROTECTION CAP MS25043-XXDA*

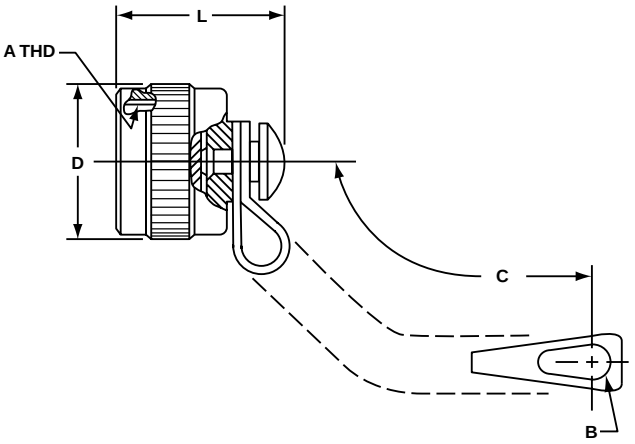

* Protective caps are illustrated with sash chains and are available with beaded chains or without chains. Optional terminations are also available. Consult Amphenol, Sidney, NY when ordering.

Amphenol Aerospace

10-70500 RECEPTACLE DUST CAP
for external threads

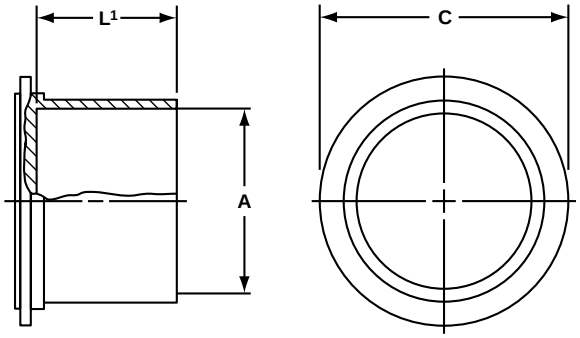

MS Shell Size	Order Number	A Dia. Nominal Thread	C Dia. ±.031	L¹ ±.062
8S	10-70500-8	.500	.750	.500
10S	10-70500-10	.625	.875	.500
10SL	10-70500-10	.625	.875	.500
12S	10-70500-12	.750	1.000	.500
12	10-70500-12	.750	1.000	.500
14S	10-70500-14	.875	1.125	.500
14	10-70500-14	.875	1.125	.500
16S	10-70500-16	1.000	1.250	.500
16	10-70500-16	1.000	1.250	.500
18	10-70500-18	1.125	1.375	.562
20	10-70500-20	1.250	1.500	.562
22	10-70500-22	1.375	1.625	.562
24	10-70500-24	1.500	1.750	.562
28	10-70500-28	1.750	1.938	.562
32	10-70500-32	2.000	2.250	.562
36	10-70500-36	2.250	2.500	.625
40	10-70500-40	2.500	2.750	.625

10-70506 PLUG DUST CAP
for internal threads

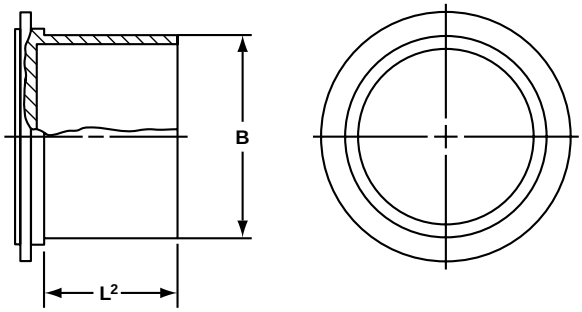

MS Shell Size	Order Number	B Dia. Min.	L² ±.125
8S	10-70506-8S	.469	.625
10S	10-70506-10S	.587	.625
10SL	10-70506-10S	.587	.625
12S	10-70506-12	.704	.625
12	10-70506-12	.704	.625
14S	10-70506-14	.828	.625
14	10-70506-14	.828	.625
16S	10-70506-16	.953	.625
16	10-70506-16	.953	.625
18	10-70506-18	1.072	.625
20	10-70506-20	1.197	.625
22	10-70506-22	1.322	.625
24	10-70506-24	1.447	.625
28	10-70506-28	1.697	.625
32	10-70506-32	1.947	.625
36	10-70506-36	2.190	.625
40	10-70506-40	2.440	.625

Additional MIL-DTL-5015 Connectors
Offered by Amphenol

MS/Standard 3100 Series, MIL-5015 Type Connectors

MIL-DTL-5015 and MIL-5015 Type Standard Circular Connectors with solder or crimp (non-rear release) contacts

Amphenol has long been the accepted leader in providing MS Standard MIL-5015 type connectors. These connectors represent well-proven electrical capability at an economical cost for most equipment where durability is important.

The MS/Standard family of connectors (3100 Series) is a very broad range of product with the following features:

- Medium to heavy weight cylindrical with resilient inserts
- Environmental resistant
- Threaded couplings, single key/keyway shell polarization
- Operating voltage to 3000 VAC (RMS) at sea level
- 5 shell styles, 19 shell sizes, 280 contact arrangements
- Solder or crimp contacts (non-rear-release type), sizes 16–0 accepting 22–0 AWG
- Coaxial or thermocouple contact options
- Alternate insert positioning
- Hermetic configurations available
- Zinc alloy plating (cadmium-free) available

The 3100 Series has five classes of connectors to meet different requirements. Within these connector styles, MIL-C-5015 has been replaced as follows: Environmental classes F and R are updated to and produced in strict accordance to MIL-DTL-5015. Classes A, C and E are still produced, but are no longer listed on the qualified products listing (QPL). Class designations and brief descriptions are as follows:

A – Solid Shell – for general, non-environmental applications.

C – Pressurized – for use on pressurized bulkheads or pressure barriers; limits air leakage regardless of type and class of plug mated with them.

E/F – Environmental Resisting with Strain Relief – designed for applications where the connector will be exposed to moisture, vibration, and rapid changes in pressure and temperature.

R – Lightweight Environmental Resisting – shorter in length, lighter in weight than the E & F classes, the MS-R offers a high degree of reliability under adverse conditions: recommended for new design applications.

Ask for Amphenol catalog 12-020 which gives detailed information on this family of connectors or visit www.amphenol-industrial.com

MIL-5015 Modifications

In order to supplement standard MS shell styles and provide a greater variety of styles for the electrical connector user, there are several MS and MS Modified cylindrical connectors offered by Amphenol. These types include flange mount plugs, thru bulkhead receptacles, jam nut receptacles, connectors for potting and connectors designed specifically to terminate jacketed cable. Ask for Amphenol catalog 12-021 for detailed information or visit www.amphenol-industrial.com.

97 Series, MIL-5015 Type Connectors

The low cost, general duty connector used extensively in the machine tool industry, welding industry and numerous other industrial applications, is the Amphenol® 97 Series. Offered in non-environmental styles, these connectors have hard dielectric inserts and threaded coupling. They are Underwriters Laboratories Recognized and Canadian Standards Association Certified.

Recent addition to this family is the 97E environmental styles, still an economical choice. The 97E can be used in a variety of industrial applications where environmental sealing is required, such as automotive and robotics.

Ask for Amphenol catalog 12-022 for detailed information or visit www.amphenol-industrial.com.

97 Series, MIL-5015 Type Connectors

Amphenol
MIL-DTL-26500, Pyle®

TABLE OF CONTENTS

MIL-DTL-26500, Pyle® Connectors

- Table of Contents. 199
- Product Introduction and Options 200
- Class Descriptions, Features, Specifications 201, 202
- Insert Arrangements, Alternate Keying 203, 204

MIL-DTL-26500 Aluminum/Stainless Steel Shell Styles:

- Threaded Coupling & Bayonet Coupling Quick Reference Charts 205
- Ratchet Lock Coupling Quick Reference Charts 206
- How to Order, Threaded/Bayonet, Military & Commercial 207, 208
- Square Flange Mounted Receptacle, Threaded MS24264, Pyle ZZY 209
- Single Hole (D-hole) Mounted Receptacle,Threaded MS24265, Pyle ZZY 210
- Straight Plug, Threaded MS24266, Pyle ZZY. 211
- Square Flange Mounted Receptacle Bayonet, MS24264, Pyle ZZW 212
- Single Hole (D-hole) Mounted Receptacle, Bayonet MS24265, Pyle ZZW 213
- Straight Plug, Bayonet MS24266, Pyle ZZW 214
- Ratchet Lock Plug/New Non-Decoupling Plug, Pyle ZZY 215
- Ratchet Lock Plug/New Non-Decoupling Plug, Mating Flange Mounted Receptacle Pyle ZZY 216

MIL-DTL-26500 Firewall Class K Stainless Steel Shell Styles:

- Threaded Coupling & Bayonet Coupling Quick Reference Charts 217
- How to Order Firewall Class K 218
- How to Order Firewall Class K, Boeing Company 219
- Square Flange Mounted Receptacle, Firewall MS27613K, Pyle FPK Threaded MS27613K, Pyle® FYL Bayonet 220
- Single Hole (D-hole) Mounted Receptacle Firewall MS27614K, Pyle FPK Threaded MS27614K , Pyle FYL, Bayonet 221
- Straight Plug, Firewall MS27615K, Pyle FPK Threaded MS27615K, Pyle FYL, Bayonet Ratchet Lock Plug, Firewall MS27615K, Pyle FPK Threaded 222

MIL-DTL-26500, 48 Series Interconnect Products:

- Receptacle Short Shirt & Wire Splice Connector 223, 224

MIL-DTL-26500 Hermetic Receptacle Shell Styles:

- Pyle ZZL/ZZB Hermetic Receptacles (three styles) Threaded or Bayonet 225

Contacts & Accessories

- Shielded Coaxial Contacts, Contact Terminating Tools, Assembly Instructions, Cable Supports, Dummy Receptacles, Protection Caps 226-235

MIL-DTL-26500, Pyle® Typical Markets:

- Military & Commercial Aviation
- High Temperature Applications
- Meets Boeing Specifications
- Missiles & Ordnance

Amphenol Aerospace

High quality and dependability are the earned reputations of the Amphenol®/Pyle Series of connectors designed to meet the specification requirements of MIL-DTL-26500. Serving such diverse fields as avionics, missile systems, aircraft general-purpose applications, aircraft engines and firewalls, the Amphenol/Pyle MIL-DTL-26500 connector family meets the myriad of problems with innovative connector solutions.

High quality and dependability are the earned reputations of the Amphenol/Pyle Series of connectors designed to meet the specification requirements of MIL-DTL-26500. Serving such diverse fields as avionics, missile systems, aircraft general-purpose applications, aircraft engines and firewalls, the Amphenol/Pyle MIL-DTL-26500 connector family meets the myriad of problems with innovative connector solutions.

Amphenol /Pyle MIL-DTL-26500 Connectors are medium sized connectors with a rugged design, lightweight construction and continuously dependable performance. This product family provides the following design features and options:

Aluminum Connectors - Military Classes R and G; Proprietary (ZZY, ZZW)

- General purpose, environmentally resistant
- Threaded or bayonet coupling
- Square flange or single hole receptacles, and straight plug shell styles
- Black anodize non-conductive finish for class R and a conductive finish in class G that provides a minimum resistance path through the shell for grounding purposes
- Coupling nuts are hard coat treated for added protection against wear
- Rear accessory threads accommodate standard MS27291 series cable supports or related accessory hardware

Stainless Steel Connectors - Military Class E; Proprietary (ZZY, ZZW)

- Machined from 300-series stainless steel providing superior strength and wear characteristics
- Threaded or bayonet coupling
- Shells experience a less than 10% loss in yield strength at elevated temperatures, 204°C (399°F)
- Shell hardware resists corrosion for the life of the connector without the need of additional finishes
- Same shell styles offered as in aluminum
- Variety of stainless steel accessories are available

Firewall Connectors – Military Class K; Proprietary (FPK, FYL)

- Meets the fireproof requirements of MIL-DTL-5015, Class K
- Threaded or bayonet coupling
- FPL - threaded coupling; same as FPK; used on Lockheed Aircraft
- FP5K - threaded coupling; same as FPK; qualified for General Electric
- Non-magnetic stainless steel shells designed for superior strength and elevated temperatures up to 460°F for extended periods
- Same shell styles as stainless steel and aluminum versions

48 Series Receptacle Short Skirt - Amphenol special application connector,

- Low profile design for restricted installation requirements
- Wire Splice Connector
- Space saving, single contact, wire splice module

Hermetic Connectors - Military Class H; Proprietary (ZZL, ZZB)

- See page 225 for brief description
- See page 225 for hermetic insert availability
- Consult Amphenol, Sidney, NY for availability and ordering information.

Contacts and Accessories for MIL-DTL-26500 connectors

- SAE AS39029 qualified contacts and special application contacts including thermocouple, printed circuit board and shielded/coaxial types
- Boeing specification contacts
- Aluminum and stainless steel cable supports; aluminum dummy receptacles
- Contact crimping/ installation/removal tools for Amphenol 48 series and Pyle-National MIL-DTL-26500 series

MIL-DTL-26500, Pyle® Connectors
Features and Class Descriptions

Amphenol®/Pyle MIL-DTL-26500 Connectors are qualified to Military Specification MIL-DTL-26500, as well as numerous high performance customer specifications. These connectors are available in aluminum or stainless steel shells, with bayonet or threaded coupling, and are qualified to meet the specifications of the following MIL-DTL-26500 classes:

MIL-DTL-26500 Classes	Amphenol/ Pyle Series Classes	Hardware Description	Finish
Class R: (Environmental Resistant)	A	Aluminum Alloy	Anodize
Class G	M	Aluminum Alloy	Chromium
Class E	R	Stainless Steel	Passivated
Class K Firewall	FPK/FYL	Stainless Steel	Passivated
Class H Hermetic	HC	CRS/Stainless Steel	Various

Crimp Contacts
Rear-insertable, front-releasable, crimp style contacts are machined from a copper alloy material, plated gold over nickel, and are qualified to specification SAE AS39029.

Contacts are crimp terminated outside the connector assembly and inserted into the appropriate cavity by means of a hand tool. Socket contacts utilize a multi-tined construction and feature a “C” spring which grips the tines, and insures consistent and repetitive insertion/ withdrawal forces. Contact tines are protected by a stainless steel shroud.

An optional pencil-clip thermocouple socket design is also offered. See page 226 for more information on thermocouple contacts.

Alternate Keying
All MIL-DTL-26500 Series Connector shells can be furnished with normal or any of five alternate key positions. (See page 204). Each plug shell has a master key and four alternate keys. The position of the alternate keys in relation to the fixed master key determines the key identification. Inserts are bonded to the shell in relation to the master key, thus allowing positive protection against mis-mating when differing circuits exist side by side.

Connector Sealing
The insert design utilizes a combination of resilient and rigid insulators to offer a connector with total sealing capabilities. Bonded interfaces between the resilient and rigid dielectric components eliminate air voids and thus protect the connector from potential degradation due to moisture and altitude conditions.

In Firewall Class K connectors, the resilient insert forms the primary contact seal and is bonded to a molded ceramic rigid insert. The insert assembly is physically bonded and mechanically retained to the inside surface of the stainless steel shell, providing a void-less, mono-block configuration impervious to adverse environments.

A pressure seal at the connector interface is accomplished through the aid of a coupling device which compresses the front resilient insulations and thus offers a seal around each contact which prevents the passage of air or moisture through the contact cavity.

Back resilient insulators are designed with a triple sealing grip at each wire hole to offer positive sealing and prevent wicking of moisture through the connector without the use of external clamping rings or adapters.

In addition, a dynamic “O” ring seal engages the front of the plug shell when connectors are mated and offers yet another barrier to moisture and containments.

Fluid/Temperature Resistance
The fluorosilicone compound elastomer, developed by Pyle-National, exceeds all specification requirements and provides excellent resistance to tear, compression set, fluids, and high temperatures.

Amphenol/Pyle’s fluorosilicone compound offered in Class R, G, E and K is capable of reliability resisting:

- MIL-H-5606 hydraulic fluid
- MIL-L-9236 lubricating oil
- MIL-L-7808 and MIL-L-23699 lubricating oils
- MIL-J-5624 (JP-5) jet fuel
- Glycol
- Alkaline cleaning solutions of pH 10 or higher.

Test methods are as defined in MIL-DTL-26500 specification. Alternate compounds have been developed by Pyle-National to solve unique user requirements not addressed by the specifications.

Connectors have the capability of resisting high ambient temperatures up to 200°C (392°F) for long periods of time, thus contributing to an extended connector life. Connectors will withstand a combined ambient and internal temperature due to thermal rise of current carrying capacity of 238°C (469°F).

Amphenol®/Pyle® Firewall, Class K, connectors have the inherent ability to resist high temperatures up to 460°F (total temperature) for extended periods of time and can resist short time exposures (20 minutes) to prevent passage of a direct 2000°F flame.

TEST REQUIREMENTS	MILITARY SPECIFICATIONS	PYLE CONNECTOR CAPABILITIES
Air Leakage (Classes E, G, R & K)	1 cu. inch per hr. max. -55°C (-67°F)	Comply
Altitude Immersion (Classes E, G, R & K)	Sea level 1 inch of mercury, 3 cycles (IR 5000 megohms hi-pot 1500 volts-submerged)	Comply
Contact Retention (Classes E, G, R & K)	Size 20 contact 20 lbs. min. Size 16 contact 25 lbs. min. Size 12 contact 30 lbs. min.	Exceeds specifications
Collet Retention	No requirement	Without damage to the collet or its retention means: Size 20 – 75 lbs. min. Size 16 – 140 lbs. min Size 12 – 160 lbs. min.
Contact Insertion Force (Classes E, G, R & K)	All size contacts 10 lbs. max.	Comply
Coupling Forces	Torque required to couple and uncouple mating plugs and receptacles is not to exceed the values listed: Shell size Torque inch lbs. 8 10 12 14 16 18 20 22 24 9 10 14 17 23 26 31 38 46	Comply
Fluid Resistance (Classes E, G, R & K)	20 hrs. immersion in MIL-H-5606 hydraulic fluid and MIL-L-9236 lubrication oil. Must meet hi-pot.	20 hrs. min., fully functional physically and electrically after immersion. No deterioration of resilient material.
Ground Resistance (Class G)	.250 ohms backshell of plug to rear of receptacle flange.	Comply
High Potential (Classes E, G, R & K)	1500 VRMS mated & unmated at sea level 1000 VRMS mated to 110,000 ft. altitude	Exceed with ample margin of safety.
Insert Retention (Classes E, G, R & K)	75 psi. from either direction for 5 seconds.	Exceeds specifications.
Insulation Resistance (Classes E, G, R & K)	21°C (70°F), 5000 megohms between adjacent contacts and any contact and shell.	Exceeds specifications.
Low Temperature (Classes E, G, R & K)	-55°C (-67°F)	Comply
Magnetic Permeability (Classes E, G, R & K)	2 mu. maximum	Comply
Moisture Resistance (Classes E, G, R & K)	1000 megohms min. per Mil-std. 202 method 106	Comply
Ozone Exposure (Classes E, G, R & K)	0.10 to .015% ozone exposure	Comply
Physical Shock (Classes E, G, R & K)	50 G's, 3 axis, per mil-std-202, method 213, test condition C, wired to monitor 1 microsecond discontinuity.	Comply
Sand & Dust Exposure (Classes E, G, R & K)	No requirement.	Meet MIL-E-5272 condition "B"
Temperature Life (Classes E, G, R & K)	Connector fully functional for 1000 hours at 200°C (392°F) ambient internal temperature 238°C (460°F)	Comply
Thermal Shock (Mated) (Classes E, G, R & K)	Cycled five times from -55°C to 260°C, held for 30 minutes at each temperature and transferred to the other in 2 minutes or less, with no evidence of damage.	Comply
Vibration (Classes E, G, R & K)	MIL-Std. 202 method 204 condition "D" at R.T., -55°C (-67°F) and +200°C (+392°F).	Comply - monitored for a max. of 1 microsecond discontinuity.
Flame Resistance (Class K)	Performance requirements of Paragraph 4.5.18 Fireproof (Class K of MIL-DTL-5015D)	Exceeds specifications

Front Face of Pin Insert or Rear Face of Socket Insert Illustrated
Contact cavities are identified with a spiral guide line indicating cavity sequence. The first and last cavities are numbered and every tenth cavity is bracketed.
Symmetrical about center line.

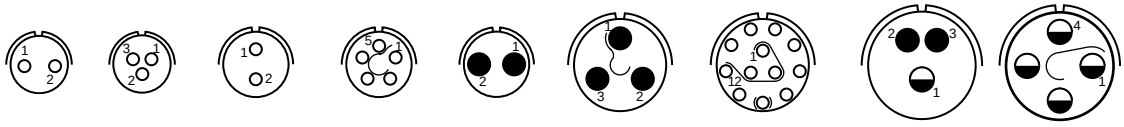

Insert Arrangement	08-02	08-03 H	10-02**	10-05H	10-20H	12-03KH	12-12H	14-03		14-04K
Service Rating	I	I	I	I	I	I	I	I		I
Number of Contacts	2	3	2	5	2	3	12	2	1	4
Contact Size	20	20	20	20	16	16	20	16	12 Shielded Coaxial	12

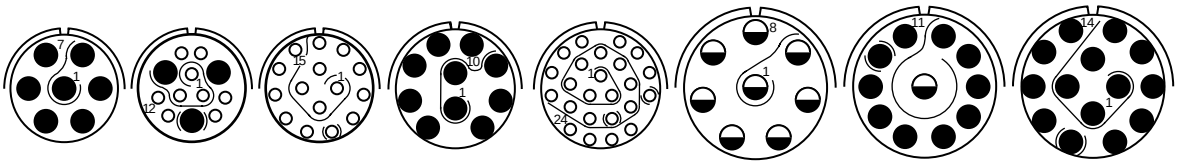

Insert Arrangement	14-07KH	14-12		14-15KH	16-10KH	16-24KH	18-08KH	18-11		18-14KH
Service Rating	I	I		I	I	I	I	1		I
Number of Contacts	7	9	3	15	10	24	8	10	1	14
Contact Size	16	20	16	20	16	20	12	16	12 Shielded Coaxial	16

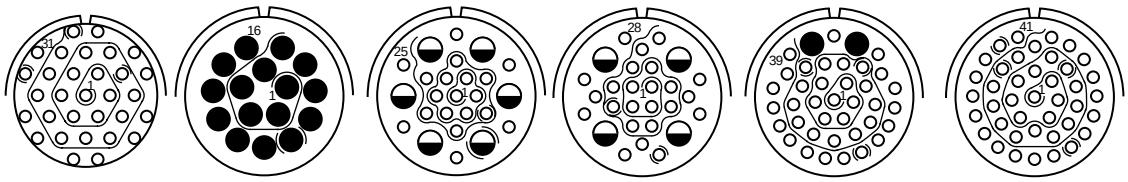

Insert Arrangement	18-31KH	20-16	20-25		20-28**		20-39		20-41
Service Rating	I	I	I		I		I		I
Number of Contacts	31	16	19	6	24	4	37	2	41
Contact Size	20	16	20	12	20	12	20	16	20

† designates Non-MS Configurations.
K designates Firewall Class K inserts.
H designates Hermetic inserts.

CONTACT LEGEND ○ 20 ● 16 ◒ 12

Front Face of Pin Insert or Rear Face of Socket Insert Illustrated

Contact cavities are identified with a spiral guide line indicating cavity sequence. The first and last cavities are numbered and every tenth cavity is bracketed.
Symmetrical about centerline.

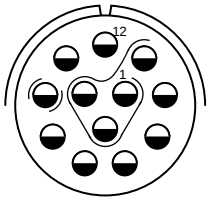

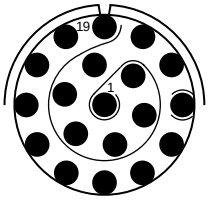

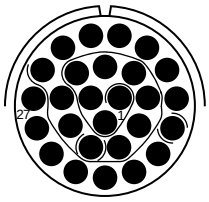

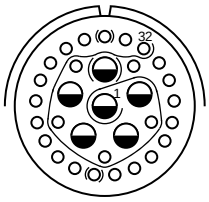

Insert Arrangement	22-12[K]	22-19[KH]	22-27†	22-32
Service Rating	I	I	I	I
Number of Contacts	12	19	27	26 6
Contact Size	12	16	16	20 12

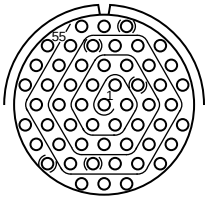

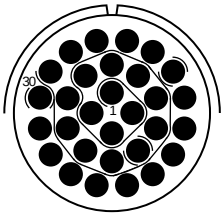

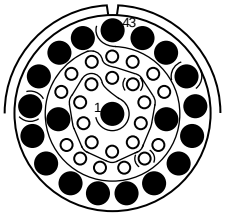

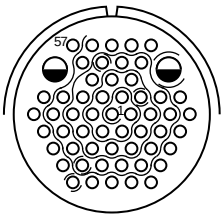

Insert Arrangement	22-55[KH]	24-30†[K]	24-43**	24-57
Service Rating	I	I	I	I
Number of Contacts	55	30	23 20	55 2
Contact Size	20	16	20 16	20 12

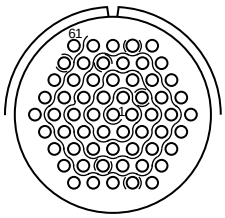

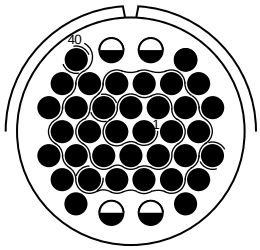

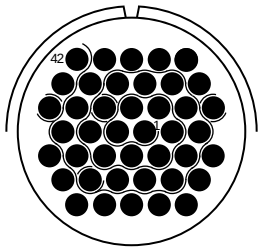

Insert Arrangement	24-61	28-40†[K]	28-42†[K]
Service Rating	I	I	I
Number of Contacts	61	36 4	42
Contact Size	20	16 12	16

† designates Non-MS Configurations.
K designates Firewall Class K inserts.
H designates Hermetic inserts.

CONTACT LEGEND 20 ○ **16** ● **12** ◒

Alternate Keying Positions of Shells

ALTERNATE POLARITY KEYWAY ARRANGEMENTS (Shell sizes 12, 14, 16, 18, 20, 22, 24, 28) View of front face of receptacle shell. Angles are counter-clockwise from "N" keyway. For plug shell, the key locations are clockwise when viewed from front of plug.

Position	For Connectors Size 8 and 10				For Connectors Size 12, 14, 16, 18, 20, 22, 24 and 28			
	A	B	C	D	A	B	C	D
Normal	105°	140°	215°	265°	105°	140°	215°	265°
6	102°	132°	248°	320°	18°	149°	192°	259°
7	80°	118°	230°	312°	92°	152°	222°	342°
8	35°	140°	205°	275°	84°	152°	204°	334°
9	64°	155°	234°	304°	24°	135°	199°	240°
Y or 10*	25°	115°	220°	270°	98°	152°	268°	338°

* Y is used for all Military part number call-outs - aluminum/stainless steel and firewall; 10 is used for Amphenol/Pyle part number call-outs - aluminum/stainless steel only. (See how to order pages 207, 208 and 218).

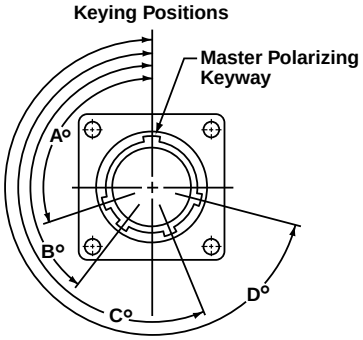

Shown is Engaging Face View of Receptacle Shell with Keyways (Plug Shell Keys would be Opposite)

THREADED COUPLING
PYLE ZZY
MS2426X( )TXX

Shell Style (Stainless Steel pictured)	Basic Performance Level	Hardware Description*	Class*	Basic Part Number**
Square Flange Mounted Receptacle Threaded Coupling	General Purpose, Environmental Resistant	Aluminum	Military Class R or G	MS24264(R or G)XXTXX
			Pyle A or M Series	ZZY-(Aor M)X-17XX
	Superior Strength, Corrosion Resistance up to 204°C (399°F)	Stainless Steel	Military Class E	MS24264EXXTXX
			Pyle R Series	ZZY-RX-17XX
Single Hole (D-Hole) Mounted Receptacle Threaded Coupling	General Purpose, Environmental Resistant	Aluminum	Military Class R or G	MS24265(R or G)XXTXX
			Pyle A or M Series	ZZY-(Aor M)X-15XX
	Superior Strength, Corrosion Resistance up to 204°C (399°F)	Stainless Steel	Military Class E	MS24265EXXTXX
			Pyle R Series	ZZY-RX-15XX
Straight Plug Threaded Coupling	General Purpose, Environmental Resistant	Aluminum	Military Class R or G	MS24266(R or G)XXTXX
			Pyle A or M Series	ZZY-(A or M)X-10XX
	Superior Strength, Corrosion Resistance up to 204°C (399°F)	Stainless Steel	Military Class E	MS24266EXXTXX
			Pyle R Series	ZZY-RX-10XX

BAYONET COUPLING
PYLE ZZW
MS2426X( )BXX

Shell Style (Stainless Steel pictured)	Basic Performance Level	Hardware Description*	Class*	Basic Part Number**
Square Flange Mounted Receptacle Bayonet Coupling	General Purpose, Environmental Resistant	Aluminum	Military Class R or G	MS24264(R or G)XXBXX
			Pyle A or M Series	ZZW-(A or M)X-17XX
	Superior Strength, Corrosion Resistance up to 204°C (399°F)	Stainless Steel	Military Class E	MS24264EXXTXX
			Pyle R Series	ZZW-RX-17XX
Single Hole (D-Hole) Mounted Receptacle Bayonet Coupling	General Purpose, Environmental Resistant	Aluminum	Military Class R or G	MS24265(R or G)XXBXX
			Pyle A or M Series	ZZW-(A or M)X-15XX
	Superior Strength, Corrosion Resistance up to 204°C (399°F)	Stainless Steel	Military Class E	MS24265EXXTXX
			Pyle R Series	ZZW-RX-15XX
Straight Plug Bayonet Coupling	General Purpose, Environmental Resistant	Aluminum	Military Class R or G	MS24266(R or G)XXBXX
			Pyle A or M Series	ZZW-(A or M)X-10XX
	Superior Strength, Corrosion Resistance up to 204°C (399°F)	Stainless Steel	Military Class E	MS24266EXXTXX
			Pyle R Series	ZZW-RX-10XX

NA designates not available
* See how to order, page 207, for further description of hardware classes.
** See how to order, page 207, to complete part numbers.

RATCHET LOCK PLUG, BAYONET
PYLE ZZY

Shell Style (Stainless steel only)	Basic Performance Level	Hardware Description*	Class*	Basic Part Number**
Ratchet Lock Plug Non-Decoupling	Superior Strength, Corrosion Resistance up to 204°C (399°F) Employs ratchet feature in last 120° of rotation to eliminate need for safety-wiring	Stainless Steel only	Pyle R Series (Commercial only)	ZZY-RX-12XX
NNDC Plug New Non-Decoupling	Superior Strength, Corrosion Resistance up to 204°C (399°F)	Stainless Steel only	Pyle R Series (Commercial only)	ZZY-RX-13XX

* See how to order, page 207, for further description of hardware classes.
** See how to order, page 207, to complete part numbers.

RATCHET LOCK PLUG & MATING FLANGE MOUNTED, THREADED RECEPTACLE
PYLE ZZY

Shell Style (Stainless steel pictured)	Basic Performance Level	Hardware Description*	Class*	Pyle Basic Part Number**
Ratchet Lock Plug Non-Decoupling	Designed to meet high vibration requirements beyond MIL-DTL-26500.	Aluminum	Pyle A Series	ZZY (A, D, F, M) X-12 (D, E or F) XX
		Stainless Steel	Pyle R Series	ZZY-RX-12 (D, E or F)XX
Square Flange Mounted Receptacle Threaded Coupling	Designed to meet high vibration requirements beyond MIL-DTL-26500.	Aluminum	Pyle A Series	ZZY (A or F) X-17(D, E or F) XX
		Stainless Steel	Pyle R Series	ZZY-RX-17 (D, E or F) XX

* See how to order, page 208, for further description of hardware classes.
** See how to order, page 208, to complete part numbers.

Amphenol Aerospace

Easy Steps to build a part number... Military

1. Shell Style	2. Service Class	3. Shell Size	4. Coupling Type	5. Insert Arrangement	6. Contact Type	7. Alternate Keying
MS24266	R	22	T	55	P	6

Step 1. Select a Shell Style

	Designates
MS24264	Square Flange Mounted Receptacle
MS24265	Single D-Hole Mounted Receptacle
MS24266	Straight Plug

Step 2. Select a Service Class

	Designates
R	Aluminum, non-conductive (black anodize finish)
G	Aluminum, conductive (chromium finish)
E	Stainless steel, Passivated

Step 3. Select a Shell Size

8	10	12	14	16	18	20	22	24

Step 4. Select a Coupling Type

	Designates
T	Threaded
B	Bayonet

Step 5. Select an Insert Arrangement from page 203 & 204

See page 203 & 204 for Shell Size & Insert Arrangements. First number represents Shell Size, second number is the Insert Arrangement.

Step 6. Select a Contact Type

	Designates
P	Pin Contacts
S	Socket Contacts

Step 7. Select an Alternate Keying Position of Shell

6, 7, 8, 9, Y (N for Normal) See page 204.

Easy Steps to build a part number... Pyle Commercial

1. Shell Style	2. Service Class	3. Contacts/ Accessories	4. Shell Style	5. Shell Size	6. Insert Arrangement	7. Contact Type	8. Alternate Keying	9. Contact Plating	10. Deviations/ Specials
ZZY	A	C	10	22	55	P	6	D	XXX

Step 1. Select a Shell Style

	Designates
ZZY	Threaded Coupling
ZZW	Bayonet Coupling

Step 2. Select a Service Class

	Designates
A	Aluminum, non-conductive (black anodize finish)
D	Aluminum, O.D. CAD/Ni
F	Aluminum, Clear Cadmium plated
M	Aluminum, conductive (chromium finish)
R	Stainless steel, Passivated

Step 3. Select Contacts & Accessories

	Designates
No Digit	with contacts and cable support
C	without cable support, with contacts
D	without contacts, with cable support
O	without contacts or cable support

Accessory threads for aluminum and stainless steel hardware differ, and care should be taken in selection of alternate accessory hardware that will conform to the threads noted in the dimensional tables within this catalog.

Step 4. Select a Shell Style

	Designates
10	Straight Plug
12	Non-Decoupling Plug(Ratchet Lock)
13	New Non-Decoupling Plug (NNDC) (SS only)
15	Single Hole Mounting Receptacle
17	Square Flange Receptacle

Step 5. Select a Shell Size

8	10	12	14	16	18	20	22	24	28

Step 6. Select an Insert Arrangement from page 203 & 204

See page 203 & 204 Shell Size & Insert Arrangements. First number represents Shell Size, second number is the Insert Arrangement.

Step 7. Select a Contact Type

	Designates
P	Pin Contacts
S	Socket Contacts

Step 8. Select an Alternate Keying Position of Shell

06, 07, 08, 09, 10 (Omit for Normal) See page 204.

Step 9. Select a Contact Plating

	Designates
D	Gold
T	Rhodium

Step10. Deviation/ Specials

Consult Amphenol for more information.

MIL-DTL-26500, Pyle® – How to Order
Ratchet Lock Plug, Mating Flange Receptacle

Amphenol®/Pyle® connectors are specifically designed to meet high vibration requirements above and beyond the specification requirements of MIL-DTL-26500. The plug connector features a unique non-decoupling device which offers a ratchet mechanism designed to engage as the threaded connectors approach a bottomed condition. Connector coupling assembly continues to ratchet for approximately 120 degrees until the mated connectors reach a complete metal-to-metal bottomed condition. The ratchet device maintains the connectors in a fully coupled condition, thus eliminating the need for safety wiring.

Additional features include:

- Modified accessory thread to accommodate MIL-DTL-83723 backshell hardware.
- Rear accessory teeth are featured on both the plug and receptacle shell to assure non-rotation of accessory hardware
- Intermateable with all MIL-DTL-26500 threaded connectors of like insert arrangement and key position

Easy Steps to build a part number... Pyle Commercial

1. Shell Style	2. Service Class	3. Contacts & Accessories	4. Shell Style	5. Accessory Style	6. Insert Arrangement	7. Contact Type	8. Alternate Keying	9. Contact Plating	10. Deviations/ Specials
ZZY	A	C	12	D	14	04	P	06	D

Step 1. Select a Shell Style

	Designates
ZZY	Threaded Coupling

Step 2. Select a Service Class

	Designates
A	Aluminum, non-conductive (black anodize finish)
D	Aluminum, O.D. CAD/Ni
F	Aluminum, Clear Cadmium plated
M	Aluminum, conductive (chromium finish)
R	Stainless steel, Passivated

Step 3. Select Contact & Accessory

	Designates
No Digit	With contacts and clamp
C	With contacts
O	Without contacts

Step 4. Select a Shell Style

	Designates
12	Non-Decoupling Plug, (Ratchet Lock)
13	New Non-Decoupling Plug (NNDC) (SS only)
17	Square Flange Mounted Receptacle

Step 5. Select Accessory Style

	Designates
D	Rear accessories per MIL-DTL-83723, 3 Accessory Serrations.
E	Rear accessories per MS 3155 (360° Accessory Serrations)
F	Rear accessories per MS 3155 with EMI Band (360° Accessory Serrations)

Accessory threads for aluminum and stainless steel hardware differ, and care should be taken in selection of alternate accessory hardware that will conform to the threads noted in the dimensional tables within this catalog.

Step 5. Select a Shell Size

10	12	14	16	18	20	22	24	28

Step 6. Select an Insert Arrangement from Page 203 & 204

Shell Size & Insert Arrangements are on pages 203 & 204. First number represents Shell Size, second number is the Insert Arrangement.

Step 7. Select a Contact Type

	Designates
P	Pin Contacts
S	Socket Contacts

Step 8. Select an Alternate Keying Position of Shell

06, 07, 08, 09, 10 (Omit for Normal) See page 204

Step 9. Select a Contact Plating

	Designates
D	Gold plate per MIL-DTL-39029
T	Rhodium plate per MIL-DTL-26636

Step 10. Deviations/Specials

Consult Amphenol for more information.

Part #

To complete see how to order pages 207

Military

Shell Style	Service Class	Shell Size	Coupling Type	Insert Arrangement	Contact Type	Alternate Keying
MS24264	E, R, G	XX	T	XX	X	X

Commercial

Shell Style	Service Class	Contacts & Accessories	Shell Style	Shell Size	Insert Arrangement	Contact Type	Alternate Keying	Contact Plating	Deviations/ Specials
ZZY	X	X	17	XX	XX	X	X	X	XXX

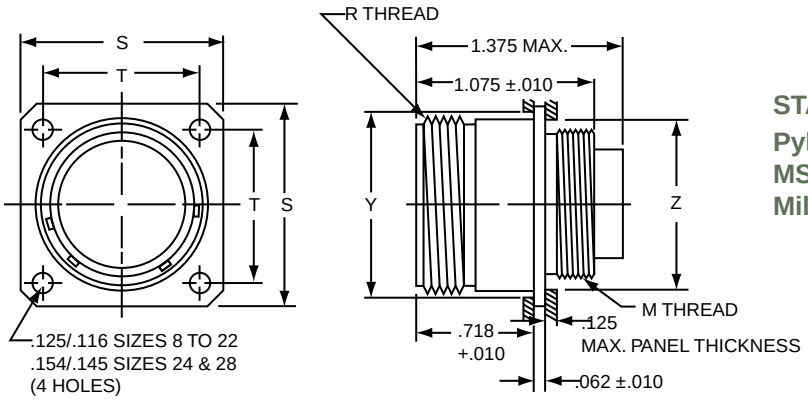

STAINLESS STEEL
Pyle ZZY-RX-17XX Series
MS24264EXXTXX
Military Class E

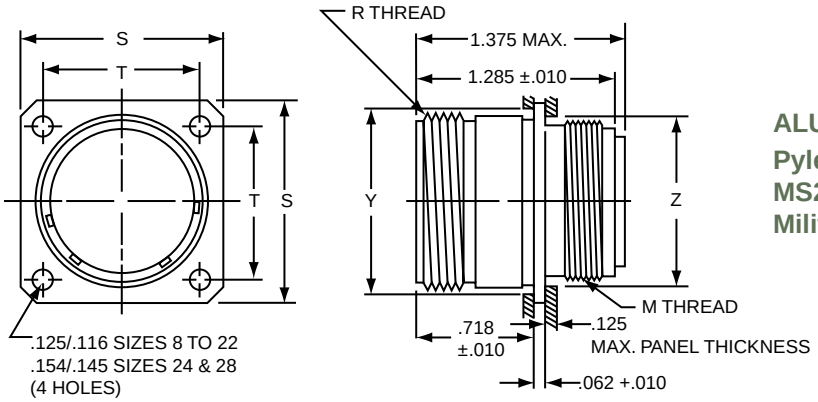

ALUMINUM
Pyle ZZY-XX-17XX Series
MS24264RXXTXX
Military Class R and G

Shell Size	M Cable Support Thread		Aluminum Connector Weight (lbs.) max including Contacts		R Coupling Thread	S Flange Width ±.005	T Mounting Hole Centers ±.005	Y Back Mount Min. Hole	Z Front Mount Min. Hole
	Steel NS-2A	Alum. UNEF-2A Modified	Pin Insert	Socket Insert					
08**	NA	.437-28	.025	.026	.562-24	.812	.594	.606	.443
10	.563-36	.562-24	.042	.044	.687-24	.937	.719	.748	.572
12	.733-36	.750-20	.061	.062	.875-20	1.031	.812	.913	.760
14	.803-36	.812-20	.072	.074	.937-20	1.125	.906	.980	.822
16	.930-36	.937-20	.087	.090	1.062-18	1.250	.969	1.107	.948
18	1.036-36	1.062-18	.110	.112	1.187-18	1.343	1.062	1.209	1.072
20	1.161-36	1.187-18	.130	.134	1.312-18	1.437	1.156	1.325	1.197
22	1.286-36	1.312-18	.152	.159	1.437-18	1.562	1.250	1.452	1.322
24	1.411-36	1.437-18	.181	.188	1.562-18	1.703	1.375	1.577	1.448
28†	1.661-36	NA	NA	NA	1.812-16	2.000	1.562	1.827	1.700

NA designates not available. ** Not available in Stainless Steel. † Not available in Aluminum.
All dimensions for reference only.

MS24265, Pyle® ZZY, MIL-DTL-26500
Single Hole (D-Hole) Mounted Receptacle, Threaded

Part #

To complete see how to order pages 207

Military

Shell Style	Service Class	Shell Size	Coupling Type	Insert Arrangement	Contact Type	Alternate Keying
MS24265	E or R	XX	T	XX	X	X

Commercial

Shell Style	Service Class	Contacts & Accessories	Shell Style	Shell Size	Insert Arrangement	Contact Type	Alternate Keying	Contact Plating	Deviations/ Specials
ZZY	X	X	15	XX	XX	X	X	X	XXX

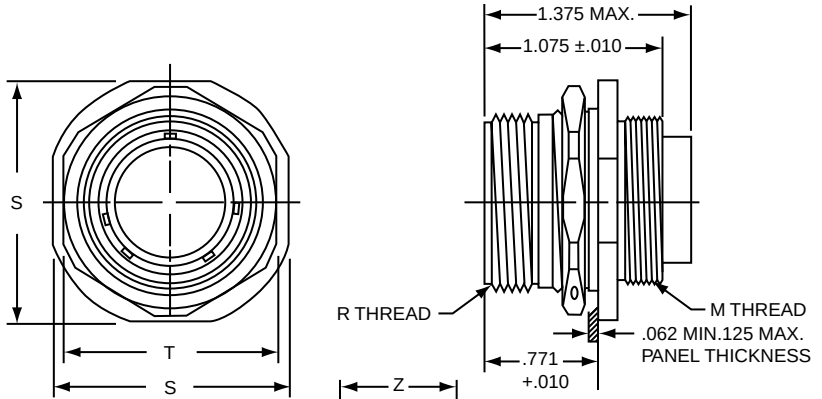

STAINLESS STEEL
Pyle ZZY-RX-15XX Series
MS24265EXXTXX
Military Class E

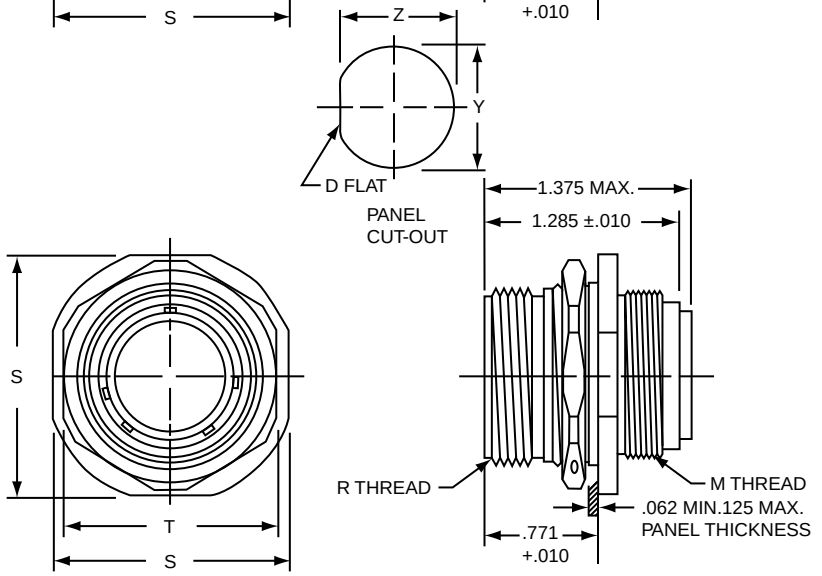

ALUMINUM
Pyle ZZY-XX-15XX Series
MS24265RXXTXX
Military Class R

Shell Size	M Cable Support Thread		Aluminum Connector Weight (lbs.) max including Contacts		R Coupling Thread	S Flange Width ±.005	T Lock Nut Flats		Y Dia Mounting Hole	Z Flat Mounting Hole	Rec. min. Torque Jam Nut Inch/Lbs.
	Steel NS-2A	Alum. UNEF-2A Modified	Pin Insert	Socket Insert			Steel	Alum.			
08	NA	NA	NA	NA	NA	NA	NA	NA	NA	NA	NA
10	.563-36	.562-24	.049	.050	1.171-24	1.104	.937	.937	.760	.730	36
12**	NA	.750-20	.069	.070	.875-20	1.291	1.125	1.125	.947	.917	56
14	.803-36	.812-20	.087	.089	.937-20	1.391	1.062	1.187	1.010	.980	65
16	.930-36	.937-20	.104	.106	1.062-18	1.516	1.187	1.312	1.135	1.105	69
18	1.036-36	1.062-18	.131	.133	1.187-18	1.614	1.312	1.437	1.260	1.225	81
20	NA	NA	.152	.157	NA	NA	NA	NA	NA	NA	100
22	1.286-36	1.312-18	.181	.187	1.312-18	1.954	1.562	1.687	1.510	1.475	123
24	1.411-36	1.437-18	.208	.212	NA	NA	NA	NA	NA	NA	133
28	NA	NA	NA	NA	NA	NA	NA	NA	NA	NA	NA

NA designates not available. ** Not available in Stainless Steel.
All dimensions for reference only.

Part

To complete see how to order pages 207

Military

Shell Style	Service Class	Shell Size	Coupling Type	Insert Arrangement	Contact Type	Alternate Keying
MS24266	E or R	XX	T	XX	X	X

Commercial

Shell Style	Service Class	Contacts & Accessories	Shell Style	Shell Size	Insert Arrangement	Contact Type	Alternate Keying	Contact Plating	Deviations/ Specials
ZZY	X	X	10	XX	XX	X	X	X	XXX

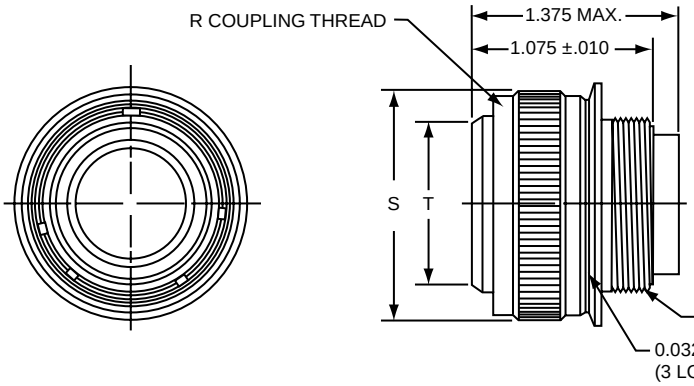

STAINLESS STEEL
Pyle ZZY-RX-10XX Series
MS24266EXXTXX
Military Class E

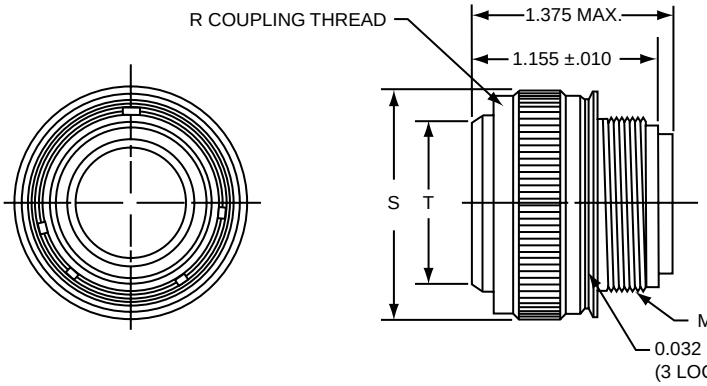

ALUMINUM
Pyle ZZY-XX-10XX Series
MS24266RXXTXX
Military Class R

Shell Size	M Cable Support Thread		Aluminum Connector Weight (lbs.) max including Contacts		R Coupling Thread	S Dia. Max Coupling Nut		T Shell Dia. +.000 –.005
	Steel NS-2A	Alum. UNEF-2A Modified	Pin Insert	Socket Insert		Steel	Alum.	
08**	NA	.437-28	.030	.031	.562-24	NA	.776	.424
10	.563-36	.562-24	.044	.045	.687-24	.826	.906	.526
12	.733-36	.750-20	.063	.064	.875-20	.996	1.078	.696
14	.803-36	.812-20	.074	.076	.937-20	1.066	1.141	.765
16	.930-36	.937-20	.091	.094	1.062-18	1.193	1.266	.892
18	1.036-36	1.062-18	.110	.112	1.187-18	1.299	1.375	.998
20	1.161-36	1.187-18	.133	.136	1.312-18	1.424	1.510	1.123
22	1.286-36	1.286-18	.154	.160	1.437-18	1.549	1.625	1.248
24	1.411-36	1.437-18	.184	.188	1.562-18	1.674	1.670	1.373
28†	1.661-36	NA	NA	NA	1.812-16	1.912	NA	1.623

NA designates not available. ** Not available in Stainless Steel. † Not available in Aluminum.
All dimensions for reference only.

Part

To complete see how to order pages 207

Military

Shell Style	Service Class	Shell Size	Coupling Type	Insert Arrangement	Contact Type	Alternate Keying
MS24264	E or R	XX	B	XX	X	X

Commercial

Shell Style	Service Class	Contacts & Accessories	Shell Style	Shell Size	Insert Arrangement	Contact Type	Alternate Keying	Contact Plating	Deviations/ Specials
ZZW	X	X	17	XX	XX	X	X	X	XXX

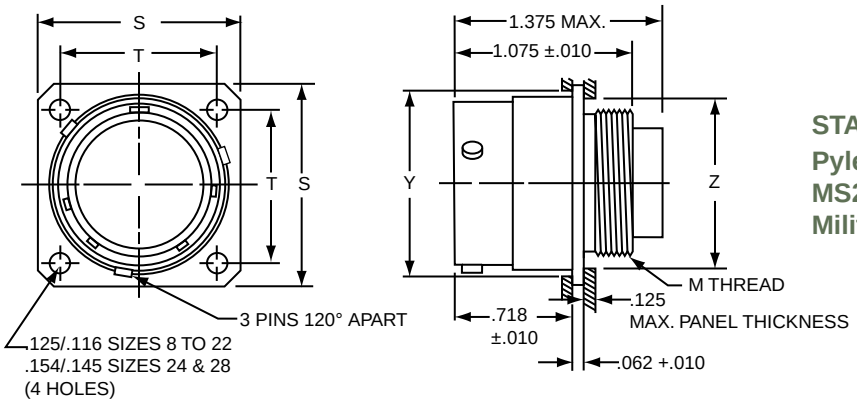

STAINLESS STEEL
Pyle ZZW-RX-17XX Series
MS24264EXXBXX
Military Class E

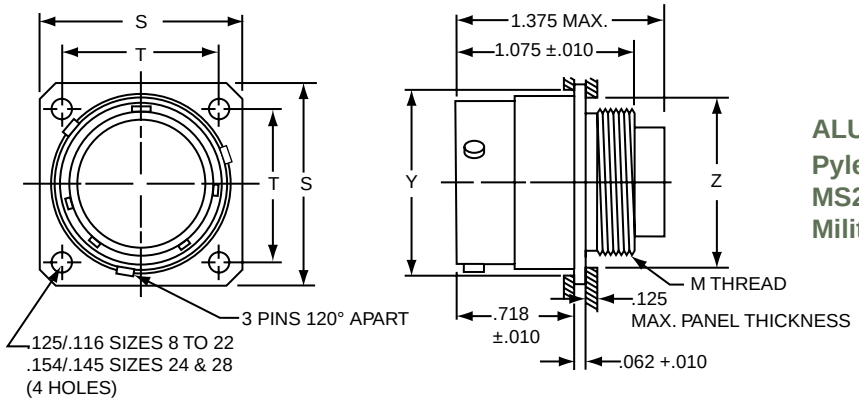

ALUMINUM
Pyle ZZW-XX-17XX Series
MS24264RXXBXX
Military Class R

Shell Size	M Cable Support Thread		Aluminum Connector Weight (lbs.) max including Contacts		S Flange Width ±.005	T Mounting Hole Centers ±.005	Y Back Mount Min. Hole	Z Front Mount Min. Hole
	Steel NS-2A	Alum. UNEF-2A Modified	Pin Insert	Socket Insert				
08**	NA	.437-28	.025	.026	.812	.594	.606	.443
10	.563-36	.562-24	.042	.044	.937	.719	.748	.572
12	.733-36	.750-20	.061	.062	1.031	.812	.913	.760
14	.803-36	.812-20	.072	.074	1.125	.906	.980	.822
16	.930-36	.937-20	.087	.090	1.250	.969	1.107	.948
18	1.036-36	1.062-18	.110	.112	1.343	1.062	1.209	1.072
20	1.161-36	1.187-18	.130	.134	1.437	1.156	1.325	1.197
22	1.286-36	1.312-18	.152	.159	1.562	1.250	1.452	1.322
24**	NA	1.437-18	.181	.188	1.703	1.375	1.577	1.447
28	NA	NA	NA	NA	NA	NA	NA	NA

NA designates not available. ** Not available in Stainless Steel. All dimensions for reference only.

Amphenol Aerospace

Part

To complete see how to order pages 207

Military

Shell Style	Service Class	Shell Size	Coupling Type	Insert Arrangement	Contact Type	Alternate Keying
MS24265	E or R	XX	B	XX	X	X

Commercial

Shell Style	Service Class	Contacts & Accessories	Shell Style	Shell Size	Insert Arrangement	Contact Type	Alternate Keying	Contact Plating	Deviations/ Specials
ZZW	X	X	15	XX	XX	X	X	X	XXX

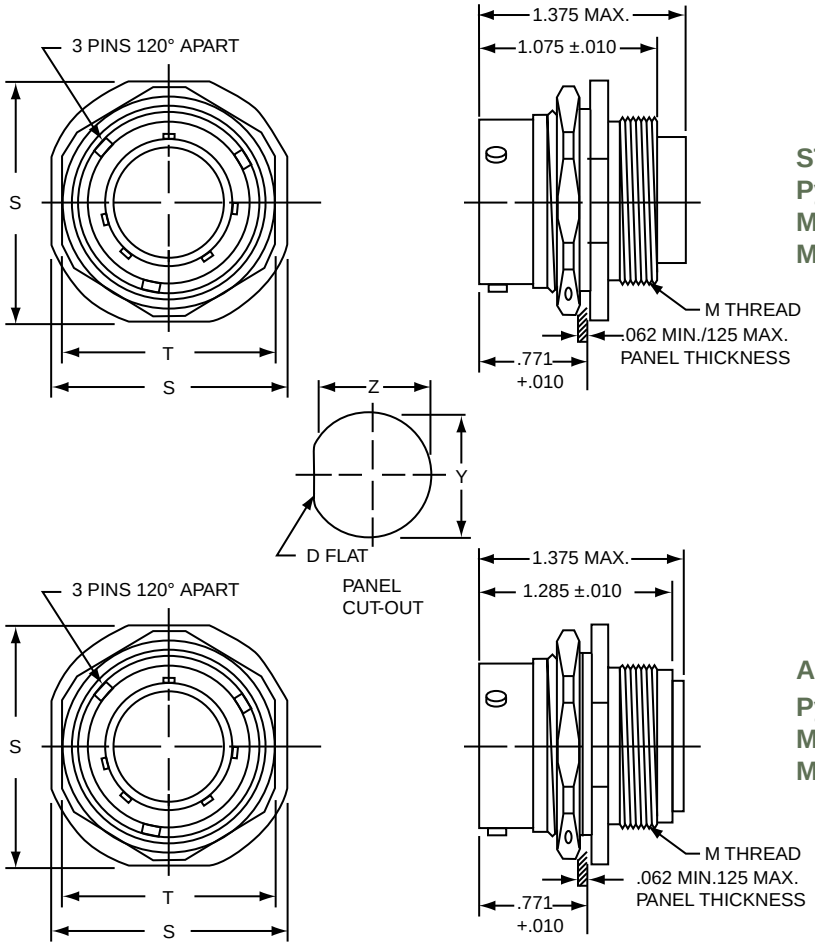

STAINLESS STEEL
Pyle ZZW-RX-15XX Series
MS24265EXXBXX
Military Class E

ALUMINUM
Pyle ZZW-XX-15XX Series
MS24265RXXBXX
Military Class R

Shell Size	M Cable Support Thread		Aluminum Connector Weight (lbs.) max including Contacts		S	T Lock Nut Flats		Y Dia Mounting Hole	Z Flat Mounting Hole	Recom. min. Torque Jam Nut Lb. - inches
	Steel NS-2A	Alum. UNEF-2A Modified	Pin Insert	Socket Insert	Flange Width ±.005	Steel	Alum.			
08**	NA	.437-28	.029	.030	.979	NA	.812	.635	.605	33
10	.563-36	.562-24	.049	.050	1.104	.937	.937	.760	.730	36
12**	NA	.750-20	.069	.070	1.291	1.125	1.125	.947	.917	56
14	.803-36	.812-20	.087	.089	1.391	1.062	1.187	1.010	.980	65
16	.930-36	.937-20	.104	.106	1.561	1.187	1.312	1.135	1.105	69
18	1.036-36	1.062-18	.131	.133	1.641	1.312	1.437	1.260	1.225	81
20	1.161-36	1.187-18	.152	.157	1.766	1.562	NA	1.385	1.350	100
22	1.286-36	1.312-18	.181	.187	1.954	1.585	1.687	1.510	1.475	123
24	1.411-36	1.437-18	.208	.212	2.079	1.687	1.812	1.635	1.600	133
28	NA	NA	NA	NA	NA	NA	NA	NA	NA	NA

NA designates not available. ** Not available in Stainless Steel. All dimensions for reference only.

Part

To complete see how to order pages 207

Military

Shell Style	Service Class	Shell Size	Coupling Type	Insert Arrangement	Contact Type	Alternate Keying
MS24266	E or R	XX	B	XX	X	X

Commercial

Shell Style	Service Class	Contacts & Accessories	Shell Style	Shell Size	Insert Arrangement	Contact Type	Alternate Keying	Contact Plating	Deviations/ Specials
ZZW	X	X	10	XX	XX	X	X	X	XXX

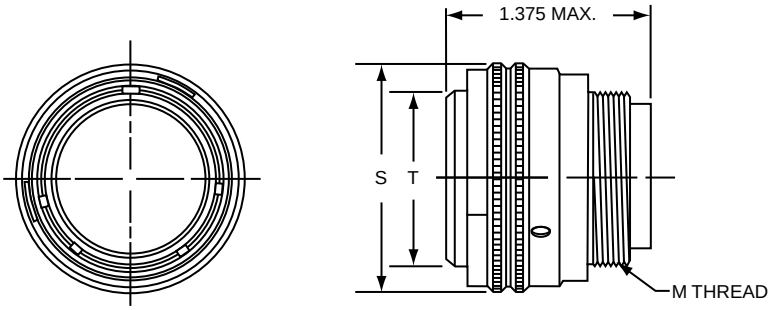

STAINLESS STEEL
Pyle ZZW-RX-10XX Series
MS24266EXXBXX
Military Class E

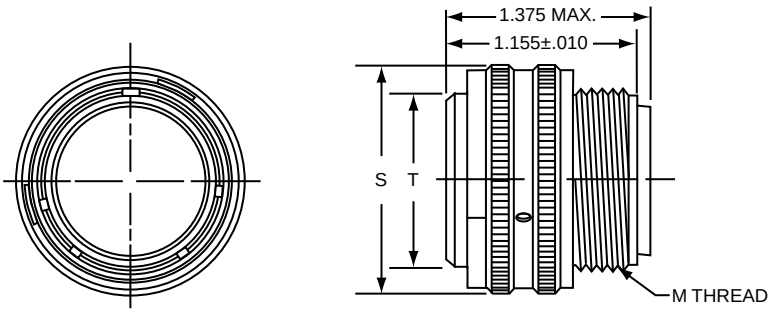

ALUMINUM
Pyle ZZW-XX-10XX Series
MS24266RXXBXX
Military Class R

Shell Size	M Cable Support Thread		Aluminum Connector Weight (lbs.) max including Contacts		S Dia Max. Coupling Nut		T Shell Dia. +.000 –.005
	Steel NS-2A	Alum. UNEF-2A Modified	Pin Insert	Socket Insert	Steel	Alum.	
08**	NA	.437-28	.030	.031	NA	.762	.424
10	.563-36	.562-24	.044	.045	.848	.904	.526
12	.733-36	.750-20	.063	.064	1.018	1.076	.696
14	.803-36	.812-20	.074	.076	1.087	1.122	.765
16	.930-36	.937-20	.091	.094	1.214	1.264	.892
18	1.036-36	1.062-18	.110	.112	1.320	1.373	.998
20	1.161-36	1.187-18	.133	.136	1.445	1.503	1.123
22	1.286-36	1.312-18	.154	.160	1.570	1.623	1.248
24	1.411-36	1.437-18	.184	.188	1.695	1.752	1.373
28	NA	NA	NA	NA	NA	NA	NA

NA designates not available. ** Not available in Stainless Steel.
All dimensions for reference only.

Part # To complete see how to order pages 207 — **Commercial**

Shell Style	Service Class	Contacts & Accessories*	Shell Style	Shell Size	Insert Arrangement	Contact Type	Alternate Keying	Contact Plating	Deviations/ Specials
ZZY	X	X	12	XX	XX	X	X	X	XXX
ZZY	X	X	13	XX	XX	X	X	X	XXX

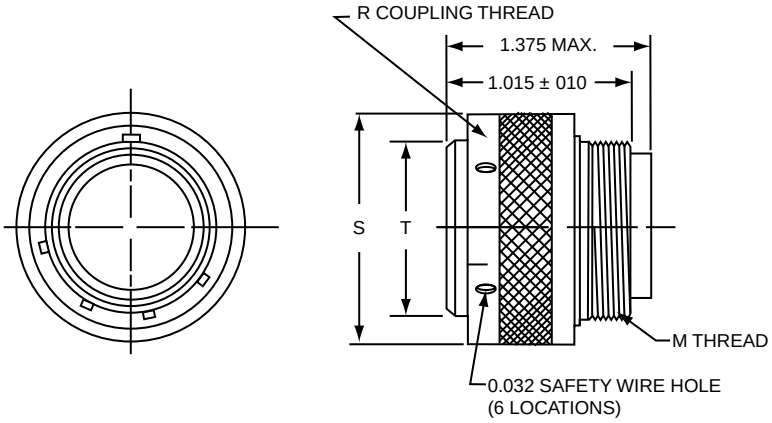

RATCHET LOCK PLUG
STAINLESS STEEL/ ALUMINUM
Pyle ZZY-XX-12XX Series

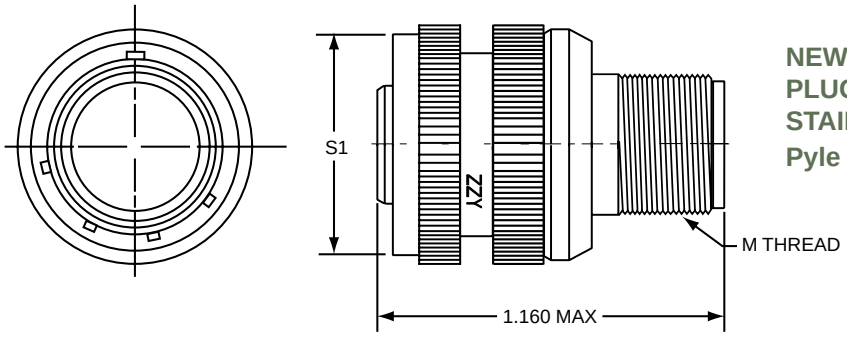

NEW NON-DECOUPLING PLUG
STAINLESS STEEL
Pyle ZZY-RX-13XX Series

Shell Size	M Thread Cable Support	R Thread Coupling	S Dia Coupling Nut	S1 Dia Coupling Nut	T Shell Dia.
08	.434-36	.562-24	.800	.820	.424
10	.563-36	.687-24	.934	.946	.526
12	.733-36	.875-20	1.114	1.088	.696
14	.803-36	.937-20	1.178	1.191	.765
16	.930-36	1.062-18	1.305	1.314	.892
18	1.036-36	1.312-18	1.411	1.420	.998
20	1.161-36	1.312-18	1.550	1.545	1.123
22	1.286-36	1.437-18	1.661	1.670	1.248
24	1.411-36	1.562-18	1.786	1.805	1.373
28	1.661-36	1.812-16	2.041	2.110	1.623

All dimensions for reference only.

Part # To complete see how to order pages 208 — **Commercial**

Shell Style	Service Class	Contacts & Accessories*	Shell Style	Shell Size	Insert Arrangement	Contact Type	Alternate Keying	Contact Plating	Deviations/ Specials
ZZY	X	X	12 or 13	XX	XX	X	X	X	XXX

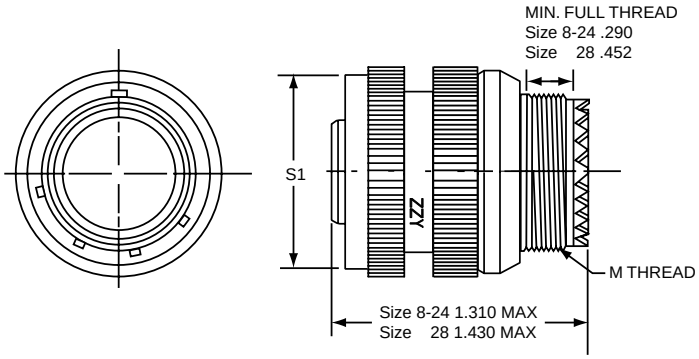

NEW NON-DECOUPLING PLUG MATING
Serrations per MS3155
STAINLESS STEEL/ALUMINUM
Pyle ZZY- XX-13XXX Series

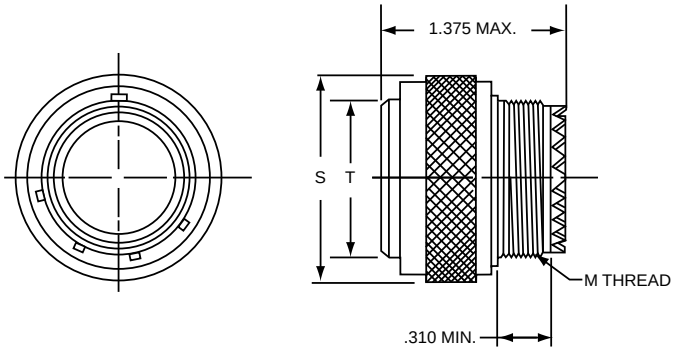

RATCHET LOCK PLUG
With MIL-DTL-83723 Accessory
Serrations per MS3155
STAINLESS STEEL/ALUMINUM
Pyle ZZY- XX-12XXX Series

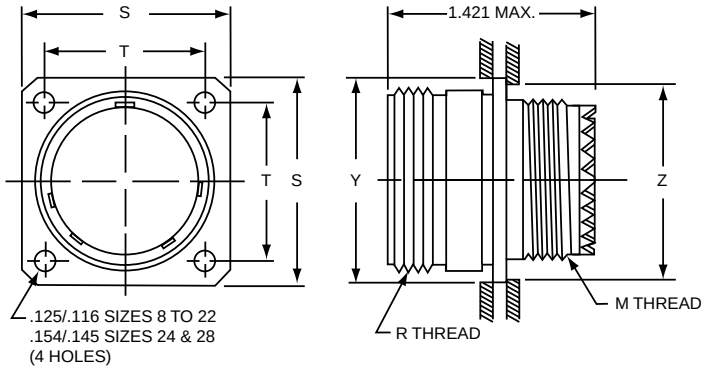

MATING SQUARE FLANGE MOUNTED, THREADED RECEPTACLE
STAINLESS STEEL/ALUMINUM
Pyle ZZY-XX-17XX Series

Shell Size	M Thread Cable Support	Plug		Receptacle					
		S Dia Max. Coupling Nut	T Shell Dia. +.000 –.005	R Coupling Thread	S Flange Width ±.005	S1 Dia Coupling Nut	T Mounting Hole Centers ±.005	Y Back Mount Hole (min.)	Z Front Mount Hole (min.)
08	NA	NA	NA	NA	NA	.820	NA	NA	NA
10	.6250-24	.945	.526	.6875-24	.937	.946	.719	.706	.635
12	.7500-20	1.165	.696	.8750-20	1.031	1.088	.812	.885	.760
14	.8750-20	1.230	.765	.9375-20	1.125	1.191	.906	.947	.885
16	1.0000-20	1.353	.892	1.0625-18	1.250	1.314	.969	1.072	1.010
18	1.0625-18	1.468	.998	1.1875-18	1.343	1.420	1.062	1.197	1.072
20	1.1875-18	1.607	1.123	1.3125-18	1.437	1.545	1.156	1.322	1.197
22	1.3125-18	1.733	1.248	1.4375-18	1.562	1.670	1.250	1.447	1.322
24	1.4375-18	1.858	1.373	1.5625-18	1.703	1.805	1.375	1.572	1.448
28	1.7500-18	2.113	1.623	1.8120-16	2.000	2.110	1.562	1.822	1.760

NA designates not available. All dimensions for reference only.

THREADED COUPLING, FIREWALL, PYLE FPK, FPL, FP5K, MS2761X-KXXTXX

Shell Style (Firewall stainless steel only)	Basic Performance Level	Hardware Description*	Class*	Basic Part Number**
Square Flange Mounted Receptacle Threaded Coupling	High performance. Environmentally sealed. Resists high temperatures up to 238°C (460°F).	Class K Firewall Stainless Steel	Military Class K	MS27613-KXXTXX
			Pyle FPK or FPL or FP5K Series	FPK-17( ) or FPL-17( ) or FP5K-17( )
Single Hole (D-Hole) Mounted Receptacle Threaded Coupling	High performance. Environmentally sealed. Resists high temperatures up to 238°C (460°F).	Class K Firewall Stainless Steel	Military Class K	MS27614-KXXTXX
			Pyle FPK or FPL or FP5K Series	FPK-19( ) or FPL-19( ) or FP5K-19( )
Straight Plug Threaded Coupling	High performance. Environmentally sealed. Resists high temperatures up to 238°C (460°F).	Class K Firewall Stainless Steel	Military Class K	MS27615-KXXTXX
			Pyle FPK or FPL	FPK-11( ) or FPL-11( )
Ratchet Locking Plug Threaded Coupling	High performance. Environmentally sealed. Resists high temperatures up to 238°C (460°F).	Class K Firewall Stainless Steel	Meets Military Class K	Consult Amphenol
			Pyle FPK or FPL or FP5K Series	FPK-12( ) or FPL-12( ) or FP5K-12( )

BAYONET COUPLING, FIREWALL, PYLE FYL, MS2761X-KXXBXX

Shell Style (Firewall stainless steel only)	Basic Performance Level	Hardware Description*	Class*	Basic Part Number**
Square Flange Mounted Receptacle Bayonet Coupling	High performance. Environmentally sealed. Resists high temperatures up to 238°C (460°F).	Class K Firewall Stainless Steel	Military Class K	MS27613-KXXBXX
			Pyle FYL Series	FYL-17 ( )
Single Hole (D-Hole) Mounted Receptacle Bayonet Coupling	High performance. Environmentally sealed. Resists high temperatures up to 238°C (460°F).	Class K Firewall Stainless Steel	Military Class K	MS27614-KXXBXX
			Pyle FYL Series	FYL-19 ( )
Straight Plug Bayonet Coupling	High performance. Environmentally sealed. Resists high temperatures up to 238°C (460°F).	Class K Firewall Stainless Steel	Military Class K	MS27615-KXXBXX
			Pyle FYL Series	FYL-11 ( )

* See how to order, page 218, for further description of hardware classes.
** See how to order, page 218, to complete part numbers.

Easy Steps to build a part number... Military

1. Shell Style	2. Service Class	3. Shell Size	4. Coupling Type	5. Insert Arrangement	6. Contact Type	7. Alternate Keying	8. Cable Support
MS27613	K	14	T	7	P	6	D

Step 1. Select a Shell Style

	Designates
MS27613	Square Flange Receptacle
MS27614	Single Hole Mounting Receptacle
MS27615	Straight Plug

Step 2. Select a Service Class

	Designates
K	Firewall - Stainless steel, passivated

Step 3. Select a Shell Size

12	14	16	18	22	24	28

Step 4. Select a Coupling Type

	Designates
T	Threaded
B	Bayonet

For Ratchet Lock Plug and New Non-Decoupling Consult Amphenol

Step 5. Select an Insert Arrangement on pages 203 & 204

Shell Size & Insert Arrangements are on pages 203 & 204. First number represents Shell Size, second number is the Insert Arrangement.

Step 6. Select a Contact Type

	Designates
P	Pin Contacts
S	Socket Contacts

Step 7. Select an Alternate Keying Position

6, 7, 8, 9, Y (N for Normal) See page 204

Step 6. Select a Cable Support

	Designates
D	Long Straight (MS27658)
P	Standard Straight (MS27657)
J	Right Angle (MS27659)

(omit for normal)
See page 233

Easy Steps to build a part number... Commercial

1. Connector Type	2. Shell Style	3. Shell Size	4. Insert Arrangement	5. Contact Type	6. Less Contact/ Contact Plating	7. Alternate Keying	8. Cable Support	9. Deviations/ Specials
FPK	11	28	42	S	T	06	D	XXX

Step 1. Select a Shell Style

	Designates (Firewall, Class K Styles)
FPK	Threaded coupling, qualified to MIL-DTL-26500 and BACC63 Series
FPL	Threaded coupling, same as FPK, but used on Lockheed Aircraft
FP5K	Threaded Coupling, qualified for General Electric
FYL	Bayonet Coupling, qualified to MIL-DTL-26500

Step 2. Select a Shell Type

	Designates
11	Straight Plug
12	Ratchet Locking Threaded Plug
13	Improved Non-Decoupling Plug
17	Square Flange Receptacle
19	D-Hole Mounting Receptacle

Step 3. Select a Shell Size

12	14	16	18	22	24	28

Step 4. Select an Insert Arrangement on pages 203 & 204

Shell Size & Insert Arrangements are on page 203 & 204. First number represents Shell Size, second number is the Insert Arrangement.

Step 5. Select a Contact Type

	Designates
P	Pin Contacts
S	Socket Contacts

Step 6. Select a Contact/Contact Plating

	Designates
E	No Contacts
T	Rhodium
D	Gold Contacts

Step 7. Select an Alternate Keying Position

6, 7, 8, 9, Y (N for Normal) See page 204

Step 8. Select a Cable Support

	Designates
D	Long Straight
P	Standard Straight
J	Right Angle

(omit for normal)
See page 233

Step 9. Deviations/ Specails

Please consult Amphenol for more information.

Amphenol Aerospace

Easy Steps to build a part number... Per Boeing Company

1. Boeing Aircraft	2. Electrical Connector	3. Shell Type	4. Shell Size	5. Accessories	6. Insert Arrangement	7. Contact Type	8. Alternate Keying
BAC	C	63X	14	S	T	06	D

Step 1. Boeing Aircraft

	Designates
BAC	Boeing Aircraft Company

Step 2. Electrical Connector

	Designates
E	Electrical Connector

Step 3. Select a Shell Type

	Designates
63X	Plug, Threaded, Fire Barrier
63Y	Receptacle, Threaded Fire Barrier
63AE	Plug, Threaded, for use with No. 20 Wire Fire Barrier
63AF	Receptacle, Flange Mount, Threaded, Fire Barrier, For use with No. 20 Wire Fire Barrier.

Note: AE & AF require W11 variation on Pyle Number.

Step 4. Select a Shell Size

12	14	16	18	22	24	28

Step 5. Accessories

	Designates
C	To order with D Cable Clamp replace – with Letter C

Step 6. Select an Insert Arrangement on pages 201 & 202

Shell Size & Insert Arrangements are on page 201 & 202. First number represents Shell Size, second number is the Insert Arrangement.

Step7. Select a Contact Type

	Designates
P	Pin Contacts
S	Socket Contacts

Step 8. Select an Alternate Keying Position

6, 7, 8, 9, Y (N for Normal) See page 202

MS27613, Pyle® FPK/FYL, Firewall Class K
Square Flange Mounted Receptacle,
Threaded or Bayonet

Part #

To complete see how to order pages 218

Military

Shell Style	Service Class	Shell Size	Coupling Type	Insert Arrangement	Contact Type	Alternate Keying	Cable Support
MS27613	K	XX	B or T	XX	X	X	X

Commercial

Connector Type	Shell Style	Shell Style	Insert Arrangement	Contact Type	Contact Style	Alternate Keying	Cable Support	Deviations/ Specials
FPK or FYL	17	X	XX	XX	X	X	X	XXX

THREADED COUPLING
Class K Stainless Steel
Pyle FPK-17XX Series
MS27613KXXTXX
Military Class K

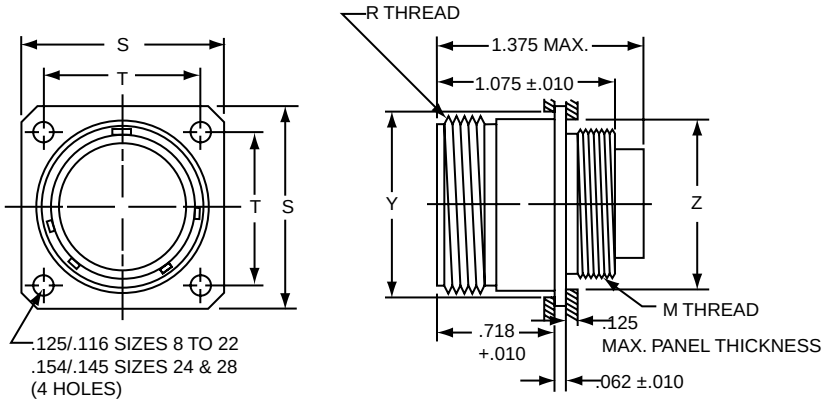

BAYONET COUPLING
Class K Stainless Steel
Pyle FYL-17XX Series
MS27613KXXBXX
Military Class K

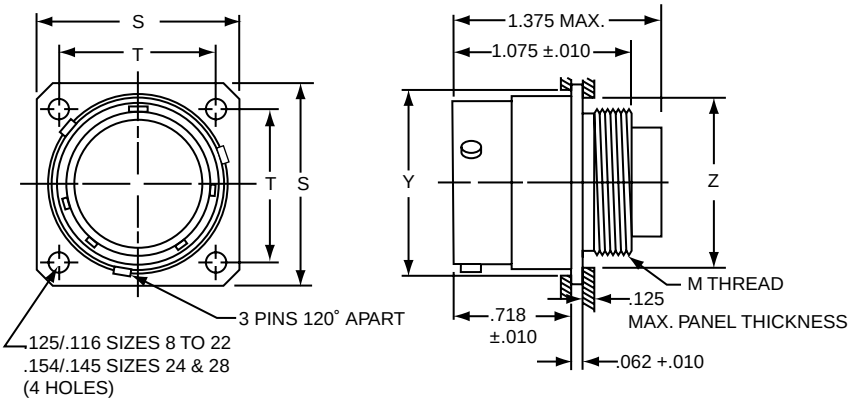

Shell Size	M Cable Support Thread	R Coupling Thread	S Flange Width ±.005	T Mounting Hole Centers ±.005	Y Back Mount Min. Hole	Z Front Mount Min. Hole
08	NA	NA	NA	NA	NA	NA
10	NA	NA	NA	NA	NA	NA
12**	.733-36	.875-20	1.031	.812	.913	.760
14	.803-36	.937-20	1.125	.906	.980	.822
16	.930-36	1.062-18	1.250	.969	1.107	.948
18	1.036-36	1.187-18	1.343	1.062	1.209	1.072
20	NA	NA	NA	NA	NA	NA
22	1.286-36	1.437-18	1.562	1.250	1.452	1.322
24**	1.411-36	1.562-18	1.703	1.375	1.577	1.422
28**	1.661-36	1.812-16	2.000	1.562	1.827	1.700

NA designates not available. ** Available in Threaded Coupling only.
All dimensions for reference only.

Threaded or Bayonet

Part #
*To complete see how to order pages 218

Military

Shell Style	Service Class	Shell Size	Coupling Type	Insert Arrangement	Contact Type	Alternate Keying	Cable Support
MS27614	K	XX	B or T	XX	X	X	X

Commercial

Connector Type	Shell Style	Shell Style	Insert Arrangement	Contact Type	Contact Style	Alternate Keying	Cable Support	Deviations/ Specials
FPK or FYL	19	X	XX	XX	X	X	X	XXX

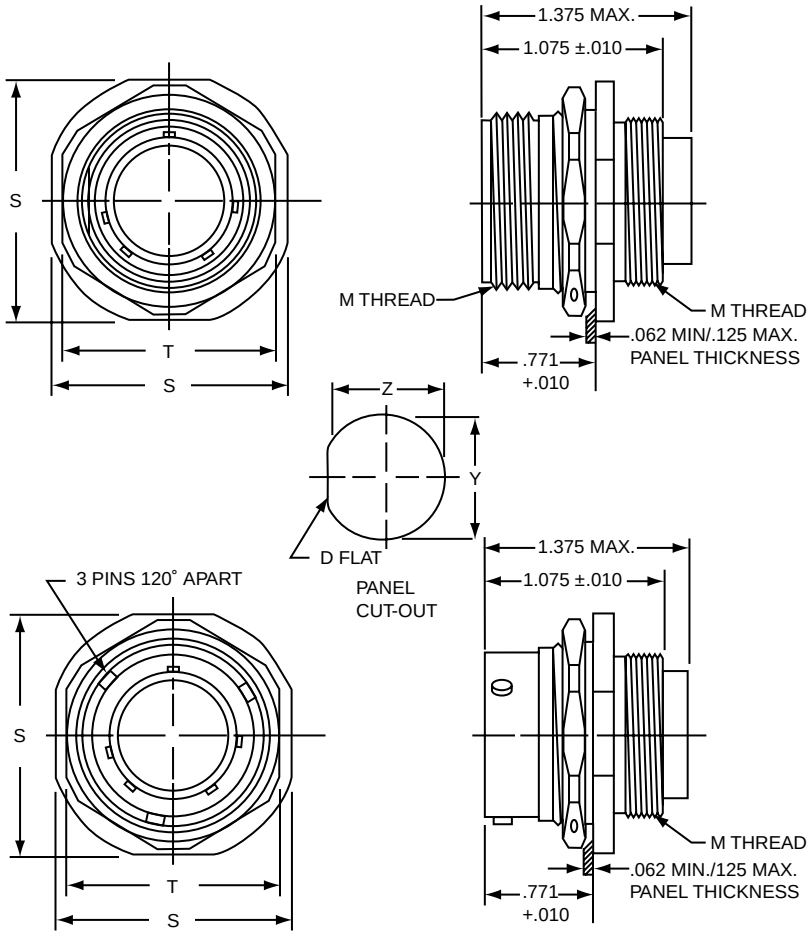

THREADED COUPLING
Class K Stainless Steel
Pyle FPK-19XX Series
MS27614KXXTXX
Military Class K

BAYONET COUPLING
Class K Stainless Steel
Pyle FYL-19XX Series
MS27614KXXBXX
Military Class K

Shell Size	M Cable Support Thread	R Coupling Thread	S Flange Width	T Lock Nut Flats	Y Mounting Hole Dia.	Z Mounting Hole Flat	Recom. min. Torque Jam Nut
08	NA	NA	NA	NA	NA	NA	33
10	NA	NA	NA	NA	NA	NA	36
12**	.733-36	.875-20	1.291	1.215	.947	.917	56
14	.803-36	.937-20	1.391	1.062	1.010	.980	65
16	.930-36	1.062-18	1.516	1.187	1.135	1.105	69
18	1.036-36	1.187-18	1.614	1.312	1.260	1.225	81
20	NA	NA	NA	NA	NA	NA	100
22**	1.286-36	1.437-18	1.954	1.562	1.510	1.475	123
24	NA	NA	NA	NA	NA	NA	133
28	NA	NA	NA	NA	NA	NA	NA

NA designates not available. ** Available in Threaded Coupling only.
All dimensions for reference only.

MS27615, Pyle® FPK/PYL Firewall Class K
Straight Plug, Threaded or Bayonet

Part #

To complete see how to order pages 218

Military

Shell Style	Service Class	Shell Size	Coupling Type	Insert Arrangement	Contact Type	Alternate Keying	Cable Support
MS27615	K	XX	B or S	XX	X	X	X

Commercial

Connector Type	Shell Style	Shell Style	Insert Arrangement	Contact Type	Contact Style	Alternate Keying	Cable Support	Deviations/ Specials
FPK or FYL	11 or 12	X	XX	XX	X	X	X	XXX

THREADED COUPLING
Class K Stainless Steel
Pyle FPK-11XX Series
MS27615KXXTXX
Military Class K

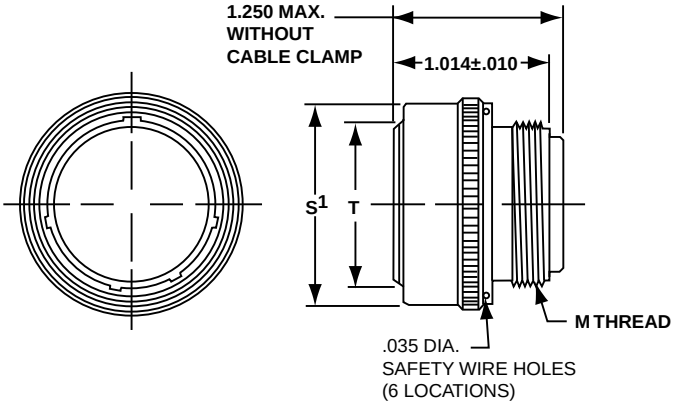

Shell Size	M Cable Support Thread	R Coupling Thread	Coupling Nut S1 Dia.	Coupling Nut S2 Dia.	T Shell Dia.
08	NA	NA	NA	NA	NA
10	NA	NA	NA	NA	NA
12	.733-36	.875-20	.984	1.018	.696
14	.803-36	.937-20	1.054	1.087	.765
16	.930-36	1.062-18	1.181	1.214	.892
18	1.036-36	1.187-18	1.287	1.320	.998
20	NA	NA	NA	NA	NA
22	1.286-36	1.437-18	1.537	1.570	1.248
24	1.411-36	1.562-18	1.662	1.695	1.373
28**	1.661-36	1.812-16	1.912	NA	1.623

** Available in Threaded Coupling only.

BAYONET COUPLING Class K Stainless Steel
Pyle FYL-11XX Series MS27615KXXBXX
Military Class K

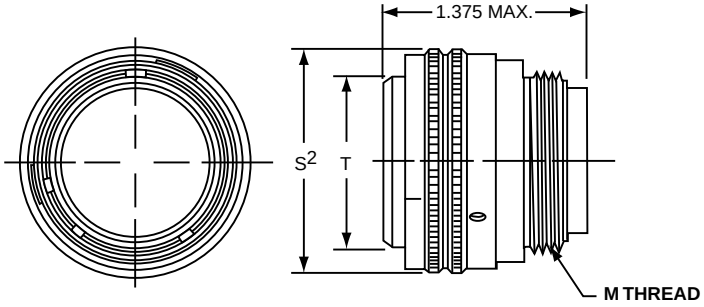

MS27615, Pyle® FPK, Firewall Class K
Ratchet Lock Plug, Threaded

RATCHET LOCK PLUG
Threaded Coupling
Class K Stainless Steel Pyle FPK-12XX Series
MS27615KXXSXX
Military Class K

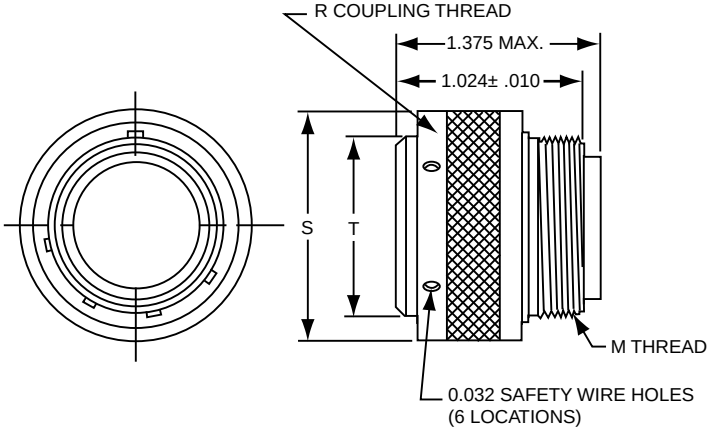

Shell Size	M Cable Support Thread	R Coupling Thread	S Coupling Nut Dia	T Shell Dia.
08	NA	NA	NA	NA
10	.563-36	.687-24	.931	.526
12	.733-36	.875-20	1.111	.696
14	.803-36	.937-20	1.175	.765
16	.930-36	1.062-18	1.302	.892
18	1.036-36	1.187-18	1.408	.998
20	NA	NA	NA	NA
22	1.286-36	1.437-18	1.658	1.248
24	1.411-36	1.562-18	1.783	1.373
28	1.661-36	1.812-16	2.038	1.623

NA designates not available.
All dimensions for reference only.

Receptacle Short Skirt – Aluminum – Bayonet Coupling

Shorter, lighter, and more economical than the standard MIL-DTL-26500 connector receptacles, the 48 Series receptacle short skirt comes in two versions: with standard flange and with reduced flange. Both versions are 1.100" long which is .275" shorter than the length of the standard MIL-DTL-26500 connector.

They have molded epoxy fiberglass inserts and can operate continuously up to 125°C (257°F), but otherwise they offer the same environmental sealing, from the panel out, as standard MIL-DTL-26500 connectors. They have bayonet coupling and mate with standard MIL-DTL-26500 plugs. The hard dielectric inserts, with resilient face seal and molded-in gold plated solder cup pin contacts, are available in insert arrangements shown in the chart below.

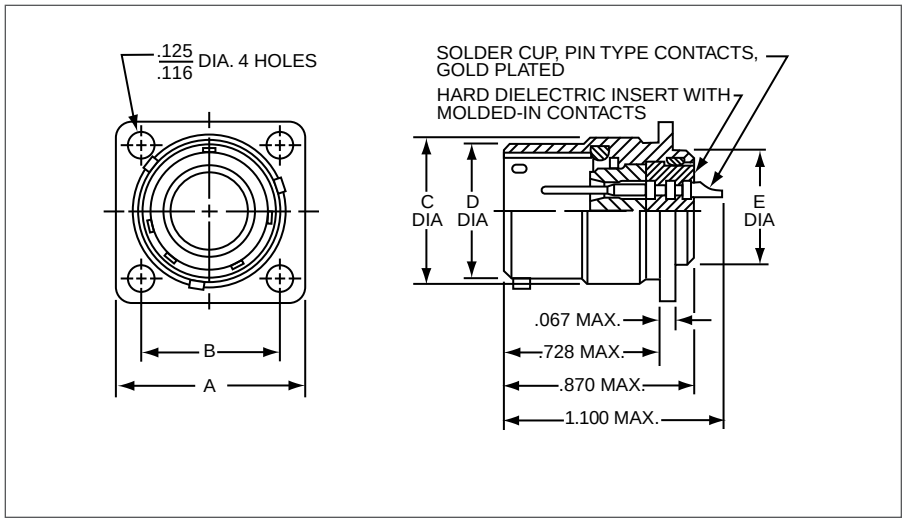

AVAILABLE WITH PIN CONTACTS ONLY

48 Series

Receptacle Short Skirt with Standard Flange

Insert Arrangement	Amphenol Part Number*	A ±.005	B ±.005	C Max.	D +.000 –.005	E Max.
10-5	48-7115-XX	.937	.719	.696	.659	.562
12-3	48-7116-XX	1.031	.812	.875	.829	.750
12-12	48-7117-XX	1.031	.812	.875	.829	.750
14-4	48-7118-XX	1.125	.906	.935	.898	.812
14-7	48-7119-XX	1.125	.906	.935	.898	.812
14-15	48-7120-XX	1.125	.906	.935	.898	.812
16-24	48-7121-XX	1.250	.969	1.062	1.025	.938
18-8	48-7122-XX	1.343	1.062	1.187	1.131	1.062
18-14	48-7123-XX	1.343	1.062	1.187	1.131	1.062
18-31	48-7124-XX	1.343	1.062	1.187	1.131	1.062
20-25	48-7251-XX	1.437	1.156	1.312	1.256	1.182
20-28	48-7175-XX	1.437	1.156	1.312	1.256	1.182
22-12	48-7125-XX	1.562	1.250	1.437	1.381	1.312
22-19	48-7126-XX	1.562	1.250	1.437	1.381	1.312
22-55	48-7127-XX	1.562	1.250	1.437	1.381	1.312

Receptacle Short Skirt with Reduced Flange

Insert Arrangement	Amphenol Part Number*	A Max.	B ±.005	C Max.	D +.000 –.005	E Max.
10-5	48-7132-XX	.870	.647	.696	.659	.562
12-3	48-7133-XX	.996	.773	.875	.829	.750
12-12	48-7134-XX	.996	.773	.875	.829	.750

* To complete part number: Replace XX with alternate keying positions (omit for normal position). See page 204.

For more information on other Amphenol®/Pyle® 48 Series products consult Amphenol, Sidney NY

Special Application Wire Splice Connector

The Amphenol® 48 Series Wire Splice Connector is a low cost, space-saving connector design that can be used for various applications. The push-mating/twist-pull-unmating feature provides a simple solution to many design requirements without sacrificing performance. This wire splice connector utilizes a metal retention clip for a single size 16 pin and socket contact.

Features and benefits include:

- Push-mating/twist-pull-unmating
- Uses standard M39029/31-229 pin and M39029/32-248 socket contacts
- Incorporates environmental sealing grommet
- Metal collet retention
- Uses standard MIL-DTL-26500 contact removable tools
- Low cost
- Weight savings design
- Space savings design
- Color coded connector halves - red or blue

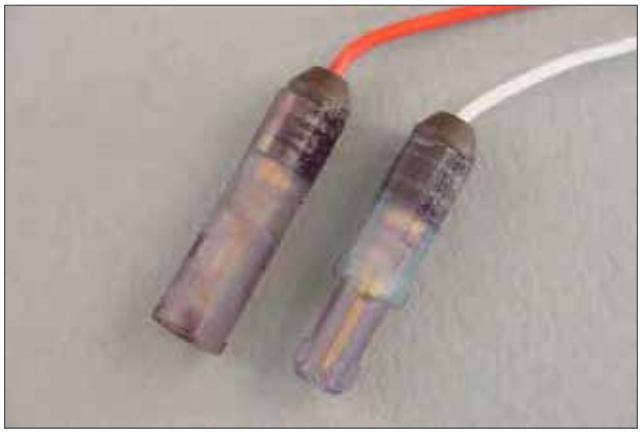

RECEPTACLE

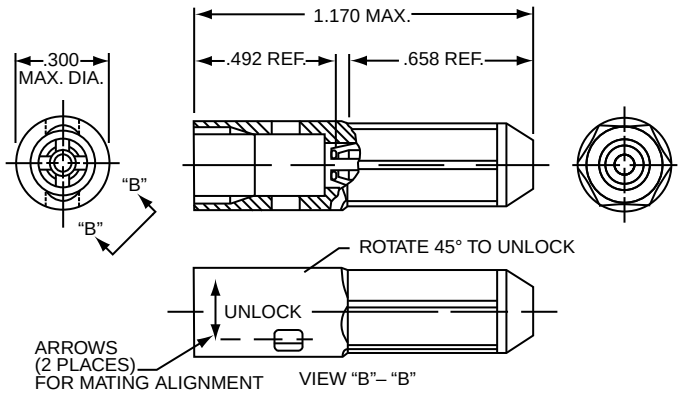

Receptacle Wire Splice

Amphenol 48 Series Part Number	Amphenol 10- Part Number	Color	Size 16 Contact Part Number
48-7191	10-804342	Blue	Pin ZZL-4016-36LD Socket ZZL-4116-36LD
48-7191-1	10-804342-1	Red	

PLUG

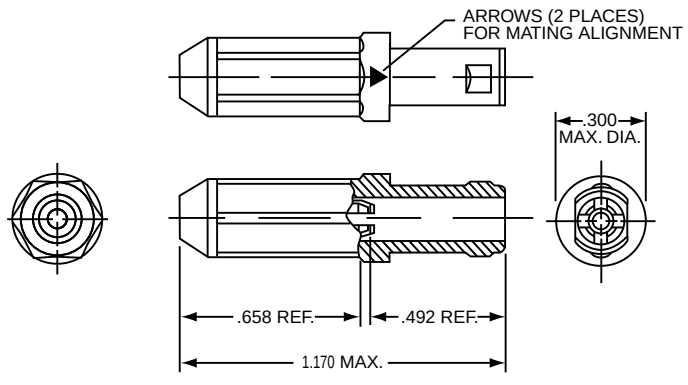

Plug Wire Splice

Amphenol 48 Series Part Number	Amphenol 10- Part Number	Color	Size 16 Contact Part Number
48-7190	10-804341	Blue	Pin ZZL-4016-36LD Socket ZZL-4116-36LD
48-7190-1	10-804341-1	Red	

Pyle® ZZL/ZZB, MIL-DTL-26500 Type
Hermetic (three styles), Threaded or Bayonet

Amphenol Aerospace

Amphenol®/Pyle® is an experienced supplier of highly reliable hermetic connectors for the aircraft industry. Amphenol's ZZL and ZZB series of hermetic receptacles are designed to the requirements of MIL-DTL-26500, they are available in stainless steel shells with gold-plated, nickel-iron alloy contacts.

Hermetic receptacles are available in shell sizes 8, 10, 12, 14, 16, 18, 22, 24 and 28. The hermetic series is offered in a variety of receptacle shell styles, which include solder mount, square flange and "D" hole mount. These connectors can be ordered with either eyelet, solder-well or printed circuit tail pin contacts.

Consult Amphenol, Sidney, NY for more information on hermetic connectors, and for optional connector designs.

Easy Steps to build a part number for Hermetic Connectors... Commercial

1.	2.	3.	4.	5.	6.	7.	8.	9.
Series	Service Class	Shell Style	Shell Size	Insert Arrangement	Contact Type	Alternate Keying	Contact Plating	Variations
ZZY	A	C	T	55	P	6	D	H45

Step 1. Select a Series

	Designates
ZZL	Threaded Coupling
ZZB	Bayonet Coupling

Step 2. Service Class

	Designates
HC	Hermetic Class

Step 3. Select a Shell Style

	Designates
14	Solder Mount Receptacle
15	Single Hole Mounting Receptacle
17	Square Flange Receptacle

Step 5. Select a Shell Size

8	10	12	14	16	18	22	24	28

Step 6. Select an Insert Arrangement

See inserts labeled with an "H" on page 203 & 204

Step 7. Select a Contact Type

	Designates
P	Male Pin Contacts with standard gold plate

Step 8. Select an Alternate Keying Position

06, 07, 08, 09, 10 (Omit for Normal)
See page 204

Step 9. Select a Contact Plating

	Designates
E	Eyelet
W	Solderwell

Consult Amphenol, Sidney, NY for ordering information of printed circuit tail contacts.

Step10. Select a Variation

	Designates
H45	304L Stainless Steel Shell
H52	Tinned Termination Tails
H56	Same as standard; gold contacts
H77	304L Stainless Steel Shell, Inconel Contacts
H127	Same as H125 except 304L Stainless Steel Shell
H146	303 Stainless Steel Shell, 100 Micro-inch Gold
H152	304L Stainless Steel Shell with Individual Beads, Loose Seals
H177	303 Stainless Steel Shell, Loose Seals
H181	Tin Plated Contacts

Crimp Contacts per MIL-DTL-39029 – Copper Alloy, Gold Plating

PIN CONTACTS				
Contact Size	Spec. Number	Bin Code	MS Number	Amphenol/Pyle No.
20	M39029/31	241	MS24254-20P	ZZL-4020-36LD*
16	M39029/31	229	MS24254-16P	ZZL-4016-36LD*
12	M39029/31	235	MS24254-12P	ZZL-4012-36LD*

SOCKET CONTACTS				
Contact Size	Spec. Number	Bin Code	MS Number	Amphenol/Pyle No.
20	M39029/32	260	MS24255-20S	ZZL-4120-36LD*
16	M39029/32	248	MS24255-16S	ZZL-4116-36LD*
12	M39029/32	254	MS24255-12S	ZZL-4112-36LD*

* Add – H139 for Boeing Marking for Pin/Socket, Standard Plating.
Add – H148 for Boeing Marking for Pin/Socket, Select Plate.

Amphenol®/Pyle® Special Application Contacts

Copper Alloy, Rhodium plated Contacts†			
Contact Size	Description	Amphenol/Pyle Pin No.	Amphenol/Pyle Socket No.
20	Copper Alloy/ Rhodium plated	ZZL-4020-36LT	ZZL-4120-36LT
16	Copper Alloy/ Rhodium plated	ZZL-4016-36LT	ZZL-4116-36LT
12	Copper Alloy/ Rhodium plated	ZZL-4012-36LT	ZZL-4112-36LT

† Contacts qualified to Boeing BACC47CN/CP.

Thermocouple Contacts					
Contact Size	Material	Amphenol/Pyle Pin No.	Amphenol/Pyle Socket No.		
			Pencil Clip Design*	Split Tine Design**	Color Code
20	Alumel Chromel Constantan	ZZL-4020-10R ZZL-4020-10P ZZL-4020-10N	ZZL-4120-10R ZZL-4120-10P ZZL-4120-10N	ZZY-4120-10R ZZY-4120-10P ZZY-4120-10N	Green White Yellow
16	Alumel Chromel Constantan	ZZL-4016-10R ZZL-4016-10P ZZL-4016-10N	ZZL-4116-10R ZZL-4116-10P ZZL-4116-10N	ZZY-4116-10R ZZY-4116-10P ZZY-4116-10N	Green White Yellow
12	Alumel Chromel Constantan	ZZL-4012-10R ZZL-4012-10P ZZL-4012-10N	ZZL-4112-10R ZZL-4112-10P ZZL-4112-10N	ZZY-4112-10P ZZY-4112-10P ZZY-4112-10N	Green White Yellow

* Pencil clip socket design - see page 201 for description.
** Split tine socket with napkin ring design - see page 201 for description.

Printed Circuit Board/Wire-Wrap Contacts

A variety of different designs are available; please consult Amphenol, Sidney, NY for more information.

Reel Contacts

2000 contacts per reel (gold or rhodium plated) are available. Consult Amphenol, Sidney, NY for more information.

Sealing Plugs

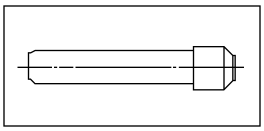

For sealing spare contact holes. Same sealing plug is used in both plug and receptacle.

Contact Size	Amphenol/Pyle No.	MS Number	Color Code
20	10-405996-20	MS-27488-20	Red
16	10-405996-16	MS-27488-16	Blue
12 & #1 Shielded	10-405996-12	MS-27488-12	Yellow
# 2 Shielded	10-405996-8	MS27187-4	White

Sealing Gaskets

For use with square flange mounted receptacles. Provide waterproofing and pressure sealing features.

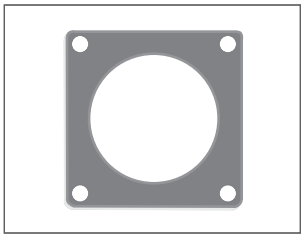

Contact Size	Amphenol/Pyle No.
08	ZZL-6508-10D
10	ZZL-6510-10D
12	ZZL-6512-10D
14	ZZL-6514-10D
16	ZZL-6516-10D
18	ZZL-6518-10D
20	ZZL-6520-10D
22	ZZL-6522-10D
24	NA

Drawing (See below and on next page)	Shielded Contact Part No./ Contact Type	Cable Stripping Dim.*** +.0156 –.0000			Amphenol Crimp Tools (Center Contact)			Outer Ferrule Crimping Tool††	Cable Application
		A	B	C	Tool	Nest Bushing	Crimp Setting		
Type 1 #1 Shielded	48-1226-02 Pin 48-1227-02 Socket 48-1227-50 Socket	.2189	.0781	.1094	294-268* 294-289**	294-1631	#3	294-529	#22 AWG per MIL-C-7078 Type II and MIL-C-27500-22 KING RG-174/U, -188/U
							#1	294-529	RG-161/U, -179/U, -179A/U, -187/U
	48-1226-57 Pin 48-1227-57 Socket	.2189	.0781	.1094	294-268* 294-289**	294-1631	#1	294-528	Raychem 9530A11
Type 2 #1 Shielded	48-1226-51, -54 Pin 48-1227-51, -54, -56 Socket	.2189	.0313	.1563	294-268* 294-289**	294-1631	#1	294-528	RG-180/U, -180A/U, -180B/U, -195/U
Type 3 #1 Shielded	48-1226-55 Pin 48-1227-55 Socket	.2344	.0313	.1563	294-268* 294-289**	294-1631	#1	294-529	RG-178/U, -178A/U, -178B/U, -196-U
Type 4 #2 Shielded	48-2187-02 Pin 48-2188-02 Socket	.2189	.1094	.1406	294-126** 294-243** 294-1166**† 294-358** 294-268*	294-1014 Turret Head 294-1014 294-1015 299-1630	.030 -.040	294-528	#18, 20, 22 AWG per MIL-C-7078, Type II and MIL-C-27500-18, -20, -22 KING Extruded Jacket
	48-2187-50, -51 Pin 48-2188-50, -51, -53, -54 Socket	.2189	.1094	.1406	294-1166**† 294-358** 294-268*	294-1014 294-1015 294-1630	.030 .040 #3	294-528	RG-180/U, -180A/U, -180B/U, -195/U
Type 5 #2 Shielded	48-2187-52 Pin 48-2188-52 Socket	.3125	.1094	.1406	294-358** 294-268*	294-1015 294-1630	.037 -.041	294-530	RG-59/U and 21-541

* Conforms to MIL-C-22520/2 specification.
** MS3191 tools are inactive for new procurement, but can be used if available.
*** Refer to illustration on page 228.

† Same as 294-126, less positioners.
†† Including Hex Die Set

Shielded Contact Assembly Procedure

Type 1

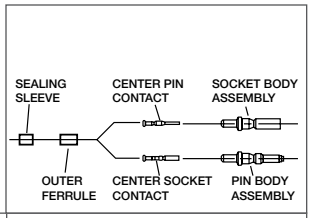

Step 1	Slide sealing boot or sleeve and outer ferrule onto cable and strip cable as shown at right. After stripping, slide spacer over center conductor as shown for ***Type 2*** and ***Type 3***. For ***Type 3*** slide spacer under wire braid.	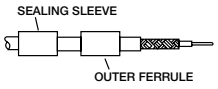
Step 2	Insert stripped center conductor into contact until wire shows through inspection hole and dielectric ***(Type 1, Type 4 and Type 5)*** or spacer ***(Type 2 and Type 3)*** butts against contact. Fully seat contact in nest bushing of crimp tool and crimp in one full stroke. (Follow same crimping procedures except use nest bushing crimping tool from table above).	
Step 3	Slightly flair out ends of wire braid to facilitate insertion of inner ferrule of body assembly. Do not comb braid.	
Step 4	Install center contact in body assembly and slide inner ferrule underneath wire braid as shown. Push center contact until it is locked in place in the body assembly. Pull lightly on cable to make sure that contact is securely locked in place.	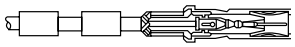
Step 5	Slide outer ferrule over braid and up against body as shown. There should be no slack in the wire braid. Crimp the outer ferrule with proper tool from table above. Then for ***Type 1, Type 3 and Type 5*** slide sealing sleeve toward contact until sleeve touches outer ferrule.	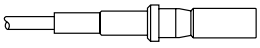
Step 6	Insert the assembled shielded contact into the connector in the same way as the standard contact using applicable insertion tool (see page 28). This completes assembly for ***Type 1, Type 2, Type 3 and Type 5.***	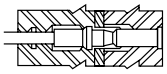
Step 7	To complete assembly for ***Type 4***, push sealing boot into connector grommet until O-ring riser of boot snaps into place and seals the assembly.	

Cable Stripping

Strip cable jacket, braid and dielectric to the dimensions shown in the table on page 227. Make all cuts square and sharp, being careful not to nick braid, dielectric, or center conductor when cutting. If conductor ends fray, twist them to their normal lay.

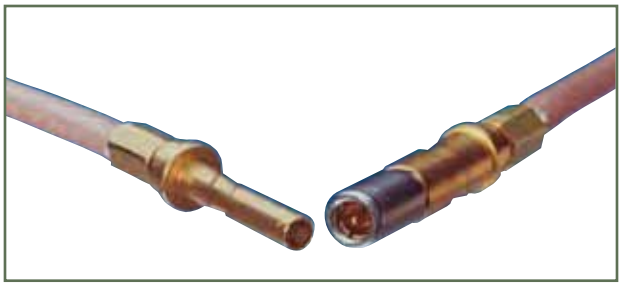

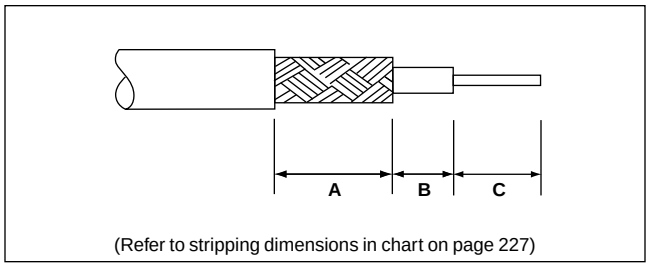

(Refer to stripping dimensions in chart on page 227)

Shielded Contacts after Crimping

Shielded Contact Assembly Procedure, cont.

Type 2	Type 3	Type 4	Type 5
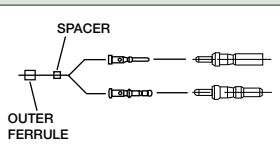	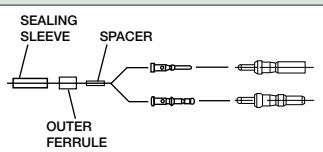	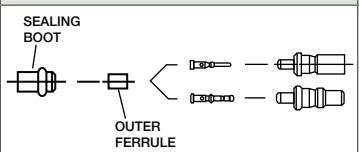	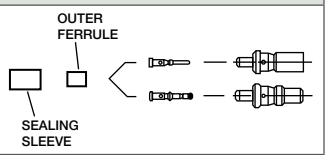
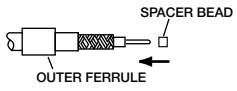	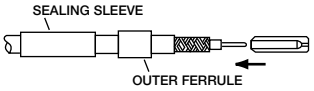	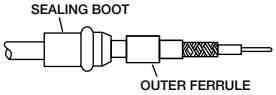	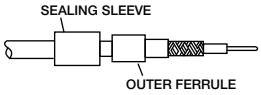
	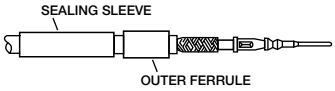	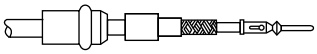	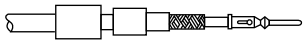
	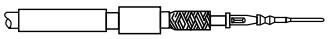	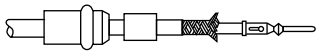	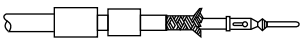
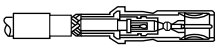	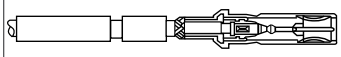	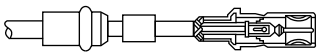	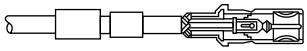
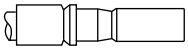	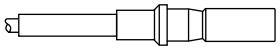	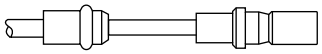	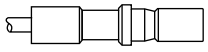
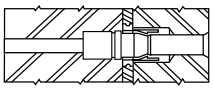	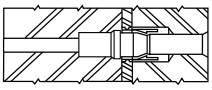	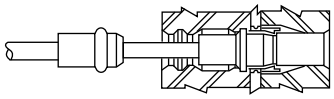	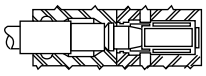
		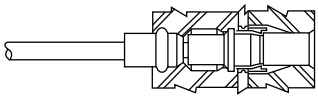	

Amphenol Aerospace

Contact Termination

Contacts should be crimped to the wire with MS Standard hand crimping tools or specification automatic crimping machines.

When stripping the wire avoid nicking wires or damaging the insulation as it is a functional part of the sealing system.

Contact Size	Wire Size	Stripping Length
20	20 to 24	.170" – .201"
16	16 to 18	.207" – .238"
12	12 to 14	.207" – .238"

Follow steps 1 – 4, as shown below, for proper contact crimping:

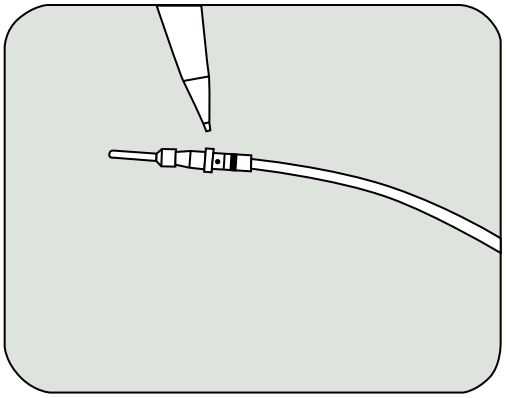

1. Insert stripped wire into contact pocket until it is visible through inspection hole.

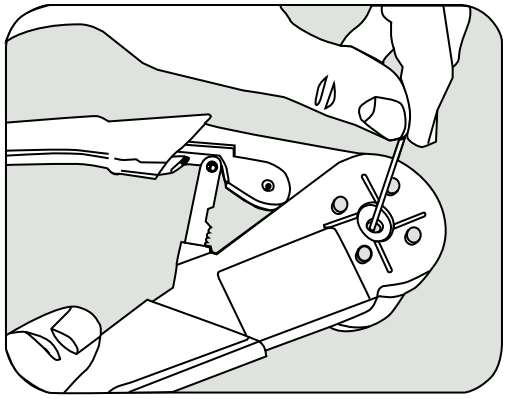

2. Carefully seat contact in crimp tool positioner.

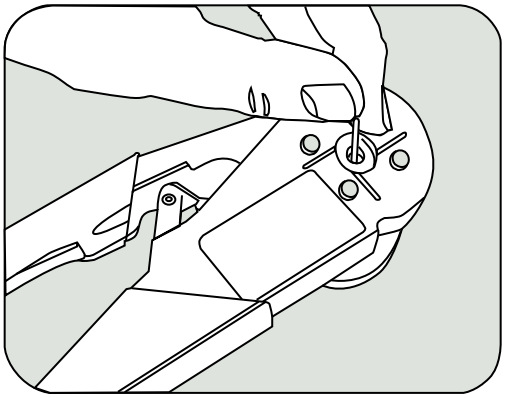

3. Crimp in one full stroke. (The ratchet will not release jaws until tool has completed stroke).

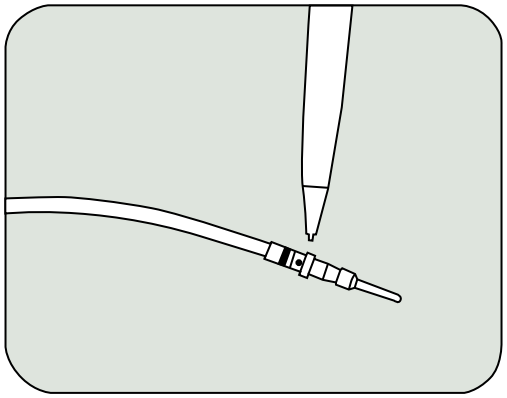

4. Inspect crimp for wire visibility through inspection hole.

Contact Insertion into the Connector

The following steps are recommended for assembly.

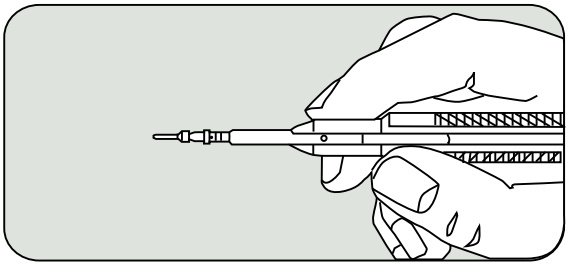

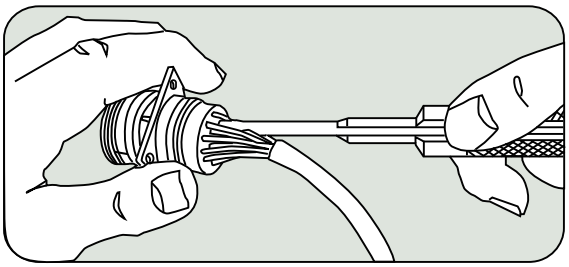

NOTE:
The Pyle Miniature Connector is designed with a unique sealing principle. Assembly of contacts into the connector must be made with reasonable care to avoid damage to the silicone rubber insert.

1. Lubricate wire cavities in back face of insert with a very thin film of DC-200 Silicone Oil or equal before inserting contacts.
2. Locate contact in insertion tool (as shown in illustration).
3. Align contact with hole in rear face of insert. The alignment of insertion tool with contact must be coaxial with the axis of the connector. When contact has entered rear seal portion of insert, maintain alignment of contact and tool parallel to, and in line with hole. Insert contact to full depth. Seating of the contact in the retention collet is audible. The contact insertion force is less than five pounds.
4. Extract insertion tool, keeping it aligned with hole.

Contact Removal from the Connector

A contact is removed from the connector insert with the extraction tool as follows:

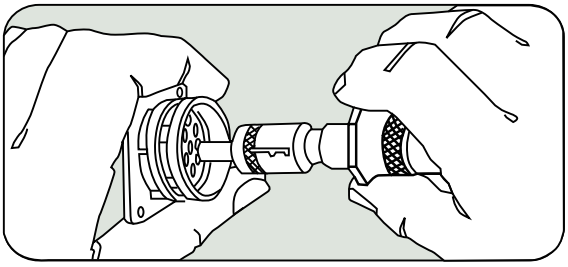

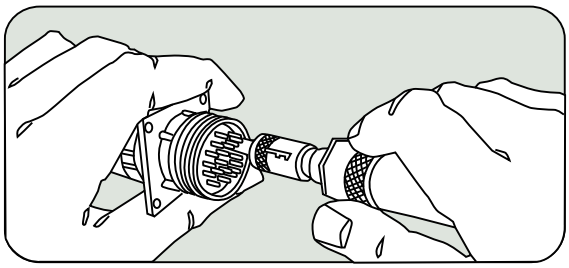

1. Set the spacer sleeve in the proper position for removal of male or female contact.
2. Place tool over the contact and insert into front face of cavity. The alignment of removal tool with contact must be coaxial with axis of connector.
3. Exert a nominal force axially (from 5 to 10 lbs.) to release retention collet. Spacer sleeve will shoulder at front face of insulation when tool is inserted to proper depth.
4. Push extraction plunger to force the contact out of the rear of the insert.
5. Grasp contact or wire at rear face of insert and complete the extraction.
6. Remove extraction tool axially.
7. After using extraction tool the spacer sleeve should be set forward in last notch to protect the end of the plunger guide.

Panel Mounting

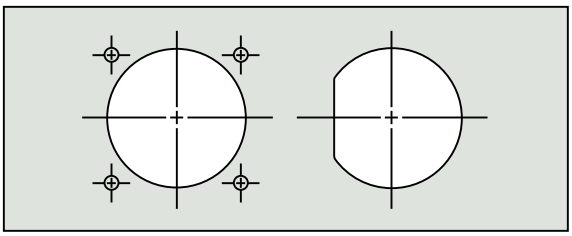

Two receptacle shell styles, flange mount and D-hole mount, are available for panel mounting. See the applicable drawings for mounting hole dimensions. The square flange receptacle, sizes 10 through 22, is fastened to the panel with four size #4-40 machine screws. The 24 and 28 size shells are fastened with #6-32 machine screws.

Contact Insertion Tools

Contact Size	Insertion Tool			Insertion Tool Replacement Tip & Pin	
	Amphenol/ Pyle No.	Mil. No.	Color Code	Amphenol/ Pyle No.	Mil. No.
20	ZZL-R-9510-A-20	MIL-I-81969/17-9	Red	ZZL-R-9531-A-20	–
16	ZZL-R-9510-16	MIL-I-81969/17-4	Blue	ZZL-R-9531-16	–
12	ZZL-R-9510-12	MIL-I-81969/17-5	Yellow	ZZL-R-9531-12	–

Contact Removal Tools

Contact Size	Removal Tool			Removal Tool Replacement Tip	
	Amphenol/ Pyle No.	Mil. No.	Color Code	Amphenol/ Pyle No.	Mil. No.
20	ZZL-R-9511-20	MS-24256-R-20	Red	ZZL-R-9557-20	–
16	ZZL-R-9511-16	MS-24256-R-16	Blue	ZZL-R-9557-16	–
12	ZZL-R-9511-12	MS-24256-R-12	Yellow	ZZL-R-9557-12	–

Contact Crimping Tools

Contact Size	Crimping Tool with Indenters		Adjustable Turret		Checking Gage for Crimping Tool	
	Amphenol/ Pyle No.	Mil. No.	Amphenol/ Pyle No.	Mil. No.	Amphenol/ Pyle No.	Mil. No.
20	TP-201354	M22520/1-01 (Class 1)	TP-201355	M22520/1-02 (Class 1)	TP-201356	M22520/3
16						
12						

Contact Termination

Use table below to determine correct wire stripping length for your wire sizes. When stripping the wire, avoid nicking wires or damaging insulation, as it is a functional part of the sealing system.

Contact Size	Wire Size	Stripping Length
20	20 to 24	.170" – .201"
16	16 to 18	.207" – .238"
12	12 to 14	.207" – .238"

See pages 229 and 300 for assembly instructions for proper contact termination and contact insertion/removal.

Crimping Tools for Shielded Contacts

Amphenol Tool 357-100

Amphenol Tool 294-529 or 294-528

Shielded Contact Size	For Crimping Center Contact		For Crimping Outer Ferrule	
	Basic Crimp Tool	Contact Positioner	Basic Crimp Tool (Hex dies included)	Hex Dimension
# 1 Shielded	357-100	294-1631	294-529	.128 Hex
# 2 Shielded		294-1630	294-528	.160 Hex

Contact Insertion Tools

Contact Size	Amphenol Part No.	Military Part No.
20	294-88	MS2456A20
16	294-96	MS2456A16
#12, # 1 Shielded	294-72	MS24256R12
#2 Shielded	294-128	–

Contact Removal Tools

Contact Size	Amphenol Part No.	Military Part No.
20	294-89	MS2456R20
16	294-97	MS2456R16
#12, # 1 Shielded	294-73	MS2456R12
#2 Shielded	294-127	–

For more information on other tools available consult Amphenol, Sidney, NY. NOTE: Amphenol and Pyle tools are interchangeable.

Standard Crimping Tool for Power Contacts

Basic Crimp Tool		Use with Turret Head
Amphenol Part No.	Military Part No.	
294-542	M22520/1-01	M22520/1-02

Contact Size	Color Code	Wire Size
20	Red	20–22–24
16	Blue	16–18–20
12	Yellow	12–14

Cable Supports - Aluminum

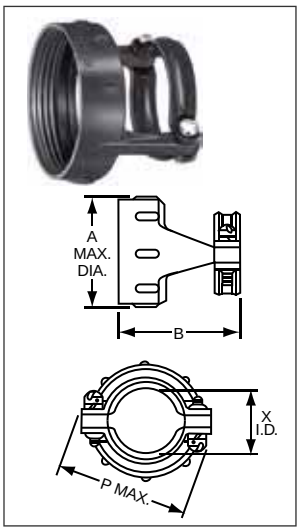

Cable clamps support cable or wire at the plug or receptacle and prevent twisting and pulling.

Shell Size	Non-Conductive, Black Anodize Finish		Conductive, Chromium Finish		A Max. Dia.	B ±.015	X I.D. ±.38	Thread UNEF-2B	P Max.
	MS. No.	Amphenol/Pyle No.	MS No.	Amphenol/Pyle No.					
08	*MS27291-13	*ZZL-R-5308-A	*MS27291-701	*ZZL-M-5308	.582	.935	.180	.4375-28	.785
10	*MS27291-1	*ZZL-R-5310-A	*MS27291-101	*ZZL-M-5310	.731	.935	.270	.5625-24	.914
12	MS27291-2	ZZL-R-5312-A	*MS27291-201	*ZZL-M-5312	.919	.935	.400	.7500-20	1.026
14	MS27291-3	ZZL-R-5314-A	*MS27291-301	*ZZL-M-5314	.981	1.170	.460	.8125-20	1.090
16	MS27291-4	ZZL-R-5316-A	MS27291-401	10-804941-16E	1.106	1.170	.610	.9375-20	1.250
18	*MS27291-5	*ZZL-R-5318-A	*MS27291-501	*ZZL-M-5318	1.231	1.170	.690	1.0625-18	1.358
20	*MS27291-14	*ZZL-R-5320-A	*MS27291-801	*ZZL-M-5320	1.356	1.170	.830	1.1875-18	1.496
22	*MS27291-6	*ZZL-R-5322-A	*MS27291-601	*ZZL-M-5322	1.481	1.170	.940	1.3125-18	1.604
24	MS27291-15	ZZL-R-5324-A	*MS27291-901	*ZZL-M-5324	1.606	1.170	1.040	1.4375-18	1.740

Cable Supports - Stainless Steel, Straight

Shell Size	Standard Straight Support (L = .781)						Long Straight Support				
	MS No.	Amphenol/ Pyle No.	A Dia.	MS No.	Amphenol/ Pyle No.	A Dia.	Similar to MS No.	Amphenol/ Pyle No.	A Dia.	L Max Overall Length	Thread
10	NA	NA	NA	NA	NA	NA	NA	*FPL-R-5310L	NA	NA	.563-36
12	NA	NA	NA	NA	NA	NA	MS27658-12	FPL-R-5312L	.435	1.070	.753-36
14	MS27657-14	ZZL-R-5314	.230	MS27657-1	FPL-R-5314	.382	MS27658-14	FPL-R-5314L	.504	1.170	.803-36
16	*MS27657-16	*ZZL-R-5316	.292	*MS27657-2	*FPL-R-5316	.462	MS27658-16	FPL-R-5316L	.686	1.270	.930-36
18	MS27657-18	ZZL-R-5318	.392	MS27657-3	FPL-R-5318	.556	*MS27658-18	*FPL-R-5318L	.794	1.370	1.036-36
20	NA	NA	NA	NA	NA	NA	NA	*FPL-R-5320L	NA	NA	NA
22	MS27657-22	ZZL-R-5322	.516	MS27657-4	FPL-R-5322	.608	MS27658-22	FPL-R-5322L	1.038	1.570	1.286-36
24	NA	NA	NA	NA	NA	NA	MS27658-24	FPL-R-5324L	1.162	1.670	1.411-36
28	NA	NA	NA	NA	NA	NA	MS27658-28	FPL-R-5328L	1.412	1.870	1.661-36

Cable Supports - Stainless Steel, Right Angle

Shell Size	Cable Support, Right Angle				
	Similar to MS No.	Amphenol/Pyle No.	A Dia.	L Max Overall Length	Thread
10	NA	*FPL-R-5210	NA	NA	.563-36
12	MS27659-12	FPL-R-5212	.435	1.298	.753-36
14	MS27659-14	FPL-R-5214	.504	1.388	.803-36
16	*MS27659-16	*FPL-R-5216	.686	1.523	.930-36
18	MS27659-18	FPL-R-5218	.794	1.622	1.036-36
22	MS27659-22	FPL-R-5222	1.038	1.878	1.286-36
24	*MS27659-24	*FPL-R-5224	1.162	2.000	1.411-36
28	*MS27659-28	*FPL-R-5228	1.412	2.250	1.661-36

*Consult Amphenol, Sidney, NY for availability

Additional right angle conduit adapters and cable support clamps are available which provide added protection for the cable or wiring. Closed back cable support clamps have a removable cover; while open back cable support clamps have a strap to protect the wires at the right angle bend.

Cable Supports - Stainless Steel, Closed Right Angle

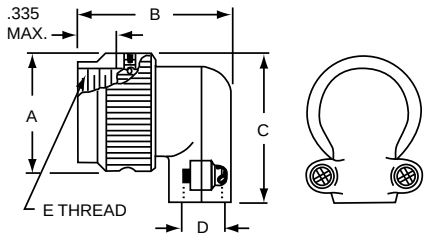

Shell Size	Cable Support - Closed Right Angle						
	MS No.	Amphenol No.	A Dia. Max.	B Max.	C Max	D Max	E Thread UNEF-2B
8	MS27558-1	48-2222-08100	.672	1.200	.938	.245	.4375-28
10	MS27558-2	48-2222-10100	.797	1.320	1.049	.370	.5625-24
12	MS27558-3	48-2222-12100	1.016	1.320	1.248	.370	.7500-20
14	MS27558-4	48-2222-14100	1.110	1.487	1.330	.520	.8125-20
16	MS27558-5	48-2222-16100	1.234	1.470	1.447	.520	.9375-20
18	MS27558-6	48-2222-18100	1.360	1.588	1.577	.645	1.0625-18
20	MS27558-7	48-2222-20100	1.485	1.759	1.698	.780	1.1875-18
22	MS27558-8	48-2222-22100	1.610	1.759	1.820	.780	1.3125-18
24	MS27558-9	48-2222-24100	1.735	2.027	1.945	1.065	1.4375-18

Cable Supports - Stainless Steel, Open Right Angle

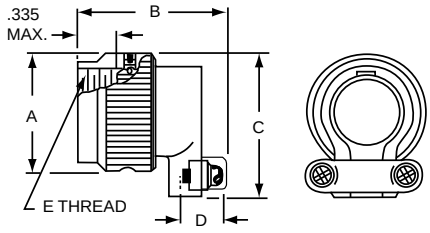

Shell Size	Cable Support - Open Right Angle						
	MS No.	Amphenol No.	A Dia. Max.	B Max.	C Max	D Max	E Thread UNEF-2B
8	MS27559-1	48-2222-08200	.672	1.173	.938	.201	.4375-28
10	MS27559-2	48-2222-10200	.797	1.293	1.049	.328	.5625-24
12	MS27559-3	48-2222-12200	1.016	1.293	1.248	.328	.7500-20
14	MS27559-4	48-2222-14200	1.110	1.460	1.330	.452	.8125-20
16	MS27559-5	48-2222-16200	1.234	1.443	1.447	.508	.9375-20
18	MS27559-6	48-2222-18200	1.360	1.561	1.577	.571	1.0625-18
20	MS27559-7	48-2222-20200	1.485	1.732	1.698	.748	1.1875-18
22	MS27559-8	48-2222-22200	1.610	1.732	1.819	.748	1.3125-18
24	MS27559-9	48-2222-24200	1.735	2.000	1.945	.996	1.4375-18

Conduit Adapter- Stainless Steel, Right Angle

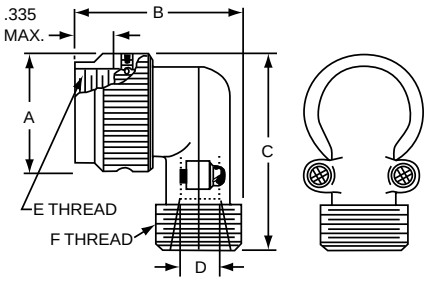

Shell Size	Conduit Adapter - Right Angle							
	Equivalent MS No.	Amphenol No.	A Dia. Max.	B Max.	C Max	D Max	E Thread UNEF-2B	F Thread UNEF-2A
8	MS27557-1	48-2222-08000	.672	1.300	1.403	.245	.4375-28	.6250-24
10	MS27557-2	48-2222-10000	.797	1.420	1.514	.370	.5625-24	.7500-20
12	MS27557-3	48-2222-12000	1.016	1.420	1.713	.370	.7500-20	.7500-20
14	MS27557-4	48-2222-14000	1.110	1.575	1.795	.520	.8125-20	.8750-20
16	MS27557-5	48-2222-16000	1.234	1.558	1.912	.520	.9375-20	.8750-20
18	MS27557-6	48-2222-18000	1.360	1.675	2.042	.645	1.0625-18	1.0000-20
20	MS27557-7	48-2222-20000	1.485	1.863	2.163	.780	1.1875-18	1.1875-18
22	MS27557-8	48-2222-22000	1.610	1.863	2.285	.780	1.3125-18	1.1875-18
24	MS27557-9	48-2222-24000	1.735	2.118	2.410	1.065	1.4375-18	1.4375-18

Amphenol Aerospace

Dummy Receptacles - Aluminum Threaded or Bayonet

Used as an anchoring place for disconnected plugs, dummy receptacles eliminate the problems involved in letting plugs swing freely. They also provide a limited air seal and prevent accumulation of foreign material on the face of the plug. Order by part numbers in chart below.

Threaded Style pictured

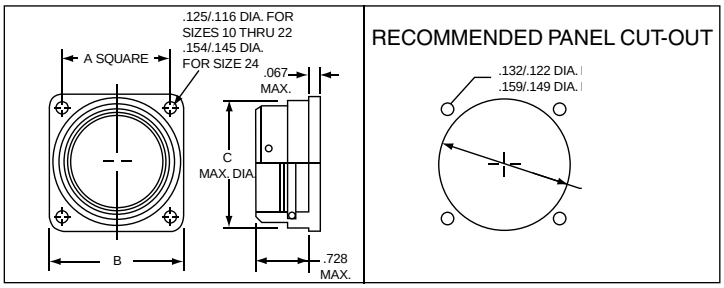

Size	Dimensional Data					How to Order			
						Bayonet		Threaded	
	Thread Size UNEF-2A	A Square ±.005	B ±.005	C Max. Dia.	D Min. Dia.	Amphenol Part No.	Equivalent MS Part No.	Amphenol Part No.	Equivalent MS Part No.
10	.6875-24	.719	.937	.696	.748	48-149-10000	MS27297-1	48-172-10000	MS27296-1
12	.8750-20	.812	1.031	.875	.913	48-149-12000	MS27297-2	48-172-12000	MS27296-2
14	.9375-20	.906	1.125	.935	.980	48-149-14000	MS27297-3	48-172-14000	MS27296-3
16	1.0625-18	.969	1.250	1.062	1.107	48-149-16000	MS27297-4	48-172-16008	MS27296-4
18	1.1875-18	1.062	1.343	1.187	1.209	48-149-18000	MS27297-5	48-172-18000	MS27296-5
20	1.3125-18	1.156	1.437	1.312	1.337	48-149-20000	MS27297-8	48-172-20000	MS27296-8
22	1.4375-18	1.250	1.562	1.437	1.452	48-149-22000	MS27297-6	48-172-22000	MS27296-6
24	1.5625-18	1.375	1.703	1.562	1.577	48-149-24000	MS27297-9	48-172-24000	MS27296-9

Protection Caps and Chains - Threaded or Bayonet

Protective metal caps provide an environmental seal for the connector face. They exclude dirt, dust, moisture and other foreign materials from the face of unmated plugs and receptacles. The caps have a woven steel strap so they can be easily attached

Size	Dimensional Data					
	A Max. Dia.	B ±.250 Chain Length	Bayonet Cap		Threaded Cap	
			Plug	Receptacle	Plug	Receptacle
			C +.000 −.005	C[1] +.005 −.000	C Thread UNEF-2A	C[1] Thread UNEF-2B
10	.906	3.00	.659	.662	.6875-24	.6875-24
12	1.078	3.00	.829	.832	.8750-20	.8750-20
14	1.141	5.00	.898	.901	.9375-20	.9375-20
16	1.266	5.00	1.025	1.028	1.0625-18	1.0625-18
18	1.375	5.00	1.131	1.134	1.1875-18	1.1875-18
20	1.510	5.00	1.256	1.263	1.3125-18	1.3125-18
22	1.625	5.00	1.381	1.384	1.4375-18	1.4375-18
24	1.760	5.00	1.506	1.511	1.5625-18	1.5625-18

BAYONET

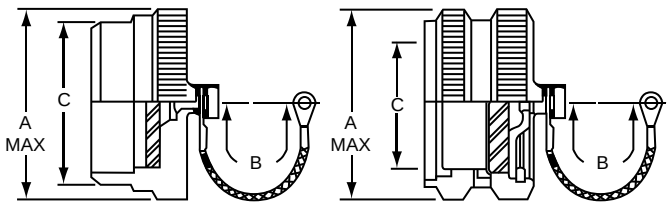

Plug Cap **Receptacle Cap**

THREADED

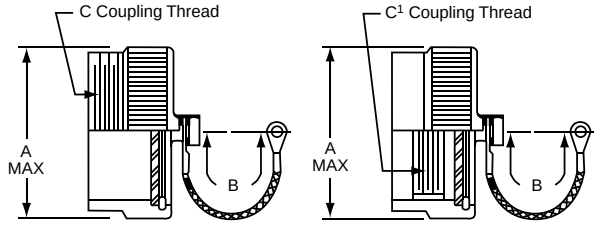

Plug Cap **Receptacle Cap**

Size	How to Order Bayonet Cap & Chain			
	Plug		Receptacle	
	Amphenol Part No.	Equivalent MS Part No.	Amphenol Part No.	Equivalent MS Part No.
10	48-2144	MS27293-1	48-2150	MS27295-1
12	48-2143	MS27293-2	48-2149	MS27295-2
14	48-2142	MS27293-3	48-2148	MS27295-3
16	48-2141	MS27293-4	48-2147	MS27295-4
18	48-2140	MS27293-5	48-2146	MS27295-5
20	48-2773	MS27293-8	48-2774	MS27295-8
22	48-2139	MS27293-6	48-2145	MS27295-6
24	48-2767	MS27293-9	48-2768	MS27295-9

Size	How to Order Threaded Cap & Chain			
	Plug		Receptacle	
	Amphenol Part No.	Equivalent MS Part No.	Amphenol Part No.	Equivalent MS Part No.
10	48-2340-10	MS27292-1	48-2301-10	MS27294-1
12	48-2340-12	MS27292-2	48-2301-12	MS27294-2
14	48-2340-14	MS27292-3	48-2301-14	MS27294-3
16	48-2340-16	MS27292-4	48-2301-16	MS27294-4
18	48-2340-18	MS27292-5	48-2301-18	MS27294-5
20	48-2340-20	MS27292-8	48-2301-20	MS27294-8
22	48-2340-22	MS27292-6	48-2301-22	MS27294-6
24	48-2340-24	MS27292-9	48-2301-24	MS27294-9

Amphenol
Circular Connectors for Printed Circuit Board Applications

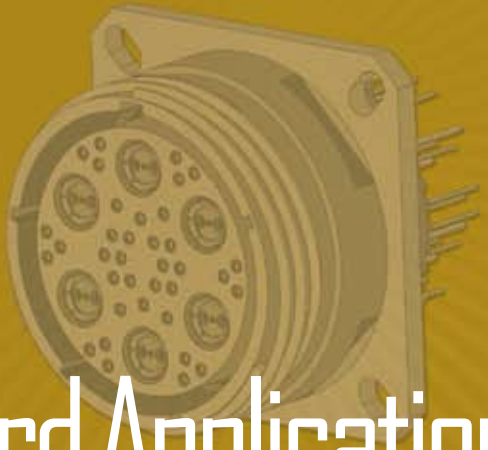

PCB Contacts

TABLE OF CONTENTS

Circular Connectors for Printed Circuit Board Applications

- Table of Contents 236
- Introduction and Guide to Selecting a PCB Circular Connector . 237, 238
- Circular Connectors with PCB Contacts Insert Availability 239
- Alternate Positioning for MIL-DTL-38999 Connectors. 240
- Circular Connectors – PCB Contacts Insert Arrangements . . 241-255

Shell Styles with PCB Contacts:

- MIL-DTL-38999 TV, Series III Shell Styles, Including Hermetic . 256-263
- MIL-DTL-38999 JT, Series II Shell Styles, Including Hermetic . 264-268
- MIL-DTL-38999 LJT, Series I Shell Styles, Including Hermetic . 269-275
- Stand-off Adapter for use with MIL-DTL-38999 PCB Connectors . . 276

PCB Connector Typical Markets:

- Military and Commercial Aviation
- Space & Satellites
- Military Vehicles
- Shipboard
- Instrumentation

Amphenol Aerospace

Amphenol® Circular Connectors for Printed Circuit Board Applications

Amphenol Aerospace

Amphenol provides circular connectors with PC Tail contacts. This catalog section features the 38999 Series III, II, and 1 connectors which are ideal for printed circuit boards applications, either with rigid attachment or with flex print assembly attachment. For information on other amphenol circular connector with PC Tail contacts consult Amphenol, Sidney NY.

MIL-DTL-38999 CONNECTORS, METAL & COMPOSITE

- Lightweight, compact, high density and high reliability cylindrical
- Operating voltage to 900 VAC (RMS) at sea level
- Environmentally resistant
- Solder or crimp rear release contacts in mating plug
- Series I (LJT) - Bayonet coupling
  - Scoop-proof (recessed pins) offers maximum contact protection
- Series II (JT) - Bayonet coupling
  - For applications requiring maximum weight/space savings and reliability
- Series III (Tri-Start) - Threaded, quick coupling in one complete turn
  - Designed for general duty as well as severe environmental applications
  - Superior EMI shielding with grounding fingers and metal-to-metal mating
  - Filter/Transient protection versions available
  - Scoop-proof contact protection
  - Stainless steel firewall versions, and composite versions
  - Available in Hermetics

See MIL-DTL-38999 Series I, II, and III sections of this catalog for more detailed information.
Note: MIL-DTL-38999 supersedes MIL-C-38999.

38999 Series III Box Mount Connector with PC Tails

Special 38999 Connector with Stand-off Shell and PC Tails

38999 Series III Connector with a Special Configuration Composite Shell and PC Tails

How to Measure the PCB Tail Length

The tail length of the PCB is the portion of the contact that extends beyond the rear of the shell. This length will vary in relationship to the mounting flange, depending on the series of connector selected. Standard lengths are shown on the connector shell style drawings in this catalog. These shell style drawing pages also provide how to order part numbering for standard PCB cylindrical connectors. When computing the desired tail length, it is important to take into consideration the following factors:

- The connector series and shell style.
- The mounting style of the receptacle; jam nut (D hole) or panel mount (four holes). This can affect the overall length of the tail.
- The extension of the tail beyond the opposite side of the board or the flex.
- The space required to adequately clean flux from between the board or flex and the rear of the connector shell. Connectors that are mounted flush against the board may trap soldering flux which could lead to corrosion of the solder joints.

Stand-off Adapter on a Jam Nut Receptacle.

Would Alignment Discs, Headers or Special Stand-off Shells be Beneficial?

The answer is yes, any mechanical methods needed to stabilize the board or flex to the connector and/or the panel is beneficial. The PCB tails shown in this catalog are of one diameter. Stepped tails or PCB tails with an increased diameter on a designated portion may be required for certain applications.

Alignment discs are available which provide ease of alignment of pins to boards, protection during shipment and optimized electrical circuit separation. Header assemblies (see pages 106 & 107) are available which provide time and cost saving potentials. Standoffs may be required for certain applications. Amphenol has developed a new stand-off adapter (see page 276) which may eliminate the need for special stand-off shell designs. Connectors with clinch nuts can be provided. Please call Amphenol to discuss any optional designs or any special requirements.

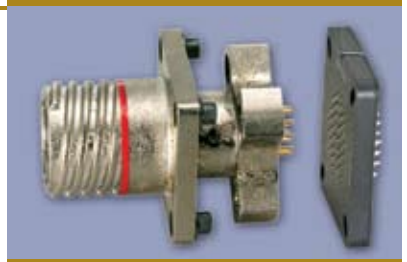

Universal Header Assemblies are available for Flex Print/PC Board Mounting. Beneficial especially when electrical testing of the connector requires it to be removed and reattached.

What Determines the Diameter of the PCB Tail?

The outside diameter of the PCB tail is determined by the inside diameter of the plated through-hole on the board or flex print. The standard or most popular diameters are shown in the chart on the next page and are called out in the connector illustrations in this catalog.

Standard diameters of PCB tails

Connector Series	Size 16 Contact	Size 20 Contact	Size 22D Contact
MIL-DTL-38999	.062 ±.001	.019 ±.001	.019 ±.001

Compliant Pin Contacts in a Bayonet 38999 Catalog

Should PCB Tails be Gold Plated or Pre-tinned?

The standard PCB tails for MIL-DTL-38999 receptacles have gold plating,.00005 inches over nickel. Amphenol can substitute a pre-tinned version of these tails to facilitate the termination process. This pre-tinning is a 60/40 lead-tin alloy. Call Amphenol for further information on pre-tinning and any other plating of contacts not covered in this catalog.

Would Flex Assemblies be Necessary or Beneficial for the Application?

Flex print can radically simplify the assembly of a connector to a system, as well as eliminate wiring errors. Amphenol offers connector flex assemblies through APC, Amphenol Printed Circuits division. Features and benefits of using flex technology include:

- Available for MIL-DTL-38999 (including filter EMI/EMP types), circular connectors
- Sculptures® Flexible Circuits with built-in terminations
- Eliminates failures associated with crimped or solder-on contacts
- Geometrically fit tight space requirements and create a self-locking terminal pad

Should Other PC Tail Contact Types be Considered?

Press-Fit Connectors with compliant pins are available which engage the plated through-holes in the board without the need for soldering. This optional contact style offers the following benefits:

- Improved board processing time
- Excellent temperature performance
- Ideal for low-lead applications

For more information on Press-Fit connectors with compliant pins see page 416.

Special Quadrax contacts have been designed with PC tails. Coax, twinax and triax contacts can also have PC tails. Refer to the High Speed contacts section of this catalog.

Special Design with Longer PC Tails in a 38999 Composite Shell Connector. Also shows an Alignment Disc.

Flex Termination for Attachment to PC Boards

Quadrax PC Tail Contacts Combined with Standard PC Tail Contacts

Quadrax Contacts with PC Tails in a 38999 Connector with Special Stand-off Shell

Amphenol Aerospace

The following table lists the most commonly used insert arrangements for printed circuit board application of MIL-DTL-38999 circular connectors. This represents the most readily available patterns within these series. See illustrations of these selected patterns on the following pages. If you require other arrangements than what are shown here, consult Amphenol for further availability.

Example: Shell Size is the first number (8–3) Insert Arrangement is second number.

MIL-DTL-38999			Service Rating	Total Contacts	Contact Size*		
JT MIL-DTL-38999 Series II	LJT MIL-DTL-38999 Series I	Tri-Start MIL-DTL-38999 Series III			22D	20	16
8-3	9-3		M/I	3		3	
8-35	9-35	9-35	M	6	6		
8-98	9-98	9-98	I	3		3	
10-5	11-5	11-5	I	5		5	
	11-6		I	6		6	
10-35	11-35	11-35	M	13	13		
12-3	13-3		II	3			3
12-35	13-35	13-35	M	22	22		
14-18	15-18	15-18	I	18		18	
14-19	15-19	15-19	I	19		19	
14-35	15-35	15-35	M	37	37		
16-26	17-26	17-26	I	26		26	
16-35	17-35	17-35	M	55	55		
18-11	19-11	19-11	II	11			11
18-32	19-32	19-32	I	32		32	
18-35	19-35	19-35	M	66	66		
20-27	21-27		I	27		27	
20-35	21-35	21-35	M	79	79		
20-41	21-41	21-41	I	41		41	
22-35	23-35	23-35	M	100	100		
22-55	23-55	23-55	I	55		55	
24-31			I	31			31
24-35	25-35	25-35	M	128	128		
24-61	25-61	25-61	I	61		61	

* For information on size 12 PC tail contacts consult Amphenol Aerospace.

Printed Circuit Boards are available in other series like MIL-DTL-26482 and MIL-5015 Connectors. Please contact Amphenol Aerospace for more information.

MIL-DTL-26482

- Medium size, widely used circular
- Operating voltage to 1,000 VAC (RMS) at sea level
- Series 1 (PT) - Bayonet coupling - most commonly used in PCB applications
- Environmentally resistant
- Solder or crimp front and rear release contacts in mating plug

Black/green zinc alloy plating (cadmium-free) available

MIL-5015 Connector

- Medium–heavy weight, time-tested circular
- Operating voltage to 1,500 VAC (RMS) at sea level
- Environmentally resistant or general duty
- Threaded coupling
- Solder or crimp rear insertion contacts in mating plug

Black/green zinc alloy plating (cadmium-free) available

Alternate Positioning for MIL-DTL-38999

To avoid cross-plugging problems in applications requiring the use of more than one connector of the same series, size and arrangement, alternate rotations are available as indicated in the accompanying charts.

In MIL-DTL-38999 Series I, II and III connectors the rotation is based on rotating the master key/keyway in the connector shell.

A plug with a given rotation letter will mate with a receptacle with the same rotation letter. Only the master key/keyway rotates in the shell, and the insert always remains in the same position relative to the minor keys. Refer to diagrams below for each connector series.

LJT (MIL-DTL-38999 Series I) KEY/KEYWAY ROTATION

AB ANGLE OF ROTATION (Degrees)					
Shell Size	Normal°	A°	B°	C°	D°
9	95	77	–	–	113
11	95	81	67	123	109
13	95	75	63	127	115
15	95	74	61	129	116
17	95	77	65	125	113
19	95	77	65	125	113
21	95	77	65	125	113
23	95	80	69	121	110
25	95	80	69	121	110

JT (MIL-DTL-38999 Series II) KEY/KEYWAY ROTATION

AB ANGLE OF ROTATION (Degrees)					
Shell Size	Normal°	A°	B°	C°	D°
8	100	82	–	–	118
10	100	86	72	128	114
12	100	80	68	132	120
14	100	79	66	134	121
16	100	82	70	130	118
18	100	82	70	130	118
20	100	82	70	130	118
22	100	85	74	126	115
24	100	85	74	126	115

Tri-Start (MIL-DTL-38999 Series III) KEY/KEYWAY ROTATION

Shell Size	Key & Keyway Arrangement Identification Letter	AR° BSC	BR° BSC	CR° BSC	DR° BSC
9	N	105	140	215	265
	A	102	132	248	320
	B	80	118	230	312
	C	35	140	205	275
	D	64	155	234	304
	E	91	131	197	240
11, 13, and 15	N	95	141	208	236
	A	113	156	182	292
	B	90	145	195	252
	C	53	156	220	255
	D	119	146	176	298
	E	51	141	184	242
17 and 19	N	80	142	196	293
	A	135	170	200	310
	B	49	169	200	244
	C	66	140	200	257
	D	62	145	180	280
	E	79	153	197	272
21, 23, and 25	N	80	142	196	293
	A	135	170	200	310
	B	49	169	200	244
	C	66	140	200	257
	D	62	145	180	280
	E	79	153	197	272

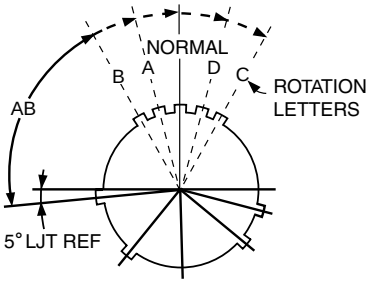

RELATIVE POSSIBLE POSITION OF ROTATED MASTER KEYWAY (front face of LJT connector receptacle shown)

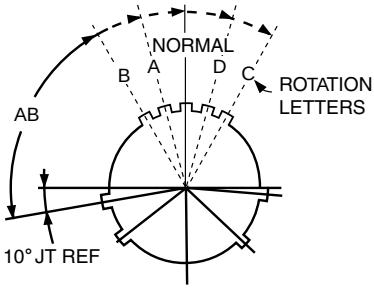

RELATIVE POSSIBLE POSITION OF ROTATED MASTER KEYWAY (front face of JT connector receptacle shown)

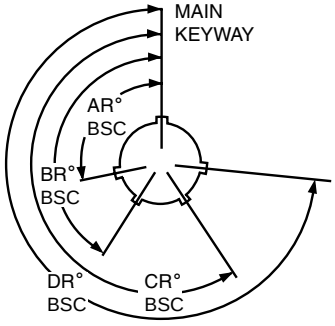

RELATIVE POSSIBLE POSITION OF ROTATED MASTER KEYWAY (front face of Tri-Start connector receptacle shown)

MIL-DTL-38999 SERIES I LJT & SERIES II JT CONNECTORS ALTERNATE ROTATION CROSS REFERENCE LETTERS

Pins in Alternate Rotations	Sockets in Alternate Rotations
PA = E	SA = F
PB = R	SB = T
PC = W	SC = X
PD = Y	SD = Z

Explanation:
Use P at end of part number for pin contacts in Normal position. Use S at end of part number for socket contacts in Normal position. Use cross reference letters given in chart above for alternate rotations.

MIL-DTL-38999 SERIES III, TRI-START CONNECTORS ALTERNATE ROTATION CROSS REFERENCE LETTERS

Pins in Alternate Rotations	Sockets in Alternate Rotations
PA = G	SA = H
PB = I	SB = J
PC = K	SC = L
PD = M	SD = N
PE = R	SE = T

Explanation:
Use P at end of part number for pin contacts in Normal position. Use S at end of part number for socket contacts in Normal position. Use cross reference letters given in chart above for alternate rotations.

Insert Arrangement #8-3 / 9-3

Connector Type:	JT MIL-DTL-38999 Series II	LJT MIL-DTL-38999 Series I	Tri-Start MIL-DTL-38999 Series III
Insert Designation:	8-3	9-3	NA

Number of Contacts	Contact Size	Service Rating
3	20	M

Contact Locations
Front face of pin insert shown

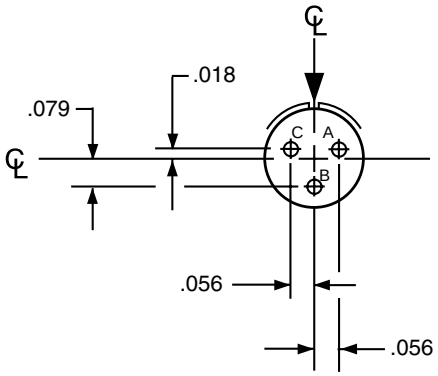

*Service Rating: M for MIL-DTL-38999

Insert Arrangement #8-35 / 9-35

Connector Type:	JT MIL-DTL-38999 Series II	LJT MIL-DTL-38999 Series I	Tri-Start MIL-DTL-38999 Series III
Insert Designation:	8-35	9-35	9-35

Number of Contacts	Contact Size	Service Rating
6	22D	M

Contact Locations
Front face of pin insert shown

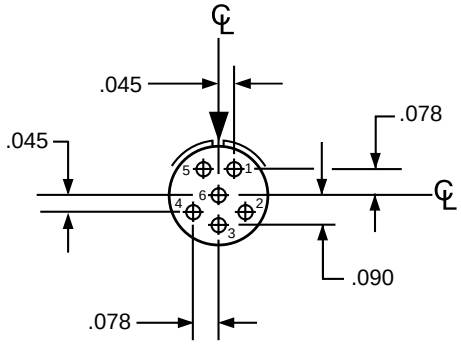

All dimensions for reference only. For alternate rotations see page 240 .
Note: Shown in this catalog are the most common insert patterns for PCB applications. For availability of other arrangements, consult Amphenol Corp., Sidney, NY.

Insert Arrangement #8-98 / 9-98

Connector Type:	JT MIL-DTL-38999 Series II	LJT MIL-DTL-38999 Series I	Tri-Start MIL-DTL-38999 Series III
Insert Designation:	8-98	9-98	9-98

Number of Contacts	Contact Size	Service Rating
3	20	I

Contact Locations
Front face of pin insert shown

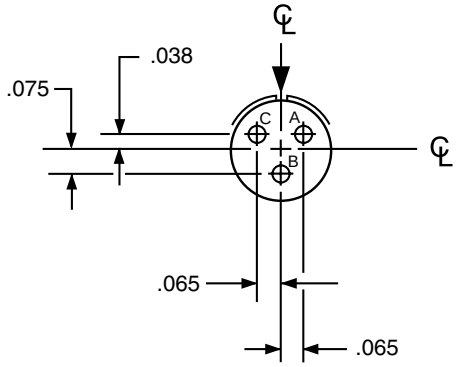

Insert Arrangement #10-5 / 11-5

Connector Type:	JT MIL-DTL-38999 Series II	LJT MIL-DTL-38999 Series I	Tri-Start MIL-DTL-38999 Series III
Insert Designation:	10-5	11-5	11-5

Number of Contacts	Contact Size	Service Rating
5	20	I

Contact Locations
Front face of pin insert shown

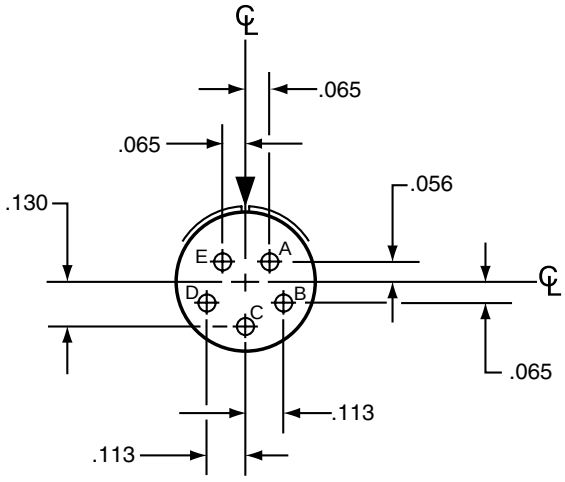

All dimensions for reference only. For alternate rotations see page 240 .
Note: Shown in this catalog are the most common insert patterns for PCB applications. For availability of other arrangements, consult Amphenol Corp., Sidney, NY.

Insert Arrangement #10-6 / 11-6

Connector Type:	JT MIL-DTL-38999 Series II	LJT MIL-DTL-38999 Series I	Tri-Start MIL-DTL-38999 Series III
Insert Designation:	NA	11-6	NA

Number of Contacts	Contact Size	Service Rating
6	20	I

Contact Locations
Front face of pin insert shown

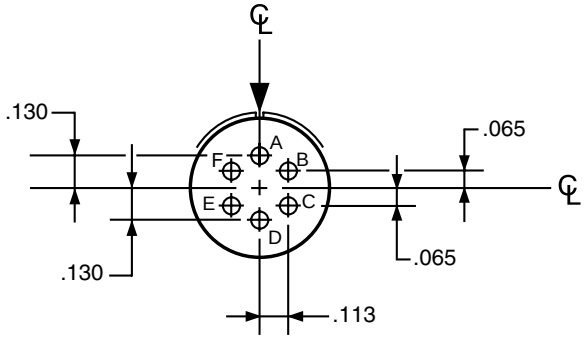

Insert Arrangement #10-35 / 11-35

Connector Type:	JT MIL-DTL-38999 Series II	LJT MIL-DTL-38999 Series I	Tri-Start MIL-DTL-38999 Series III
Insert Designation:	10-35	11-35	11-35

Number of Contacts	Contact Size	Service Rating
13	22D	M

Contact Locations
Front face of pin insert shown

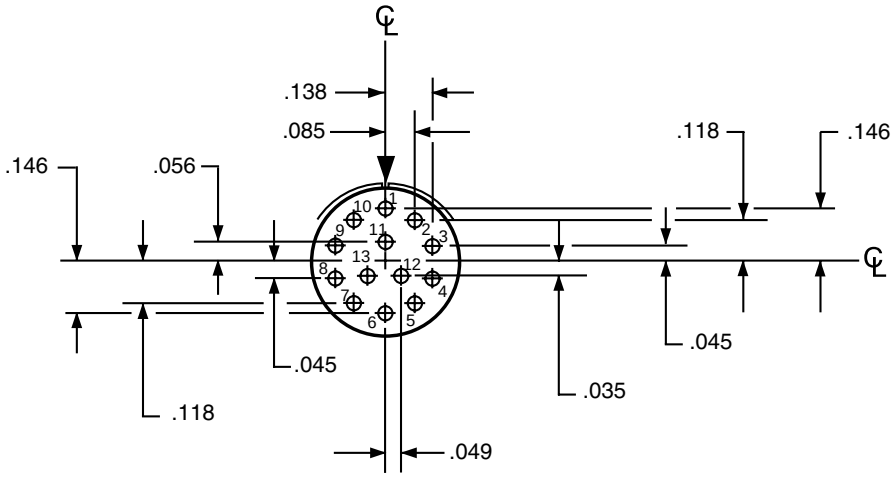

All dimensions for reference only. For alternate rotations see page 240 .
Note: Shown in this catalog are the most common insert patterns for PCB applications. For availability of other arrangements, consult Amphenol Corp., Sidney, NY.

Insert Arrangement #12-3 / 13-3

Connector Type:	JT MIL-DTL-38999 Series II	LJT MIL-DTL-38999 Series I	Tri-Start MIL-DTL-38999 Series III
Insert Designation:	12-3	13-3	NA

Number of Contacts	Contact Size	Service Rating
3	16	II

Contact Locations
Front face of pin insert shown

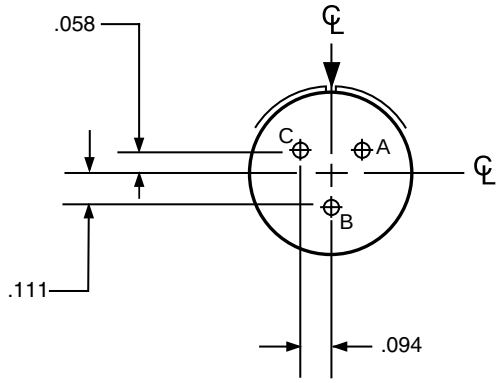

Insert Arrangement #12-35 / 13-35

Connector Type:	JT MIL-DTL-38999 Series II	LJT MIL-DTL-38999 Series I	Tri-Start MIL-DTL-38999 Series III
Insert Designation:	12-35	13-35	13-35

Number of Contacts	Contact Size	Service Rating
22	22D	M

Contact Locations
Front face of pin insert shown

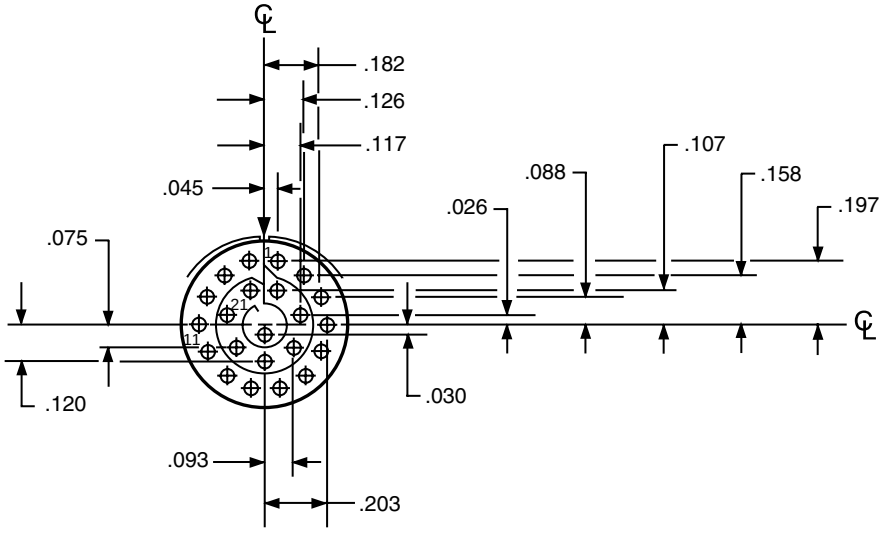

All dimensions for reference only. For alternate rotations see page 240 .
Note: Shown in this catalog are the most common insert patterns for PCB applications. For availability of other arrangements, consult Amphenol Corp., Sidney, NY.

Insert Arrangement #14-18 / 15-18

Connector Type:	JT MIL-DTL-38999 Series II	LJT MIL-DTL-38999 Series I	Tri-Start MIL-DTL-38999 Series III	Number of Contacts	Contact Size	Service Rating
Insert Designation:	14-18	15-18	15-18	18	20	I

Contact Locations
Front face of pin insert shown

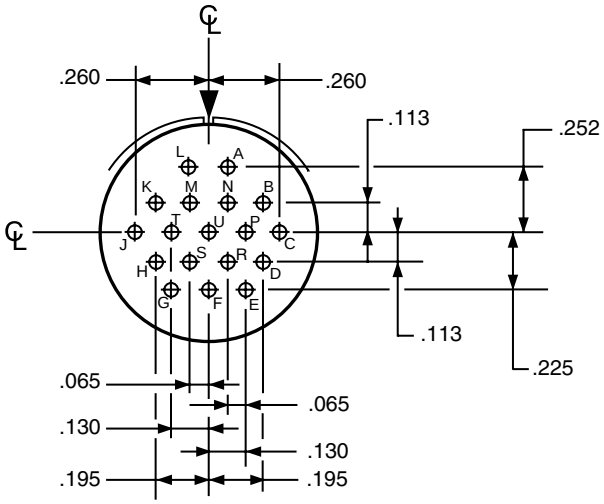

Insert Arrangement #14-19 / 15-19

Connector Type:	JT MIL-DTL-38999 Series II	LJT MIL-DTL-38999 Series I	Tri-Start MIL-DTL-38999 Series III	Number of Contacts	Contact Size	Service Rating
Insert Designation:	14-19	15-19	15-19	19	20	I

Contact Locations
Front face of pin insert shown

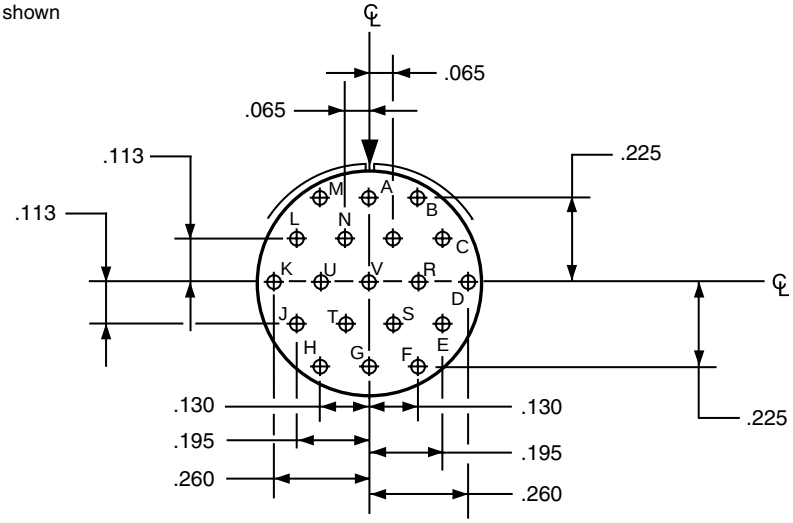

All dimensions for reference only. For alternate rotations see page 240 .
Note: Shown in this catalog are the most common insert patterns for PCB applications. For availability of other arrangements, consult Amphenol Corp., Sidney, NY.

Insert Arrangement #14-35 / 15-35

Connector Type:	JT MIL-DTL-38999 Series II	LJT MIL-DTL-38999 Series I	Tri-Start MIL-DTL-38999 Series III
Insert Designation:	14-35	15-35	15-35

Number of Contacts	Contact Size	Service Rating
37	22D	M

Contact Locations
Front face of pin insert shown

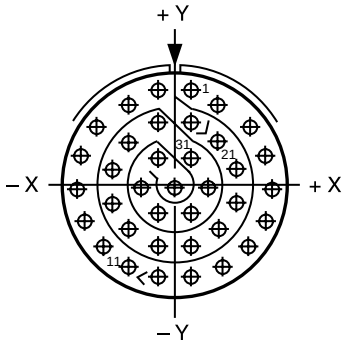

Contact Hole Locations		
Contact Number	Location	
	X Axis	Y Axis
1	+.045	+.262
2	+.123	+.217
3	+.211	+.160
4	+.254	+.080
5	+.266	–.010
6	+.247	–.098
7	+.200	–.175
8	+.130	–.232
9	+.045	–.262
10	–.045	–.262
11	–.130	–.232
12	–.200	–.175
13	–.247	–.098
14	–.266	–.010
15	–.254	+.080
16	–.211	+.160
17	–.123	+.217
18	–.045	+.262
19	+.045	+.172
20	+.123	+.119

Contact Hole Locations		
Contact Number	Location	
	X Axis	Y Axis
21	+.170	+.040
22	+.170	–.050
23	+.123	–.127
24	+.045	–.172
25	–.045	–.172
26	–.123	–.127
27	–.170	–.050
28	–.170	+.040
29	–.123	+.119
30	–.045	+.172
31	+.045	+.074
32	+.090	–.004
33	+.045	–.082
34	–.045	–.082
35	–.090	–.004
36	–.045	+.074
37	.000	–.004

Insert Arrangement #16-26 / 17-26

Connector Type:	JT MIL-DTL-38999 Series II	LJT MIL-DTL-38999 Series I	Tri-Start MIL-DTL-38999 Series III
Insert Designation:	NA	17-26	17-26

Number of Contacts	Contact Size	Service Rating
26	20	I

Contact Locations
Front face of pin insert shown

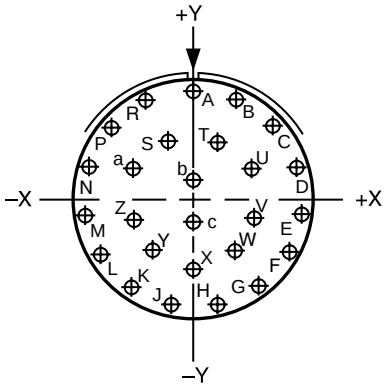

Contact Hole Locations		
Contact Number	Location	
	X Axis	Y Axis
A	.000	+.321
B	+.131	+.293
C	+.239	+.214
D	+.305	+.099
E	+.319	–.034
F	+.278	–.161
G	+.189	–.260
H	+.067	–.314
J	–.067	–.314
K	–.189	–.260
L	–.278	–.161
M	–.319	–.034
N	–.305	+.099
P	–.239	+.214

Contact Hole Locations		
Contact Number	Location	
	X Axis	Y Axis
R	–.131	+.293
S	–.070	+.177
T	+.070	+.177
U	+.175	+.094
V	+.178	–.036
W	+.119	–.151
X	.000	–.203
Y	–.119	–.151
Z	–.178	–.036
a	–.175	+.094
b	.000	+.065
c	.000	–.065

All dimensions for reference only. For alternate rotations see page 240 .
Note: Shown in this catalog are the most common insert patterns for PCB applications. For availability of other arrangements, consult Amphenol Corp., Sidney, NY.

Insert Arrangement #16-35 / 17-35

Connector Type:	JT MIL-DTL-38999 Series II	LJT MIL-DTL-38999 Series I	Tri-Start MIL-DTL-38999 Series III
Insert Designation:	16-35	17-35	17-35

Number of Contacts	Contact Size	Service Rating
55	22D	M

Contact Locations
Front face of pin insert shown

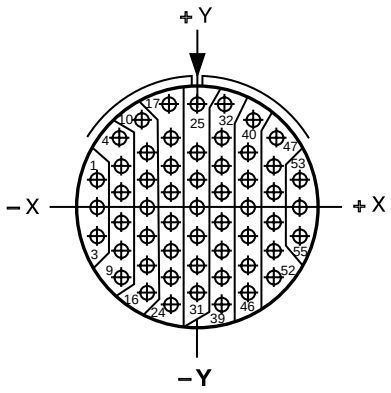

Contact Hole Locations		
Contact Number	Location	
	X Axis	Y Axis
1	–.312	+.086
2	–.312	–.004
3	–.312	–.094
4	–.242	+.221
5	–.234	+.131
6	–.234	+.041
7	–.234	–.049
8	–.234	–.139
9	–.234	–.229
10	–.172	+.279
11	–.156	+.176
12	–.156	+.086
13	–.156	–.004
14	–.156	–.094
15	–.156	–.184
16	–.156	–.274
17	–.089	+.316
18	–.078	+.221
19	–.078	+.131
20	–.078	+.041
21	–.078	–.049
22	–.078	–.139
23	–.078	–.229
24	–.078	–.319
25	.000	+.329
26	.000	+.176
27	.000	+.086
28	.000	–.004
29	.000	–.094
30	.000	–.184

Contact Hole Locations		
Contact Number	Location	
	X Axis	Y Axis
31	.000	–.274
32	+.089	+.316
33	+.078	+.221
34	+.078	+.131
35	+.078	+.041
36	+.078	–.049
37	+.078	–.139
38	+.078	–.229
39	+.078	–.319
40	+.172	+.279
41	+.156	+.176
42	+.156	+.086
43	+.156	–.004
44	+.156	–.094
45	+.156	–.184
46	+.156	–.274
47	+.242	+.221
48	+.234	+.131
49	+.234	+.041
50	+.234	–.049
51	+.234	–.139
52	+.234	–.229
53	+.312	+.086
54	+.312	–.004
55	+.312	–.094

All dimensions for reference only. For alternate rotations see page 240.
Note: Shown in this catalog are the most common insert patterns for PCB applications. For availability of other arrangements, consult Amphenol Corp., Sidney, NY.

Insert Arrangement #18-11 / 19-11

Connector Type:	JT MIL-DTL-38999 Series II	LJT MIL-DTL-38999 Series I	Tri-Start MIL-DTL-38999 Series III
Insert Designation:	18-11	19-11	19-11

Number of Contacts	Contact Size	Service Rating
11	16	II

Contact Locations
Front face of pin insert shown

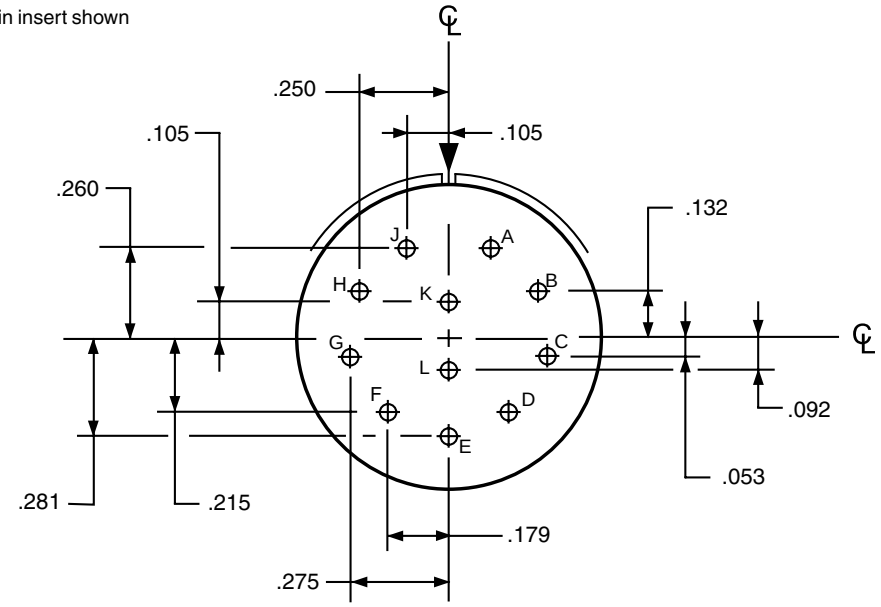

Insert Arrangement #18-32 / 19-32

Connector Type:	JT MIL-DTL-38999 Series II	LJT MIL-DTL-38999 Series I	Tri-Start MIL-DTL-38999 Series III
Insert Designation:	18-32	19-32	19-32

Number of Contacts	Contact Size	Service Rating
32	20	I

Contact Locations
Front face of pin insert shown

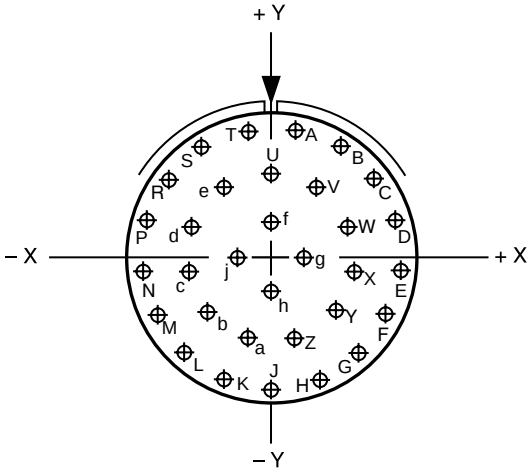

Contact Hole Locations		
Contact Letter	Location	
	X Axis	Y Axis
A	+.066	+.353
B	+.189	+.305
C	+.286	+.217
D	+.345	+.098
E	+.357	–.033
F	+.321	–.160
G	+.242	–.265
H	+.130	–.335
J	.000	–.359
K	–.130	–.335
L	–.242	–.265
M	–.321	–.160
N	–.357	–.033
P	–.345	+.098
R	–.286	+.217
S	–.189	+.305

Contact Hole Locations		
Contact Letter	Location	
	X Axis	Y Axis
T	–.066	+.353
U	.000	+.230
V	+.124	+.193
W	+.209	+.095
X	+.228	–.033
Y	+.174	–.151
Z	+.065	–.221
a	–.065	–.221
b	–.174	–.151
c	–.228	–.033
d	–.209	+.095
e	–.124	+.193
f	.000	+.096
g	+.096	.000
h	.000	–.096
j	–.096	.000

All dimensions for reference only. For alternate rotations see page 240.
Note: Shown in this catalog are the most common insert patterns for PCB applications. For availability of other arrangements, consult Amphenol Corp., Sidney, NY.

Amphenol Aerospace

Insert Arrangement #18-35 / 19-35

Connector Type:	JT MIL-DTL-38999 Series II	LJT MIL-DTL-38999 Series I	Tri-Start MIL-DTL-38999 Series III	Number of Contacts	Contact Size	Service Rating
Insert Designation:	18-35	19-35	19-35	66	22D	M

Contact Locations
Front face of pin insert shown

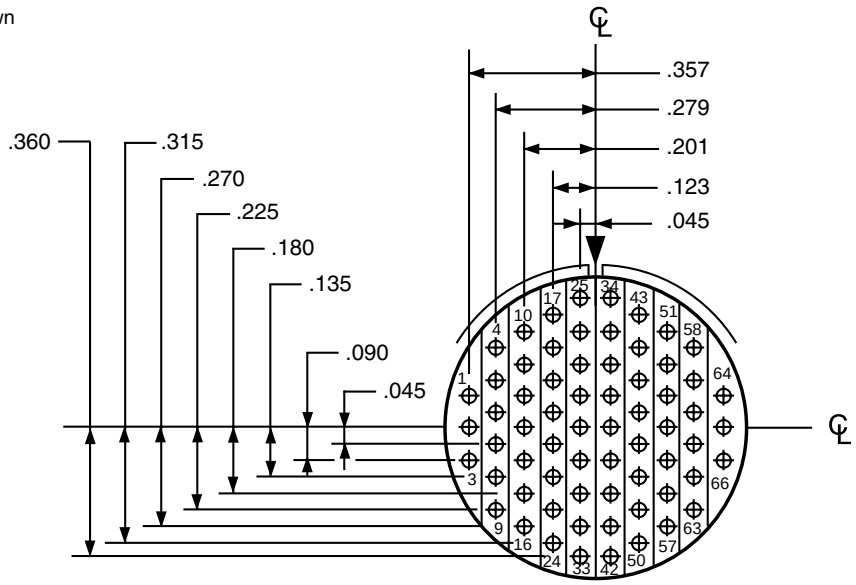

Insert Arrangement #20-27 / 21-27

Connector Type:	JT MIL-DTL-38999 Series II	LJT MIL-DTL-38999 Series I	Tri-Start MIL-DTL-38999 Series III	Number of Contacts	Contact Size	Service Rating
Insert Designation:	20-27	21-27	NA	27	20	I

Contact Locations
Front face of pin insert shown

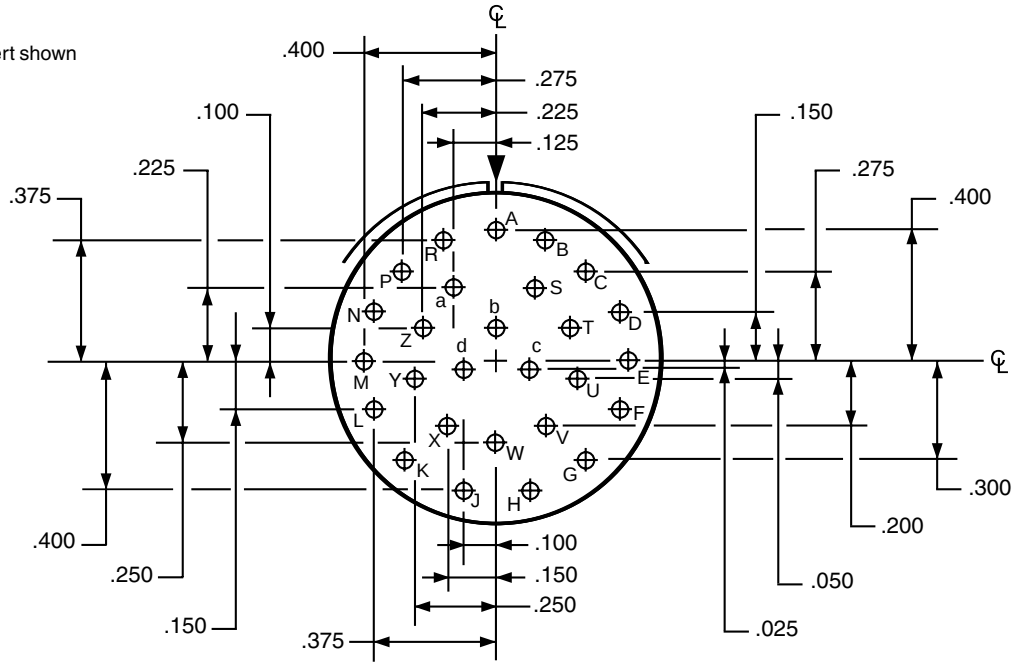

All dimensions for reference only. For alternate rotations see page 240.
Note: Shown in this catalog are the most common insert patterns for PCB applications. For availability of other arrangements, consult Amphenol Corp., Sidney, NY.

Insert Arrangement #20-35 / 21-35

Connector Type:	JT MIL-DTL-38999 Series II	LJT MIL-DTL-38999 Series I	Tri-Start MIL-DTL-38999 Series III
Insert Designation:	20-35	21-35	21-35

Number of Contacts	Contact Size	Service Rating
79	22D	M

Contact Locations
Front face of pin insert shown

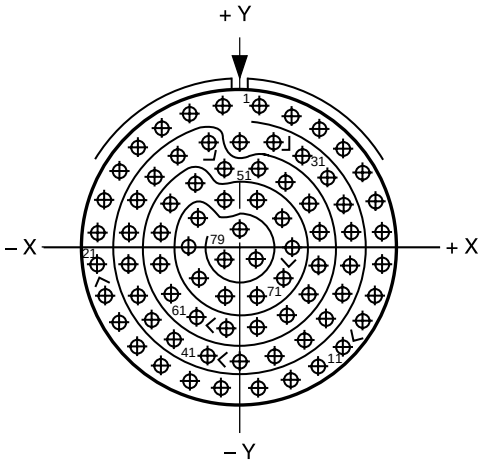

Contact Hole Locations		
Contact Number	Location	
	X Axis	Y Axis
1	+.053	+.426
2	+.146	+.404
3	+.232	+.362
4	+.306	+.302
5	+.365	+.227
6	+.406	+.141
7	+.427	+.048
8	+.427	–.048
9	+.406	–.141

Contact Hole Locations		
Contact Number	Location	
	X Axis	Y Axis
10	+.365	–.227
11	+.306	–.302
12	+.232	–.362
13	+.146	–.404
14	+.053	–.426
15	–.053	–.426
16	–.146	–.404
17	–.232	–.362
18	–.306	–.302
19	–.365	–.227
20	–.406	–.141
21	–.427	–.048
22	–.427	+.048
23	–.406	+.141
24	–.365	+.227
25	–.306	+.302
26	–.232	+.362
27	–.146	+.404
28	–.053	+.426
29	.000	+.323
30	+.098	+.322
31	+.184	+.280
32	+.258	+.220
33	+.311	+.141
34	+.332	+.048
35	+.332	–.048
36	+.311	–.141
37	+.258	–.220
38	+.184	–.280
39	+.098	–.322
40	.000	–.347
41	–.098	–.322
42	–.184	–.280
43	–.258	–.220
44	–.311	–.141

Contact Hole Locations		
Contact Number	Location	
	X Axis	Y Axis
45	–.332	–.048
46	–.332	+.048
47	–.311	+.141
48	–.258	+.220
49	–.184	+.280
50	–.098	+.322
51	–.048	+.241
52	+.048	+.241
53	+.134	+.199
54	+.208	+.139
55	+.237	+.048
56	+.237	–.048
57	+.208	–.139
58	+.134	–.199
59	+.048	–.241
60	–.048	–.241
61	–.134	–.199
62	–.208	–.139
63	–.237	–.048
64	–.237	+.048
65	–.208	+.139
66	–.134	+.199
67	–.048	+.146
68	+.048	+.146
69	+.125	+.090
70	+.155	.000
71	+.125	–.090
72	+.048	–.146
73	–.048	–.146
74	–.125	–.090
75	–.155	.000
76	–.125	+.090
77	.000	+.053
78	+.048	–.029
79	–.048	–.029

All dimensions for reference only. For alternate rotations see page 240.
Note: Shown in this catalog are the most common insert patterns for PCB applications. For availability of other arrangements, consult Amphenol Corp., Sidney, NY.

Insert Arrangement #20-41 / 21-41

Connector Type:	JT MIL-DTL-38999 Series II	LJT MIL-DTL-38999 Series I	Tri-Start MIL-DTL-38999 Series III
Insert Designation:	20-41	21-41	21-41

Number of Contacts	Contact Size	Service Rating
41	20	I

Contact Locations
Front face of pin insert shown

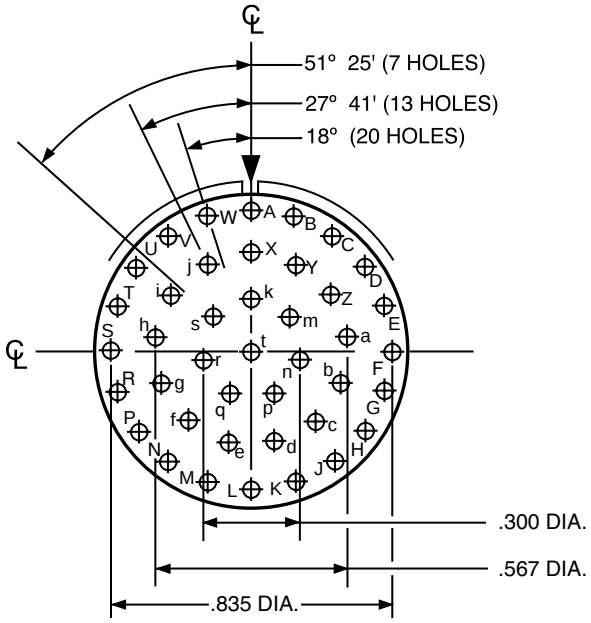

All dimensions for reference only. For alternate rotations see page 240.
Note: Shown in this catalog are the most common insert patterns for PCB applications. For availability of other arrangements, consult Amphenol Corp., Sidney, NY.

Insert Arrangement #22-35 / 23-35

Connector Type:	JT MIL-DTL-38999 Series II	LJT MIL-DTL-38999 Series I	Tri-Start MIL-DTL-38999 Series III
Insert Designation:	22-35	23-35	23-35

Number of Contacts	Contact Size	Service Rating
100	22D	M

Contact Locations
Front face of pin insert shown

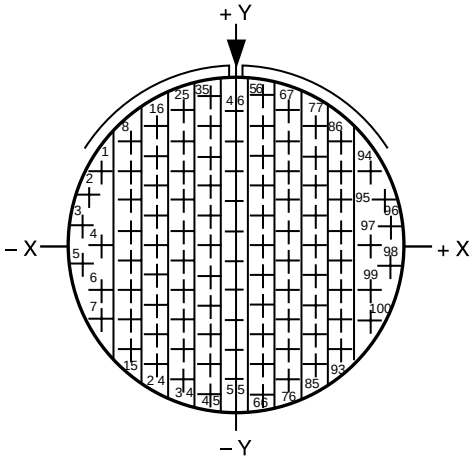

Contact Hole Locations		
Contact Number	Location	
	X Axis	Y Axis
1	–.428	+.241
2	–.467	+.154
3	–.488	+.061
4	–.415	.000
5	–.488	–.061
6	–.428	–.142
7	–.428	–.237
8	–.332	+.333
9	–.332	+.238
10	–.332	+.143
11	–.332	+.048
12	–.332	–.047
13	–.332	–.142
14	–.332	–.237
15	–.332	–.332
16	–.249	+.380
17	–.249	+.285
18	–.249	+.190
19	–.249	+.095
20	–.249	.000

Contact Hole Locations		
Contact Number	Location	
	X Axis	Y Axis
21	–.249	–.095
22	–.249	–.190
23	–.249	–.285
24	–.249	–.380
25	–.166	+.428
26	–.166	+.333
27	–.166	+.238
28	–.166	+.143
29	–.166	+.048
30	–.166	–.047
31	–.166	–.142
32	–.166	–.237
33	–.166	–.332
34	–.166	–.427
35	–.083	+.475
36	–.083	+.380
37	–.083	+.285
38	–.083	+.190
39	–.083	+.095
40	–.083	.000
41	–.083	–.095
42	–.083	–.190
43	–.083	–.285
44	–.083	–.380
45	–.083	–.475
46	.000	+.428
47	.000	+.333
48	.000	+.238
49	.000	+.143
50	.000	+.048
51	.000	–.047
52	.000	–.142
53	.000	–.237
54	.000	–.332
55	.000	–.427
56	+.083	+.475
57	+.083	+.380
58	+.083	+.285
59	+.083	+.190
60	+.083	+.095

Contact Hole Locations		
Contact Number	Location	
	X Axis	Y Axis
61	+.083	.000
62	+.083	–.095
63	+.083	–.190
64	+.083	–.285
65	+.083	–.380
66	+.083	–.475
67	+.166	+.428
68	+.166	+.333
69	+.166	+.238
70	+.166	+.143
71	+.166	+.048
72	+.166	–.047
73	+.166	–.142
74	+.166	–.237
75	+.166	–.332
76	+.166	–.427
77	+.249	+.380
78	+.249	+.285
79	+.249	+.190
80	+.249	+.095
81	+.249	.000
82	+.249	–.095
83	+.249	–.190
84	+.249	–.285
85	+.249	–.380
86	+.332	+.333
87	+.332	+.238
88	+.332	+.143
89	+.332	+.048
90	+.332	–.047
91	+.332	–.142
92	+.332	–.237
93	+.332	–.332
94	+.428	+.241
95	+.467	+.154
96	+.488	+.061
97	+.415	.000
98	+.488	–.061
99	+.428	–.142
100	+.428	–.237

All dimensions for reference only. For alternate rotations see page 240.
Note: Shown in this catalog are the most common insert patterns for PCB applications. For availability of other arrangements, consult Amphenol Corp., Sidney, NY.

Insert Arrangement #22-55 / 23-55

Connector Type:	JT MIL-DTL-38999 Series II	LJT MIL-DTL-38999 Series I	Tri-Start MIL-DTL-38999 Series III	Number of Contacts	Contact Size	Service Rating
Insert Designation:	22-55	23-55	23-55	55	20	I

Contact Locations
Front face of pin insert shown

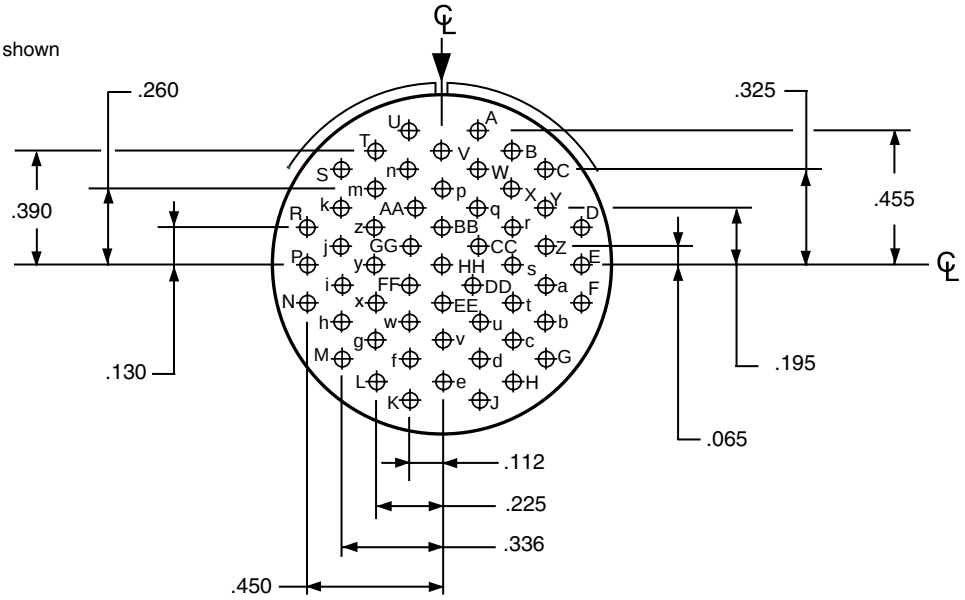

Insert Arrangement #24-31 / 25-31

Connector Type:	JT MIL-DTL-38999 Series II	LJT MIL-DTL-38999 Series I	Tri-Start MIL-DTL-38999 Series III	Number of Contacts	Contact Size	Service Rating
Insert Designation:	24-31	NA	NA	31	16	I

Contact Locations
Front face of pin insert shown

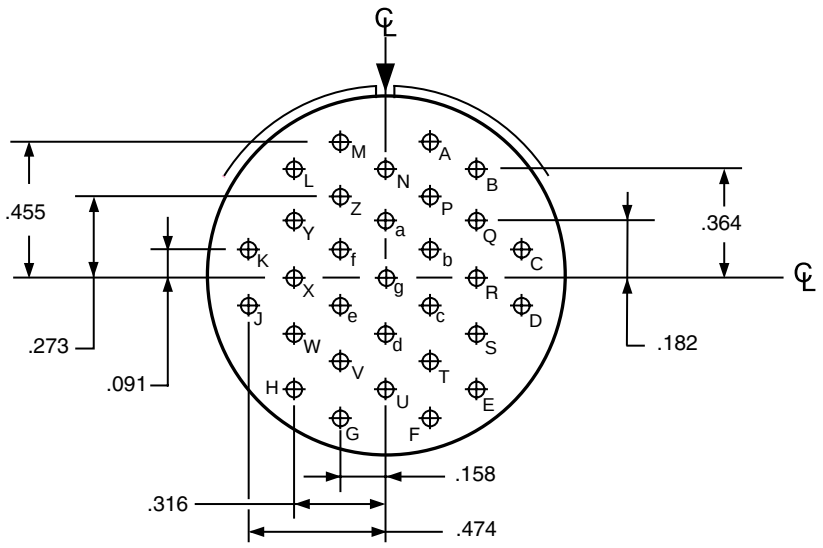

All dimensions for reference only. For alternate rotations see page 240.
Note: Shown in this catalog are the most common insert patterns for PCB applications. For availability of other arrangements, consult Amphenol Corp., Sidney, NY.

Insert Arrangement #24-35 / 25-35

Connector Type:	JT MIL-DTL-38999 Series II	LJT MIL-DTL-38999 Series I	Tri-Start MIL-DTL-38999 Series III
Insert Designation:	24-35	25-35	25-35

Number of Contacts	Contact Size	Service Rating
128	22D	M

Contact Locations
Front face of pin insert shown

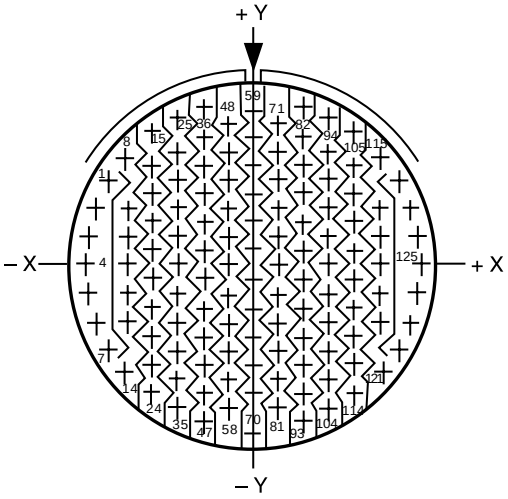

Contact Hole Locations		
Contact Number	Location	
	X Axis	Y Axis
1	–.479	+.279
2	–.520	+.190
3	–.546	+.095
4	–.555	.000
5	–.546	–.095
6	–.520	–.190
7	–.479	–.279
8	–.424	+.357
9	–.415	+.190
10	–.415	+.095
11	–.415	.000
12	–.415	–.095
13	–.415	–.190
14	–.424	–.357
15	–.332	+.444
16	–.332	+.332
17	–.332	+.237
18	–.332	+.142
19	–.332	+.047
20	–.332	–.047
21	–.332	–.142
22	–.332	–.237
23	–.332	–.332
24	–.332	–.427
25	–.249	+.496
26	–.249	+.380
27	–.249	+.285
28	–.249	+.190

Contact Hole Locations		
Contact Number	Location	
	X Axis	Y Axis
29	–.249	+.095
30	–.249	.000
31	–.249	–.095
32	–.249	–.190
33	–.249	–.285
34	–.249	–.380
35	–.249	–.475
36	–.160	+.531
37	–.166	+.427
38	–.166	+.332
39	–.166	+.237
40	–.166	+.142
41	–.166	+.047
42	–.166	–.047
43	–.166	–.142
44	–.166	–.237
45	–.166	–.332
46	–.166	–.427
47	–.166	–.522
48	–.083	+.475
49	–.083	+.380
50	–.083	+.285
51	–.083	+.190
52	–.083	+.095
53	–.083	.000
54	–.083	–.095
55	–.083	–.190
56	–.083	–.285
57	–.083	–.380
58	–.083	–.475
59	.000	+.522
60	.000	+.427
61	.000	+.332
62	.000	+.237
63	.000	+.142
64	.000	+.047
65	.000	–.047
66	.000	–.142
67	.000	–.237
68	.000	–.332
69	.000	–.427
70	.000	–.555
71	+.083	+.475
72	+.083	+.380
73	+.083	+.285
74	+.083	+.190
75	+.083	+.095
76	+.083	.000
77	+.083	–.095
78	+.083	–.190

Contact Hole Locations		
Contact Number	Location	
	X Axis	Y Axis
79	+.083	–.285
80	+.083	–.380
81	+.083	–.475
82	+.160	+.531
83	+.166	+.427
84	+.166	+.332
85	+.166	+.237
86	+.166	+.142
87	+.166	+.047
88	+.166	–.047
89	+.166	–.142
90	+.166	–.237
91	+.166	–.332
92	+.166	–.427
93	+.166	–.522
94	+.249	+.496
95	+.249	+.380
96	+.249	+.285
97	+.249	+.190
98	+.249	+.095
99	+.249	.000
100	+.249	–.095
101	+.249	–.190
102	+.249	–.285
103	+.249	–.380
104	+.249	–.475
105	+.332	+.444
106	+.332	+.332
107	+.332	+.237
108	+.332	+.142
109	+.332	+.047
110	+.332	–.047
111	+.332	–.142
112	+.332	–.237
113	+.332	–.332
114	+.332	–.427
115	+.424	+.357
116	+.415	+.190
117	+.415	+.095
118	+.415	.000
119	+.415	–.095
120	+.415	–.190
121	+.424	–.357
122	+.479	+.279
123	+.520	+.190
124	+.546	+.095
125	+.555	.000
126	+.546	–.095
127	+.520	–.190
128	+.479	–.279

All dimensions for reference only. For alternate rotations see page 240.
Note: Shown in this catalog are the most common insert patterns for PCB applications. For availability of other arrangements, consult Amphenol Corp., Sidney, NY.

Amphenol Aerospace

Insert Arrangement #24-61 / 25-61

Connector Type:	JT MIL-DTL-38999 Series II	LJT MIL-DTL-38999 Series I	Tri-Start MIL-DTL-38999 Series III
Insert Designation:	24-61	25-61	25-61

Number of Contacts	Contact Size	Service Rating
61	20	I

Contact Locations
Front face of pin insert shown

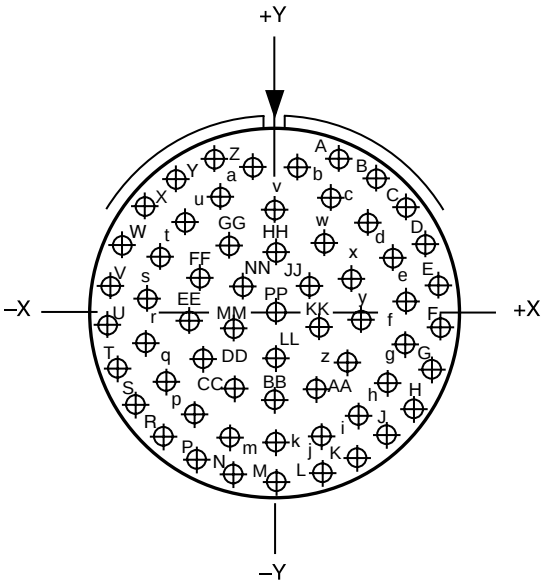

Contact Hole Locations		
Contact Number	Location	
	X Axis	Y Axis
A	+.196	+.500
B	+.314	+.435
C	+.413	+.343
D	+.485	+.230
E	+.527	+.101
F	+.536	–.030
G	+.511	–.164
H	+.454	–.287
J	+.368	–.391
K	+.259	–.470
L	+.134	–.519
M	.000	–.537
N	–.134	–.519
P	–.259	–.470
R	–.368	–.391
S	–.454	–.287
T	–.511	–.164
U	–.536	–.030
V	–.527	+.101
W	–.485	+.230
X	–.413	+.343
Y	–.314	+.435
Z	–.196	+.500
a	–.068	+.454
b	+.068	+.454
c	+.173	+.363
d	+.285	+.283
e	+.362	+.175
f	+.399	+.046

Contact Hole Locations		
Contact Number	Location	
	X Axis	Y Axis
g	+.392	–.088
h	+.341	–.213
i	+.251	–.314
j	+.133	–.379
k	.000	–.402
m	–.133	–.379
n	–.251	–.314
p	–.341	–.213
q	–.392	–.088
r	–.399	+.046
s	–.362	+.175
t	–.285	+.283
u	–.173	+.363
v	.000	+.338
w	+.147	+.223
x	+.237	+.122
y	+.267	–.010
z	+.228	–.139
AA	+.131	–.233
BB	.000	–.267
CC	–.131	–.233
DD	–.228	–.139
EE	–.267	–.010
FF	–.237	+.122
GG	–.147	+.223
HH	.000	+.200
JJ	+.105	+.094
KK	+.135	–.041
LL	.000	–.132
MM	–.135	–.041
NN	–.105	+.094
PP	.000	.000

All dimensions for reference only. For alternate rotations see page 240.
Note: Shown in this catalog are the most common insert patterns for PCB applications. For availability of other arrangements, consult Amphenol Corp., Sidney, NY.

Series III TV

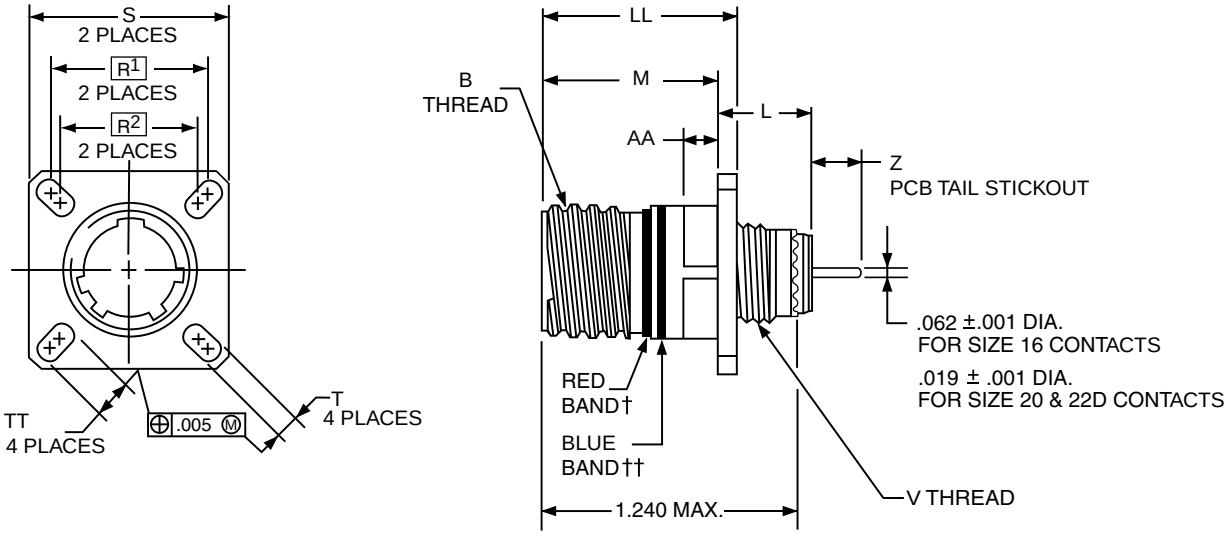

PART #	1. Shell Finish	2. Base Number	3. Coded Shell Size	4. Insert Arrangement	5. Contact Type/Alt. Keying Positions
See chart below	88/91	569	76X	- 35	P

HOW TO ORDER

1. Select a Shell Finish:

88	Designates olive drab cadmium plated connector shell
91	Designates electroless nickel plated connector shell

2. Base Number:

569	Base Number

3. Select a Coded Shell Size:

See chart below 761-769, designates size 9-25 shell size.
Example: 761= Size 9 Shell

4. Select an Insert Arrangement:

Refer to insert availability chart on page 239 and pin-out illustrations on pages 241-255. In the chart the first number represents the Shell size and the second number is the insert Arrangement.

-35	Designates Insert Arrangement Number

5. Contact Type/Alternate Keying Positions:

Refer to page 240 for alternate rotation letters to use.

P	Designates Pin Contacts in Normal Position
S	Designates Socket Contacts in Normal Position

Shell Size	Part Number	B Thread Class 2A (Plated) 0.1P-0.3L-TS	L Max.	M +.000 –.005	R1	R2	S Max.	T +.008 –.006	V Thread Metric	AA Max. Panel Thickness	LL +.006 –.000	TT +.008 –.006	Z Size 16 & 20 Contacts	Z Size 22D Contacts
9	88/91-569761-XXX	.6250	.469	.820	.719	.594	.948	.128	M12X1-6g	.234	.905	.216	.228–.178	.242–.181
11	762-XXX	.7500	.469	.820	.812	.719	1.043	.128	M15X1-6g	.234	.905	.194	.228–.178	.242–.181
13	763-XXX	.8750	.469	.820	.906	.812	1.137	.128	M18X1-6g	.234	.905	.194	.228–.178	.242–.181
15	764-XXX	1.0000	.469	.820	.969	.906	1.232	.128	M22X1-6g	.234	.905	.173	.228–.178	.242–.181
17	765-XXX	1.1875	.469	.820	1.062	.969	1.323	.128	M25X1-6g	.234	.905	.194	.228–.178	.242–.181
19	766-XXX	1.2500	.469	.820	1.156	1.062	1.449	.128	M28X1-6g	.234	.905	.194	.228–.178	.242–.181
21	767-XXX	1.3750	.500	.790	1.250	1.156	1.575	.128	M31X1-6g	.204	.905	.194	.228–.178	.242–.181
23	768-XXX	1.5000	.500	.790	1.375	1.250	1.701	.154	M34X1-6g	.204	.905	.242	.228–.178	.242–.181
25	769-XXX	1.6250	.500	.790	1.500	1.375	1.823	.154	M37X1-6g	.204	.905	.242	.228–.178	.242–.181

All dimensions for reference only.
Composite Series III connectors with PBC Contacts are available; consult Amphenol, Sidney, NY.
Z dimension is determined by contact type in the insert arrangement.
Most common options are shown; other options are available.

☐ Designates true position dimensioning
† Red band indicates fully mated
†† Blue band indicates rear release contact retention system

(Back Panel Mounting) (With Clinch Nuts)

Amphenol Aerospace

Series III TV

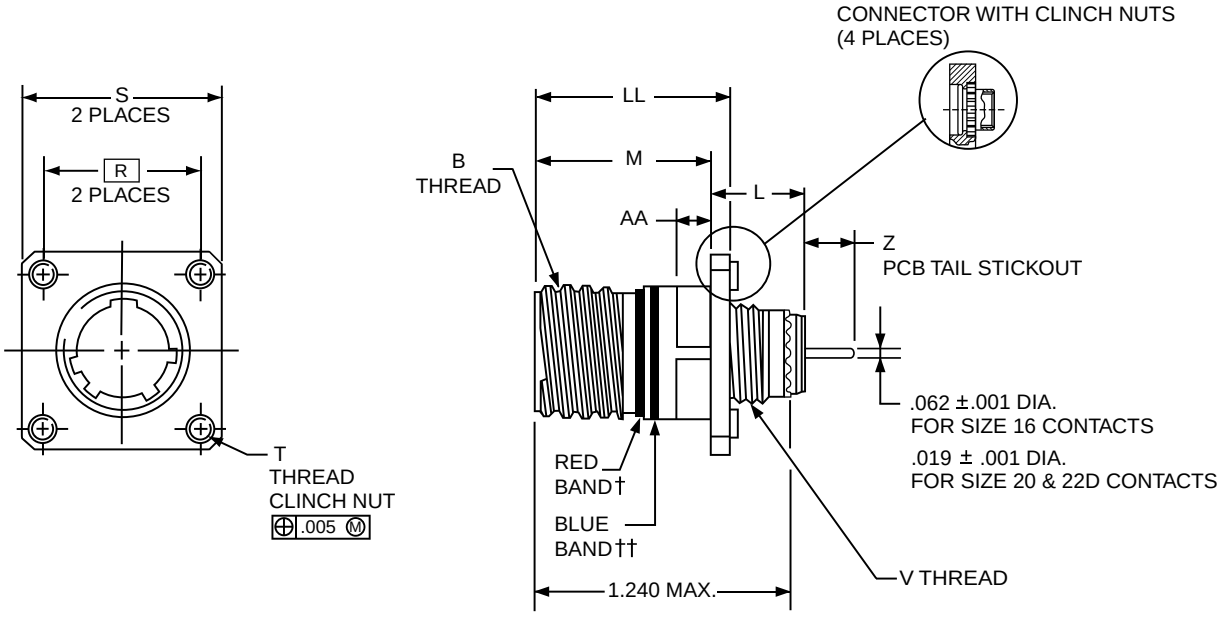

PART #	1. Shell Finish	2. Base Number	3. Coded Shell Size	4. Insert Arrangement	5. Contact Type/Alt. Keying Positions
See chart below	88/91	628	74	-35	P

HOW TO ORDER

1. Select a Shell Finish:

88	Designates olive drab cadmium plated connector shell
91	Designates electroless nickel plated connector shell

2. Base Number:

628	Base Number

3. Select a Coded Shell Size:

See chart below 741-749, designates size 9-25 shell size.
Example: 741= Size 9 Shell

4. Select an Insert Arrangement:

Refer to insert availability chart on page 239 and pin-out illustrations on pages 241-255. In the chart the first number represents the Shell size and the second number is the insert Arrangement.

-35	Designates Insert Arrangement Number

5. Contact Type/Alternate Keying Positions:

Refer to page 240 for alternate rotation letters to use.

P	Designates Pin Contacts in Normal Position
S	Designates Socket Contacts in Normal Position

Shell Size	Part Number with Clinch Nuts*	B Thread Class 2A (Plated) 0.1P-0.3L-TS	L Max.	M +.000 –.005	R	S Max.	T Thread	V Thread Metric	AA Max. Panel Thickness	LL +.006 –.000	Z	
											Size 16 & 20 Contacts	Size 22D Contacts
9	88/91-628741-XXX	.6250	.469	.820	.719	1.094	.112-40UNC-3B	M12X1-6g	.234	.905	.228–.178	.242–.181
11	742-XXX	.7500	.469	.820	.812	1.187	.112-40UNC-3B	M15X1-6g	.234	.905	.228–.178	.242–.181
13	743-XXX	.8750	.469	.820	.906	1.281	.112-40UNC-3B	M18X1-6g	.234	.905	.228–.178	.242–.181
15	744-XXX	1.0000	.469	.820	.969	1.344	.112-40UNC-3B	M22X1-6g	.234	.905	.228–.178	.242–.181
17	745-XXX	1.1875	.469	.820	1.062	1.437	.112-40UNC-3B	M25X1-6g	.234	.905	.228–.178	.242–.181
19	746-XXX	1.2500	.469	.820	1.156	1.531	.112-40UNC-3B	M28X1-6g	.234	.905	.228–.178	.242–.181
21	747-XXX	1.3750	.500	.790	1.250	1.625	.112-40UNC-3B	M31X1-6g	.204	.905	.228–.178	.242–.181
23	748-XXX	1.5000	.500	.790	1.375	1.750	.138-32UNC-3B	M34X1-6g	.204	.905	.228–.178	.242–.181
25	749-XXX	1.6250	.500	.790	1.500	1.875	.138-32UNC-3B	M37X1-6g	.204	.905	.228–.178	.242–.181

All dimensions for reference only.
*Consult Amphenol for more information on ordering connectors with clinch nuts.
Composite Series III connectors with PBC Contacts are available; consult Amphenol, Sidney, NY.
Z dimension is determined by contact type in the insert arrangement.
Most common options are shown; other options are available.

☐ Designates true position dimensioning
† Red band indicates fully mated
†† Blue band indicates rear release contact retention system

Series III TV

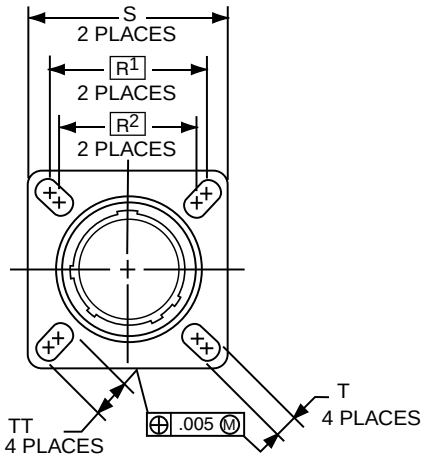

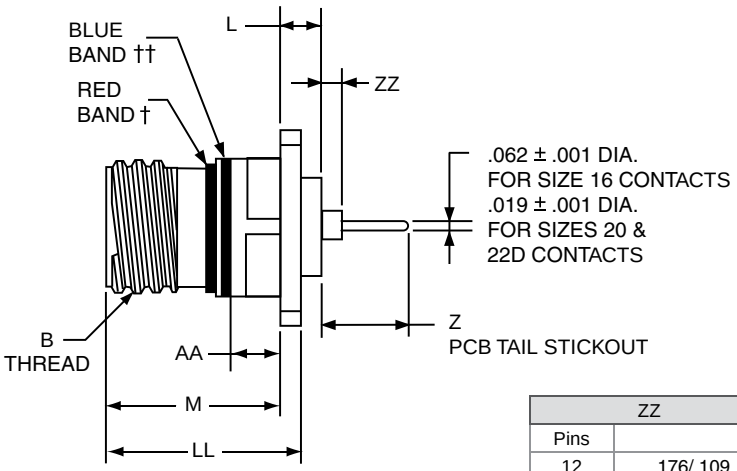

ZZ	
Pins	
12	.176/.109
16	.044/-.013
20	.161/.094
22D	.092/.025
Sockets	
12	.176/.109
16	.092/.035
20	.161/.094
22D	.159/.088

PART #
See chart below

1. Shell Finish	2. Base Number	3. Coded Shell Size	4. Insert Arrangement	5. Contact Type/Alt. Keying Positions
88/91	569	771	-35	P

HOW TO ORDER

1. Select a Shell Finish:

88	Designates olive drab cadmium plated connector shell
91	Designates electroless nickel plated connector shell

2. Base Number:

569	Base Number

3. Select a Coded Shell Size:

See chart below 771-779, designates size 9-25 shell size.
Example: 771= Size 9 Shell

4. Select an Insert Arrangement:

Refer to insert availability chart on page 239 and pin-out illustrations on pages 241-255. In the chart the first number represents the Shell size and the second number is the insert Arrangement.

-35	Designates Insert Arrangement Number

5. Contact Type/Alternate Keying Positions:

Refer to page 240 for alternate rotation letters to use.

P	Designates Pin Contacts in Normal Position
S	Designates Socket Contacts in Normal Position

Shell Size	Part Number	B Thread Class 2A (Plated) 0.1P-0.3L-TS	L Max.	M +.000 –.005	R1	R2	S Max.	T +.008 –.006	AA Max. Panel Thickness	LL +.006 –.000	TT +.008 –.006	Z Size 16 & 20 Contacts	Z Size 22D Contacts
9	88/91-**569**771-XXX	.6250	.205	.820	.719	.594	.948	.128	.234	.905	.216	.460–.375	.471–.399
11	772-XXX	.7500	.205	.820	.812	.719	1.043	.128	.234	.905	.194	.460–.375	.471–.399
13	773-XXX	.8750	.205	.820	.906	.812	1.137	.128	.234	.905	.194	.460–.375	.471–.399
15	774-XXX	1.0000	.205	.820	.969	.906	1.232	.128	.234	.905	.173	.460–.375	.471–.399
17	775-XXX	1.1875	.205	.820	1.062	.969	1.323	.128	.234	.905	.194	.460–.375	.471–.399
19	776-XXX	1.2500	.205	.820	1.156	1.062	1.449	.128	.234	.905	.194	.460–.375	.471–.399
21	777-XXX	1.3750	.235	.790	1.250	1.156	1.575	.128	.204	.905	.194	.460–.375	.471–.399
23	778-XXX	1.5000	.235	.790	1.375	1.250	1.701	.154	.204	.905	.242	.460–.375	.471–.399
25	779-XXX	1.6250	.235	.790	1.500	1.375	1.823	.154	.204	.905	.242	.460–.375	.471–.399

All dimensions for reference only.
Composite Series III connectors with PBC Contacts are available; consult Amphenol, Sidney, NY.
Z dimension is determined by contact type in the insert arrangement.
Most common options are shown; other options are available.

☐ Designates true position dimensioning
† Red band indicates fully mated
†† Blue band indicates rear release contact retention system

Amphenol Aerospace

Series III TV

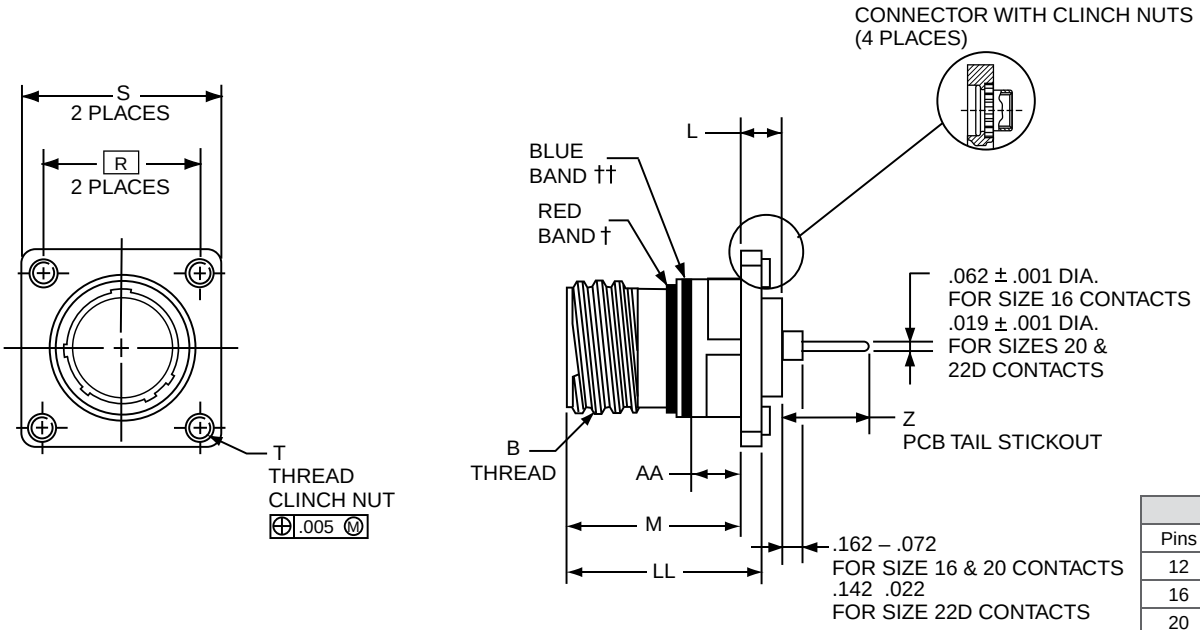

ZZ	
Pins	
12	.176/.109
16	.044/-.013
20	.161/.094
22D	.092/.025
Socket	
12	.176/.109
16	.092/.035
20	.161/.094
22D	.159/.088

PART # See chart below

1. Shell Finish	2. Base Number	3. Coded Shell Size	4. Insert Arrangement	5. Contact Type/Alt. Keying Positions
88/91	628	751	- 35	P

HOW TO ORDER

1. Select a Shell Finish:

88	Designates olive drab cadmium plated connector shell
91	Designates electroless nickel plated connector shell

2. Base Number:

628	Base Number

3. Select a Coded Shell Size:

See chart below 751-759, designates size 9-25 shell size.
Example: 751= Size 9 Shell

4. Select an Insert Arrangement:

Refer to insert availability chart on page 239 and pin-out illustrations on pages 241-255. In the chart the first number represents the Shell size and the second number is the insert Arrangement.

-35	Designates Insert Arrangement Number

5. Contact Type/Alternate Keying Positions:

Refer to page 240 for alternate rotation letters to use.

P	Designates Pin Contacts in Normal Position
S	Designates Socket Contacts in Normal Position

Shell Size	Part Number with Clinch Nuts*	B Thread Class 2A (Plated) 0.1P-0.3L-TS	L Max.	M +.000 –.005	R	S Max.	T Thread	AA Max. Panel Thickness	LL +.006 –.000	Z Size 16 & 20 Contacts	Z Size 22D Contacts
9	88/91-628751-XXX	.6250	.205	.820	.719	1.031	.112-40UNC-3B	.234	.905	.460–.375	.471–.399
11	752-XXX	.7500	.205	.820	.812	1.125	.112-40UNC-3B	.234	.905	.460–.375	.471–.399
13	753-XXX	.8750	.205	.820	.906	1.172	.112-40UNC-3B	.234	.905	.460–.375	.471–.399
15	754-XXX	1.0000	.205	.820	.969	1.281	.112-40UNC-3B	.234	.905	.460–.375	.471–.399
17	755-XXX	1.1875	.205	.820	1.062	1.375	.112-40UNC-3B	.234	.905	.460–.375	.471–.399
19	756-XXX	1.2500	.205	.820	1.156	1.469	.112-40UNC-3B	.234	.905	.460–.375	.471–.399
21	757-XXX	1.3750	.235	.790	1.250	1.562	.112-40UNC-3B	.204	.905	.460–.375	.471–.399
23	758-XXX	1.5000	.235	.790	1.375	1.750	.112-40UNC-3B	.204	.905	.460–.375	.471–.399
25	759-XXX	1.6250	.235	.790	1.500	1.875	.112-40UNC-3B	.204	.905	.460–.375	.471–.399

All dimensions for reference only.
* Consult Amphenol for more information on ordering connectors with clinch nuts.
Composite Series III connectors with PBC Contacts are available; consult Amphenol, Sidney, NY.
• Z dimension is determined by contact type in the insert arrangement.
• Most common options are shown; other options are available.

☐ Designates true position dimensioning
† Red band indicates fully mated
†† Blue band indicates rear release contact retention system

Series III TV

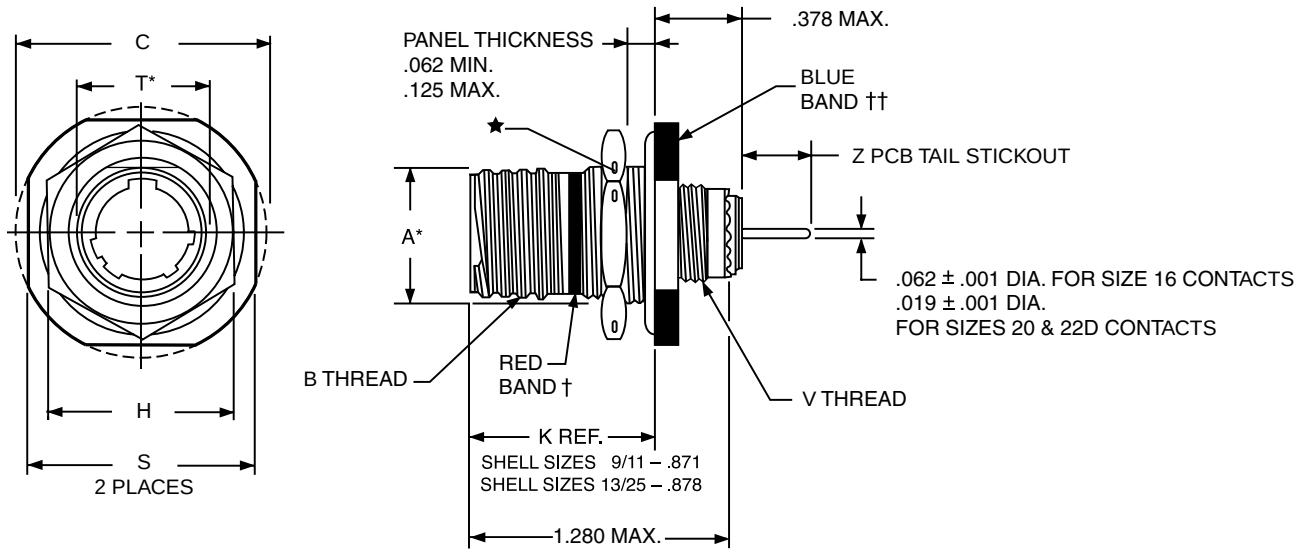

PART # See chart below	1. Shell Finish	2. Base Number	3. Coded Shell Size	4. Insert Arrangement	5. Contact Type/Alt. Keying Positions
	88/91	569	781	- 35	P

HOW TO ORDER

1. Select a Shell Finish:

88	Designates olive drab cadmium plated connector shell
91	Designates electroless nickel plated connector shell

2. Base Number:

569	Base Number

3. Select a Coded Shell Size:

See chart below **781-789**, designates size 9-25 shell size.
Example: **781**= Size 9 Shell

4. Select an Insert Arrangement:

Refer to insert availability chart on page 239 and pin-out illustrations on pages 241-255. In the chart the first number represents the Shell size and the second number is the insert Arrangement.

-35	Designates Insert Arrangement Number

5. Contact Type/Alternate Keying Positions:

Refer to page 240 for alternate rotation letters to use.

P	Designates Pin Contacts in Normal Position
S	Designates Socket Contacts in Normal Position

Shell Size	Part Number	A* +.000 –.010	B Thread Class 2A (Plated) 0.1P-0.3L-TS	C Max.	H Hex +.017 –.016	S ±.010	T +.010 –.000	V Thread Metric	Z Size 16 & 20 Contacts	Z Size 22D Contacts
9	88/91-**569**781-XXX	.669	.6250	1.199	.875	1.062	.697	M12X1-6g	.244 – .200	.258 – .206
11	**782**-XXX	.769	.7500	1.386	1.000	1.250	.822	M15X1-6g	.244 – .200	.258 – .206
13	**783**-XXX	.955	.8750	1.511	1.188	1.375	1.007	M18X1-6g	.244 – .200	.258 – .206
15	**784**-XXX	1.084	1.0000	1.636	1.312	1.500	1.134	M22X1-6g	.244 – .200	.258 – .206
17	**785**-XXX	1.208	1.1875	1.761	1.438	1.625	1.259	M25X1-6g	.244 – .200	.258 – .206
19	**786**-XXX	1.333	1.2500	1.949	1.562	1.812	1.384	M28X1-6g	.222 – .177	.236 – .180
21	**787**-XXX	1.459	1.3750	2.073	1.688	1.938	1.507	M31X1-6g	.222 – .177	.236 – .180
23	**788**-XXX	1.575	1.5000	2.199	1.812	2.062	1.634	M34X1-6g	.222 – .177	.236 – .180
25	**789**-XXX	1.709	1.6250	2.323	2.000	2.188	1.759	M37X1-6g	.222 – .177	.236 – .180

All dimensions for reference only.
Composite Series III connectors with PBC Contacts are available; consult Amphenol, Sidney, NY.
Z dimension is determined by contact type in the insert arrangement.
Most common options are shown; other options are available.

† Red band indicates fully mated
†† Blue band indicates rear release contact retention system
★.059 dia. min. 3 lockwire holes. Formed lockwire hole design (6 holes) is optional.
*"D" shaped mounting hole dimensions

Amphenol Aerospace

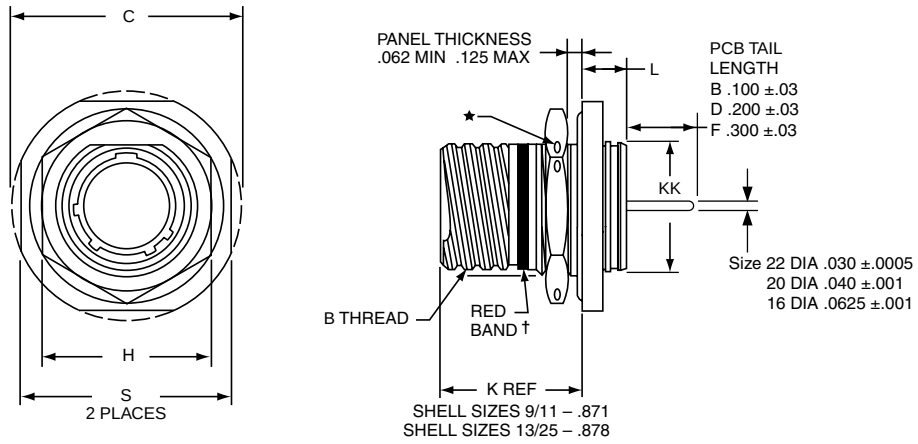

PANEL HOLE DIMENSIONS

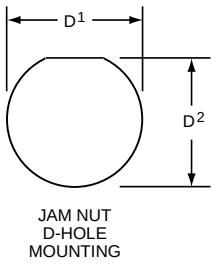

PART #
See chart below

1. Base Number	2. Coded Shell Size	3. Insert Arrg.	4. Contact Type/Alt. Keying Positions	5. Shell Finish	6. Tail Length
10-626	47 1	-35	P	1	B

HOW TO ORDER

1. Base Number:

10-626	Base Number for MIL-DTL-38999 Series III Hermetic with PCB Tail

2. Select a Coded Shell Size:

See chart below **471-479**, designates size 9-25 shell size

3. Select an Insert Arrangement:

Refer to insert availability chart on page 239 and pin-out illustrations on pages 241-255. In the chart the first number represents the Shell size and the second number is the insert Arrangement.

-35	Designates Insert Arrangement Number

4. Contact Type/Alternate Keying Positions:

Refer to page 240 for alternate rotation letters to use.

P	Designates Pin Contacts in Normal Position
S	Designates Socket Contacts in Normal Position

5. Select a Shell Finish:

1	Hermetic seal, passivated Stainless Steel, 200°C
2	Hermetic seal, Stainless Steel w/Nickel Plate

6. Select a Tail Length:

B	.100±.03
D	.200±.03
F	.300±.03

† Red band indicates fully mated

★ . 059 dia min.
1.5 dia min. 3 lockwire holes
Formed lockwire hole design (6 holes) is optional.

Shell Size	Part Number	B Thread Class 2A 0.1P-0.3L-TS (Plated)	C Max	D1 +.010 –.000	D2 +.000 –.010	H Hex +.017 –.016	L Max	S ±.010	KK +.011 –.000
9	**10-626471**-XXX	.6250	1.199	.700	.670	.875	.357	1.062	.642
11	**472**-XXX	.7500	1.386	.825	.770	1.000	.357	1.250	.766
13	**473**-XXX	.8750	1.511	1.010	.955	1.188	.357	1.375	.892
15	**474**-XXX	1.0000	1.636	1.135	1.085	1.312	.357	1.500	1.018
17	**475**-XXX	1.1875	1.761	1.260	1.210	1.438	.357	1.625	1.142
19	**476**-XXX	1.2500	1.949	1.385	1.335	1.562	.381	1.812	1.268
21	**477**-XXX	1.3750	2.073	1.510	1.460	1.688	.381	1.938	1.392
23	**478**-XXX	1.5000	2.199	1.635	1.585	1.812	.381	2.062	1.518
25	**479**-XXX	1.6250	2.323	1.760	1.710	2.000	.381	2.188	1.642

All dimensions for reference only.

Solder Mounting Receptacle

Series III TV

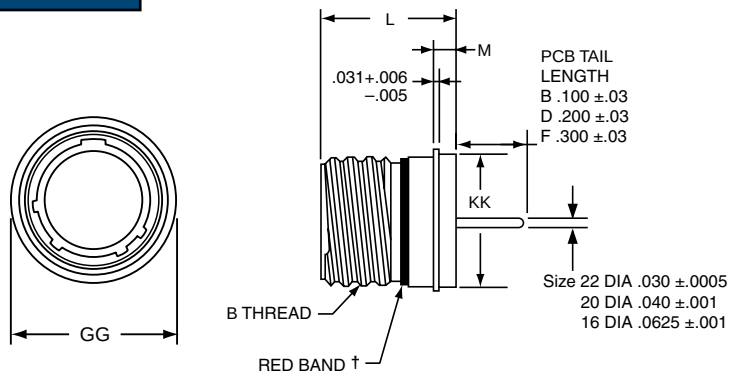

PART #
See chart below

1. Base Number	2. Shell Size	3. Insert Arrg.	4. Contact Type/Alt. Keying Positions	5. Shell Finish	6. Tail Length
10-626	48 1	-35	P	1	B

Follow HOW TO ORDER instructions below.

† Red band indicates fully mated

Shell Size	Part Number	B Thread Class 2A 0.1P-0.3L-TS (Plated)	L +.011 –.005	M +.006 –.005	GG Dia. +.011 –.010	KK Dia +.011 –.005
9	10-626481-XXX	.6250	.806	.125	.750	.672
11	482-XXX	.7500	.806	.125	.844	.781
13	483-XXX	.8750	.806	.125	.969	.906
15	484-XXX	1.0000	.806	.125	1.094	1.031
17	485-XXX	1.1875	.806	.125	1.218	1.156
19	486-XXX	1.2500	.806	.125	1.312	1.250
21	487-XXX	1.3750	.806	.125	1.438	1.375
23	488-XXX	1.5000	.838	.156	1.563	1.500
25	489-XXX	1.6250	.838	.156	1.688	1.625

38999, Series III Hermetic, Stainless Steel - PCB Contacts

TVSHIY Weld Mounting Receptacle

PART #
See chart below

1. Base Number	2. Coded Shell Size	3. Insert Arrg.	4. Contact Type/Alt. Keying Positions	5. Shell Finish	6. Tail Length
10-626	49 1	-35	P	1	B

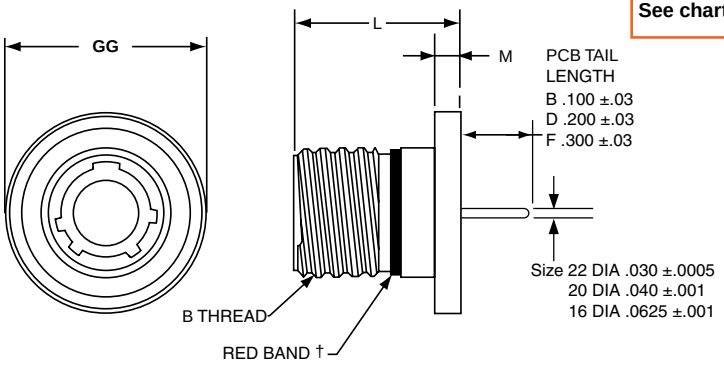

† Red band indicates fully mated

Shell Size	Part Number	B Thread Class 2A 0.1P-0.3L-TS (Plated)	L +.011 –.000	M +.006 –.005	GG Dia. +.011 –.010
9	10-626491-XXX	.6250	.806	.125	.973
11	492-XXX	.7500	.806	.125	1.095
13	493-XXX	.8750	.806	.125	1.221
15	494-XXX	1.0000	.806	.125	1.347
17	495-XXX	1.1875	.806	.125	1.434
19	496-XXX	1.2500	.806	.125	1.579
21	497-XXX	1.3750	.806	.125	1.721
23	498-XXX	1.5000	.838	.156	1.886
25	499-XXX	1.6250	.838	.156	1.973

* Not available for weld mount

All dimensions for reference only.

HOW TO ORDER

1. Base Number:

10-626	Base Number for MIL-DTL-38999 Series III Hermetic with PCB Tail

2. Select a Coded Shell Size:

See chart below 491-499, designates size 9-25 shell size

3. Select an Insert Arrangement:

Refer to insert availability chart on page 239 and pin-out illustrations on pages 241-255. In the chart the first number represents the Shell size and the second number is the insert Arrg.

-35	Designates Insert Arrangement Number

4. Contact Type/Alternate Keying Positions:

Refer to page 240 for alternate rotation letters to use.

P	Designates Pin Contacts in Normal Position
S	Designates Socket Contacts in Normal Position

5. Select a Shell Finish:

1	Hermetic seal, passivated Stainless Steel, 200°C
2	*Hermetic seal, Stainless Steel w/Nickel Plate

6. Select a Tail Length:

B	.100±.03
D	.200±.03
F	.300±.03

Box Mounting Receptacle

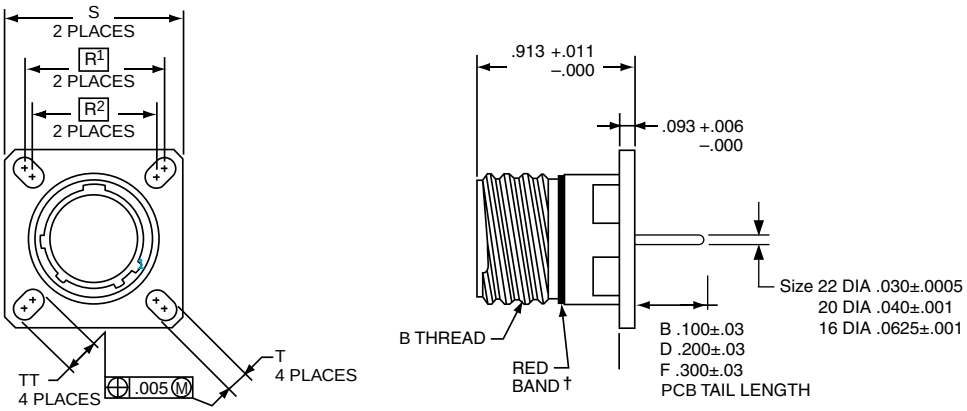

PART #
See chart below

1. Base Number	2. Coded Shell Size	3. Insert Arrg.	4. Contact Type/Alt. Keying Positions	5. Shell Finish	6. Tail Length
10-626	501	-35	P	1	B

HOW TO ORDER

1. Base Number:

10-626	Base Number for MIL-DTL-38999 Series III Hermetic with PCB Tail

2. Select a Coded Shell Size:

See chart below **501-509**, designates size 9-25 shell size.
Example: **501**= Size 9 Shell

3. Select an Insert Arrangement:

Refer to insert availability chart on page 239 and pin-out illustrations on pages 241-255. In the chart the first number represents the Shell size and the second number is the insert Arrangement.

-35	Designates Insert Arrangement Number

4. Contact Type/Alternate Keying Positions:

Refer to page 240 for alternate rotation letters to use.

P	Designates Pin Contacts in Normal Position
S	Designates Socket Contacts in Normal Position

5. Select a Shell Finish:

1	Hermetic seal, passivated Stainless Steel, 200°C
2	Hermetic seal, Stainless Steel w/Nickel Plate

6. Select a Tail Length:

B	.100±.03
D	.200±.03
F	.300±.03

Shell Size	Part Number	B Thread 0.1P-0.3L-TS (Plated)	R1	R2	S ±.010	T ±.008	TT ±.008
9	**10-626501**-XXX	.6250	.719	.594	.938	.128	.216
11	**502**-XXX	.7500	.812	.719	1.031	.128	.194
13	**503**-XXX	.8750	.906	.812	1.125	.128	.194
15	**504**-XXX	1.0000	.969	.906	1.219	.128	.173
17	**505**-XXX	1.1875	1.062	.969	1.312	.128	.194
19	**506**-XXX	1.2500	1.156	1.062	1.438	.128	.194
21	**507**-XXX	1.3750	1.250	1.156	1.562	.128	.194
23	**508**-XXX	1.5000	1.375	1.250	1.688	.154	.242
25	**509**-XXX	1.6250	1.500	1.375	1.812	.154	.242

† Red band indicates fully mated

NOTE: Consult Amphenol Aerospace for availability of non-glass-sealed versions with printed circuit tail contacts.

All dimensions for reference only

☐ Designates true position dimensioning

Series II JT

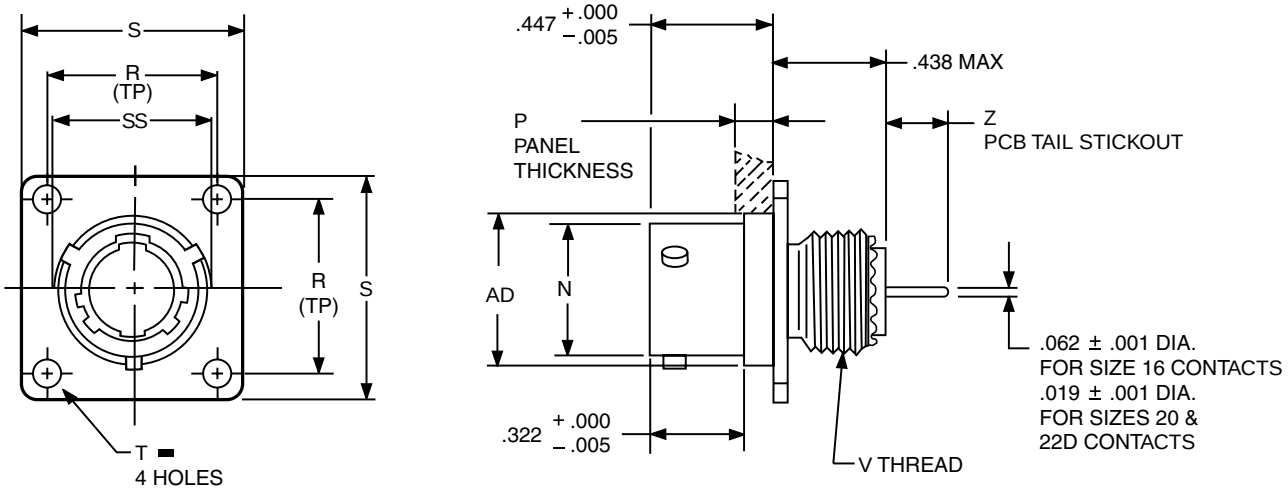

PART # See chart below	1. Shell Finish	2. Base Number	3. Coded Shell Size	4. Insert Arrangement	5. Contact Type/Alt. Keying Positions
	88/91	569	731	- 35	P

HOW TO ORDER

1. Select a Shell Finish:

88	Designates olive drab cadmium plated connector shell
91	Designates electroless nickel plated connector shell

2. Base Number:

569	Base Number

3. Select a Coded Shell Size:

See chart below 731-739, designates size 9-25 shell size.
Example: 731= Size 9 Shell

4. Select an Insert Arrangement:

Refer to insert availability chart on page 239 and pin-out illustrations on pages 241-255. In the chart the first number represents the Shell size and the second number is the insert Arrangement.

-35	Designates Insert Arrangement Number

5. Contact Type/Alternate Keying Positions:

Refer to page 240 for alternate rotation letters to use.

P	Designates Pin Contacts in Normal Position
S	Designates Socket Contacts in Normal Position

▬ Ⓣ .005 DIA Ⓜ

Shell Size	Part Number	N +.001 –.005	P Max. Panel Thickness	R (TP)	S ±.016	T Dia. ±.005	V Thread Class 2A (Plated)	AD Dia. ±.005	SS Dia. +.000 –.016	Z Size 16 & 20 Contacts	Z Size 22D Contacts
8	88/91-**569**731-XXX	.473	.142	.594	.812	.120	.4375-28 UNEF	.516	.563	.257 – .200	.268 – .178
10	732-XXX	.590	.142	.719	.938	.120	.5625-24 UNEF	.633	.680	.257 – .200	.268 – .178
12	733-XXX	.750	.142	.812	1.031	.120	.6875-24 UNEF	.802	.859	.257 – .200	.268 – .178
14	734-XXX	.875	.142	.906	1.125	.120	.8125-20 UNEF	.927	.984	.257 – .200	.268 – .178
16	735-XXX	1.000	.142	.969	1.219	.120	.9375-20 UNEF	1.052	1.108	.257 – .200	.268 – .178
18	736-XXX	1.125	.142	1.062	1.312	.120	1.0625-18 UNEF	1.177	1.233	.257 – .200	.268 – .178
20	737-XXX	1.250	.142	1.156	1.438	.120	1.1875-18 UNEF	1.302	1.358	.257 – .200	.268 – .178
22	738-XXX	1.375	.142	1.250	1.562	.120	1.3125-18 UNEF	1.427	1.483	.257 – .200	.268 – .178
24	739-XXX	1.500	.142	1.375	1.688	.147	1.4375-18 UNEF	1.552	1.610	.257 – .200	.268 – .178

All dimensions for reference only.
Z dimension is determined by contact type in the insert arrangement.
Most common options are shown; other options are available.

(Back Panel Mounting)

Series II JT

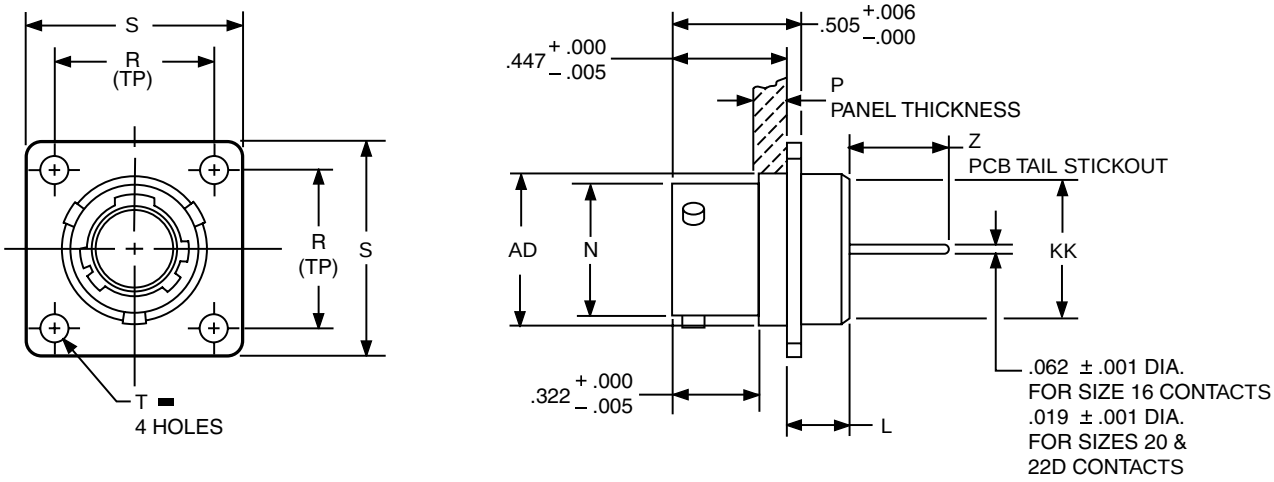

PART #	1. Shell Finish	2. Base Number	3. Coded Shell Size	4. Insert Arrangement	5. Contact Type/Alt. Keying Positions
See chart below	88/91	569	741	- 35	P

HOW TO ORDER

1. Select a Shell Finish:

88	Designates olive drab cadmium plated connector shell
91	Designates electroless nickel plated connector shell

2. Base Number:

569	Base Number

3. Select a Coded Shell Size:

See chart below 741-749, designates size 9-25 shell size.
Example: 741= Size 9 Shell

4. Select an Insert Arrangement:

Refer to insert availability chart on page 239 and pin-out illustrations on pages 241-255. In the chart the first number represents the Shell size and the second number is the insert Arrangement.

-35	Designates Insert Arrangement Number

5. Contact Type/Alternate Keying Positions:

Refer to page 240 for alternate rotation letters to use.

P	Designates Pin Contacts in Normal Position
S	Designates Socket Contacts in Normal Position

▬ Ⓣ .005 DIA Ⓜ

Shell Size	Part Number	L Max.	N +.001 –.005	P Max. Panel Thickness	R (TP)	S ±.016	T Dia. ±.005	AD Dia. ±.005	KK Dia. Max.	Z Size 16 & 20 Contacts	Z Size 22D Contacts
8	88/91-**569**741-XXX	.225	.473	.147	.594	.812	.120	.516	.531	.455 – .403	.466 – .409
10	**742**-XXX	.225	.590	.152	.719	.938	.120	.633	.656	.455 – .403	.466 – .409
12	**743**-XXX	.225	.750	.152	.812	1.031	.120	.802	.828	.455 – .403	.466 – .409
14	**744**-XXX	.225	.875	.152	.906	1.125	.120	.927	.953	.455 – .403	.466 – .409
16	**745**-XXX	.225	1.000	.152	.969	1.219	.120	1.052	1.078	.455 – .403	.466 – .409
18	**746**-XXX	.225	1.125	.152	1.062	1.312	.120	1.177	1.203	.455 – .403	.466 – .409
20	**747**-XXX	.225	1.250	.179	1.156	1.438	.120	1.302	1.328	.455 – .403	.466 – .409
22	**748**-XXX	.225	1.375	.179	1.250	1.562	.120	1.427	1.453	.455 – .403	.466 – .409
24	**749**-XXX	.225	1.500	.169	1.375	1.688	.147	1.552	1.578	.455 – .403	.466 – .409

All dimensions for reference only.
Z dimension is determined by contact type in the insert arrangement.
Most common options are shown; other options are available.

Series II JT

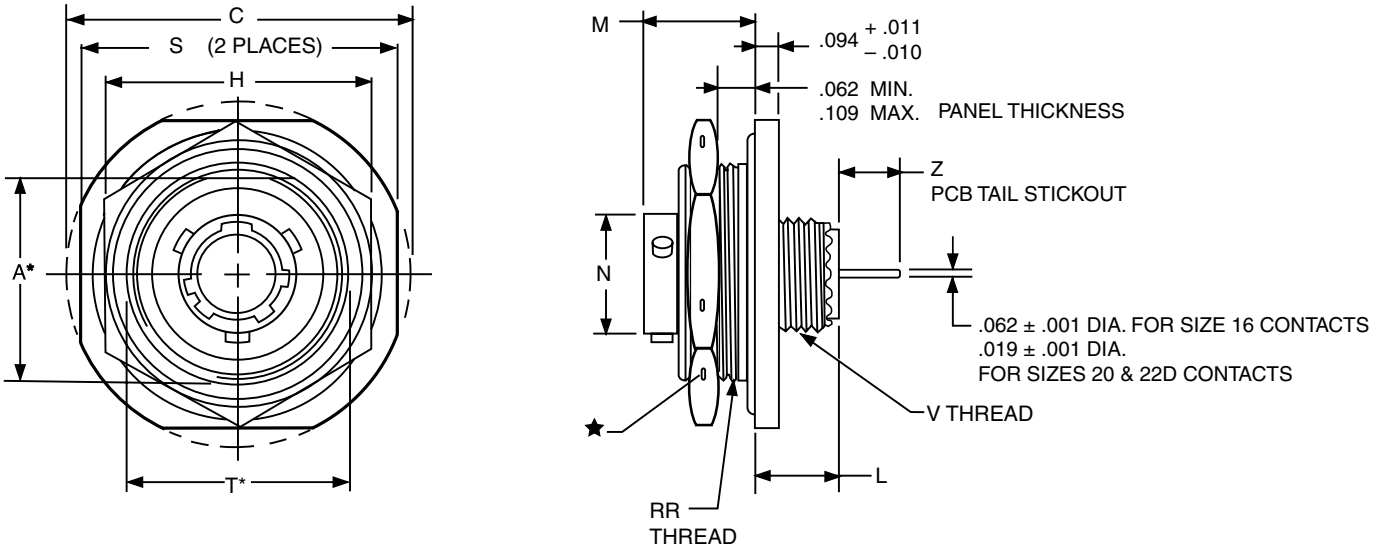

	1.	2.	3.	4.	5.
PART # See chart below	Shell Finish	Base Number	Coded Shell Size	Insert Arrangement	Contact Type/Alt. Keying Positions
	88/91	**569**	**75** *1*	*- 35*	*P*

HOW TO ORDER

1. Select a Shell Finish:

88	Designates olive drab cadmium plated connector shell
91	Designates electroless nickel plated connector shell

2. Base Number:

569	Base Number

3. Select a Coded Shell Size:

See chart below **751-759**, designates size 8-25 shell size.
Example: **751**= Size 8 Shell

4. Select an Insert Arrangement:

Refer to insert availability chart on page 239 and pin-out illustrations on pages 241-255. In the chart the first number represents the Shell size and the second number is the insert Arrangement.

-35	Designates Insert Arrangement Number

5. Contact Type/Alternate Keying Positions:

Refer to page 240 for alternate rotation letters to use.

P	Designates Pin Contacts in Normal Position
S	Designates Socket Contacts in Normal Position

Shell Size	Part Number	A* +.000 –.010	C Max.	H Hex +.017 –.016	L Max.	M ±.005	N +.001 –.005	S ±.016	T* +.010 –.000	V Thread Class 2A (Plated)	RR Thread Class 2A (Plated)	Z Size 16 & 20 Contacts	Z Size 22D Contacts
8	88/91-**569**751-XXX	.830	1.390	1.062	.453	.438	.473	1.250	.884	.4375-28 UNEF	.8750-20 UNEF	.272 – .200	.283 – .178
10	**752**-XXX	.955	1.515	1.188	.453	.438	.590	1.375	1.007	.5625-24 UNEF	1.0000-20 UNEF	.272 – .200	.283 – .178
12	**753**-XXX	1.084	1.640	1.312	.453	.438	.750	1.500	1.134	.6875-24 UNEF	1.1250-18 UNEF	.272 – .200	.283 – .178
14	**754**-XXX	1.208	1.765	1.438	.453	.438	.875	1.625	1.259	.8125-20 UNEF	1.2500-18 UNEF	.272 – .200	.283 – .178
16	**755**-XXX	1.333	1.953	1.562	.453	.438	1.000	1.781	1.384	.9375-20 UNEF	1.3750-18 UNEF	.272 – .200	.283 – .178
18	**756**-XXX	1.459	2.031	1.688	.453	.438	1.125	1.890	1.507	1.0625-18 UNEF	1.5000-18 UNEF	.272 – .200	.283 – .178
20	**757**-XXX	1.576	2.156	1.812	.422	.464	1.250	2.016	1.634	1.1875-18 UNEF	1.6250-18 UNEF	.272 – .200	.283 – .178
22	**758**-XXX	1.701	2.280	2.000	.422	.464	1.375	2.140	1.759	1.3125-18 UNEF	1.7500-18 UNS	.272 – .200	.283 – .178
24	**759**-XXX	1.826	2.405	2.125	.422	.464	1.500	2.265	1.884	1.4375-18 UNEF	1.8750-16 UN	.272 – .200	.283 – .178

All dimensions for reference only.
Z dimension is determined by contact type in the insert arrangement.
Most common options are shown; other options are available.

★ .059 dia. min. 3 lockwire holes.
Formed lockwire hole design (6 holes) is optional.
* "D" shaped mounting hole dimensions

Amphenol Aerospace

Series II JT

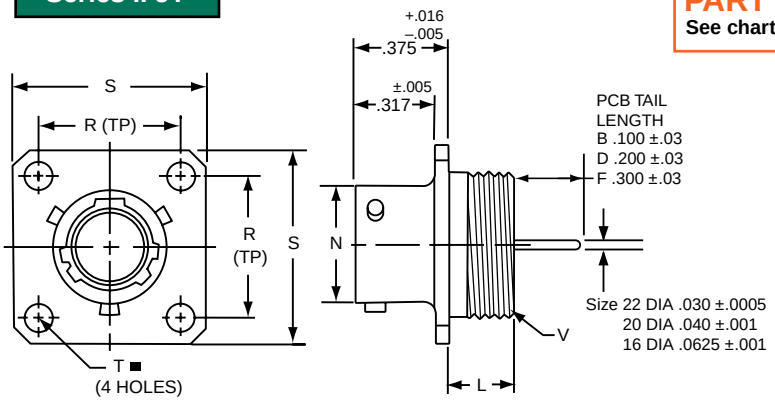

■ ⊕ .005 DIA Ⓜ

Shell Size	Part Number	L Max.	N +.001 −.005	R (TP)	S ±.016	T ±.005	V Thread Class 2A
8	10-626431-XXX	.234	.473	.594	.812	.120	.5625-24UNEF
10	432-XXX	.234	.590	.719	.938	.120	.6875-24UNEF
12	433-XXX	.234	.750	.812	1.031	.120	.8125-20UNEF
14	434-XXX	.234	.875	.906	1.125	.120	.9375-20UNEF
16	435-XXX	.234	1.000	.969	1.219	.120	1.0625-18UNEF
18	436-XXX	.234	1.125	1.062	1.312	.120	1.1875-18UNEF
20	437-XXX	.234	1.250	1.156	1.438	.120	1.3125-18UNEF
22	438-XXX	.234	1.375	1.250	1.562	.120	1.4375-18UNEF
24	439-XXX	.313	1.500	1.375	1.688	.147	1.5625-18UNEF

PART # See chart below

1. Base Number	2. Coded Shell Size	3. Insert Arrg.	4. Contact Type/Alt. Keying Positions	5. Shell Finish	6. Tail Length
10-626	431	-35	P	1	B

HOW TO ORDER

1. Base Number:

10-626	Base Number for MIL-DTL-38999 Series III Hermetic with PCB Tail

2. Select a Coded Shell Size:

See chart below 431-439, designates size 8-24 shell size

3. Select an Insert Arrangement:

Refer to insert availability chart on page 239 and pin-out illustrations on pages 241-255. In the chart the first number represents the Shell size and the second number is the insert Arrangement.

-35	Designates Insert Arrangement Number

4. Contact Type/Alternate Keying Positions:

Refer to page 240 for alternate rotation letters to use.

P	Designates Pin Contacts in Normal Position
S	Designates Socket Contacts in Normal Position

5. Select a Shell Finish:

1	Hermetic seal, passivated Stainless Steel, 200°C
2	Hermetic seal, Stainless Steel w/Nickel Plate

6. Select a Tail Length:

B	.100±.03
D	.200±.03
F	.300±.03

38999, Series II Hermetic – PCB Contacts

JT02 Box Mounting Receptacle

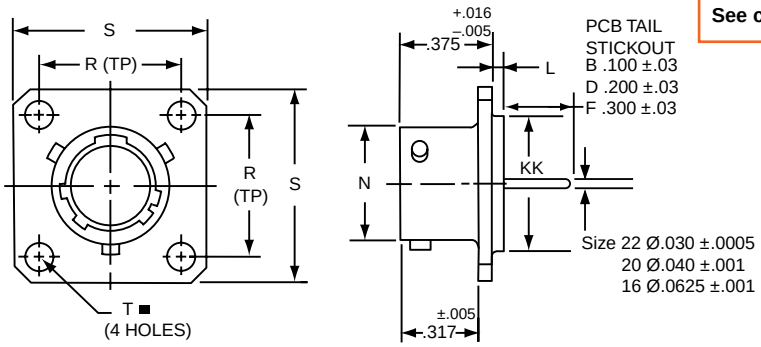

■ ⊕ .005 DIA Ⓜ

Shell Size	Part Number	L +.006 −.015	N +.001 −.005	R (TP)	S ±.016	T ±.005	KK +.001 −.005
8	10-626461-XXX	.051	.473	.594	.812	.120	.562
10	462-XXX	.051	.590	.719	.938	.120	.672
12	463-XXX	.051	.750	.812	1.031	.120	.781
14	464-XXX	.051	.875	.906	1.125	.120	.906
16	465-XXX	.051	1.000	.969	1.219	.120	1.031
18	466-XXX	.051	1.125	1.062	1.312	.120	1.156
20	467-XXX	.051	1.250	1.156	1.438	.120	1.250
22	468-XXX	.080	1.375	1.250	1.562	.120	1.375
24	469-XXX	.080	1.500	1.375	1.688	.147	1.500

All dimensions for reference only.

PART # See chart below

1. Base Number	2. Coded Shell Size	3. Insert Arrg.	4. Arrg Rotation	5. Shell Finish	6. Tail Length
10-626	461	-35	P	1	B

Follow HOW TO ORDER instructions above.

38999, Series II Hermetic – PCB Contacts

JT07 Jam Nut Receptacle

Series II JT

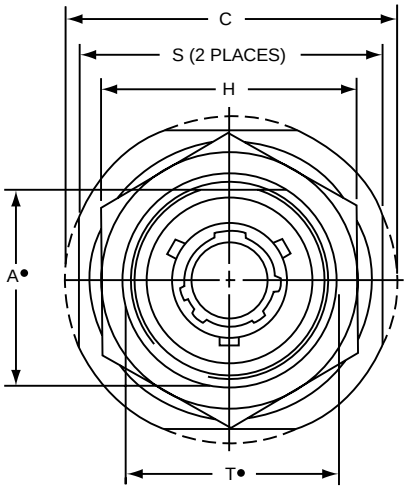

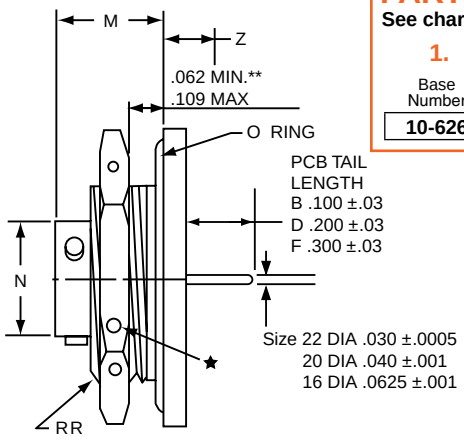

PART #
See chart below

1. Base Number	2. Coded Shell Size	3. Insert Arrg.	4. Contact Type/Alt. Keying Positions	5. Shell Finish	6. Tail Length
10-626	44 1	-35	P	1	B

Follow HOW TO ORDER instructions below.

Shell Size	Part Number	A• +.000 −.010	C Max.	H +.017 −.016	M ±.005	N +.001 −.005	S ±.016	T• +.010 −.000	Z Max.	RR Thread Class 2A
8	10-626441-XXX	.830	1.390	1.062	.438	.473	1.250	.884	.244	.8750-20UNEF
10	442-XXX	.955	1.515	1.188	.438	.590	1.375	1.007	.244	1.0000-20UNEF
12	443-XXX	1.084	1.640	1.312	.438	.750	1.500	1.134	.244	1.1250-18UNEF
14	444-XXX	1.208	1.765	1.438	.438	.875	1.625	1.259	.244	1.2500-18UNEF
16	445-XXX	1.333	1.953	1.562	.438	1.000	1.781	1.384	.244	1.3750-18UNEF
18	446-XXX	1.459	2.031	1.688	.438	1.125	1.890	1.507	.244	1.5000-18UNEF
20	447-XXX	1.576	2.156	1.812	.464	1.250	2.016	1.634	.218	1.6250-18UNEF
22	448-XXX	1.701	2.280	2.000	.464	1.375	2.140	1.759	.218	1.7500-18UNS
24	449-XXX	1.826	2.405	2.125	.464	1.500	2.265	1.884	.218	1.8750-16UN

★ .059 Dia. Min. 3 lockwire holes. Formed lockwire hole design (6 holes) is optional.

• "D" shaped mounting hole dimensions.

** Panel Thickness

All dimensions for reference only.

38999, Series II Hermetic, PCB Contacts

JTI Solder Mounting Receptacle

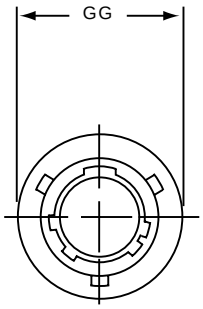

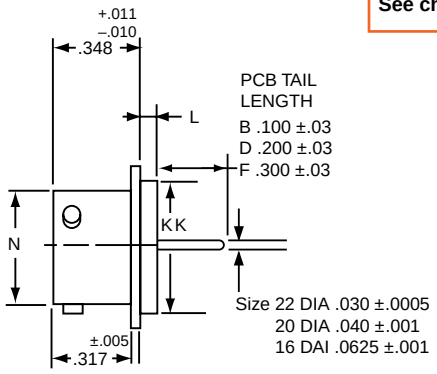

PART #
See chart below

1. Base Number	2. Coded Shell Size	3. Insert Arrg.	4. Contact Type/Alt. Keying Positions	5. Shell Finish	6. Tail Length
10-626	45 1	-35	P	1	B

Shell Size	Part Number	L +.011 −.010	N +.001 −.005	GG +.011 −.010	KK +.001 −.005
8	10-626451-XXX	.078	.473	.687	.562
10	452-XXX	.078	.590	.797	.672
12	453-XXX	.078	.750	.906	.781
14	454-XXX	.078	.875	1.031	.906
16	455-XXX	.078	1.000	1.156	1.031
18	456-XXX	.078	1.125	1.281	1.156
20	457-XXX	.078	1.250	1.375	1.250
22	458-XXX	.107	1.375	1.500	1.375
24	459-XXX	.107	1.500	1.625	1.500

All dimensions for reference only. Weld mounting hermetic receptacle also available. Consult Amphenol, Sidney, NY for availability and dimensions.

HOW TO ORDER

1. Base Number:

10-626	Base Number for MIL-DTL-38999 Series III Hermetic with PCB Tail

2. Select a Coded Shell Size:

See chart below 451-459, designates size 8-24 shell size

3. Select an Insert Arrangement:

Refer to insert availability chart on page 239 and pin-out illustrations on pages 241-255. In the chart the first number represents the Shell size and the second number is the insert Arrangement.

-35	Designates Insert Arrangement Number

4. Contact Type/Alternate Keying Positions:

Refer to page 240 for alternate rotation letters to use.

P	Designates Pin Contacts in Normal Position
S	Designates Socket Contacts in Normal Position

5. Select a Shell Finish:

1	Hermetic seal, passivated Stainless Steel, 200°C
2	Hermetic seal, Stainless Steel w/Nickel Plate

6. Select a Tail Length:

B	.100±.03
D	.200±.03
F	.300±.03

(Back Panel Mounting)

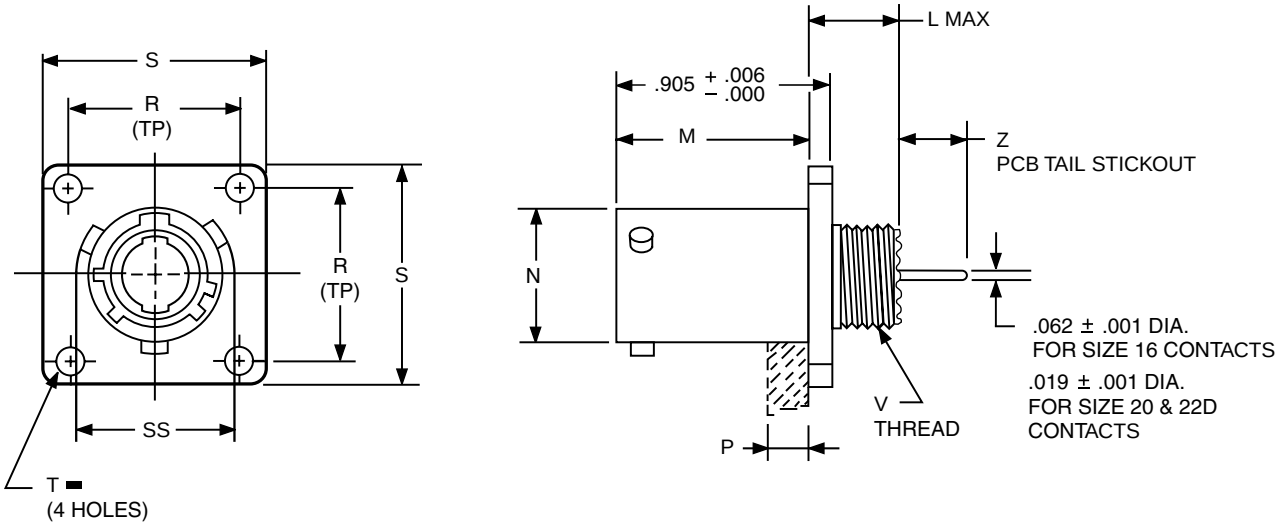

PART #	1. Shell Finish	2. Base Number	3. Coded Shell Size	4. Insert Arrangement	5. Contact Type/Alt. Keying Positions
See chart below	88/91	569	701	- 35	P

HOW TO ORDER

1. Select a Shell Finish:

88	Designates olive drab cadmium plated connector shell
91	Designates electroless nickel plated connector shell

2. Base Number:

569	Base Number

3. Select a Coded Shell Size:

See chart below 701-709, designates size 9-25 shell size.
Example: 701= Size 9 Shell

4. Select an Insert Arrangement:

Refer to insert availability chart on page 239 and pin-out illustrations on pages 241-255. In the chart the first number represents the Shell size and the second number is the insert Arrangement.

-35	Designates Insert Arrangement Number

5. Contact Type/Alternate Keying Positions:

Refer to page 240 for alternate rotation letters to use.

P	Designates Pin Contacts in Normal Position
S	Designates Socket Contacts in Normal Position

▬ ⊕ .005 DIA Ⓜ

Shell Size	Part Number	L Max.	M +.000 –.005	N Dia.	P Max. Panel Thickness	R (TP)	S +.011 –.010	T Dia. ±.005	V Thread Class 2A (Plated)	SS Dia. +.000 –.016	Z Size 16 & 20 Contacts	Z Size 22D Contacts
9	88/91-**569**701-XXX	.453	.820	.572	.234	.719	.938	.128	.4375-28 UNEF	.662	.281 – .235	.249 – .188
11	**702**-XXX	.453	.820	.700	.234	.812	1.031	.128	.5625-24 UNEF	.810	.281 – .235	.249 – .188
13	**703**-XXX	.453	.820	.850	.234	.906	1.125	.128	.6875-24 UNEF	.960	.281 – .235	.249 – .188
15	**704**-XXX	.453	.820	.975	.234	.969	1.219	.128	.8125-20 UNEF	1.085	.281 – .235	.249 – .188
17	**705**-XXX	.453	.820	1.100	.234	1.062	1.312	.128	.9375-20 UNEF	1.210	.281 – .235	.249 – .188
19	**706**-XXX	.453	.820	1.207	.234	1.156	1.438	.128	1.0625-18 UNEF	1.317	.281 – .235	.249 – .188
21	**707**-XXX	.484	.790	1.332	.204	1.250	1.562	.128	1.1875-18 UNEF	1.442	.281 – .235	.249 – .188
23	**708**-XXX	.484	.790	1.457	.204	1.375	1.688	.147	1.3125-18 UNEF	1.567	.281 – .235	.249 – .188
25	**709**-XXX	.484	.790	1.582	.193	1.500	1.812	.147	1.4375-18 UNEF	1.692	.281 – .235	.249 – .188

All dimensions for reference only.
Z dimension is determined by contact type in the insert arrangement.
Most common options are shown; other options are available.

Series I LJT

(Back Panel Mounting) (With Clinch Nuts)

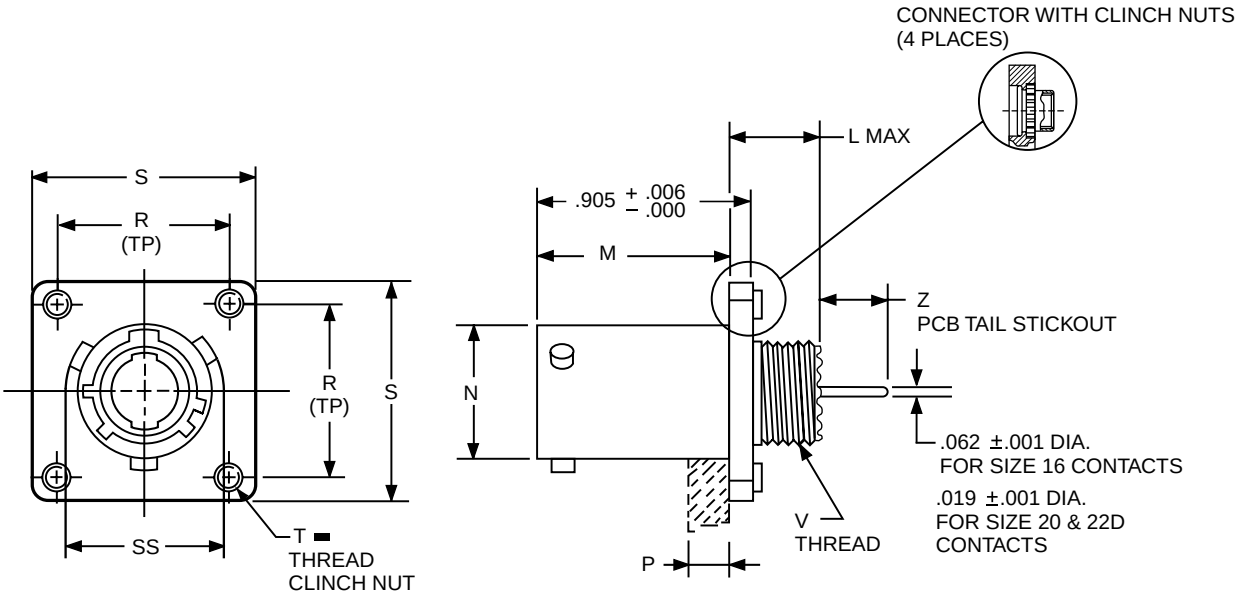

	1.	2.	3.	4.	5.
PART # See chart below	Shell Finish	Base Number	Coded Shell Size	Insert Arrangement	Contact Type/Alt. Keying Positions
	88/91	**628**	**701**	- 35	P

HOW TO ORDER

1. Select a Shell Finish:

88	Designates olive drab cadmium plated connector shell
91	Designates electroless nickel plated connector shell

2. Base Number:

628	Base Number

3. Select a Coded Shell Size:

See chart below **701-709**, designates size 9-25 shell size.
Example: **701**= Size 9 Shell

4. Select an Insert Arrangement:

Refer to insert availability chart on page 239 and pin-out illustrations on pages 241-255. First number represents the Shell size and the second number is the insert Arrangement.

-35	Designates Insert Arrangement Number

5. Contact Type/Alternate Keying Positions:

Refer to page 240 for alternate rotation letters to use.

P	Designates Pin Contacts in Normal Position
S	Designates Socket Contacts in Normal Position

▬ Ⓣ .005 DIA Ⓜ

Shell Size	Part Number with Clinch Nuts*	L Max.	M +.000 –.005	N Dia.	P Max. Panel Thickness	R (TP)	S +.011 –.010	T Thread	V Thread Class 2A (Plated)	SS Dia. +.000 –.016	Z	
											Size 16 & 20 Contacts	Size 22D Contacts
9	88/91-**628**701-XXX	.453	.820	.572	.234	.719	.938	.112-40UNJC-3B	.4375-28 UNEF	.662	.281 – .235	.249 – .188
11	**702**-XXX	.453	.820	.700	.234	.812	1.031	.112-40UNJC-3B	.5625-24 UNEF	.810	.281 – .235	.249 – .188
13	**703**-XXX	.453	.820	.850	.234	.906	1.125	.112-40UNJC-3B	.6875-24 UNEF	.960	.281 – .235	.249 – .188
15	**704**-XXX	.453	.820	.975	.234	.969	1.219	.112-40UNJC-3B	.8125-20 UNEF	1.085	.281 – .235	.249 – .188
17	**705**-XXX	.453	.820	1.100	.234	1.062	1.312	.112-40UNJC-3B	.9375-20 UNEF	1.210	.281 – .235	.249 – .188
19	**706**-XXX	.453	.820	1.207	.234	1.156	1.438	.112-40UNJC-3B	1.0625-18 UNEF	1.317	.281 – .235	.249 – .188
21	**707**-XXX	.484	.790	1.332	.204	1.250	1.562	.112-40UNJC-3B	1.1875-18 UNEF	1.442	.281 – .235	.249 – .188
23	**708**-XXX	.484	.790	1.457	.204	1.375	1.688	.138-32UNJC-3B	1.3125-18 UNEF	1.567	.281 – .235	.249 – .188
25	**709**-XXX	.484	.790	1.582	.193	1.500	1.812	.138-32UNJC-3B	1.4375-18 UNEF	1.692	.281 – .235	.249 – .188

All dimensions for reference only.
*Consult Amphenol for more information on ordering connectors with clinch nuts. There is also a 3mm clinch nut available (part number 88/91-628401/409)
Z dimension is determined by contact type in the insert arrangement.
Most common options are shown; other options are available.

(Back Panel Mounting)

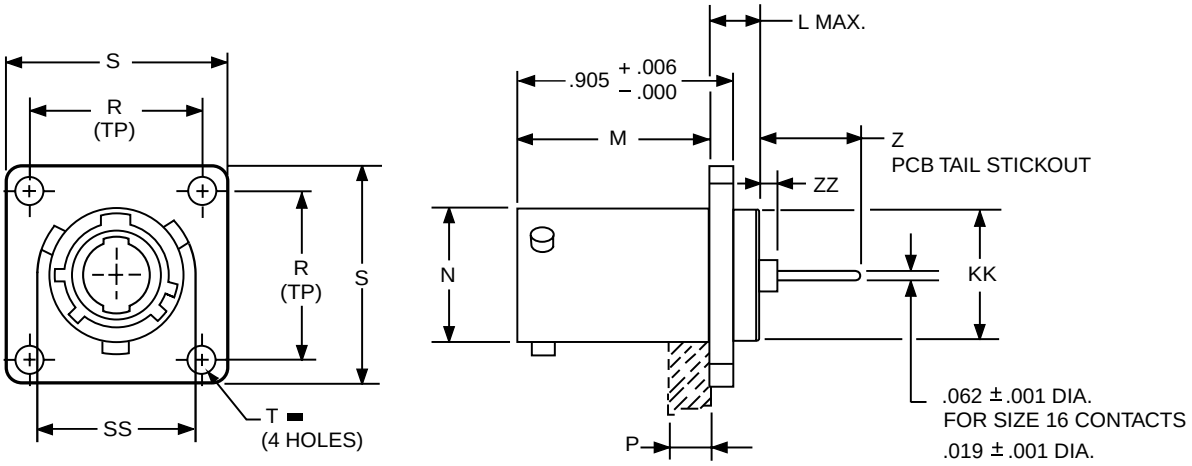

ZZ	
Pins	
12	.176/.115
16	.044/-.007
20	.161/.100
22D	.092/.031
Sockets	
12	.176/.112
16	.092/.038
20	.161/.097
22D	.200/.129

	1.	2.	3.	4.	5.
PART #	Shell Finish	Base Number	Coded Shell Size	Insert Arrangement	Contact Type/Alt. Keying Positions
See chart below	**88/91**	**569**	**711**	**-35**	**P**

HOW TO ORDER

1. Select a Shell Finish:

88	Designates olive drab cadmium plated connector shell
91	Designates electroless nickel plated connector shell

2. Base Number:

569	Base Number

3. Select a Coded Shell Size:

See chart below **711-719**, designates size 9-25 shell size.
Example: **711**= Size 9 Shell

4. Select an Insert Arrangement:

Refer to insert availability chart on page 239 and pin-out illustrations on pages 241-255. In the chart the first number represents the Shell size and the second number is the insert Arrangement.

-35	Designates Insert Arrangement Number

5. Contact Type/Alternate Keying Positions:

Refer to page 240 for alternate rotation letters to use.

P	Designates Pin Contacts in Normal Position
S	Designates Socket Contacts in Normal Position

▬ Ⓣ .005 DIA Ⓜ

Shell Size	Part Number	L Max.	M +.000 –.005	N +.001 –.005	P Max. Panel Thickness	R (TP)	S +.011 –.010	T Dia. ±.005	KK Dia. +.006 –.005	SS Dia. +.000 –.016	Z	
											Size 16 & 20 Contacts	Size 22D Contacts
9	88/91-**569**711-XXX	.203	.820	.572	.234	.719	.938	.128	.433	.662	.454 – .401	.468 – .406
11	**712**-XXX	.203	.820	.700	.234	.812	1.031	.128	.557	.810	.454 – .401	.468 – .406
13	**713**-XXX	.203	.820	.850	.234	.906	1.125	.128	.676	.960	.454 – .401	.468 – .406
15	**714**-XXX	.203	.820	.975	.234	.969	1.219	.128	.801	1.085	.454 – .401	.468 – .406
17	**715**-XXX	.203	.820	1.100	.234	1.062	1.312	.128	.926	1.210	.454 – .401	.468 – .406
19	**716**-XXX	.203	.820	1.207	.234	1.156	1.438	.128	1.032	1.317	.454 – .401	.468 – .406
21	**717**-XXX	.234	.790	1.332	.204	1.250	1.562	.128	1.157	1.442	.454 – .401	.468 – .406
23	**718**-XXX	.234	.790	1.457	.204	1.375	1.688	.147	1.282	1.567	.454 – .401	.468 – .406
25	**719**-XXX	.234	.790	1.582	.193	1.500	1.812	.147	1.407	1.692	.454 – .401	.468 – .406

All dimensions for reference only.
Z dimension is determined by contact type in the insert arrangement.
Most common options are shown; other options are available.

(Back Panel Mounting) (With Clinch Nuts)

Series I LJT

ZZ	
Pins	
12	.176/.115
16	.044/-.007
20	.161/.100
22D	.092/.031
Sockets	
12	.176/.112
16	.092/.038
20	.161/.097
22D	.200/.129

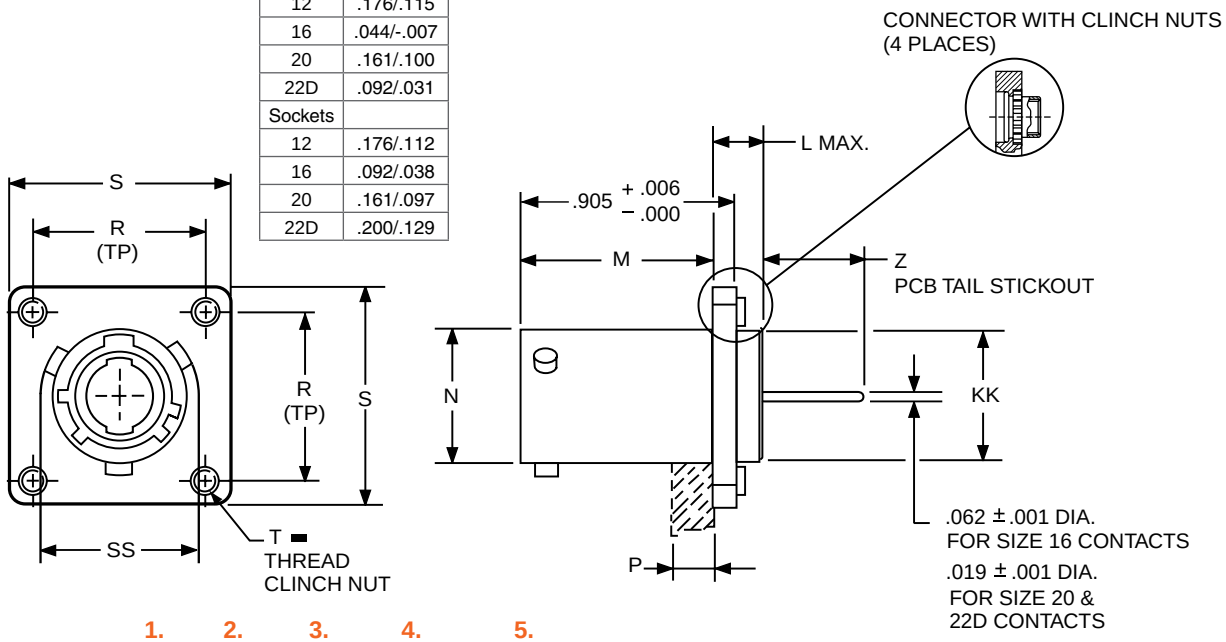

	1.	2.	3.	4.	5.
PART #	Shell Finish	Base Number	Coded Shell Size	Insert Arrangement	Contact Type/Alt. Keying Positions
See chart below	**88/91**	**628**	**71**1	- 35	P

HOW TO ORDER

1. Select a Shell Finish:

88	Designates olive drab cadmium plated connector shell
91	Designates electroless nickel plated connector shell

2. Base Number:

628	Base Number

3. Select a Coded Shell Size:

See chart below **711-719**, designates size 9-25 shell size.
Example: **711**= Size 9 Shell

4. Select an Insert Arrangement:

Refer to insert availability chart on page 239 and pin-out illustrations on pages 241-255. In the chart the first number represents the Shell size and the second number is the insert Arrangement.

-35	Designates Insert Arrangement Number

5. Contact Type/Alternate Keying Positions:

Refer to page 240 for alternate rotation letters to use.

P	Designates Pin Contacts in Normal Position
S	Designates Socket Contacts in Normal Position

▬ Ⓟ .005 DIA Ⓜ

Shell Size	Part Number with Clinch Nuts	L Max.	M +.000 −.005	N +.001 −.005	P Max. Panel Thickness	R (TP)	S +.011 −.010	T Thread	KK Dia. +.006 −.005	SS Dia. +.000 −.016	Z Size 16 & 20 Contacts	Z Size 22D Contacts
9	88/91-**628**711-XXX	.203	.820	.572	.234	.719	1.031	.112-40UNJC-3B	.433	.662	.454 – .401	.468 – .406
11	**712**-XXX	.203	.820	.700	.234	.812	1.125	.112-40UNJC-3B	.557	.810	.454 – .401	.468 – .406
13	**713**-XXX	.203	.820	.850	.234	.906	1.172	.112-40UNJC-3B	.676	.960	.454 – .401	.468 – .406
15	**714**-XXX	.203	.820	.975	.234	.969	1.281	.112-40UNJC-3B	.801	1.085	.454 – .401	.468 – .406
17	**715**-XXX	.203	.820	1.100	.234	1.062	1.375	.112-40UNJC-3B	.926	1.210	.454 – .401	.468 – .406
19	**716**-XXX	.203	.820	1.207	.234	1.156	1.469	.112-40UNJC-3B	1.032	1.317	.454 – .401	.468 – .406
21	**717**-XXX	.234	.790	1.332	.204	1.250	1.625	.112-40UNJC-3B	1.157	1.442	.454 – .401	.468 – .406
23	**718**-XXX	.234	.790	1.457	.204	1.375	1.750	.138-32UNJC-3B	1.282	1.567	.454 – .401	.468 – .406
25	**719**-XXX	.234	.790	1.582	.193	1.500	1.875	.138-32UNJC-3B	1.407	1.692	.454 – .401	.468 – .406

All dimensions for reference only.
*Consult Amphenol for more information on ordering connectors with clinch nuts. There is also a 3mm clinch nut available (part number 88/91-628410/419)
Z dimension is determined by contact type in the insert arrangement.
Most common options are shown; other options are available.

Amphenol Aerospace

Series I LJT

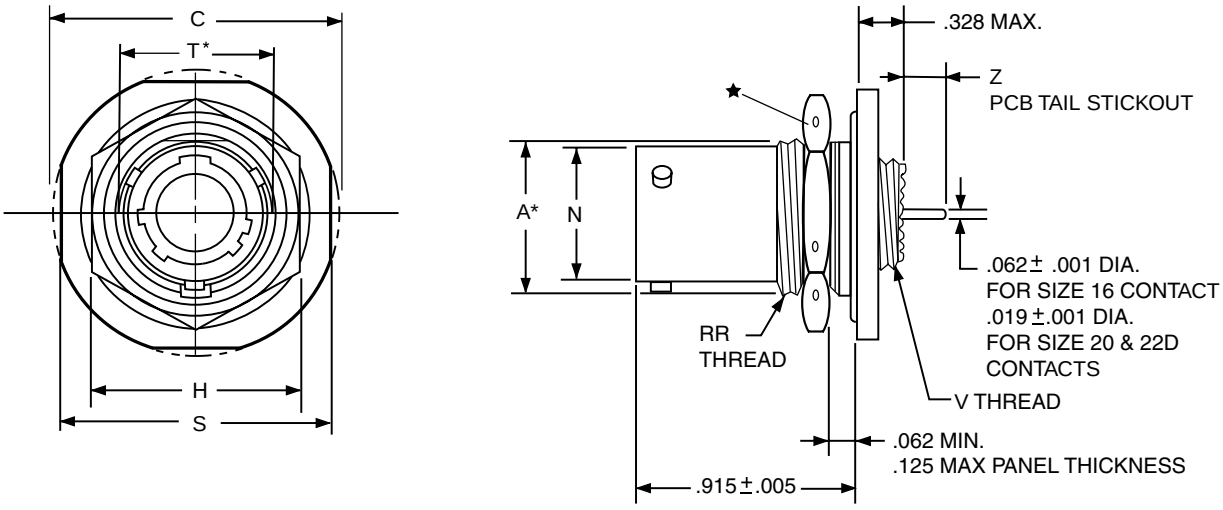

PART # See chart below	1. Shell Finish	2. Base Number	3. Coded Shell Size	4. Insert Arrangement	5. Contact Type/Alt. Keying Positions
	88/91	569	721	-35	P

HOW TO ORDER

1. Select a Shell Finish:

88	Designates olive drab cadmium plated connector shell
91	Designates electroless nickel plated connector shell

2. Base Number:

569	Base Number

3. Select a Coded Shell Size:

See chart below **721-729**, designates size 9-25 shell size.
Example: **721**= Size 9 Shell

4. Select an Insert Arrangement:

Refer to insert availability chart on page 239 and pin-out illustrations on pages 241-255. In the chart the first number represents the Shell size and the second number is the insert Arrangement.

-35	Designates Insert Arrangement Number

5. Contact Type/Alternate Keying Positions:

Refer to page 240 for alternate rotation letters to use.

P	Designates Pin Contacts in Normal Position
S	Designates Socket Contacts in Normal Position

Shell Size	Part Number	A* +.000 –.010	C Max.	H Hex +.017 –.016	L Max.	N +.001 –.005	S ±.016	T* +.010 –.000	V Thread Class 2A (Plated)	RR Thread Class 2A (Plated)	Z Size 16 & 20 Contacts	Z Size 22D Contacts
9	88/91-**569**721-XXX	.669	1.199	.875	.625	.572	1.062	.697	.4375-28 UNEF	.6875-24 UNEF	.229 – .175	.243 – .182
11	**722**-XXX	.769	1.386	1.000	.625	.700	1.250	.822	.5625-24 UNEF	.8125-20 UNEF	.229 – .175	.243 – .182
13	**723**-XXX	.955	1.511	1.188	.625	.850	1.375	1.007	.6875-24 UNEF	1.0000-20 UNEF	.229 – .175	.243 – .182
15	**724**-XXX	1.084	1.636	1.312	.625	.975	1.500	1.134	.8125-20 UNEF	1.1250-18 UNEF	.229 – .175	.243 – .182
17	**725**-XXX	1.208	1.761	1.438	.625	1.100	1.625	1.259	.9375-20 UNEF	1.2500-18 UNEF	.229 – .175	.243 – .182
19	**726**-XXX	1.333	1.949	1.562	.656	1.207	1.812	1.384	1.0625-18 UNEF	1.3750-18 UNEF	.207 – .158	.221 – .165
21	**727**-XXX	1.459	2.073	1.688	.750	1.332	1.938	1.507	1.1875-18 UNEF	1.5000-18 UNEF	.207 – .158	.221 – .165
23	**728**-XXX	1.580	2.199	1.812	.750	1.457	2.062	1.634	1.3125-18 UNEF	1.6250-18 UNEF	.207 – .158	.221 – .165
25	**729**-XXX	1.709	2.323	2.000	.750	1.582	2.188	1.759	1.4375-18 UNEF	1.7500-18 UNS	.207 – .158	.221 – .165

All dimensions for reference only.
Z dimension is determined by contact type in the insert arrangement.
Most common options are shown; other options are available.

★ .059 dia. min. 3 lockwire holes.
Formed lockwire hole design (6 holes) is optional.
* "D" shaped mounting hole dimensions

Series I LJT

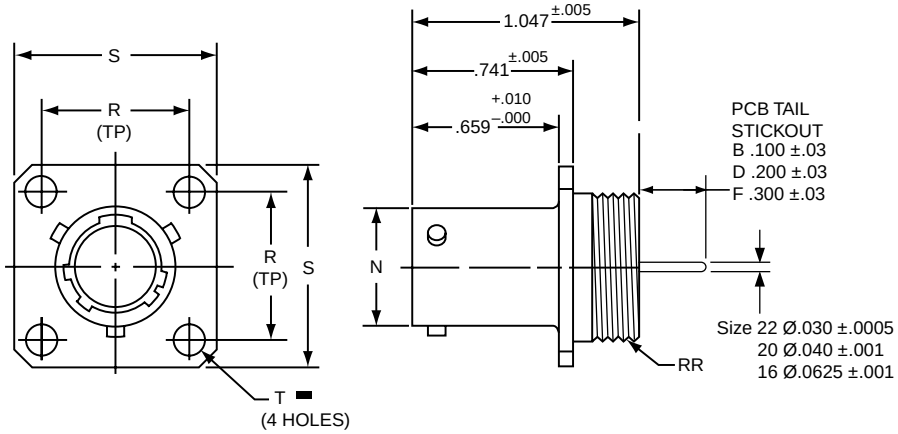

PART # See chart below	1. Base Number	2. Coded Shell Size	3. Contact Type/Alt. Keying Positions	4. Shell Finish	5. Tail Length
	10-626	401	P	1	B

HOW TO ORDER

1. Base Number:

10-626	Base Number for MIL-DTL-38999 Series III Hermetic with PCB Tail

2. Select a Coded Shell Size:

See chart below **401-409**, designates size 9-25 shell size

3. Contact Type/Alternate Keying Positions:

Refer to page 240 for alternate rotation letters to use.

P	Designates Pin Contacts in Normal Position
S	Designates Socket Contacts in Normal Position

4. Select a Shell Finish:

1	Hermetic seal, passivated Stainless Steel, 200°C
2	Hermetic seal, Stainless Steel w/Nickel Plate

5. Select a Tail Length:

B	.100±.03
D	.200±.03
F	.300±.03

■ ⌖ .005 DIA Ⓜ

Shell Size	Part Number	N Dia. +.001 –.005	R (TP)	S ±.016	T Dia. ±.005	RR Thread Class 2A
9	**10-626401**-XXX	.572	.719	.938	.128	.6875-24 UNEF
11	**402**-XXX	.700	.812	1.031	.128	.8125-20 UNEF
13	**403**-XXX	.850	.906	1.125	.128	.9375-20 UNEF
15	**404**-XXX	.975	.969	1.219	.128	1.0625-18 UNEF
17	**405**-XXX	1.100	1.062	1.312	.128	1.1875-18 UNEF
19	**406**-XXX	1.207	1.156	1.438	.128	1.3125-18 UNEF
21	**407**-XXX	1.332	1.250	1.562	.128	1.4375-18 UNEF
23	**408**-XXX	1.457	1.375	1.688	.147	1.5625-18 UNEF
25	**409**-XXX	1.582	1.500	1.812	.147	1.6875-18 UNEF

All dimensions for reference only.

Amphenol Aerospace

Series I LJT

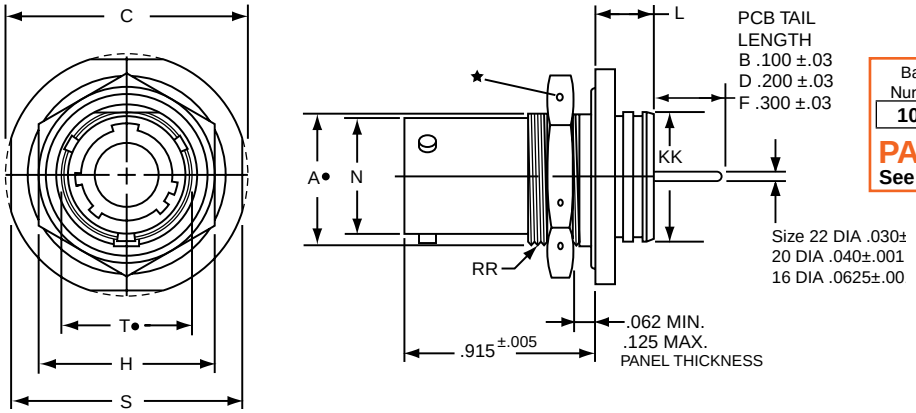

1. Base Number	2. Coded Shell Size	3. Contact Type/Alt. Keying Positions	4. Shell Finish	5. Tail Length
10-626	41	P	1	B

PART # See chart below — Follow HOW TO ORDER instructions below

Shell Size	Part Number	A• +.000 –.010	C Max.	H Hex +.017 –.016	L Max.	N +.000 –.005	S ±.016	T• +.010 –.000	KK +.011 –.000	RR Thread Class 2A (Plated)
9	10-626411-XXX	.669	1.199	.875	.297	.572	1.062	.697	.642	.6875-24 UNEF
11	412-XXX	.769	1.386	1.000	.297	.700	1.250	.822	.766	.8125-20 UNEF
13	413-XXX	.955	1.511	1.188	.297	.850	1.375	1.007	.892	1.0000-20 UNEF
15	414-XXX	1.084	1.636	1.312	.297	.975	1.500	1.134	1.018	1.1250-18 UNEF
17	415-XXX	1.208	1.761	1.438	.297	1.100	1.625	1.259	1.142	1.2500-18 UNEF
19	416-XXX	1.333	1.949	1.562	.328	1.207	1.812	1.384	1.268	1.3750-18 UNEF
21	417-XXX	1.459	2.073	1.688	.328	1.332	1.938	1.507	1.392	1.5000-18 UNEF
23	418-XXX	1.580	2.199	1.812	.328	1.457	2.062	1.634	1.518	1.6250-18 UNEF
25	419-XXX	1.709	2.328	2.000	.328	1.582	2.188	1.759	1.642	1.7500-18 UNS

All dimensions for reference only.

38999, Series I Hermetic – PCB Contacts

LJTI Solder Mounting Receptacle

1. Base Number	2. Coded Shell Size	3. Contact Type/Alt. Keying Positions	4. Shell Finish	5. Tail Length
10-626	42	P	1	B

PART # See chart below

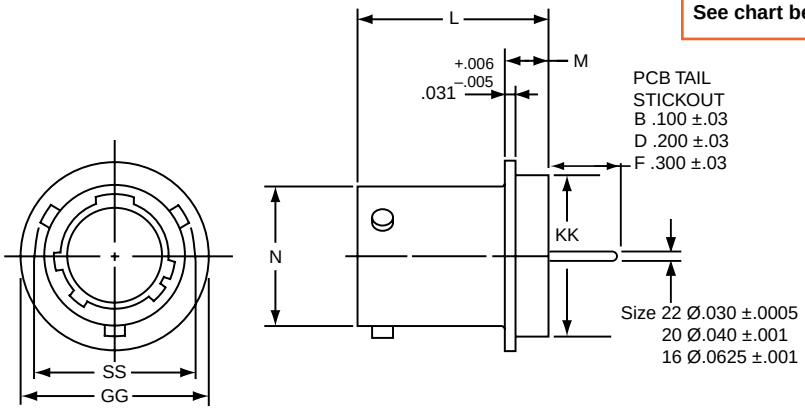

Shell Size	Part Number	N Dia. +.001 –.005	SS Dia. +.000 –.016	L +.011 –.000	M +.006 –.005	GG Dia. +.011 –.010	KK Dia. +.001 –.005
9	10-626421-XXX	.572	.662	.789	.125	.750	.672
11	422-XXX	.700	.810	.789	.125	.844	.781
13	423-XXX	.850	.960	.789	.125	.969	.906
15	424-XXX	.975	1.085	.789	.125	1.094	1.031
17	425-XXX	1.100	1.210	.789	.125	1.218	1.156
19	426-XXX	1.207	1.317	.789	.125	1.312	1.250
21	427-XXX	1.332	1.442	.789	.125	1.438	1.375
23	428-XXX	1.457	1.567	.821	.156	1.563	1.500
25	429-XXX	1.582	1.692	.821	.156	1.688	1.625

HOW TO ORDER

1. Base Number:

10-626	Base Number for MIL-DTL-38999 Series III Hermetic with PCB Tail

2. Select a Coded Shell Size:

See chart below **421-429**, designates size 9-25 shell size

3. Contact Type/Alt. Keying Positions:

Refer to page 240 for alternate rotation letters to use.

P	Designates Pin Contacts in Normal Position
S	Designates Socket Contacts in Normal Position

4. Select a Shell Material

1	Hermetic seal, passivated Stainless Steel, 200°C
2	Hermetic seal, Stainless Steel w/Nickel Plate

5. Select a Tail Length:

B	.100±.03
D	.200±.03
F	.300±.03

All dimensions for reference only.
Weld mounting hermetic receptacle also available.
Consult Amphenol, Sidney, NY for availability and dimensions.

Stand-off Adapter for use with 38999 PCB Connectors

Series III TV | **Series II JT** | **Series I LJT**

Amphenol's stand-off adapter and spanner nut assembly allows any MIL-DTL-38999 jam nut receptacle to support PCB contacts and may eliminate the need for special stand-off shell design. Consult Amphenol for more information.

Tri-Start MIL-DTL-38999 Jam Nut Connector with Stand-off Adapter

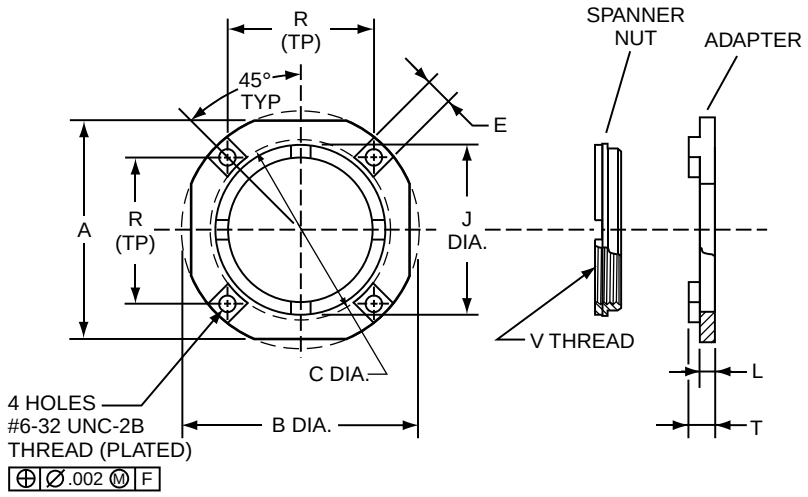

FINISH DATA**	
Suffix Designation	**Description**
9	**Olive drab cadmium plate, nickel base plate**
G	Electroless nickel plate
None	Passivated Stainless Steel
8	Nickel Plated

** Other finishes available; consult Amphenol for further information.

- HOW TO ORDER
- Order by applicable 10- part number in table below. Last digit designates finish - see finish table.

Shell Size	Part Number	A ± .003	B Dia. ± .003	C Dia. +.005 −.001	E ±.005	J Dia. +.005 −.000	L ±.003	R (TP)	T* ±.002	V Thread Metric Plated
9	10-658266-01( )	1.062	1.188	.750	.200	.625	.150	.688	.325	M12 X 1-6H
11	10-658266-02( )	1.250	1.375	.900	.200	.744	.150	.813	.325	M15 X 1-6H
13	10-658266-03( )	1.375	1.500	.975	.200	.862	.150	.860	.325	M18 X 1-6H
15	10-658266-04( )	1.500	1.625	1.125	.200	1.019	.150	.968	.325	M22 X 1-6H
17	10-658266-05( )	1.625	1.750	1.250	.200	1.137	.150	1.062	.325	M25 X 1-6H
19	10-658266-06( )	1.812	1.938	1.375	.200	1.255	.150	1.188	.325	M28 X 1-6H
21	10-658266-07( )	1.938	2.062	1.469	.200	1.373	.150	1.250	.325	M31 X 1-6H
23	10-658266-08( )	2.062	2.188	1.625	.200	1.492	.150	1.344	.325	M34 X 1-6H
25	10-658266-09( )	2.188	2.312	1.750	.200	1.610	.150	1.438	.325	M37 X 1-6H
9	10-658266-10( )	1.062	1.188	.750	.200	.625	.150	.688	.362	M12 X 1-6H
11	10-658266-11( )	1.250	1.375	.900	.200	.744	.150	.813	.362	M15 X 1-6H
13	10-658266-12( )	1.375	1.500	.975	.200	.862	.150	.860	.362	M18 X 1-6H
15	10-658266-13( )	1.500	1.625	1.125	.200	1.019	.150	.968	.362	M22 X 1-6H
17	10-658266-14( )	1.625	1.750	1.250	.200	1.137	.150	1.062	.362	M25 X 1-6H
19	10-658266-15( )	1.812	1.938	1.375	.200	1.255	.150	1.188	.362	M28 X 1-6H
21	10-658266-16( )	1.938	2.062	1.469	.200	1.373	.150	1.250	.362	M31 X 1-6H
23	10-658266-17( )	2.062	2.188	1.625	.200	1.492	.150	1.344	.362	M34 X 1-6H
25	10-658266-18( )	2.188	2.312	1.750	.200	1.610	.150	1.438	.362	M37 X 1-6H

All dimensions for reference only.
* For information on additional 'T' dimension lengths, consult Amphenol.
Consult Amphenol Aerospace in Sidney, NY for stainless steel availability & part numbers.

Amphenol
EMI/EMP Filter Protection

New Featured

Planar Array Assembly

Capacitor and MOV Planars

Diode Contacts

TABLE OF CONTENTS

EMI/EMP Filter Protection Connectors - For Protection of Sensitive Circuits

- Table of Contents . . . 277
- Filter Product Overview, Advantages . . . 278
- EMI Capabilities . . . 279, 280
- Filter Connector Options/Selection Data . . . 281, 282
- Effect of Temperature on EMI Filter, Filter Attenuation Curves . . . 283
- Impedance Matching Formula . . . 284
- Quality Assurance Testing . . . 285
- How to Order . . . 286-289
- Filter connectors with High Density Patterns . . . 289

Filter Connector Shell Styles:

- Filter MIL-DTL-38999, Series III - FTV Aluminum / FCTV Composite . . . 290
  - Composite Shell Styles FCTV . . . 291-294
  - Aluminum Shell Styles FTV . . . 295-300
- Filter MIL-DTL-38999, Series II - FJT Aluminum . . . 301-307
- Filter MIL-DTL-38999, Series I - FLJT Aluminum . . . 308-317
- Filter SJT Series (MIL-DTL-38999 type) - FSJT Aluminum . . . 318-321
- Filter MIL-DTL-38999 Series IV - FBL Aluminum . . . 322, 323
- Filter MIL-DTL-26482/MIL-DTL-83723 - FPT Aluminum . . . 324-329
- Filter "AN" Series, MIL-DTL-5015 - FAN Aluminum . . . 330, 331
- Filter Adapters . . . 332
- Transient Protection MOV (Metal Oxide Varistor) Connectors . . . 333, 334
- Transient Protection Diode Connectors . . . 335, 336
- Transient Protection ESA (Energy Shunting Assembly) Connectors . . . 337
- EMI/Transient Protection Specials . . . 338

EMI/EMP Filter Connector Typical Markets:

- Military & Commercial Aviation
- Military Vehicles
- Missiles & Ordnance
- Space & Satellites
- C4ISR

Amphenol Aerospace

EMI/EMP Filter Protection Connectors

For Protection of Sensitive Circuits

Amphenol® EMI/EMP Protection Connectors offer the versatility of standard connectors with EMI/EMP protection for sensitive circuits. Internal housing of the EMI/EMP devices eliminates costly and bulky exterior discrete protection devices.

Virtually all major MIL-Spec circulars can be incorporated with filter devices:

- MIL-DTL-38999
- MIL-DTL-26482
- MIL-DTL-83723
- MIL-DTL-5015
- MIL-DTL-27599
- MIL-DTL-26500

Amphenol offers filter connectors that include:

- EMP protection using diodes
- EMP protection utilizing metal oxide varistors (MOV's)
- Filtered plug connectors
- Filtered hermetic connectors
- Filter connectors with ESD protection
- EMI & EMP Protected Connectors
- Combinations of filtering devices within one connector package

This catalog focuses on the cylindrical connector offerings from Amphenol with EMI/EMP filter transient protection. There are also many rectangular filter connectors that are offered by Amphenol which include:

- MIL-DTL-24308 D-Sub
- MIL-DTL-83513 Micro D
- ARINC 404/600
- DOD-83527 Rack and Panel
- MIL-DTL-83733 Rack and Panel

Rectangular filter interconnects are manufactured and supplied by Amphenol Canada (www.amphenolcanada.com).

Advantages of Filter Connectors:

- Reduction in overall weight and space with the elimination of external filter circuits
- Reduction of solder junctions
- Increase in reliability due to fewer connections
- Fragile filter elements protected from handling and environmental damage
- Pre-testing from factory and ready for installation

FTV
Subminiature Tri-Start, MIL-DTL-38999 Series III, Metal or Composite shells with Filter Protection.

FLJT
Subminiature LJT, MIL-DTL-38999 Series I with Filter Protection.

Filter AN Connector
MIL-DTL-5015 Type Connectors with Filter Protection.
See Catalog 12-120

FJT
Subminiature JT, MIL-DTL-38999 Series II with Filter Protection.

FCTV with Stand-off Flange
Filtered Tri-Start connectors with composite shells for attachment to printed circuit boards.

FPT
Miniature MIL-DTL-26482 Series I with Filter Protection.
See Catalog 12-120

Filter Contacts Combined with High Speed Contacts
Filter Connectors can incorporate high frequency coax, twinax, triax, quadrax and differential twinax contacts.

MOV Connectors
MOV's act as a variable resistor to efficiently dissipate energy. MOV can be packaged singularly or in combinations with other EMI

Header Assemblies
Allow for easy separation and easy termination of connectors when attaching to flex or printed circuit boards. Allow for electrical testing that would adversely affect sensitive diodes, MOV's or filter capacitors.

The Amphenol® EMI filter connector utilizes two manufacturing technologies to provide the user with the most cost effective performance across the frequency range. (For EMP performance data, see pages 332-336).

The tubular design offers over 40 years of proven field reliability. All filter contacts within the connector share a common ground plane, which is connected to the connector shell. The pin to pin isolation is 85 dB minimum at 100 MHz. The planar design joins pins to a multi-layered ceramic, forming an array sub-assembly with a peripheral ground. This is connected to the connector shell via a ground spring. Pin to pin capacitance is less than 50 pf with a pin-to-pin isolation of 85 dB minimum at 100 MHz. Filter contacts for both designs contain either a pi passive element network comprised of a ferrite inductor and ceramic capacitor, or a single capacitor.

For planar designs, other filter networks are available, ie. T Type, L-C Type, C-L Type and C Type. An encapsulant of oven-cured epoxy in the rear provides:

- Mechanical and thermal insulation of the ceramic elements – mechanical loading can be accomplished without capacitor damage. Pins can be bent 90° and straightened with no damage to the filter.
- Hermeticity (4.6 x 10^{-3} cc/sec) – prevents water from entering through the rear of the connector in high humidity environments. Amphenol recommends using metal protection caps during cleaning operations.

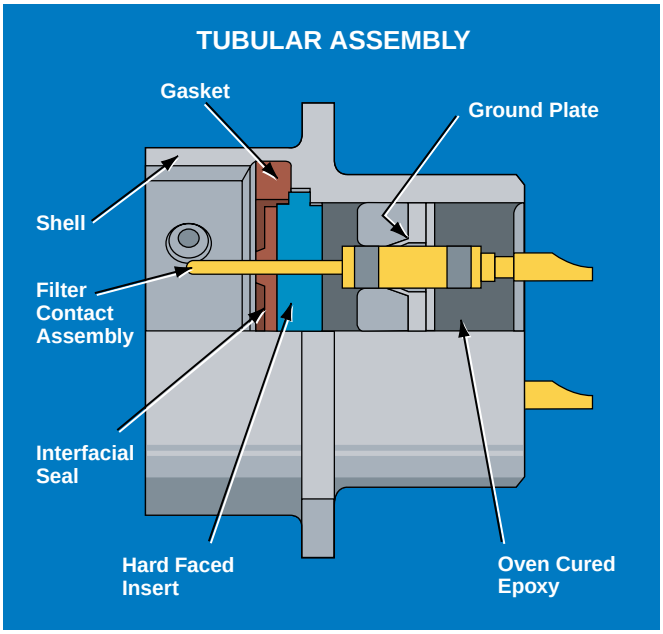

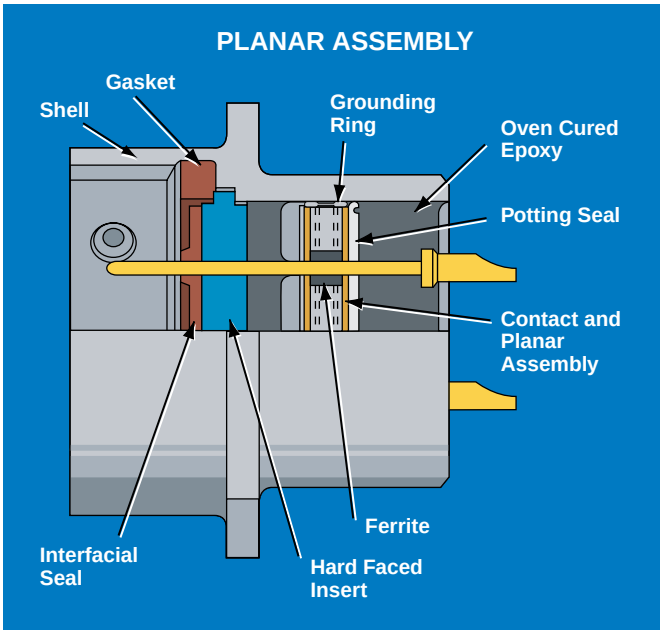

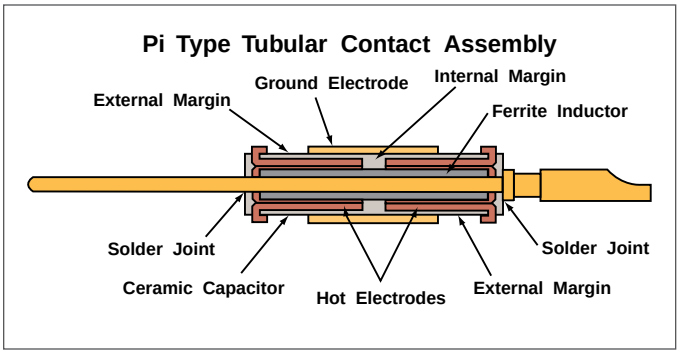

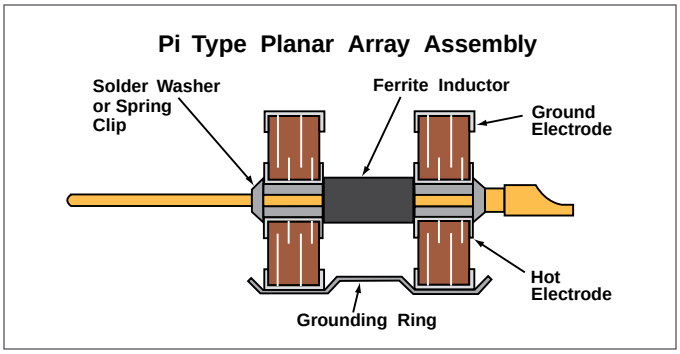

EMI Capabilities
For Maximum Design Flexibility, Continued

Amphenol provides a wide range of filtering solutions. You can select your options for your particular interference threats - VHF, UHF, HF or other filter ranges, then couple with a connector package of your choice. Or give Amphenol your custom shell design requirements for assistance in designing your unique filter solution.

EMI Filter connectors are intended for use in temperatures from –55°C to +125°C. Attenuation will change with feed-through current and temperature.*

To assure reliability, connectors may be subjected to an attenuation performance test verifying proper assembly and grounding of the filters. Attenuation data on filter performance is stated in reference to a 50 ohm impedance system in order to allow filter performance to be more easily translated into real world impedances. Those interested in determining the expected filter performance in an impedance system other than 50 ohms may refer to page 284 of this catalog or may contact Amphenol Aerospace for further assistance.

It is suggested that the user analyze his system requirements for EMI protection in the following areas:

- Working voltage (DC or AC and Frequency)
- Peak voltage
- Desired attenuation at a given frequency level
- Any special capacitance limitations

Definition of Filter Contacts:

MF-1	Medium Frequency 50 dB performance between 300 - 2999 KHz
HF-1	High Frequency 50 dB performance between 3 - 29 MHz
VHF-1	Very High Frequency 50 dB performance between 30 - 2999 MHz
UHF-1	Ultra High Frequency 50 dB performance between 300 - 2999 MHz

Filter contacts can be provided in most frequencies in contact sizes 22 or larger. Consult Amphenol Aerospace for availability.

Tubular connector designs will meet 3 amps RF current from –55°C through +125°C. Planar connector designs will meet 5 amps.

* More in-depth information on attenuation is available in: L-1146, General Design Guideline for EMI Filters and/or TVS (Transient Voltage Suppression) Connectors.
Also for further information ask for:
L-1145, How to Specify Filter Connectors.

Planars, MOV's, Tubular and Diode Contacts

Planar Array Assembly

Capacitor and MOV Planars

Tubular Filters and Diode Contacts

Contact Options

- Coaxial, concentric twinax, triax and quadrax contacts can be included in arrangements of filtered contacts for signal or power circuits (Please refer to the High Speed Contacts Section for High Frequency Contacts for Multi-Pin Connectors).
- Filter contacts with differing cut-off frequencies can be mixed in any given insert arrangement. (ratio 100:1 typical)
- Ground, insulated or filter contacts can be combined within the same connector to meet unique or changing frequency protection requirements.
- Thermocouple contacts
- Diodes for EMP

Methods of Wire Termination

- Solder cup - wire termination
- PCB termination (Pre-tinning is available)
- Solderless wrap
- Amphenol® UTS (Universal Termination System) allows crimp termination. It uses crimp insertable socket contacts on conductor wires. Sockets mate with filter pins within the connector body. (Socket type M39029/57). (For further contact information, see section, MIL-DTL-38999 Series I & II).
- Weld terminal for thermocouple contacts

Filter Connector Options

Adapters
Filter adapters eliminate replacement of either existing mated pair. The adapter provides the circuit protection at the MF, VHF and UHF levels, and is an effective and economical method of introducing EMI/EMP protection to an installed system. Adapters are to be placed between mating faces. (See pages 332).

Printed Circuit Board Mount
Receptacle shell modifications that allow mounting directly to a PC board or flex header. Stand-off shells are available in different configurations. These offer improved reliability by eliminating external spacers and washers. (See pages 293, 294, 299, 300, 313 and 316).

Hermetic
The hermetic filter connector, while only approximately 1/2 inch longer than standard series connectors, provides all the benefits of a hermetic connector, plus EMI protection for sensitive circuits. The filter assembly is protected by a fused glass insert within a unique steel housing. This design provides the capability to tolerate high level static pressure while maintaining a low level leakage rate. More information on Hermetics is given on page 423.

Composite
Composite shell filter connectors meet the MIL-DTL-38999, Series III dimensional length, and offer a light-weight, corrosion resistant, durable connector with the same high performance features as its metal counterpart. The composite filter connector utilizes planar technology to accommodate VHF-1 or better electrical performance characteristics. (See FCTV Composites on pages 290-294).

ESD Protection
Filter connectors with ESD (Electrostatic Discharge) protection are available. These MIL-DTL-38999 Series I and III connectors have an added feature of a Faraday Cage to shunt electrostatic discharge events to the conductive enclosure on which the connector is mounted. (See page 422).

Filtered Plugs
Filtered Plugs are designed for applications where EMI protection is essential, but access to the receptacle is denied. Designed with the same components as a standard filter receptacle, the filtered plug offers the option of being mounted on the cable harness. It is a cost effective method of achieving EMI protection when length restrictions prohibit inclusion of an adapter to the system. Consult Amphenol Aerospace for availability.

Diode Connectors
Diode Connectors offer versatility with transient protection for sensitive circuits, such as TTL lines. Diodes can stand alone or be combined with other filters. (Pages 335-336).

Shunting Assembly
Amphenol's Energy Shunting Assembly is a simple, compact unit which provides lightning and electromagnetic pulse protection of systems in which many signal lines enter sensitive electronic equipment. (Page 337).

Circular Filter Protection Connectors are offered in a wide range of styles, with custom designs for special applications.

Filter Adapters can be attached to connectors to provide EMI/EMP protection.

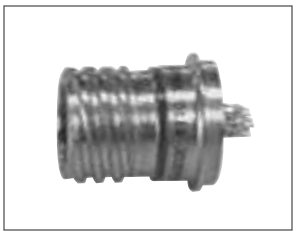

Hermetic filter connector

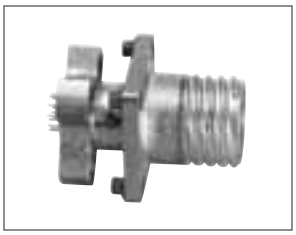

Composite stand-off shell Filter 38999 connector

Filtered plug

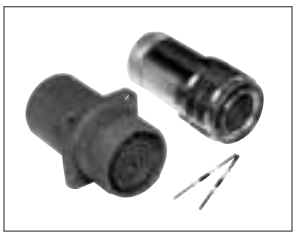

Diode Connectors

ESA - Energy Shunting Assembly

Amphenol® EMI Connectors are produced with several types of filters. They are all low band pass filters with the following configurations:

Pi -
Typical of the VHF, UHF and MF filter

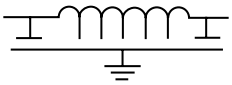

Cascaded Pi -
Typical of the HF filter. It consists of two VHF Pi filters on a common pin and is available in tubular designs only.

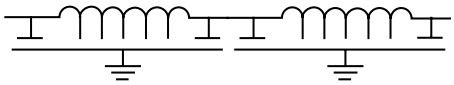

Capacitor *-
Consists of a feed-through capacitor without any ferrite. It can be 50pf to 1µf and carry the MF, HF and VHF designation depending on its typical 50dB performance.

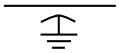

L-C *-
Typical of HF, VHF and UHF filter. Low source / high load impedance.

C-L *-
Typical of HF, VHF and UHF filter. High load impedance / low source.

T *-
Typical of HF, VHF and UHF filter. Low source / low load impedance.

* Consult factory for attenuation performance values.

Parameters		Medium Frequency Filter✦	High Frequency Filter✦	Very High Frequency Filter		Ultra High Frequency Filter	
		MF-1 (Pi)	HF-1 (Cascaded Pi)	VHF-1 (Pi)	VHF-2† (Pi)	UHF-1† (Pi)	UHF-2† (Pi)
Minimum Attenuation (Test Points)*	150kHz	20dB	–	–	–	–	–
	15MHz	–	50dB	–	–	–	–
	50MHz	–	80dB	–	–	–	–
	100MHz	80dB	–	62dB	46dB	18dB	28dB
Maximum Working Voltage (User must specify DC or AC)††††	DC†††	50VDC	200VDC	200VDC	200VDC	200VDC	200VDC
Dielectric Withstanding Voltage Capability (for 5 sec. with 10 milliamperes max. charging current)✦✦		100 volts DC	500 volts DC	500 volts DC	500 volts DC	500 volts DC	500 volts DC
Maximum Feed-thru Current (DC and/or Audio Frequency R.M.S.)	Size 16 contacts	13.0 amps	13.0 amps	13.0 amps	13.0 amps	13.0 amps	13.0 amps
	Size 20 contacts	7.5 amps	7.5 amps	7.5 amps	7.5 amps	7.5 amps	7.5 amps
	Size 22 contacts	not available	not available	5.0 amps	5.0 amps	5.0 amps	5.0 amps
Maximum RF Current		3.0 amps	3.0 amps	3.0 amps	3.0 amps	3.0 amps	3.0 amps
Minimum Insulation Resistance		250 megohms	10 gigaohms	10 gigaohms	10 gigaohms	10 gigaohms	10 gigaohms
Typical Capacitance**		1.0 microfarad	16 nanofarads	7 nanofarads	2.5 nanofarads	375 picofarads	710 picofarads
Air Leakage††		4.6 x 10^{-3} cc/sec					
Operating Temperature Range		–55°C to +125°C					

* When tested at 25°C per MIL-STD-220.
** When measured at a frequency of 1 ±.1kHz and a voltage not exceeding 1.0 V.A.C.R.M.S. at +25°C.
† Consult Amphenol, Sidney, NY or your Amphenol representative for part number.
†† Lower leakage rates are available upon request.
††† Summation of the DC and low level AC super-imposed peak voltage.
†††† Consult Amphenol, Sidney, NY whenever AC voltage is present.
✦ Consult Amphenol, Sidney, NY or your Amphenol representative for availability.
✦✦ Higher DWV ratings are available upon request. Consult Amphenol, Sidney, NY.

Effect of Temperature on EMI Filter Attenuation

Note: Below are typical capacitance values. Other capacitance values are available from 5pf to 400 NF in one capacitor element. Please consult factory for part numbers.

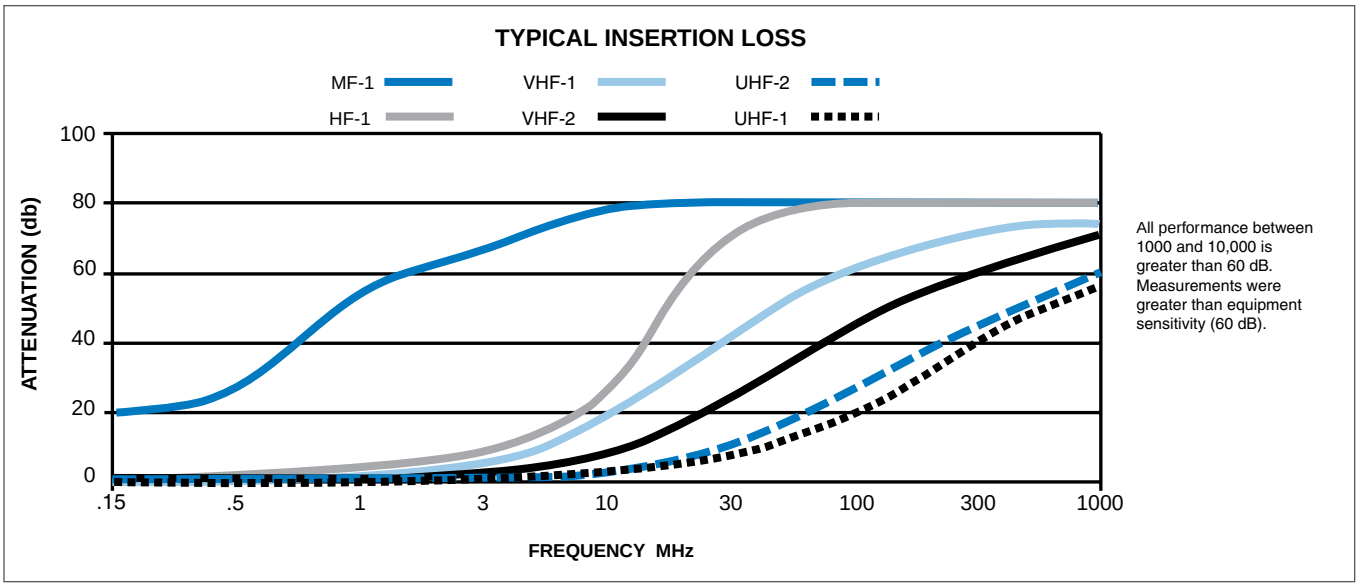

All performance between 1000 and 10,000 is greater than 60 dB. Measurements were greater than equipment sensitivity (60 dB).

TYPICAL INSERTION LOSS (dB) PER MIL-STD-220, 5 ADC, 25°C

Capacitance	1MHz	3MHz	10MHz	30MHz	100MHz	300MHz	1000MHz
375 pf UHF_1	0	0	1	8	16	–	–
750 pf UHF_2	0	0	3	10	19	–	–
2500 pf VHF_2	0	2	8	20	28	–	–
7000 pf VHF_1	5	9	17	23	40	–	–
16000 pf HF_1	6	14	20	24	80	–	–

Most filter attenuation curves and capacitance values are expressed at 25°C. However, temperature can affect the capacitance of a titanate filter element, affecting the insertion loss that the element will cause.
In order to assist the user in anticipating the effect of various temperatures, the following charts applicable to Amphenol® filter connectors utilizing MF-1, HF-1, VHF-1, VHF-2, UHF-1 and UHF-2 filters are provided. Please note that all insertion loss (attenuation) values given were measured with no load applied. The band designations refer to MIL-STD-2120.

MF-1*
Typical Capacitance = 1,000,000 pf Min. 800,000 pf Max. 1,600,000 pf
Type Pi

Temp.	Fco	1MHz	3MHz	10MHz	30MHz	100MHz	300MHz	1000MHz
–55°C	–	18	–	64	80	80	80	80
Room	7.94K	55	–	80	80	80	80	80
+125°C	–	22	–	70	80	80	80	80

VHF-2
Typical Capacitance = 2,500 pf Min. 1,900 pf Max. 4,000 pf
Band E, Type Pi

Temp.	Fco	1MHz	3MHz	10MHz	30MHz	100MHz	300MHz	1000MHz
–55°C	–	0	2	7	17	40	58	71
Room	3.3M	0	2	8	24	46	61	71
+125°C	–	0	3	10	26	46	63	69

HF-1*
Typical Capacitance = 16,000 pf Min. 9,800 pf Max. 24,000 pf
Type Cascaded Pi

Temp.	Fco	1MHz	3MHz	15MHz	50MHz	100MHz	300MHz	1000MHz
–55°C	–	2	6	24	62	80	80	80
Room	648K	3	9	50	80	80	80	80
+125°C	–	0	6	30	62	80	80	80

UHF-2
Typical Capacitance = 750 pf Min. 500 pf Max. 1,100 pf
Band C, Type Pi

Temp.	Fco	1MHz	3MHz	10MHz	30MHz	100MHz	300MHz	1000MHz
–55°C	–	0	0	3	9	25	46	61
Room	12.7M	0	0	3	10	28	46	61
+125°C	–	0	0	3	10	24	42	60

VHF-1
Typical Capacitance = 7,000 pf Min. 4,900 pf Max. 12,000 pf
Band G, Type Pi

Temp.	Fco	1MHz	3MHz	10MHz	30MHz	100MHz	300MHz	1000MHz
–55°C	–	1	2	8	21	44	61	65
Room	1.27M	1	6	18	42	62	72	75
+125°C	–	0	2	9	24	45	62	64

UHF-1
Typical Capacitance = 375 pf Min. 290 pf Max. 450 pf
Band B, Type Pi

Temp.	Fco	1MHz	3MHz	10MHz	30MHz	100MHz	300MHz	1000MHz
–55°C	–	0	0	1	6	21	43	58
Room	21.9M	0	0	1	8	18	42	56
+125°C	–	0	0	1	8	17	38	50

Note: F_{CO} = Cut-off Frequency
* Consult Amphenol, Sidney, NY for availability.

Impedance Matching Formula
(Your System to a 50 Ohm System)

The following formula and example are offered in order to determine the expected filter performance in an impedance system other than 50 ohms.

With the attenuation expressed in 50 ohms and the transfer impedance curve shown in Figure 1 below, a designer can relate the expressed attenuation to the input and output impedance of his circuit.

Example:

(1) Noise is 40dB above specification level at 100 MHz
(2) Input and output impedance are 10 and 100 ohms respectively
(3) Amphenol® VHF 7000 pf filter has a 65 dB minimum attenuation at 100 MHz and +25°C

Formula (Taken from Figure 1):

1.4 x 10 ohm = transfer impedance for 65 dB in a 50 ohm system

$$\text{Atten (dB)} = 20 \log_{10} \left[1 + \frac{Z_S Z_L}{Z_{12}(Z_s + Z_L)} \right]$$

Z_S = source impedance
Z_L = load impedance
Z_{12} = transfer impedance

Atten = filter performance in a system other than 50 ohms

$$\text{Atten (dB)} = 20 \log_{10} \left[1 + \frac{10(100)}{1.4 \times 10^{-2} (10 + 100)} \right]$$

Attenuation = 56.3dB

In this case, the 7000 pf VHF filter will give 56.3 dB which is 16.3dB below the desired reduction in noise (40dB) as stated in the above problem.

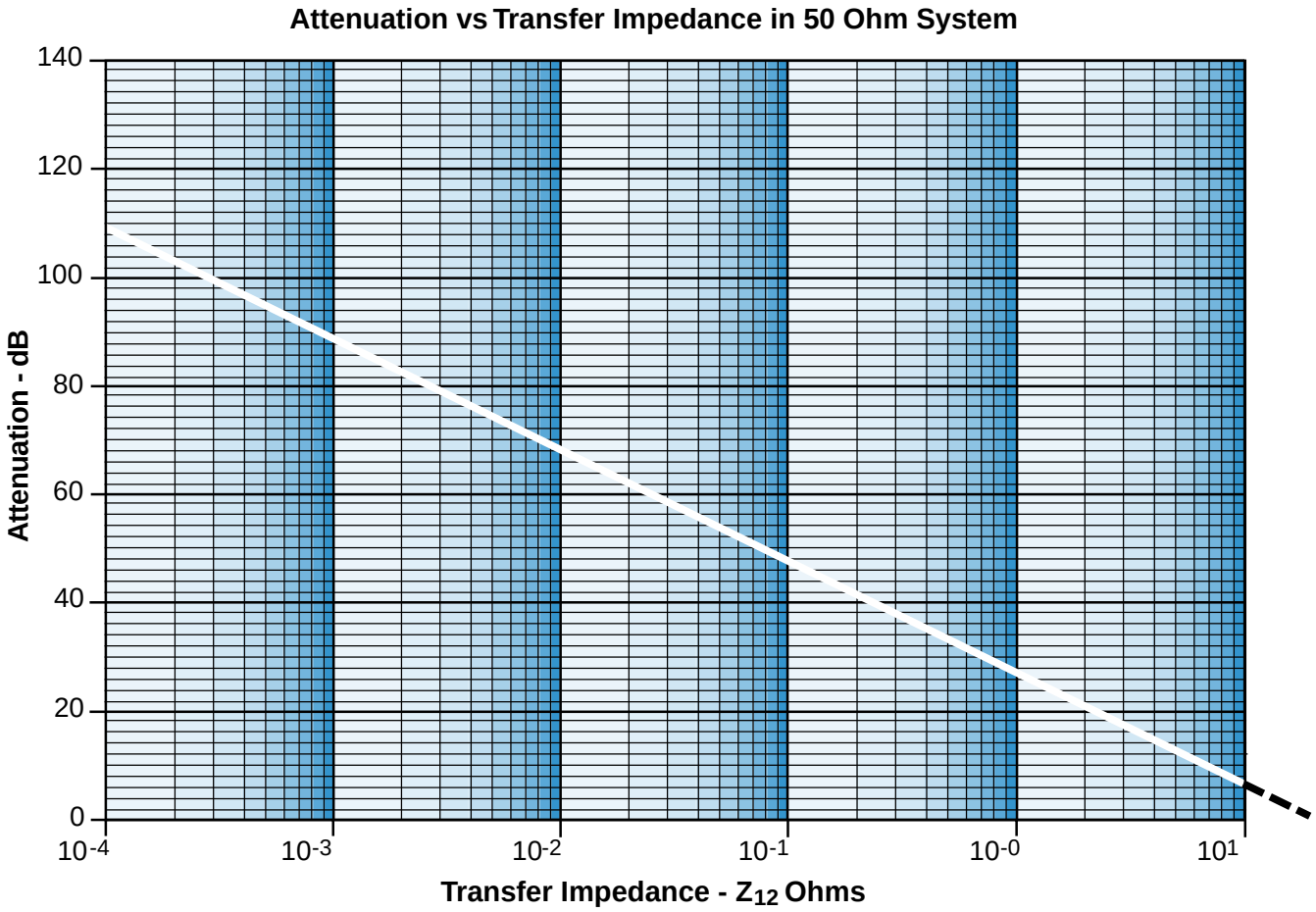

Figure 1

Amphenol Aerospace

ACCEPTANCE TESTING

All filter connectors undergo extensive acceptance testing to assure product quality. An outline of standard acceptance testing performed is as follows:

Mechanical Inspection

- Dimensional inspection of shells, keys, keyways and mounting surfaces by either in-process inspection of components or inspection of final assemblies.
- Visual inspection of contacts, inserts and seals, gaskets and surface finish of shells and hardware.

Electrical Tests

- Insulation resistance of filter contacts is checked 100% **at the working voltage and to the test limit** listed for each filter in the filter selection data table.
- Dielectric withstanding voltage is tested on 100% of filter contacts at the voltage listed in the filter selection data table.
- Capacitance is tested 100% at 1KHz.

Special Tests/Processes

In addition to the standard acceptance testing and processes, the following additional production testing and processing can be provided upon request:

- Attenuation testing (through 100 MHz)
- Leakage inspection
- Thermal cycling/shock
- Burn-in
- De-gassing

Consult Amphenol Aerospace for further information.

Qualifications

Amphenol® filter connectors have been qualified and are on periodic requalification to specification BSF-1 (available from your Amphenol representative). This is patterned after MIL-DTL-38999, modified to include mechanical and environmental testing and electrical parameters important to filter connector performance.

These acceptance tests, along with exhaustive in-process inspection and testing, give Amphenol® filter connectors their reputation for reliability.

ATTENUATION TEST CIRCUIT

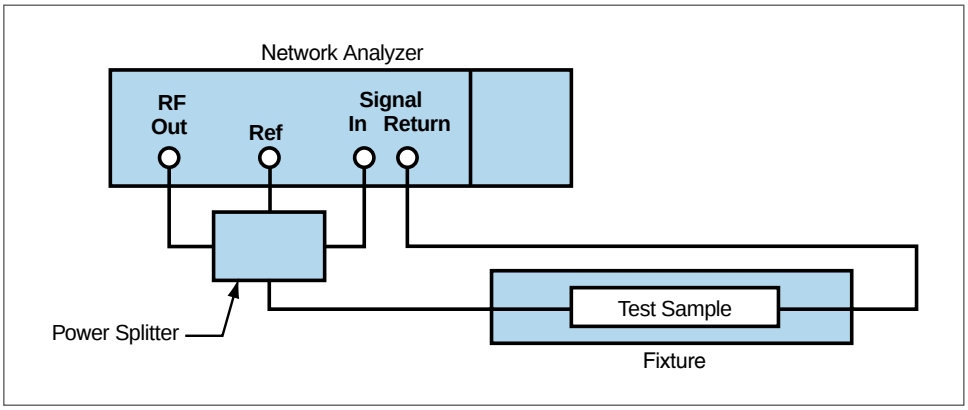

There are multiple test stations located on the Amphenol production floor that support all in-process, final electric and qualification testing as necessary.

How to Order Filter Connectors

Step 1.

Fill out the EMI Filter Connector Check list on page 287.

This check list page can be copied, filled out and sent to an Amphenol technical support person. Fax it to 607-563-5157 and a filter connector specialist will help you.

Step 2.

Choose the Contact and Attenuation Characteristics requirements on page 283 and 284

Step 3.

Choose the Shell Style that fits your application

Refer to each of the style sections in this catalog.

Filter Connector Type	Filter Connector Brief Description	Pages
FCTV	MIL-DTL-38999 Series III with Composite shell	290-294
FTV	MIL-DTL-38999 Series III with Metal shell (Aluminum)	295-300
FJT	MIL-DTL-38999, Series II	301-307
FLJT	MIL-DTL-38999 Series I	308-317
FSJT	Commercial 38999 type	318-321
FBL	MIL-DTL-38999, Series IV	322-324
FPT	MIL-DTL-26482	324-329
FAN	MIL-DTL-5015	330-331

Step 4.

See How to Order on page288, 289

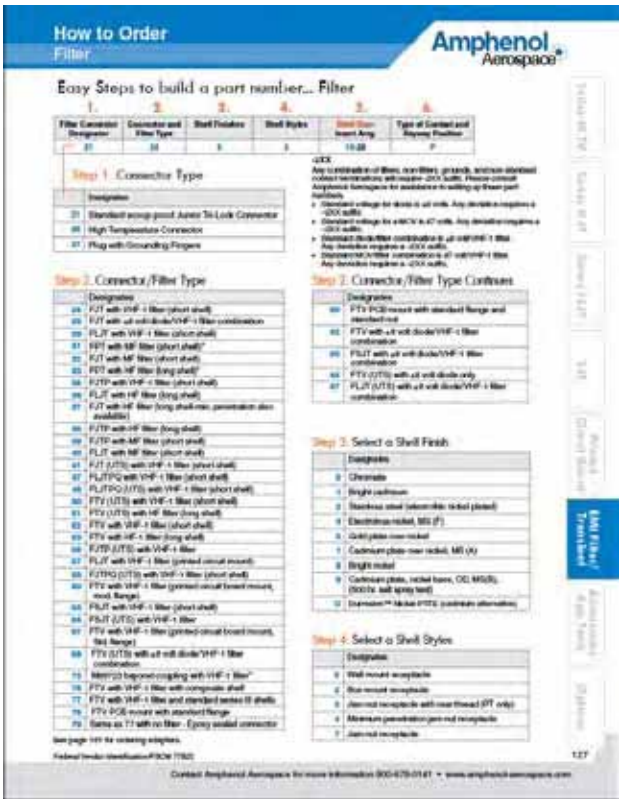

Amphenol Aerospace

1. Fill out the EMI Filter Connector Check list

Date _____

Ref. Filter P/N _____ **Ref. Mil-Spec** _____

Filter Requirements:

Filter Type (Pi, C, LC, T, LL, other) _____

Capacitance (locations) _____

Capacitance (locations) _____

Capacitance (locations) _____

Ground Contacts (locations) _____

Insulated feed-thru (locations) _____

Frequency (MHz)	Insertion Loss (dB)
1	
3	
10	
30	
100	

Electrical Requirements:

Working Voltage (VDC or VAC and frequency) _____

Dielectric Withstand Voltage (VDC) _____

Modified Shell: (Flange moved, clinch nuts, heilicoils, stand offs, etc.) _____

Special Requirements: (AC voltage, spike voltage, attenuation testing, thermal cycling, burn-in, capacitor lot traceability, water immersion, etc.) _____

Contact Termination:

UTS (Crimp) _____

Solder Cup _____

Wire Wrap Flat dim. _____

Stickout dim. _____

PCB tail:

Diameter dim. _____

Stickout dim. _____

Pre-tin? _____

What is terminated to connector (ie. flex, rigid flex, PCB, etc.)? _____

Special Cleaning _____

(if so, recommend a protective cap with an environmental gasket)

Special Stamping: _____

Customer: _____

Program: _____

Forecast: _____

Requested by: _____

Comments: _____

Fax a completed copy to 607-563-5157

Easy Steps to build a part number... Filter

1. Filter Connector Designator	2. Connector and Filter Type	3. Shell Finish	4. Shell Styles	5. Shell Size – Insert Arrg.	6. Type of Contact and Keyway Position
21	24	9	2	16-26	P

Step 1. Select a Connector Type

	Designates Filter Connector
21	Filter Connector
36	MOV Connector
47	Diode Connector

Step 2. Select a Connector/Filter Type

	Designates
20	FPT with VHF-1 filter (short shell)
22	FPTE with VHF-1 filter (short shell)
24	FJT with VHF-1 filter (short shell)
25	FJT with ±8 volt diode/VHF-1 filter combination
26	FAN with VHF-1 filter
29	FLJT with VHF-1 filter (short shell)
31	FPT with MF-1 filter (short shell)
32	FJT with MF-1 filter (short shell)
33	FPT with HF-1 filter (long shell)
34	FJTP with VHF-1 filter (short shell)
36	FLJT with HF-1 filter (long shell)
37	FJT with HF-1 filter (long shell-min. penetration also available)
38	FJTP with HF-1 filter (long shell)
39	FJTP with MF-1 filter (short shell)
40	FLJT with MF-1 filter (short shell)
41	FJT (UTS) with VHF-1 filter (short shell)
46	FPT (UTS) with VHF-1 filter
47	FLJTPQ with VHF-1 filter (short shell)
48	FLJTPQ (UTS) with VHF-1 filter (short shell)
50	FTV (UTS) with VHF-1 filter (short shell)
51	FTV (UTS) with HF-1 filter (long shell)
52	FTV with VHF-1 filter (short shell)
53	FTV with HF-1 filter (long shell)
56	FJTP (UTS) with VHF-1 filter
57	FLJT with VHF-1 filter (printed circuit mount)
58	FJTPQ (UTS) with VHF-1 filter (short shell)
60	FTV with VHF-1 filter (printed circuit board mount, mod. flange)
61	FBL with VHF-1 filter (short shell)
63	FSJT with VHF-1 filter (short shell)
64	FBL (UTS) with VHF-1 filter
65	FSJT (UTS) with VHF-1 filter
67	FTV with VHF-1 filter (printed circuit board mount, Std. flange)
68	FTV (UTS) with ±8 volt diode/VHF-1 filter combination

Step 2., Continues Select Connector/Filter Type

	Designates
73	M83723 bayonet coupling with VHF-1 filter
76	FCTV with VHF-1 filter with composite shell
77	FTV with VHF-1 filter and standard series III shells
78	FCTV PCB mount with standard flange and VHF-1 filter
79	Same as 77 with no filter - Epoxy sealed
80	FTV PCB mount with standard flange, standard nut and VHF-1 filter
82	FTV with ±8 volt diode/VHF-1 filter combination
83	FSJT with ±8 volt diode/VHF-1 filter combination
84	FTV (UTS) with ±8 volt diode only
87	FLJT (UTS) with ±8 volt diode/VHF-1 filter combination

Step 3. Select a Shell Finish

	Designates
0	Chromate
1	Bright cadmium
2	Stainless steel (electrolitic nickel plated)
4	Electroless nickel, MS (F)
5	Gold plate over nickel
7	Cadmium plate over nickel, MS (A)
8	Bright nickel
9	Cadmium plate, nickel base, OD, MS(B), (500 hr. salt spray test)
D	Durmalon™ Nickel-PTFE (cadmium alternative)

Step 4. Select a Shell Style

	Designates
0	Wall mount receptacle
2	Box mount receptacle
3	Jam nut receptacle with rear thread (PT only)
4	Minimum penetration jam nut receptacle
7	Jam nut receptacle

See page 332 for ordering Filter Adapters.
Federal Vendor Identification/FSCM 77820

Step 5. Select a Shell Size & Insert Arrangement

Shell Size	Designates
8 through 24	Shell sizes available for FJT, Series I
9 through 25	Shell sizes available for FLJT, Series II and TV, Series III

Shell Size & Insert Arrangements are together in one chart. First number represents Shell Size, second number is the Insert Arrangement.

- MIL-DTL-38999 see pages 4-7
- MIL-DTL-26482, Matix Series 2 see page 111 or catalog 12-070 for Series 1
- MIL-DTL-5015, Matrix see pages 172 &173 or catalog 12-020
- High Density HD38999 Filter Connector in Stand-off shells see page 43 and consult Amphenol Aerospace for ordering information.

New Featured

NEW High Density Patterns are available in Filter 38999 connectors in standard Mil-Spec or filter length shells. They provide 30% more contacts than standard insert arrangement patterns. Please see page 43 and consult Amphenol Aerospace for ordering Information.

Step 6. Select the type of Contact and Normal or Alternate Keying Positions

Shell Size	Designates
P	Pins in a normal rotation
S	Socket in a normal rotation

For alternate keying positions for each series:

- FTV/CTV see pages 290
- FJT see page 301
- FLJT see page 308
- FSJT see page 318
- FBL see page 322
- FPT see page 324
- FAN see page 330 see page 43 and consult Amphenol Aerospace for ordering information.

Note:

-2XX Suffix

Any combination of filters, non-filters, grounds, and non-standard contact terminations will require -2XX suffix. Please consult Amphenol Aerospace for assistance in setting up these part numbers.

- Standard voltage for diode is ±8 volts. Any deviation requires a –2XX suffix.
- Standard voltage for a MOV is 47 volts. Any deviation requires a –2XX suffix.
- Standard diode/filter combination is ±8 volt/VHF-1 filter. Any deviation requires a –2XX suffix.
- Standard MOV/filter combination is 47 volt/VHF-1 filter. Any deviation requires a –2XX suffix.

See page 332 for ordering adapters; page 106, 107 for ordering universal headers.

Record your part numbers here...

1. Filter Connector Designator	2. Connector and Filter Type	3. Shell Finish	4. Shell Styles	5. Shell Size – Insert Arrangements	6. Type of Contact and Keyway Position

The Amphenol® FTV Series III, demonstrates unsurpassed technical leadership. With added filter features, the high performance general duty threaded connector is designed to withstand the pressures of severe environment applications. The FCTV Series is the Composite Series III with filtering for EMI/EMP protection. It offers the same high performance as its metal counterpart, the FTV, but with a lightweight, corrosion resistance shell.

FTV & FCTV Composite
Intermateable with MIL-DTL-38999 Series III Connectors (See section Series III TV, MIL-DTL-38999)

- Quick Mating - completely mates in a 360° turn of the coupling nut
- Lockwiring Eliminated - incorporates anti-decoupling device
- Contact Protection - 100% "scoop-proof"
- Improved Moisture Resistance - prevents electrolytic erosion of contacts
- Lightweight Composite Shell - 17% – 70% weight savings over metal
- Corrosion Resistant - available in standard MIL-DTL-38999 olive drab cadmium (175°C) and electroless nickel plating (200°C), both withstanding 2000 hours of salt spray exposure. The base material is able to withstand an indefinite exposure to salt spray.
- Durability - 1500 couplings minimum (in reference to connector couplings, not contacts)

FTV & FCTV Key/Keyway Positions

Shell Size	Key & Keyway arrangement identification letter	AR° or AP° BSC	BR° or BP° BSC	CR° or CP° BSC	DR° or DP° BSC
9	N	105	140	215	265
	A	102	132	248	320
	B	80	118	230	312
	C	35	140	205	275
	D	64	155	234	304
	E	91	131	197	240
11, 13, 15	N	95	141	208	236
	A	113	156	182	292
	B	90	145	195	252
	C	53	156	220	255
	D	119	146	176	298
	E	51	141	184	242
17 and 19	N	80	142	196	293
	A	135	170	200	310
	B	49	169	200	244
	C	66	140	200	257
	D	62	145	180	280
	E	79	153	197	272
21, 23, 25	N	80	142	196	293
	A	135	170	200	310
	B	49	169	200	244
	C	66	140	200	257
	D	62	145	180	280
	E	79	153	197	272

All angles are BSC
The insert arrangement does not rotate with main key/keyway.

FTV

Composite FCTV Connector for PCB board mounting. Amphenol is currently the only supplier of one-piece composite PCB stand-off shells.

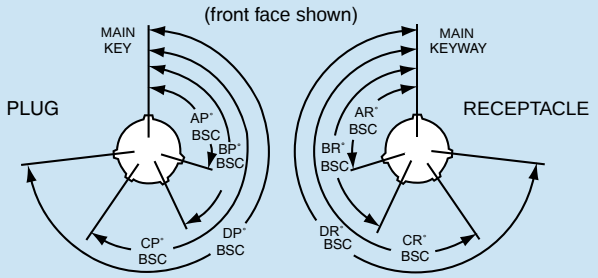

FCTV

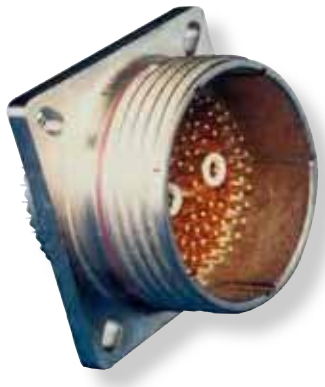

Amphenol Aerospace

PART # **To complete, see how to order pages 288-289.**

Filter Connector Designator	Connector Filter Type	Shell Finish	Shell Style	Shell Size & Insert Arrg	Type of Contact/ Keyway Position
21	76	X	0	XX-XX	X

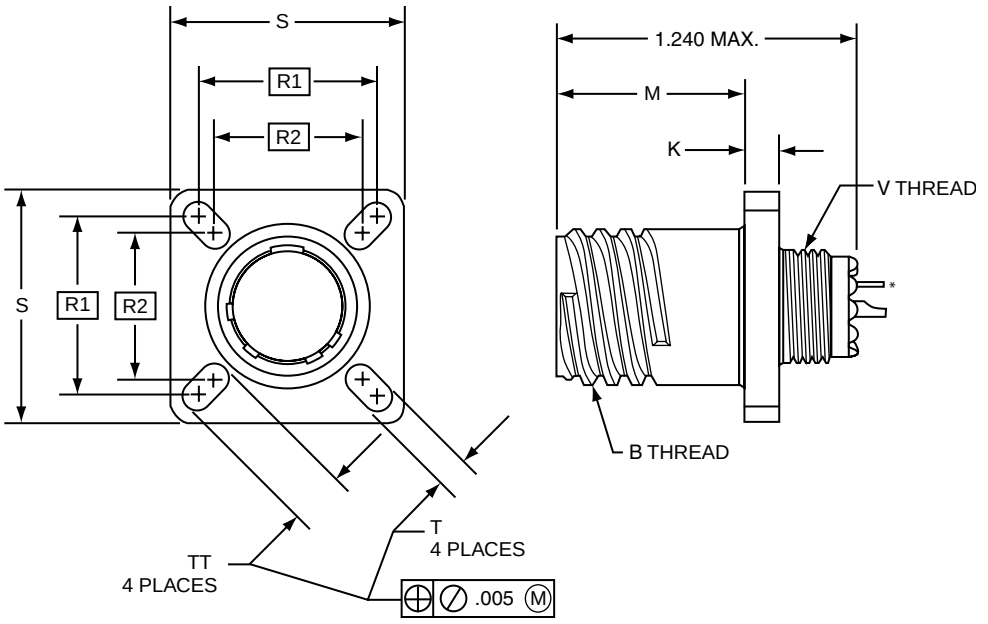

21-76X0

* Printed Circuit Tail available. Consult Amphenol Aerospace factory for Part Number.

Shell Size	B Thread Class 2A 0.1P-0.3L-TS (Plated)	M +.000 –.005	K ±.0025	R¹ TP	R² TP	S +.011 –.010	T +.008 –.006	TT +.008 –.006	V Thread Metric (Plated)
9	.6250	.773	.1378	.719	.594	.938	.128	.216	M12X1-6g0.100R
11	.7500	.773	.1378	.812	.719	1.031	.128	.194	M15X1-6g0.100R
13	.8750	.773	.1378	.906	.812	1.125	.128	.194	M18X1-6g0.100R
15	1.0000	.773	.1378	.969	.906	1.219	.128	.173	M22X1-6g0.100R
17	1.1875	.773	.1378	1.062	.969	1.312	.128	.194	M25X1-6g0.100R
19	1.2500	.773	.1378	1.156	1.062	1.438	.128	.194	M28X1-6g0.100R
21	1.3750	.741	.1654	1.250	1.156	1.562	.128	.194	M31X1-6g0.100R
23	1.5000	.741	.1654	1.375	1.250	1.688	.154	.242	M34X1-6g0.100R
25	1.6250	.741	.1654	1.500	1.375	1.812	.154	.242	M37X1-6g0.100R

All dimensions for reference only.

PART # To complete, see how to order pages 288-289.

Filter Connector Designator	Connector Filter Type	Shell Finish	Shell Style	Shell Size & Insert Arrg	Type of Contact/ Keyway Position
21	76	X	7	XX-XX	X

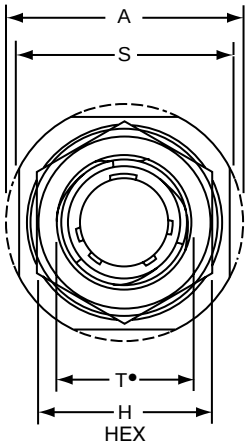

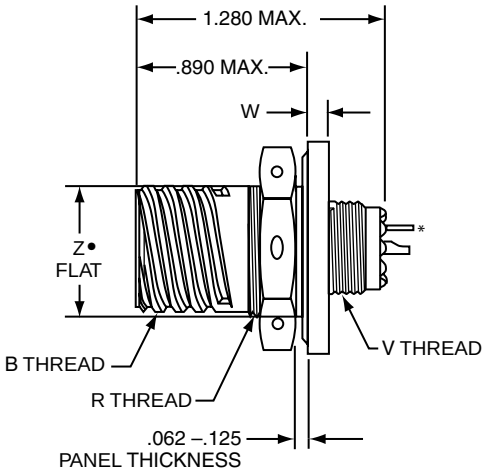

21-76X7

** Printed Circuit Tail available. Consult Amphenol Aerospace factory for Part Number.
• D shaped mounting hole dimensions

Shell Size	A Dia. ±.010	B Thread Class 2A 0.1P-0.3L-TS (Plated)	H Hex +.017 –.016	R Thread Metric (Plated)	S ±.015	T• +.010 –.000	V Thread Metric (Plated)	W +.035 –.004	Z• Flat +.000 –.010
9	1.188	.6250	.875	M17X1-6g0.100R	1.062	.697	M12X1-6g0.100R	.086	.669
11	1.375	.7500	1.000	M20X1-6g0.100R	1.250	.822	M15X1-6g0.100R	.086	.769
13	1.500	.8750	1.188	M25X1-6g0.100R	1.375	1.007	M18X1-6g0.100R	.086	.955
15	1.625	1.0000	1.312	M28X1-6g0.100R	1.500	1.134	M22X1-6g0.100R	.086	1.084
17	1.750	1.1875	1.438	M32X1-6g0.100R	1.625	1.259	M25X1-6g0.100R	.086	1.208
19	1.937	1.2500	1.562	M35X1-6g0.100R	1.812	1.384	M28X1-6g0.100R	.118	1.333
21	2.062	1.3750	1.688	M38X1-6g0.100R	1.938	1.507	M31X1-6g0.100R	.118	1.459
23	2.188	1.5000	1.812	M41X1-6g0.100R	2.062	1.634	M34X1-6g0.100R	.118	1.575
25	2.312	1.6250	2.000	M44X1-6g0.100R	2.188	1.759	M37X1-6g0.100R	.118	1.709

All dimensions for reference only.

(Printed Circuit Board Mount)

PART # To complete, see how to order pages 288-289.

Filter Connector Designator	Connector Filter Type	Shell Finish	Shell Style	Shell Size & Insert Arrg	Type of Contact/ Keyway Position
21	78	X	2	XX-XX	X

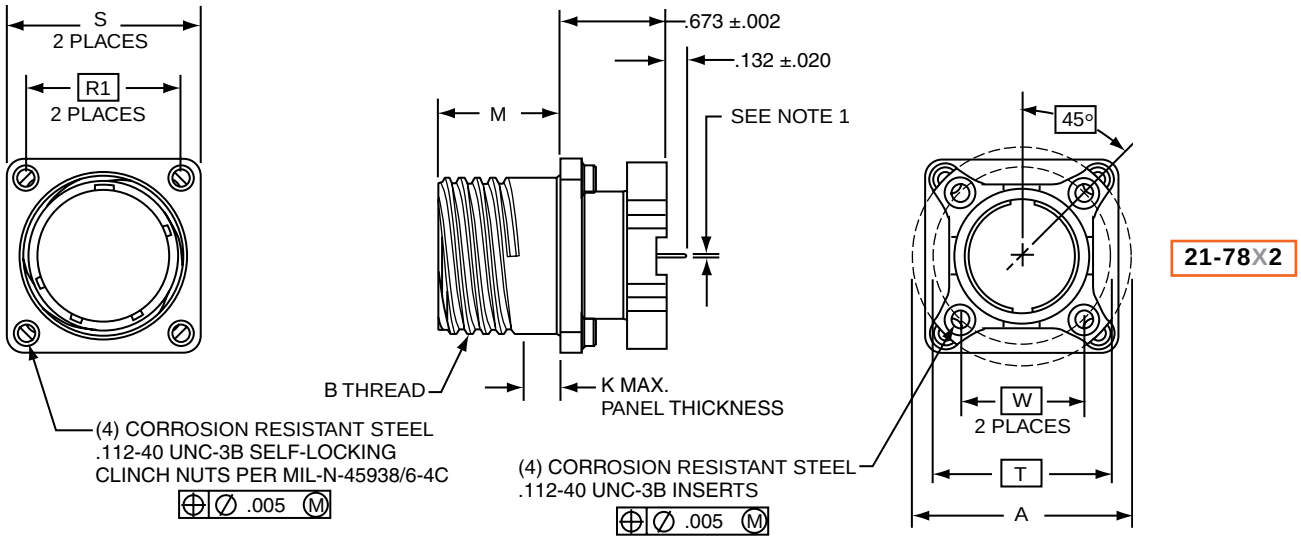

21-78X2

1. Standard tail for size 22 is .020 ±.001 dia.
   Standard tail for size 20 is .030 ±.001 dia.

Shell Size	A Dia. ±.005	B Thread Class 2A 0.1P-0.3L-TS (Plated)	M +.003 –.003	K Max. Panel Thickness	R[1] TP	S +.011 –.010	PCB Mounting Dimensions	
							T Dia. TP	W TP
9	1.016	.6250	.770	.234	.719	.938	.752	.532
11	1.148	.7500	.770	.234	.812	1.031	.850	.601
13	1.250	.8750	.770	.234	.906	1.125	.994	.703
15	1.375	1.0000	.770	.234	.969	1.219	1.119	.791
17	1.500	1.1875	.770	.234	1.062	1.312	1.237	.875
19	1.625	1.2500	.770	.234	1.156	1.438	1.379	.975
21	1.750	1.3750	.738	.204	1.250	1.562	1.489	1.053
23	1.875	1.5000	.738	.204	1.375	1.688	1.619	1.145
25	2.000	1.6250	.738	.204	1.500	1.812	1.744	1.233

All dimensions for reference only.

(Printed Circuit Board Mount)

PART # **To complete, see how to order pages 288-289.**

Filter Connector Designator	Connector Filter Type	Shell Finish	Shell Style	Shell Size & Insert Arrg	Type of Contact/ Keyway Position
21	78	X	7	XX-XX	X

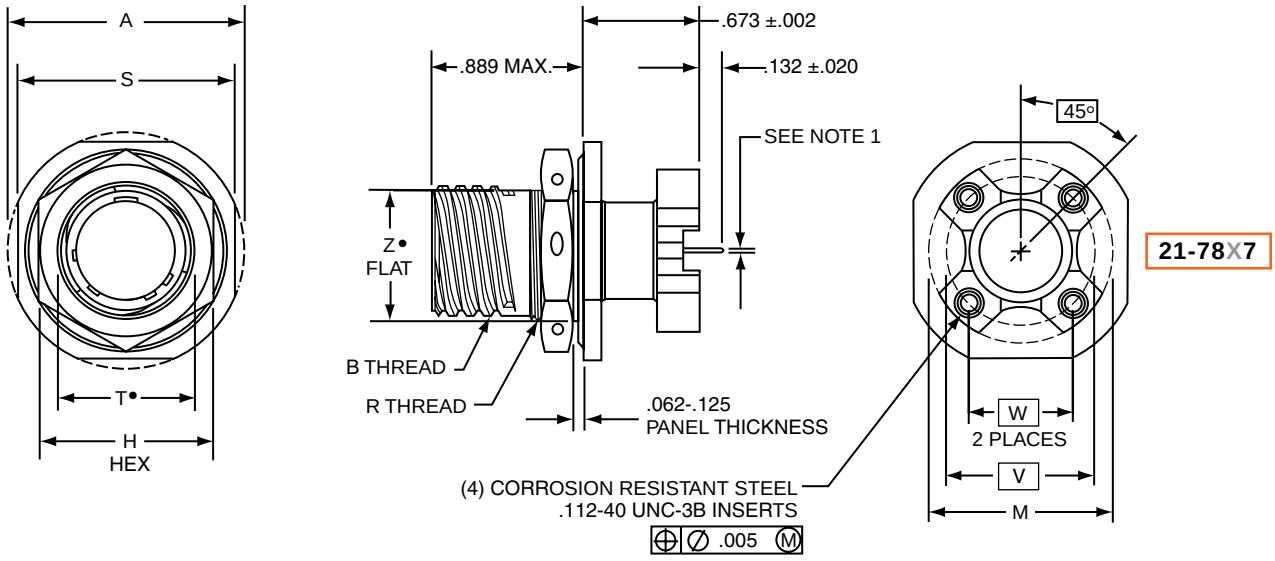

1. Standard tail for size 22 is .020±.001
   Standard tail for size 20 is .030±.001

• "D" shaped mounting hole dimensions

Shell Size	A Dia. ±.005	B Thread Class 2A 0.1P-0.3L-TS (Plated)	H Hex +.017 –.016	M Dia. ±.005	R Thread Metric (Plated)	S +.011 –.010	T• Dia. +.010 –.000	PCB Mounting Dimensions W TP	PCB Mounting Dimensions V Dia. TP	Z• Flat +.000 –.010
9	1.188	.6250	.875	1.016	M17X1-6g0.100R	1.062	.697	.532	.752	.669
11	1.375	.7500	1.000	1.148	M20X1-6g0.100R	1.250	.822	.601	.850	.769
13	1.500	.8750	1.188	1.250	M25X1-6g0.100R	1.375	1.007	.703	.994	.955
15	1.625	1.0000	1.312	1.375	M28X1-6g0.100R	1.500	1.134	.791	1.119	1.084
17	1.750	1.1875	1.438	1.500	M32X1-6g0.100R	1.625	1.259	.875	1.237	1.208
19	1.937	1.2500	1.562	1.625	M35X1-6g0.100R	1.812	1.384	.975	1.379	1.333
21	2.062	1.3750	1.688	1.750	M38X1-6g0.100R	1.937	1.507	1.053	1.489	1.459
23	2.188	1.5000	1.812	1.875	M41X1-6g0.100R	2.062	1.634	1.145	1.619	1.575
25	2.312	1.6250	2.000	2.000	M44X1-6g0.100R	2.188	1.759	1.233	1.744	1.709

All dimensions for reference only.

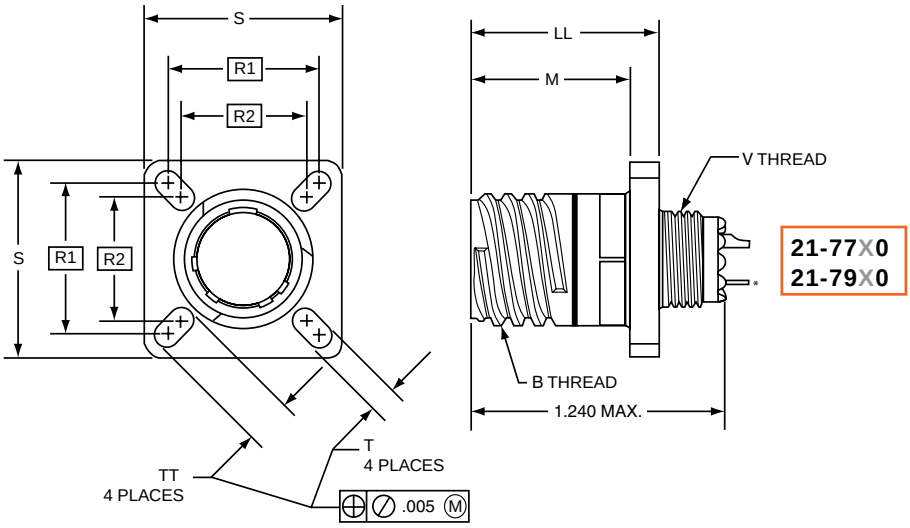

21-77X0
21-79X0

(Mil-Spec Length)

PART #
To complete, see how to order pages 288-289.

Filter Connector Designator	21	21
Connector Filter Type	77	79
Shell Finish	X	X
Shell Style	0	0
Shell Size & Insert Arrg	XX-XX	XX-XX
Type of Contact/ Keyway Position	X	X

* Printed Circuit Tail available. Consult Amphenol Aerospace, Sidney, NY for Part Number.

Shell Size	B Thread Class 2A 0.1P-0.3L-TS (Plated)	M +.000 –.005	LL +.006 –.000	R¹ TP	R² TP	S Max	T +.008 –.006	V Thread Metric (Plated)	TT +.008 –.006
9	.6250	.820	.905	.719	.594	.948	.128	M12X1-6g0.100R	.216
11	.7500	.820	.905	.812	.719	1.043	.128	M15X1-6g0.100R	.194
13	.8750	.820	.905	.906	.812	1.137	.128	M18X1-6g0.100R	.194
15	1.0000	.820	.905	.969	.906	1.232	.128	M22X1-6g0.100R	.173
17	1.1875	.820	.905	1.062	.969	1.323	.128	M25X1-6g0.100R	.194
19	1.2500	.820	.905	1.156	1.062	1.449	.128	M28X1-6g0.100R	.194
21	1.3750	.790	.905	1.250	1.156	1.575	.128	M31X1-6g0.100R	.194
23	1.5000	.790	.905	1.375	1.250	1.701	.154	M34X1-6g0.100R	.242
25	1.6250	.790	.905	1.500	1.375	1.823	.154	M37X1-6g0.100R	.242

All dimensions for reference only.

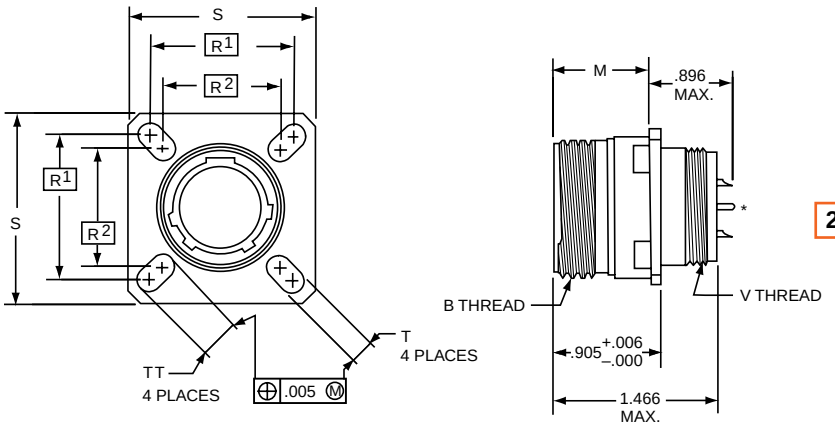

21-52X0

(Extended length shell**)

PART #
To complete, see how to order pages 288-289.

Filter Connector Designator	21
Connector Filter Type	52
Shell Finish	X
Shell Style	0
Shell Size & Insert Arrg	XX-XX
Type of Contact/ Keyway Position	X

* Printed Circuit Tail available. Consult Amphenol Aerospace, Sidney, NY for Part Number.

Shell Size	B Thread Class 2A 0.1P-0.3L-TS (Plated)	M +.000 –.005	R¹ TP	R² TP	S ±.010	T +.008 –.006	V Thread Metric (Plated)	TT +.008 –.006
9	.6250	.820	.719	.594	.938	.128	M12X1-6g0.100R	.216
11	.7500	.820	.812	.719	1.031	.128	M15X1-6g0.100R	.194
13	.8750	.820	.906	.812	1.125	.128	M18X1-6g0.100R	.194
15	1.0000	.820	.969	.906	1.219	.128	M22X1-6g0.100R	.173
17	1.1875	.820	1.062	.969	1.312	.128	M25X1-6g0.100R	.194
19	1.2500	.820	1.156	1.062	1.438	.128	M28X1-6g0.100R	.194
21	1.3750	.790	1.250	1.156	1.562	.128	M31X1-6g0.100R	.194
23	1.5000	.790	1.375	1.250	1.688	.154	M34X1-6g0.100R	.242
25	1.6250	.790	1.500	1.375	1.812	.154	M37X1-6g0.100R	.242

**Extended length accommodate higher voltage and/or higher capacitance applications

Plug movement required to clear FTV receptacles: .625 min.

(UTS Crimp)

PART # **To complete, see how to order pages 288-289.**

Filter Connector Designator	Connector Filter Type	Shell Finish	Shell Style	Shell Size & Insert Arrg	Type of Contact/ Keyway Position
21	50	X	0	XX-XX	X

UTS (Crimp) Contact SAE AS39029/57

21-50X0
UTS (Crimp) Contact
SAE AS39029/57

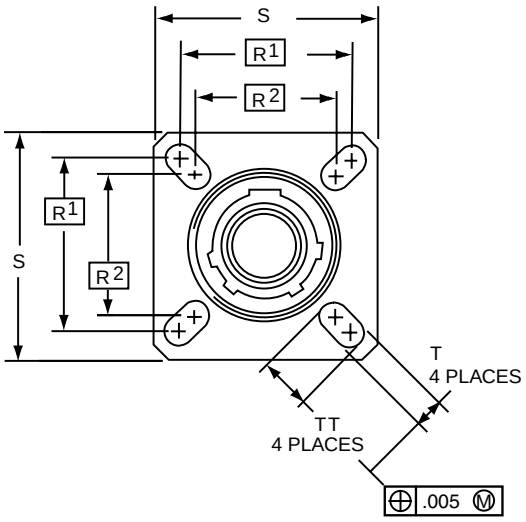

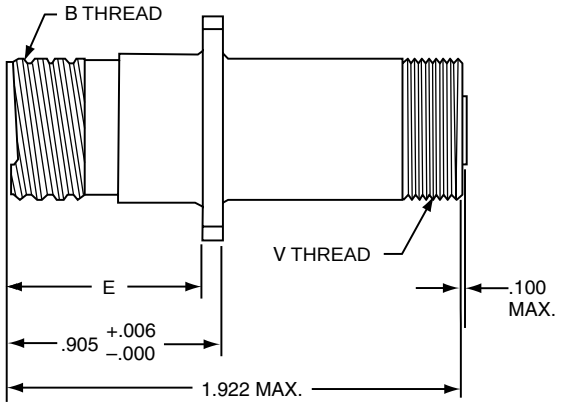

Shell Size	B Thread Class 2A 0.1P-0.3L-TS (Plated)	E +.000 –.005	R¹ TP	R² TP	S ±.010	T +.008 –.006	V Thread Metric (Plated)	TT +.008 –.006
9	.6250	.820	.719	.594	.938	.128	M15X1-6g0.100R	.216
11	.7500	.820	.812	.719	1.031	.128	M18X1-6g0.100R	.194
13	.8750	.820	.906	.812	1.125	.128	M22X1-6g0.100R	.194
15	1.0000	.820	.969	.906	1.219	.128	M25X1-6g0.100R	.173
17	1.1875	.820	1.062	.969	1.312	.128	M28X1-6g0.100R	.194
19	1.2500	.820	1.156	1.062	1.438	.128	M31X1-6g0.100R	.194
21	1.3750	.790	1.250	1.156	1.562	.128	M34X1-6g0.100R	.194
23	1.5000	.790	1.375	1.250	1.688	.154	M37X1-6g0.100R	.242
25	1.6250	.790	1.500	1.375	1.812	.154	M41X1-6g0.100R	.242

All dimensions for reference only.

FTV – MIL-DTL-38999, Series III

Jam Nut Receptacle - Aluminum

Amphenol Aerospace

(Mil-Spec Length)

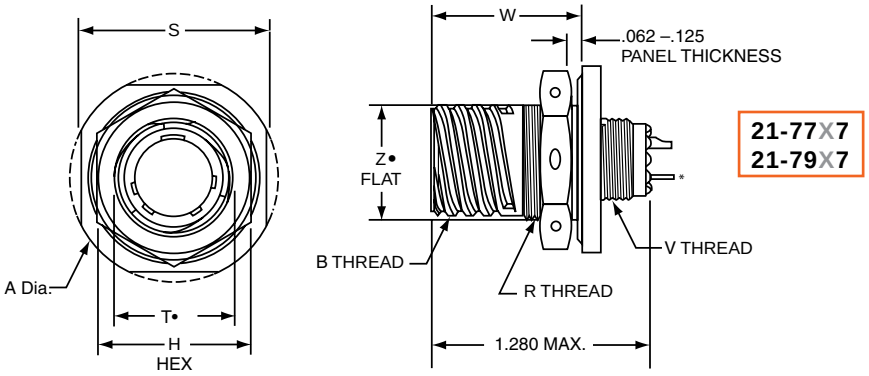

21-77X7
21-79X7

PART #

To complete, see how to order pages 288-289.

Filter Connector Designator	21	21
Connector Filter Type	77	79
Shell Finish	X	X
Shell Style	7	7
Shell Size & Insert Arrg	XX-XX	XX-XX
Type of Contact/ Keyway Position	X	X

* Printed Circuit Tail available. Consult Amphenol Aerospace factory for P/N. • "D" shaped mounting hole dimensions

Shell Size	A Dia• Max	B Thread Class 2A 0.1P-0.3L-TS (Plated)	H Hex +.017 –.016	R Thread Metric (Plated)	S ±.010	T• Dia +.010 –.000	V Thread Metric (Plated)	W +.011 –.010	Z• Flat +.000 –.010
9	1.199	.6250	.875	M17X1-6g0.100R	1.062	.697	M12X1-6g0.100R	.871	.669
11	1.386	.7500	1.000	M20X1-6g0.100R	1.250	.822	M15X1-6g0.100R	.871	.769
13	1.511	.8750	1.188	M25X1-6g0.100R	1.375	1.007	M18X1-6g0.100R	.878	.955
15	1.636	1.0000	1.312	M28X1-6g0.100R	1.500	1.134	M22X1-6g0.100R	.878	1.084
17	1.761	1.1875	1.438	M32X1-6g0.100R	1.625	1.259	M25X1-6g0.100R	.878	1.208
19	1.949	1.2500	1.562	M35X1-6g0.100R	1.812	1.384	M28X1-6g0.100R	.878	1.333
21	2.073	1.3750	1.688	M38X1-6g0.100R	1.938	1.507	M31X1-6g0.100R	.878	1.459
23	2.199	1.5000	1.812	M41X1-6g0.100R	2.062	1.634	M34X1-6g0.100R	.878	1.575
25	2.323	1.6250	2.000	M44X1-6g0.100R	2.188	1.759	M37X1-6g0.100R	.878	1.709

(Extended length shell**)

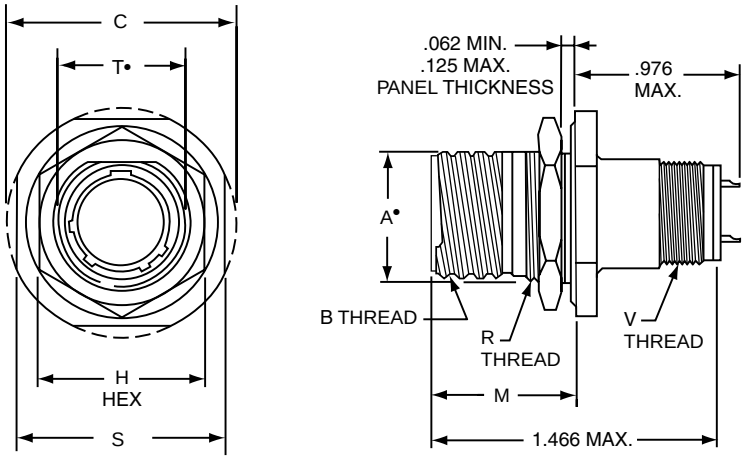

21-52X7

PART #

To complete, see how to order pages 288-289.

Filter Connector Designator	21
Connector Filter Type	52
Shell Finish	X
Shell Style	7
Shell Size & Insert Arrg	XX-XX
Type of Contact/ Keyway Position	X

• "D" shaped mounting hole dimensions

Shell Size	A• +.000 –.010	B Thread Class 2A 0.1P-0.3L-TS (Plated)	C Max	H Hex +.017 –.016	M +.011 –.010	R Thread (Plated)	S +.011 –.010	T• +.010 –.000	V Thread Metric (Plated)
9	.669	.6250	1.199	.875	.871	M17X1-6g0.100R	1.062	.697	M12X1-6g0.100R
11	.769	.7500	1.386	1.000	.871	M20X1-6g0.100R	1.250	.822	M15X1-6g0.100R
13	.955	.8750	1.511	1.188	.878	M25X1-6g0.100R	1.375	1.007	M18X1-6g0.100R
15	1.084	1.0000	1.636	1.312	.878	M28X1-6g0.100R	1.500	1.134	M22X1-6g0.100R
17	1.208	1.1875	1.761	1.438	.878	M32X1-6g0.100R	1.625	1.259	M25X1-6g0.100R
19	1.333	1.2500	1.949	1.562	.878	M35X1-6g0.100R	1.812	1.384	M28X1-6g0.100R
21	1.459	1.3750	2.073	1.688	.878	M38X1-6g0.100R	1.938	1.507	M31X1-6g0.100R
23	1.575	1.5000	2.199	1.812	.878	M41X1-6g0.100R	2.062	1.634	M34X1-6g0.100R
25	1.709	1.6250	2.323	2.000	.878	M44X1-6g0.100R	2.188	1.759	M37X1-6g0.100R

**Extended length to accommodate higher voltage and/or higher capacitance applications

Plug movement required to clear FTV receptacles: .625 min.

All dimensions for reference only.

FTV – MIL-DTL-38999, Series III

Jam Nut Receptacle - Aluminum

(UTS Crimp)

PART # To complete, see how to order pages 288-289.

Filter Connector Designator	Connector Filter Type	Shell Finish	Shell Style	Shell Size & Insert Arrg	Type of Contact/ Keyway Position
21	50	X	7	XX-XX	X

UTS (Crimp) Contact SAE AS39029/57

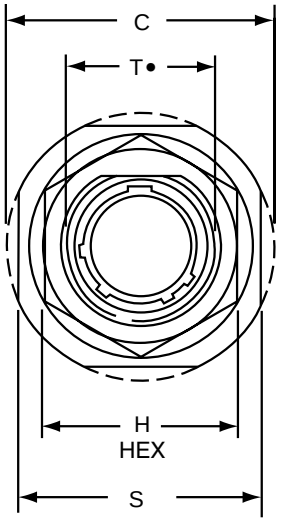

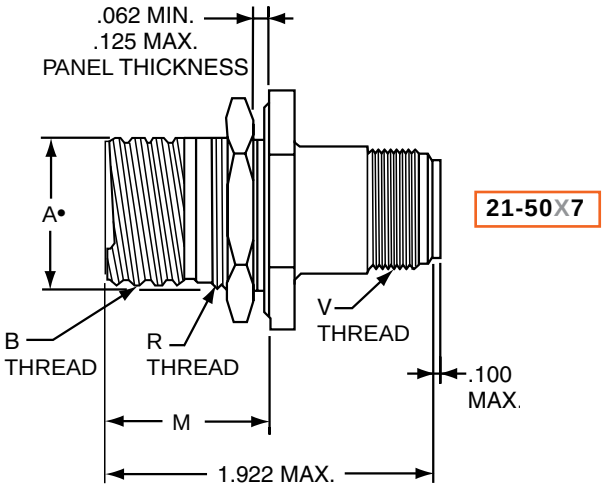

• "D" shaped mounting hole dimensions

Shell Size	A• +.000 –.010	B Thread Class 2A 0.1P-0.3L-TS (Plated)	C Max	H Hex +.017 –.016	M ±.005	R Thread (Plated)	S +.011 –.010	T• +.010 –.000	V Thread Metric (Plated)
9	.669	.6250	1.199	.875	.871	M17X1-6g0.100R	1.062	.697	M15X1-6g0.100R
11	.769	.7500	1.386	1.000	.871	M20X1-6g0.100R	1.250	.822	M18X1-6g0.100R
13	.955	.8750	1.511	1.188	.878	M25X1-6g0.100R	1.375	1.007	M22X1-6g0.100R
15	1.084	1.0000	1.636	1.312	.878	M28X1-6g0.100R	1.500	1.134	M25X1-6g0.100R
17	1.208	1.1875	1.761	1.438	.878	M32X1-6g0.100R	1.625	1.259	M28X1-6g0.100R
19	1.333	1.2500	1.949	1.562	.878	M35X1-6g0.100R	1.812	1.384	M31X1-6g0.100R
21	1.459	1.3750	2.073	1.688	.878	M38X1-6g0.100R	1.938	1.507	M34X1-6g0.100R
23	1.575	1.5000	2.199	1.812	.878	M41X1-6g0.100R	2.062	1.634	M37X1-6g0.100R
25	1.709	1.6250	2.323	2.000	.878	M44X1-6g0.100R	2.188	1.759	M41X1-6g0.100R

All dimensions for reference only.

Plug movement required to clear FTV receptacles: .625 min.

(Printed Circuit Board Mount)

PART # To complete, see how to order pages 288-289.

Filter Connector Designator	Connector Filter Type	Shell Finish	Shell Style	Shell Size & Insert Arrg	Type of Contact/ Keyway Position
21	80	X	2	XX-XX	X

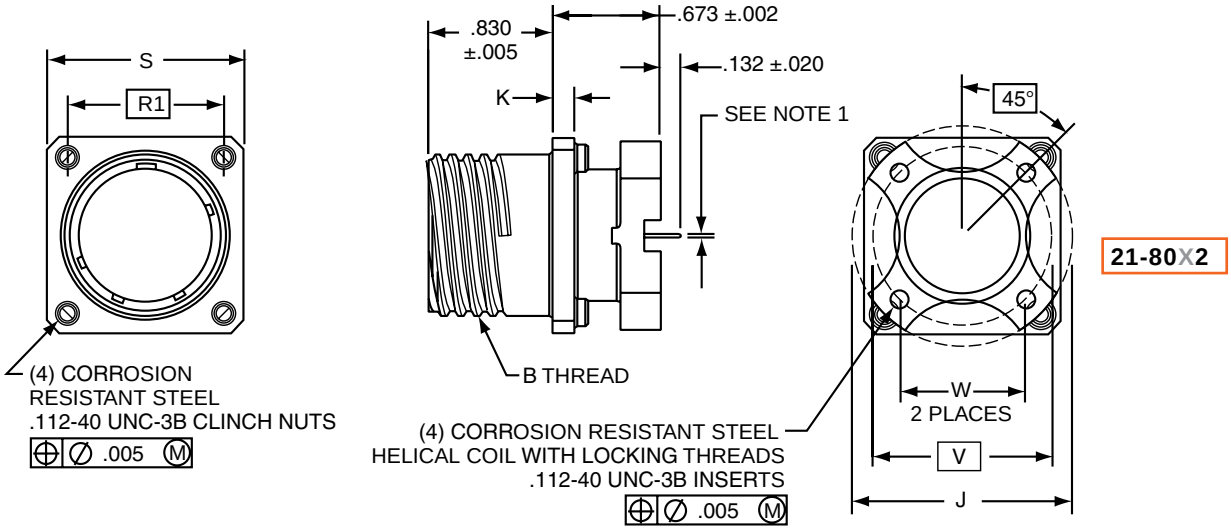

Note 1. Standard tail for size 22 is .020 ±.001.
Standard tail for size 20 is 030 ±.001.

Shell Size	B Thread Class 2A 0.1P-0.3L-TS (Plated)	J Dia. ±.005	K ±.005	R[1] TP	S ±.010	PCB Mounting Dimensions	
						W TP	V Dia. TP
9	.6250	1.016	.085	.719	.938	.532	.752
11	.7500	1.062	.085	.812	1.031	.601	.850
13	.8750	1.250	.085	.906	1.125	.703	.994
15	1.0000	1.375	.085	.969	1.219	.791	1.119
17	1.1875	1.500	.085	1.062	1.312	.875	1.237
19	1.2500	1.625	.085	1.156	1.438	.975	1.379
21	1.3750	1.750	.115	1.250	1.562	1.053	1.489
23	1.5000	1.875	.115	1.375	1.688	1.145	1.619
25	1.6250	2.000	.115	1.500	1.812	1.233	1.744

All dimensions for reference only.

(Printed Circuit Board Mount)

PART # **To complete, see how to order pages 288-289.**

Filter Connector Designator	Connector Filter Type	Shell Finish	Shell Style	Shell Size & Insert Arrg	Type of Contact/ Keyway Position
21	80	X	7	XX-XX	X

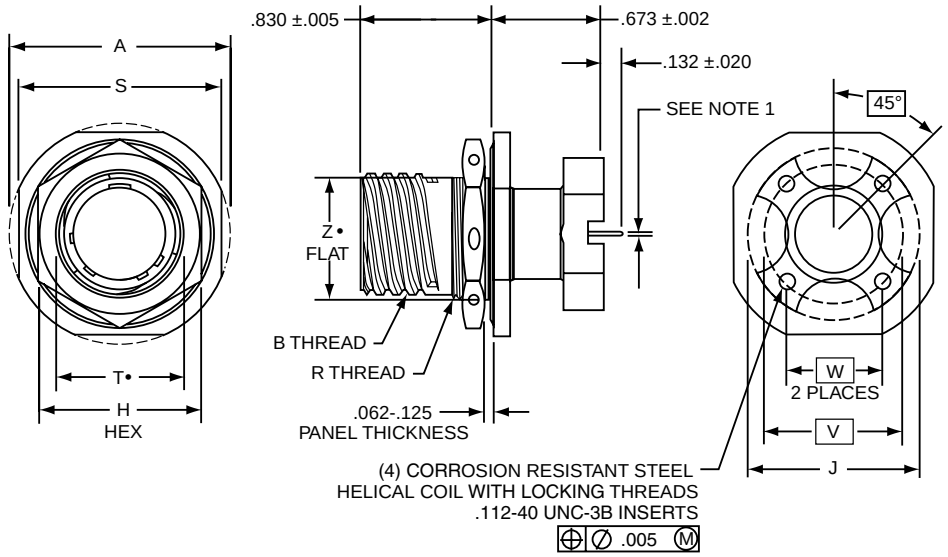

21-80X7

Note 1. Standard tail for size 22 is .020 ±.001.
Standard tail for size 20 is .030 ±.001.

• "D" shaped mounting hole dimensions

Shell Size	A Dia. ±.010	B Thread Class 2A 0.1P-0.3L-TS (Plated)	H Hex +.017 –.016	J Dia. ±.005	R Thread Metric (Plated)	S ±.015	T• Dia. +.010 –.000	PCB Mounting Dimensions W TP	PCB Mounting Dimensions V Dia. TP	Z• Flat +.000 –.010
9	1.188	.6250	.875	1.016	M17X1-6g0.100R	1.062	.697	.532	.752	.669
11	1.375	.7500	1.000	1.062	M20X1-6g0.100R	1.250	.822	.601	.850	.769
13	1.500	.8750	1.188	1.250	M25X1-6g0.100R	1.375	1.007	.703	.994	.955
15	1.625	1.0000	1.312	1.375	M28X1-6g0.100R	1.500	1.134	.791	1.119	1.084
17	1.750	1.1875	1.438	1.500	M32X1-6g0.100R	1.625	1.259	.875	1.237	1.208
19	1.937	1.2500	1.562	1.625	M35X1-6g0.100R	1.812	1.384	.975	1.379	1.333
21	2.062	1.3750	1.688	1.750	M38X1-6g0.100R	1.937	1.507	1.053	1.489	1.459
23	2.188	1.5000	1.812	1.875	M41X1-6g0.100R	2.062	1.634	1.145	1.619	1.575
25	2.312	1.6250	2.000	2.000	M44X1-6g0.100R	2.188	1.759	1.233	1.744	1.709

All dimensions for reference only.

The Amphenol® FJT Series space and weight saving design, coupled with a filter, gives high reliability.

- Intermateable with MIL-DTL-38999/27599 Series II connectors (see section Series II JT)
- Quick positive coupling – 3 point bayonet locking
- Error-proof alternate positioning of shell keyways
- Higher reliability and greater durability with permanently encapsulated contacts
- Environmental resistant
- Aluminum shells with several finish options

FJT Master Key/Keyway Rotation

Shell Size	AB Angle of Rotation (Degrees)				
	Normal	A	B	C	D
8	100	82	–	–	118
10	100	86	72	128	114
12	100	80	68	132	120
14	100	79	66	134	121
16	100	82	70	130	118
18	100	82	70	130	118
20	100	82	70	130	118
22	100	85	74	126	115
24	100	85	74	126	115

A plug with a given rotation letter will mate with a receptacle with the same rotation letter. The AB angle for a given connector is the same whether it contains pins or sockets. Inserts are not rotated in conjunction with the master key/keyway.

AB angles shown are viewed from the front face of the connector. A receptacle is shown at right. The angles for the plug are exactly the same, except the direction of rotation is opposite of that shown for the receptacle.

FJT

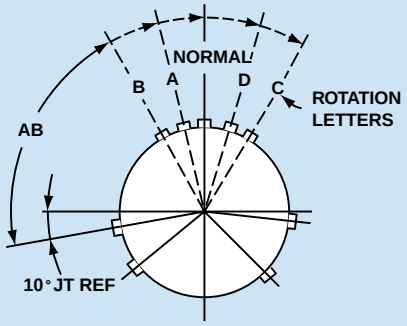

RELATIVE POSSIBLE POSITION OF ROTATED MASTER KEYWAY (front face of receptacle shown)

PART #

To complete, see how to order pages 288-289.

Filter Connector Designator	Connector Filter Type	Shell Finish	Shell Style	Shell Size & Insert Arrg	Type of Contact/ Keyway Position
21	24	X	0	XX-XX	X
21	32	X	0	XX-XX	X
21	37	X	0	XX-XX	X

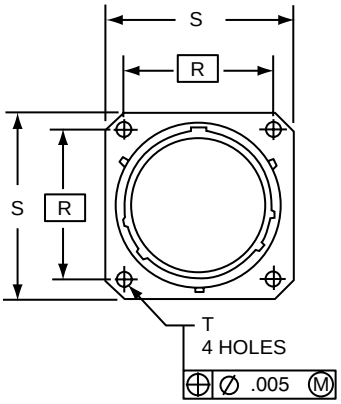

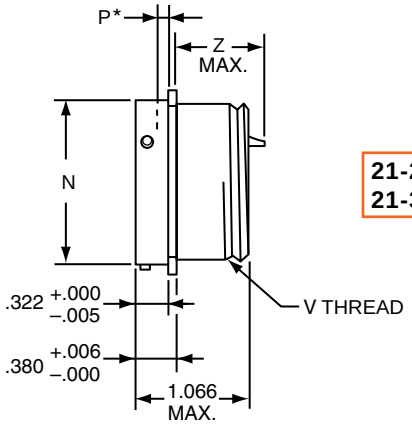

21-24X0 (MS27334)
21-32X0 (MS27334)

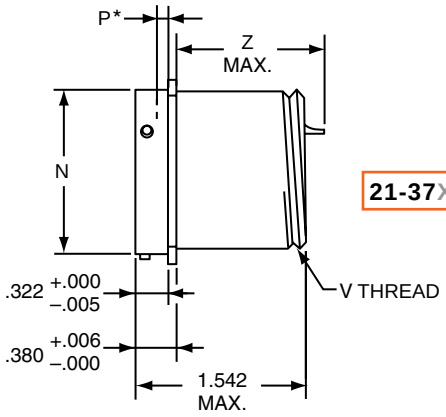

21-37X0 (MS27334)

Plug movement required to clear FJT receptacles: .281 min.
* Acceptable panel thickness for back panel mounting a standard receptacle.

Shell Size	N Dia +.001 –.005	P* Max.	R (TP)	S +.011 –.010	T Dia. ±.005	V Thread UNEF-2A (Plated)	SHORT SHELL VHF/UHF/MF Filters			LONG SHELL HF Filters	
							Size 20 Contact Z Max.	Size 16 or 16 & 20 Contacts Z Max.	Size 22 Contact Z Max.	Size 20 Contact Z Max.	Size 16 or 16 & 20 Contacts Z Max.
8	.473	.022	.594	.812	.120	.4375-28	.937	.952	.902	1.300	1.496
10	.590	.027	.719	.938	.120	.5625-24	.937	.952	.902	1.300	1.496
12	.750	.027	.812	1.031	.120	.6875-24	.937	.952	.902	1.300	1.496
14	.875	.027	.906	1.125	.120	.8125-20	.937	.952	.902	1.300	1.496
16	1.000	.027	.969	1.219	.120	.9375-20	.937	.952	.902	1.300	1.496
18	1.125	.027	1.062	1.312	.120	1.0625-18	.937	.952	.902	1.300	1.496
20	1.250	.054	1.156	1.438	.120	1.1875-18	.937	.952	.902	1.300	1.496
22	1.375	.054	1.250	1.562	.120	1.3125-18	.937	.952	.902	1.300	1.496
24	1.500	.054	1.375	1.688	.147	1.4375-18	.937	.952	.902	1.300	1.496

All dimensions for reference only.

FJTP – MIL-DTL-38999, Series II
Wall Mounting Receptacle - Aluminum
(Back Panel Mounting)

PART #

To complete, see how to order pages 288-289.

Filter Connector Designator	Connector Filter Type	Shell Finish	Shell Style	Shell Size & Insert Arrg	Type of Contact/ Keyway Position
21	34	X	0	XX-XX	X
21	39	X	0	XX-XX	X
21	38	X	0	XX-XX	X

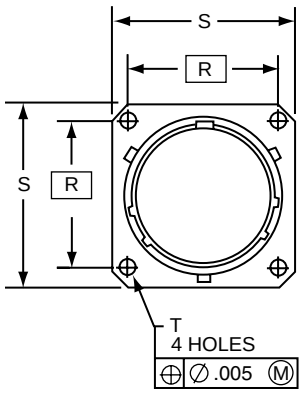

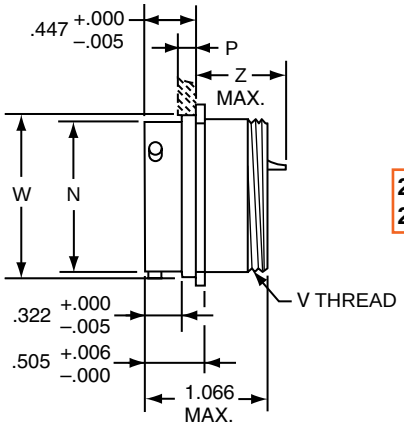

21-34X0 (MS27497)
21-39X0 (MS27497)

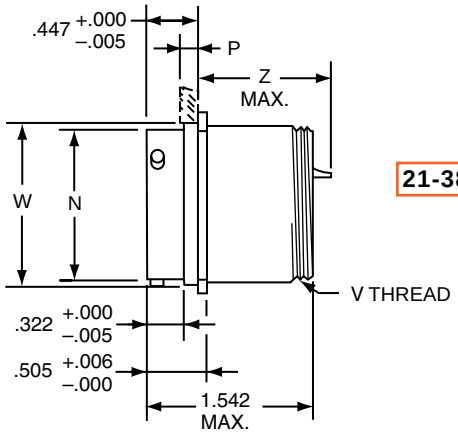

21-38X0 (MS27497)

Plug movement required to clear FJT receptacles: .281 min.

Shell Size	N Dia +.001 –.005	P Max. Panel Thickness	R (TP)	S +.011 –.010	T Dia. ±.005	V Thread UNEF-2A (Plated)	W Dia. +.001 –.005	SHORT SHELL VHF/UHF/MF Filters		LONG SHELL HF Filters	
								Size 16 or 16 & 20 Contacts Z Max.	Size 20 or 22 Contact Z Max.	Size 16 or 16 & 20 Contacts Z Max.	Size 20 Contact Z Max.
8	.473	.147	.594	.812	.120	.4375-28	.516	.900	.875	1.385	1.285
10	.590	.152	.719	.938	.120	.5625-24	.633	.900	.875	1.385	1.285
12	.750	.152	.812	1.031	.120	.6875-24	.802	.900	.875	1.385	1.285
14	.875	.152	.906	1.125	.120	.8125-20	.927	.900	.875	1.385	1.285
16	1.000	.152	.969	1.219	.120	.9375-20	1.052	.900	.875	1.385	1.285
18	1.125	.152	1.062	1.312	.120	1.0625-18	1.177	.900	.875	1.385	1.285
20	1.250	.179	1.156	1.438	.120	1.1875-18	1.302	.900	.875	1.385	1.285
22	1.375	.179	1.250	1.562	.120	1.3125-18	1.427	.900	.875	1.385	1.285
24	1.500	.179	1.375	1.688	.147	1.4375-18	1.552	.900	.875	1.385	1.285

All dimensions for reference only.

PART #

To complete, see how to order pages 288-289.

Filter Connector Designator	Connectoe Filter Type	Shell Finish	Shell Style	Shell Size & Insert Arrg	Type of Contact/ Keyway Position
21	24	X	2	XX-XX	X
21	32	X	2	XX-XX	X
21	37	X	2	XX-XX	X

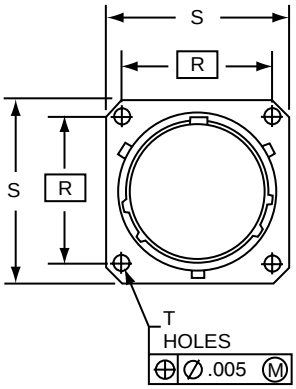

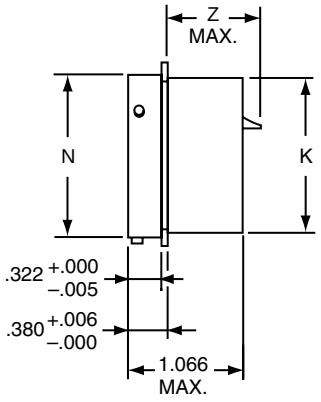

21-24X2 (MS27335)
21-32X2 (MS27335)

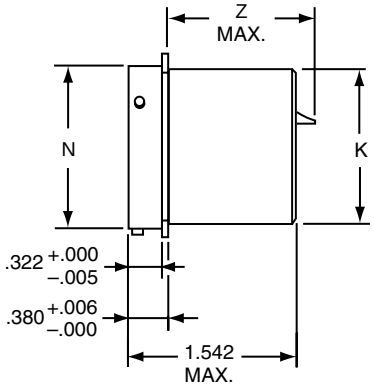

21-37X2 (MS27335)

Plug movement required to clear FJT receptacles: .281 min.

Shell Size	K Dia. +.000 –.007	N Dia +.001 –.005	R (TP)	S +.011 –.010	T Dia. ±.005	SHORT SHELL VHF/UHF/MF Filters			LONG SHELL HF Filters	
						Size 20 Contact Z Max.	Size 16 or 16 & 20 Contacts Z Max.	Size 22 Contact Z Max.	Size 20 Contact Z Max.	Size 16 or 16 & 20 Contacts Z Max.
8	.438	.473	.594	.812	.120	.937	.952	.902	1.300	1.496
10	.562	.590	.719	.938	.120	.937	.952	.902	1.300	1.496
12	.688	.750	.812	1.031	.120	.937	.952	.902	1.300	1.496
14	.812	.875	.906	1.125	.120	.937	.952	.902	1.300	1.496
16	.938	1.000	.969	1.219	.120	.937	.952	.902	1.300	1.496
18	1.062	1.125	1.062	1.312	.120	.937	.952	.902	1.300	1.496
20	1.188	1.250	1.156	1.438	.120	.937	.952	.902	1.300	1.496
22	1.312	1.375	1.250	1.562	.120	.937	.952	.902	1.300	1.496
24	1.438	1.500	1.375	1.688	.147	.937	.952	.902	1.300	1.496

All dimensions for reference only.

FJTP – MIL-DTL-38999, Series II

Box Mounting Receptacle - Aluminum

(Back Panel Mounting)

PART #

To complete, see how to order pages 288-289.

Filter Connector Designator	Connector Filter Type	Shell Finish	Shell Style	Shell Size & Insert Arrg	Type of Contact/ Keyway Position
21	34	X	2	XX-XX	X
21	39	X	2	XX-XX	X
21	38	X	2	XX-XX	X

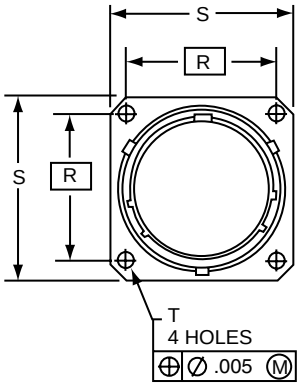

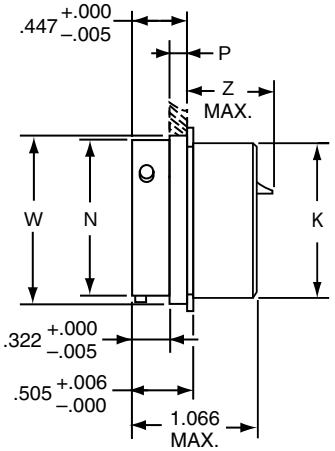

21-34X2 (MS27508)
21-39X2 (MS27508)

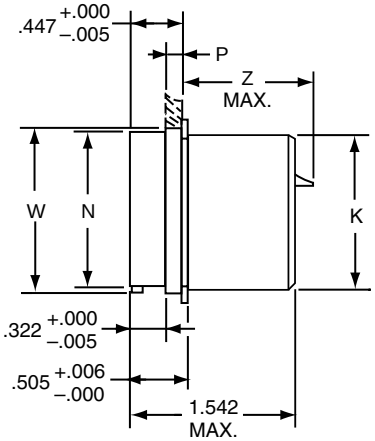

21-38X2 (MS27508)

Plug movement required to clear FJT receptacles: .281 min.

Shell Size	K Dia. +.000 –.007	N Dia +.001 –.005	P Max. Panel Thickness	R (TP)	S +.011 –.010	T Dia. ±.005	W Dia. +.001 –.005	SHORT SHELL VHF/UHF/MF Filters		LONG SHELL HF Filters	
								Size 16 or 16 & 20 Contacts Z Max.	Size 20 or 22 Contact Z Max.	Size 16 or 16 & 20 Contacts Z Max.	Size 20 Contact Z Max.
8	.438	.473	.147	.594	.812	.120	.516	.900	.875	1.385	1.285
10	.562	.590	.152	.719	.938	.120	.633	.900	.875	1.385	1.285
12	.688	.750	.152	.812	1.031	.120	.802	.900	.875	1.385	1.285
14	.812	.875	.152	.906	1.125	.120	.927	.900	.875	1.385	1.285
16	.938	1.000	.152	.969	1.219	.120	1.052	.900	.875	1.385	1.285
18	1.062	1.125	.152	1.062	1.312	.120	1.177	.900	.875	1.385	1.285
20	1.188	1.250	.179	1.156	1.438	.120	1.302	.900	.875	1.385	1.285
22	1.312	1.375	.179	1.250	1.562	.120	1.427	.900	.875	1.385	1.285
24	1.438	1.500	.179	1.375	1.688	.147	1.552	.900	.875	1.385	1.285

All dimensions for reference only.

PART #
To complete, see how to order pages 288-289.

Filter Connector Designator	Connector Filter Type	Shell Finish	Shell Style	Shell Size & Insert Arrg	Type of Contact/ Keyway Position
21	24	X	7	XX-XX	X
21	32	X	7	XX-XX	X
21	37	X	7	XX-XX	X

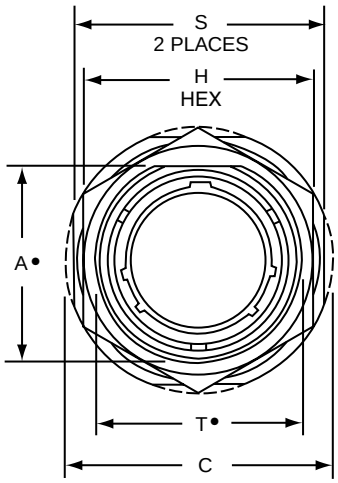

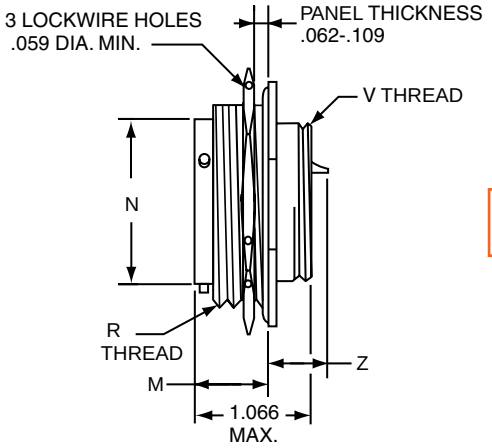

21-24X7 (MS27337)
21-32X7 (MS27337)

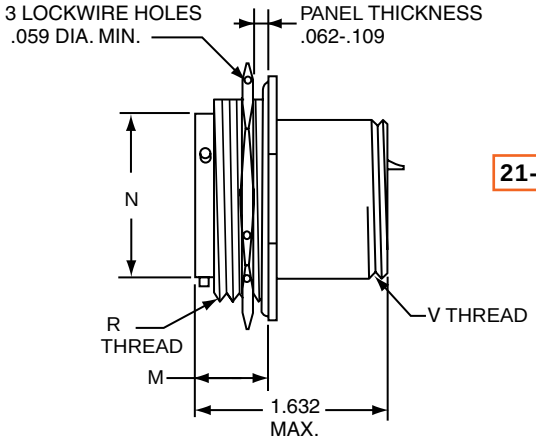

21-37X7 (MS27337)

• "D" shaped mounting hole dimensions
Plug movement required to clear FJT receptacles: .281 min.

Shell Size	A• Flat +.000 –.010	C Dia. +.011 –.010	H Hex +.017 –.016	M ±.005	N Dia +.001 –.005	R Thread (Plated) Class -2A	S ±.010	T• Dia. +.010 –.000	V Thread UNEF-2A (Plated)	SHORT SHELL VHF/UHF/MF Filters			LONG SHELL HF Filters	
										Size 16 or 16 & 20 Contacts Z Max.	Size 20 Contact Z Max.	Size 22 Contact Z Max.	Size 16 or 16 & 20 Contacts Z Max.	Size 20 Contact Z Max.
8	.830	1.375	1.062	.438	.473	.8750-20UNEF	1.250	.884	.4375-28	.900	.884	.849	1.443	1.276
10	.955	1.500	1.188	.438	.590	1.0000-20UNEF	1.375	1.007	.5625-24	.900	.884	.849	1.443	1.276
12	1.084	1.625	1.312	.438	.750	1.1250-18UNEF	1.500	1.134	.6875-24	.900	.884	.849	1.443	1.276
14	1.208	1.750	1.438	.438	.875	1.2500-18UNEF	1.625	1.259	.8125-20	.900	.884	.849	1.443	1.276
16	1.333	1.938	1.562	.438	1.000	1.3750-18UNEF	1.781	1.384	.9375-20	.900	.884	.849	1.443	1.276
18	1.459	2.016	1.688	.438	1.125	1.5000-18UNEF	1.890	1.507	1.0625-18	.900	.884	.849	1.443	1.276
20	1.576	2.141	1.812	.464	1.250	1.6250-18UNEF	2.016	1.634	1.1875-18	.874	.858	.823	1.443	1.276
22	1.701	2.265	2.000	.464	1.375	1.7500-18UNS	2.140	1.759	1.3125-18	.874	.858	.823	1.417	1.250
24	1.826	2.390	2.125	.464	1.500	1.8750-16UN	2.265	1.884	1.4375-18	.874	.858	.823	1.417	1.250

All dimensions for reference only.

(Minimum Penetration)

PART #

To complete, see how to order pages 288-289.

Filter Connector Designator	Connector Filter Type	Shell Finish	Shell Style	Shell Size & Insert Arrg	Type of Contact/ Keyway Position
21	24	X	4	XX-XX	X
21	32	X	4	XX-XX	X
21	37	X	4	XX-XX	X

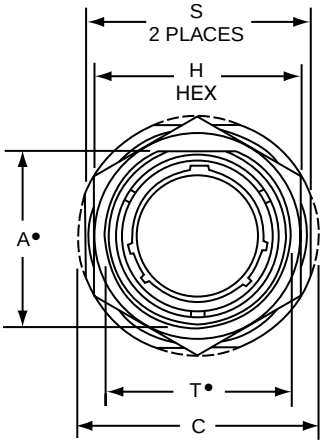

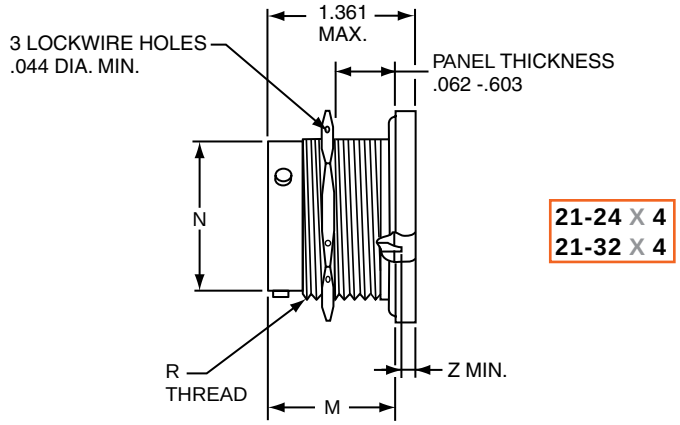

21-24 X 4
21-32 X 4

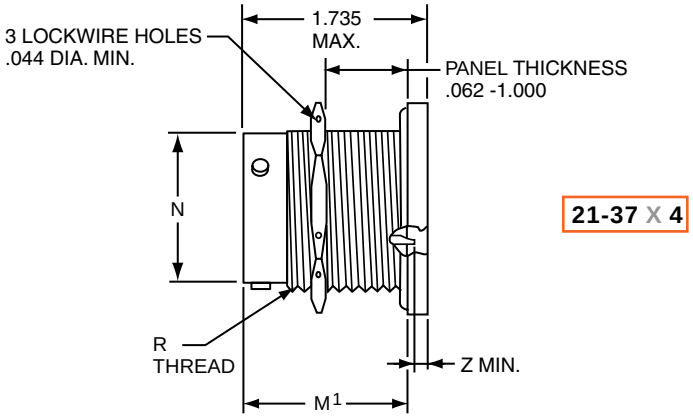

21-37 X 4

• "D" shaped mounting hole dimensions
Plug movement required to clear FJT receptacles: .281 min.

Shell Size	A• Flat +.000 –.010	C Dia. +.011 –.010	H Hex +.017 –.016	M ±.005	M1 ±.005	N Dia +.001 –.005	R Thread UNEF-2A (Plated)	S +.011 –.010	T• Dia. +.010 –.000	SHORT SHELL VHF/UHF/MF Filters			LONG SHELL HF Filters	
										Size 16 or 16 & 20 Contacts Z Max.	Size 20 Contact Z Max.	Size 22 Contact Z Max.	Size 16 or 16 & 20 Contacts Z Max.	Size 20 Contact Z Max.
8	.542	1.062	.750	1.220	1.594	.473	.5625-24	.938	.572	.000	.022	.057	.000	.000
10	.669	1.188	.875	1.220	1.594	.590	.6875-24	1.062	.697	.000	.022	.057	.000	.000
12	.830	1.375	1.062	1.220	1.594	.750	.8750-20	1.250	.844	.000	.022	.057	.000	.000
14	.955	1.500	1.188	1.220	1.594	.875	1.0000-20	1.375	1.007	.000	.022	.057	.000	.000
16	1.084	1.625	1.312	1.220	1.594	1.000	1.1250-18	1.500	1.134	.000	.022	.057	.000	.000
18	1.208	1.750	1.438	1.220	1.594	1.125	1.2500-18	1.625	1.259	.000	.022	.057	.000	.000
20	1.333	1.938	1.562	1.188	1.563	1.250	1.3750-18	1.812	1.384	.000	.022	.057	.000	.000
22	1.459	2.062	1.688	1.188	1.563	1.375	1.5000-18	1.938	1.507	.000	.022	.057	.000	.000
24	1.575	2.188	1.812	1.188	1.563	1.500	1.6250-18	2.062	1.634	.000	.022	.057	.000	.000

All dimensions for reference only.

The Amphenol® FLJT Series offers all the design features of the FJT plus a 100% "scoop-proof" contact protection design.

- Intermountable with MIL-DTL-38999/27599 Series I connectors (see section Series I LJT)
- Contact Protection - shell design prevents contact damage
- Quick Positive Coupling – 3 point bayonet locking
- Higher reliability and greater durability with permanently encapsulated contacts
- Environmental Resistant
- Aluminum shells with several finish options
- Error-proof alternate positioning of shell keyways
- Corrosion Resistant - 500 hour salt spray olive drab cadmium over nickel plating, class T (aluminum), electroless nickel plating, class F (aluminum) or stainless steel shells

FLJT

FLJT Master Key/Keyway Rotation

Shell Size	AB Angle of Rotation (Degrees)				
	Normal	A	B	C	D
9	95	77	–	–	113
11	95	81	67	123	109
13	95	75	63	127	115
15	95	74	61	129	116
17	95	77	65	125	113
19	95	77	65	125	113
21	95	77	65	125	113
23	95	80	69	121	110
25	95	80	69	121	110

A plug with a given rotation letter will mate with a receptacle with the same rotation letter. The AB angle for a given connector is the same whether it contains pins or sockets. Inserts are not rotated in conjunction with the master key/keyway.

AB angles shown are viewed from the front face of the connector. A receptacle is shown at right. The angles for the plug are exactly the same, except the direction of rotation is opposite of that shown for the receptacle.

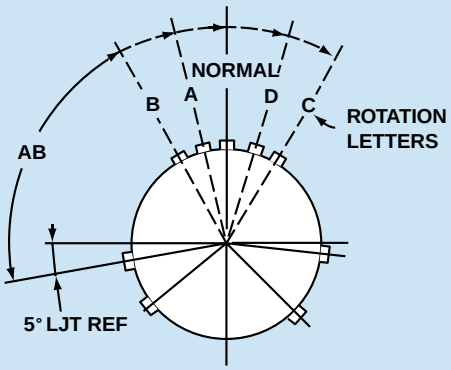

RELATIVE POSSIBLE POSITION
OF ROTATED MASTER KEYWAY
(front face of receptacle shown)

Amphenol Aerospace

PART #

To complete, see how to order pages 288-289.

Filter Connector Designator	Connector Filter Type	Shell Finish	Shell Style	Shell Size & Insert Arrg	Type of Contact/ Keyway Position
21	29	X	0	XX-XX	X
21	40	X	0	XX-XX	X
21	36	X	0	XX-XX	X

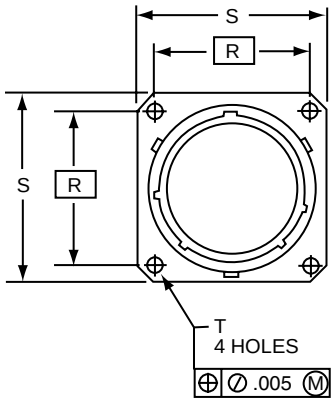

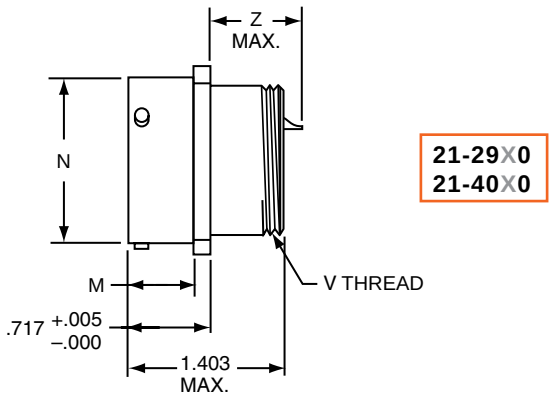

21-29X0
21-40X0

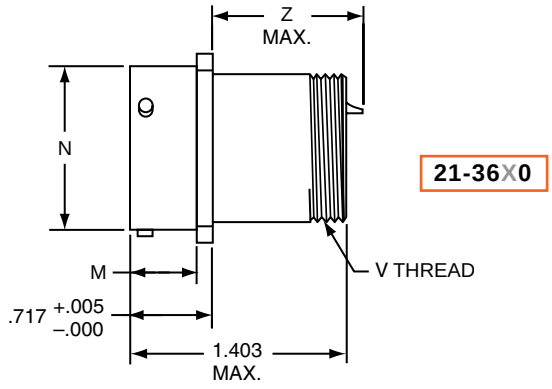

21-36X0

Plug movement required to clear FLJT receptacles: .625 min.

Shell Size	M +.000 –.006	N Dia. +.001 –.005	R (TP)	S +.011 –.010	T Dia. ±.005	V Thread UNEF-2A (Plated)	SHORT SHELL VHF/UHF/MF Filters			LONG SHELL HF Filters	
							Size 20 Contact Z Max.	Size 16 or 16 & 20 Contacts Z Max.	Size 22 Contact Z Max.	Size 20 Contact Z Max.	Size 16 or 16 & 20 Contacts Z Max.
9	.632	.572	.719	.938	.128	.4375-28	.865	.950	.820	1.324	1.394
11	.632	.700	.812	1.031	.128	.5625-24	.865	.950	.820	1.324	1.394
13	.632	.850	.906	1.125	.128	.6875-24	.865	.950	.820	1.324	1.394
15	.632	.975	.969	1.219	.128	.8125-20	.865	.950	.820	1.324	1.394
17	.632	1.100	1.062	1.312	.128	.9375-20	.865	.950	.820	1.324	1.394
19	.632	1.207	1.156	1.438	.128	1.0625-18	.865	.950	.820	1.324	1.394
21	.602	1.332	1.250	1.562	.128	1.1875-18	.865	.950	.820	1.324	1.394
23	.602	1.457	1.375	1.688	.147	1.3125-18	.865	.950	.820	1.324	1.394
25	.602	1.582	1.500	1.812	.147	1.4375-18	.865	.950	.820	1.324	1.394

All dimensions for reference only.

(Back Panel Mounting, UTS Crimp)

PART #
To complete, see how to order pages 288-289.

Filter Connector Designator	Connector Filter Type	Shell Finish	Shell Style	Shell Size & Insert Arrg	Type of Contact/ Keyway Position
21	47	X	0	XX-XX	X
21	48	X	0	XX-XX	X

UTS (Crimp) Contact SAE AS39029/57

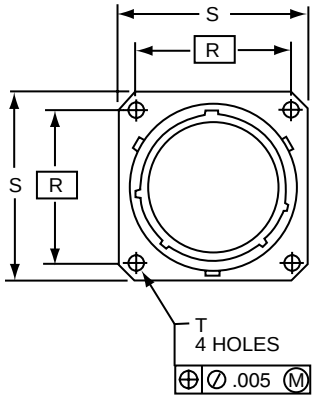

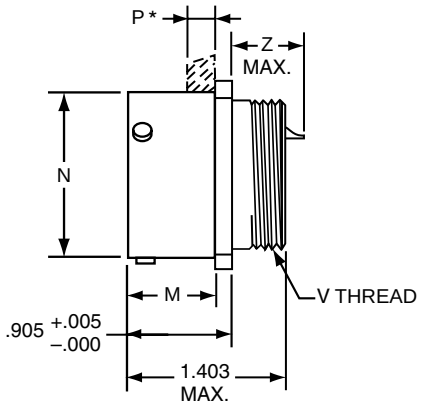

21-47X0

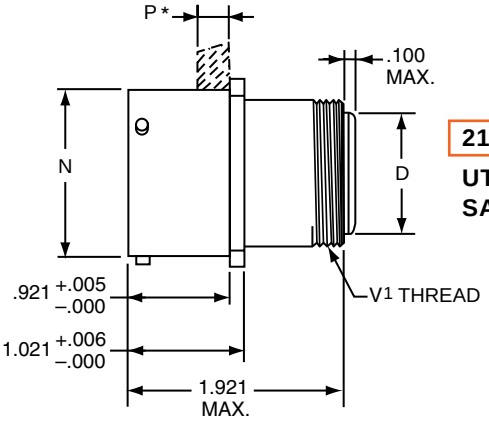

21-48X0

UTS (Crimp) Contact SAE AS39029/57

Plug movement required to clear FLJT receptacles: .625 min.
* Acceptable panel thickness for back panel mounting a standard receptacle.

Shell Size	D Dia. ±.005	M +.000 –.006	N Dia. +.001 –.005	P Max. Panel Thickness	R (TP)	S +.011 –.010	T Dia. ±.005	V Thread UNEF-2A (Plated)	V1 Thread UNEF-2A (Plated)	SHORT SHELL VHF/UHF Filters		
										Size 20 Contact Z Max.	Size 16 or 16 & 20 Contacts Z Max.	Size 22 Contact Z Max.
9	.299	.820	.572	.234	.719	.938	.128	.4375-28	.5625-24	.672	.763	.632
11	.427	.820	.700	.234	.812	1.031	.128	.5625-24	.6875-24	.672	.763	.632
13	.541	.820	.850	.234	.906	1.125	.128	.6875-24	.8125-20	.672	.763	.632
15	.666	.820	.975	.234	.969	1.219	.128	.8125-20	.9375-20	.672	.763	.632
17	.791	.820	1.100	.234	1.062	1.312	.128	.9375-20	1.0625-18	.672	.763	.632
19	.897	.820	1.207	.234	1.156	1.438	.128	1.0625-18	1.1875-18	.672	.763	.632
21	1.022	.790	1.332	.204	1.250	1.562	.128	1.1875-18	1.3125-18	.672	.763	.632
23	1.147	.790	1.457	.204	1.375	1.688	.147	1.3125-18	1.4375-18	.672	.763	.632
25	1.272	.790	1.582	.193	1.500	1.812	.147	1.4375-18	1.5625-18	.672	.763	.632

All dimensions for reference only.

PART #

To complete, see how to order pages 288-289.

Filter Connector Designator	Connector Filter Type	Shell Finish	Shell Style	Shell Size & Insert Arrg	Type of Contact/ Keyway Position
21	29	X	2	XX-XX	X
21	40	X	2	XX-XX	X
21	36	X	2	XX-XX	X

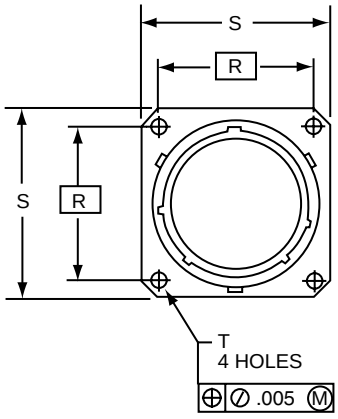

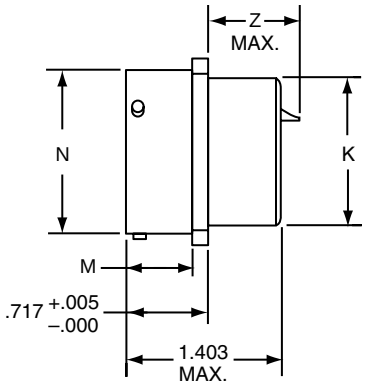

21-29X2
21-40X2

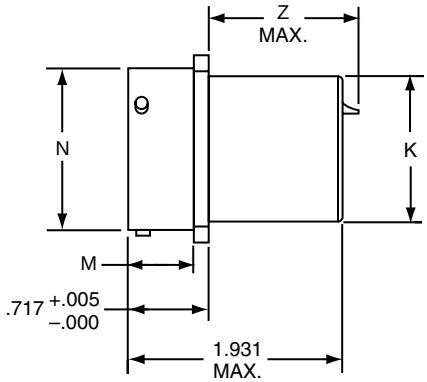

21-36X2

Plug movement required to clear FLJT receptacles: .625 min.

Shell Size	K Dia. +.001 –.006	M +.000 –.006	N Dia. +.001 –.005	R (TP)	S +.011 –.010	T Dia. ±.005	SHORT SHELL VHF/UHF/MF Filters			LONG SHELL HF Filters	
							Size 20 Contact Z Max.	Size 16 or 16 & 20 Contacts Z Max.	Size 22 Contact Z Max.	Size 20 Contact Z Max.	Size 16 or 16 & 20 Contacts Z Max.
9	.436	.632	.572	.719	.938	.128	.865	.950	.820	1.324	1.394
11	.560	.632	.700	.812	1.031	.128	.865	.950	.820	1.324	1.394
13	.686	.632	.850	.906	1.125	.128	.865	.950	.820	1.324	1.394
15	.810	.632	.975	.969	1.219	.128	.865	.950	.820	1.324	1.394
17	.936	.632	1.100	1.062	1.312	.128	.865	.950	.820	1.324	1.394
19	1.060	.632	1.207	1.156	1.438	.128	.865	.950	.820	1.324	1.394
21	1.186	.602	1.332	1.250	1.562	.128	.865	.950	.820	1.324	1.394
23	1.310	.602	1.457	1.375	1.688	.147	.865	.950	.820	1.324	1.394
25	1.436	.602	1.582	1.500	1.812	.147	.865	.950	.820	1.324	1.394

All dimensions for reference only.

(Back Panel Mounting, UTS Crimp)

PART #
To complete, see how to order pages 288-289.

Filter Connector Designator	Connector Filter Type	Shell Finish	Shell Style	Shell Size & Insert Arrg	Type of Contact/ Keyway Position
21	47	X	2	XX-XX	X
21	48	X	2	XX-XX	X

UTS (Crimp) Contact SAE AS39029

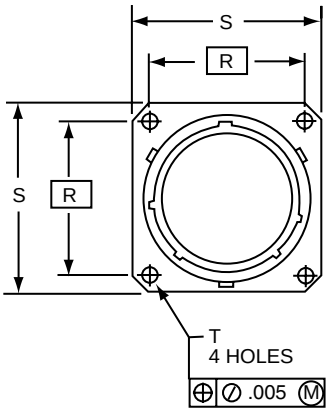

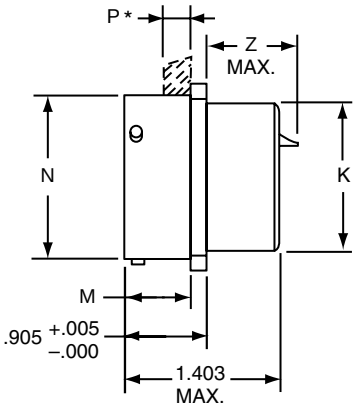

21-47X2

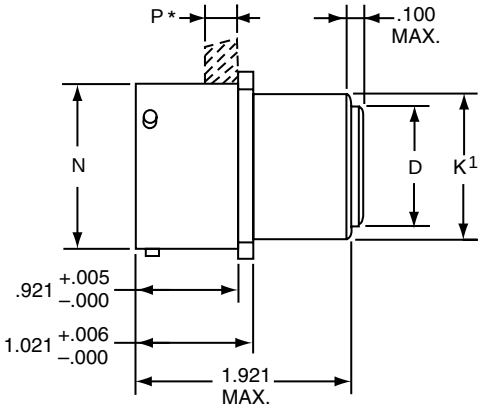

21-48X2
UTS (Crimp) Contact SAE AS39029

Plug movement required to clear FLJT receptacles: .625 min.
* Acceptable panel thickness for back panel mounting a standard receptacle.

Shell Size	D Dia. ±.005	K Dia. +.000 –.006	K¹ Dia. +.000 –.007	M +.000 –.006	N Dia. +.001 –.005	P Max. Panel Thickness	R (TP)	S +.011 –.010	T Dia. ±.005	SHORT SHELL VHF/UHF Filters		
										Size 20 Contact Z Max.	Size 16 or 16 & 20 Contacts Z Max.	Size 22 Contact Z Max.
9	.299	.437	.561	.820	.572	.234	.719	.938	.128	.672	.763	.632
11	.427	.562	.687	.820	.700	.234	.812	1.031	.128	.672	.763	.632
13	.541	.688	.811	.820	.850	.234	.906	1.125	.128	.672	.763	.632
15	.666	.812	.937	.820	.975	.234	.969	1.219	.128	.672	.763	.632
17	.791	.938	1.061	.820	1.100	.234	1.062	1.312	.128	.672	.763	.632
19	.897	1.062	1.187	.820	1.207	.234	1.156	1.438	.128	.672	.763	.632
21	1.022	1.188	1.312	.790	1.332	.204	1.250	1.562	.128	.672	.763	.632
23	1.147	1.312	1.437	.790	1.457	.204	1.375	1.688	.147	.672	.763	.632
25	1.272	1.438	1.562	.790	1.582	.193	1.500	1.812	.147	.672	.763	.632

All dimensions for reference only.

(Printed Circuit Board Mount)

PART # To complete, see how to order pages 288-289.

Filter Connector Designator	Connector Filter Type	Shell Finish	Shell Style	Shell Size & Insert Arrg	Type of Contact/ Keyway Position
21	57	X	2	XX-XX	X

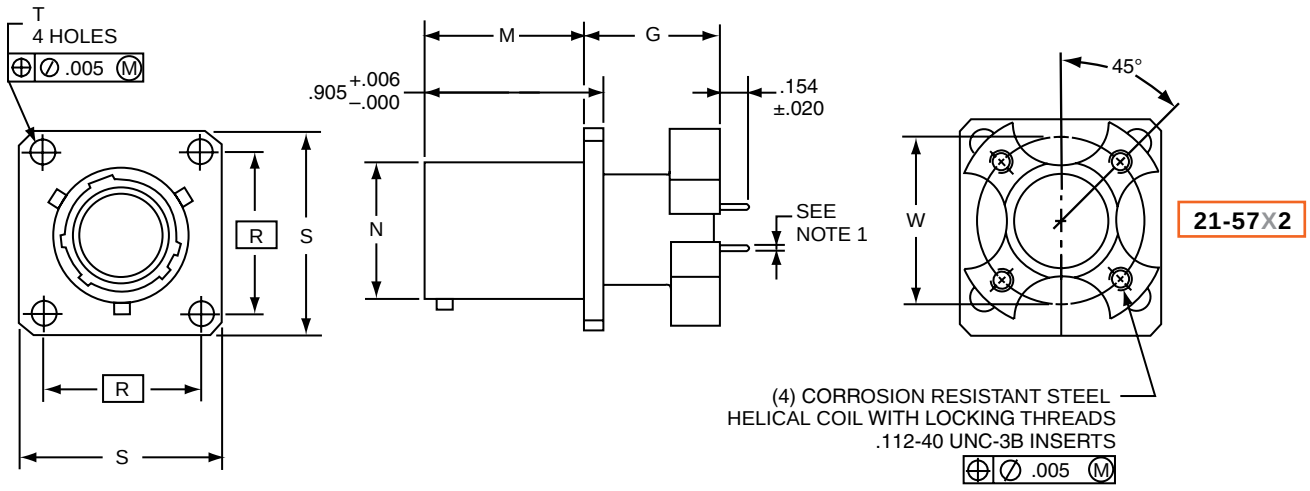

1. Standard tail for size 22 is .020 ±.001 dia.
   Standard tail for size 20 is .030 ±.001 dia.

Plug movement required to clear FLJT receptacles: .625 min.

Shell Size	G +.006 −.005	M +.000 −.005	N Dia. +.001 −.005	R (TP)	S +.011 −.010	T Dia. +.004 −.003	W
11	.689	.820	.700	.812	1.031	.128	.850
13	.689	.820	.850	.906	1.125	.128	.994
15	.689	.820	.975	.969	1.219	.128	1.119
17	.689	.820	1.100	1.062	1.312	.128	1.237
19	.689	.820	1.207	1.156	1.438	.128	1.379
21	.689	.790	1.332	1.250	1.562	.128	1.489
23	.719	.790	1.457	1.375	1.688	.147	1.619
25	.719	.790	1.582	1.500	1.812	.147	1.744

All dimensions for reference only.

PART #
To complete, see how to order pages 288-289.

Filter Connector Designator	Connector Filter Type	Shell Finish	Shell Style	Shell Size & Insert Arrg	Type of Contact/ Keyway Position
21	29	X	7	XX-XX	X
21	40	X	7	XX-XX	X
21	36	X	7	XX-XX	X

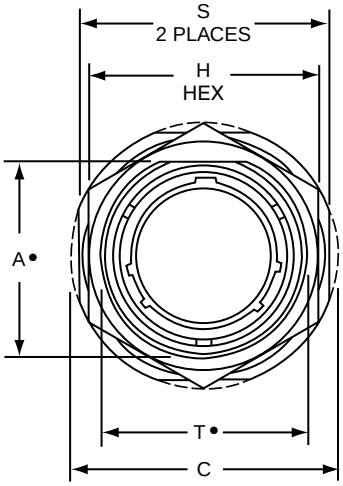

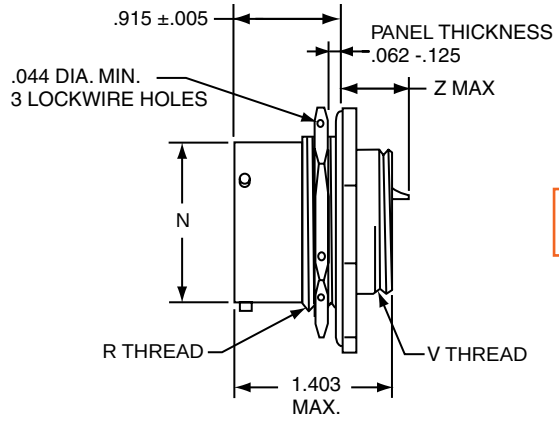

21-29X7
21-40X7

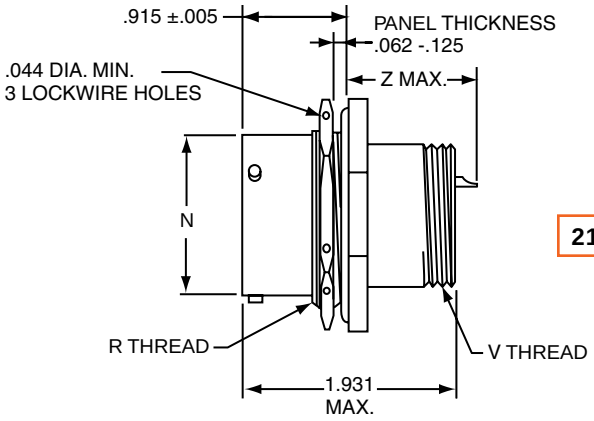

21-36X7

• "D" shaped mounting hole dimensions
Plug movement required to clear FLJT receptacles: .625 min.

Shell Size	A• Flat +.000 –.010	C Dia. +.011 –.010	H Hex +.017 –.016	N Dia +.001 –.005	R Thread (Plated) Class -2A	S +.016 –.015	T• Dia. +.010 –.000	V Thread UNEF-2A (Plated)	SHORT SHELL VHF/UHF/MF Filters			LONG SHELL HF Filters	
									Size 20 Contact Z Max.	Size 16 or 16 & 20 Contacts Z Max.	Size 22 Contact Z Max.	Size 20 Contact Z Max.	Size 16 or 16 & 20 Contacts Z Max.
9	.669	1.188	.875	.572	.6875-24UNEF	1.062	.697	.4375-28	.667	.756	.616	1.228	1.201
11	.769	1.375	1.000	.700	.8125-20UNEF	1.250	.822	.5625-24	.667	.756	.616	1.228	1.201
13	.955	1.500	1.188	.850	1.0000-20UNEF	1.375	1.007	.6875-24	.667	.756	.616	1.228	1.201
15	1.084	1.625	1.312	.975	1.1250-18UNEF	1.500	1.134	.8125-20	.667	.756	.616	1.228	1.201
17	1.208	1.750	1.438	1.100	1.2500-18UNEF	1.625	1.259	.9375-20	.667	.756	.616	1.228	1.201
19	1.333	1.938	1.562	1.207	1.3750-18UNEF	1.812	1.384	1.0625-18	.667	.756	.616	1.228	1.201
21	1.459	2.062	1.688	1.332	1.5000-18UNEF	1.938	1.507	1.1875-18	.667	.756	.616	1.228	1.201
23	1.580	2.188	1.812	1.457	1.6250-18UNEF	2.062	1.634	1.3125-18	.667	.756	.616	1.228	1.201
25	1.709	2.312	2.000	1.582	1.7500-18UNS	2.188	1.759	1.4375-18	.667	.756	.616	1.228	1.201

All dimensions for reference only.

PART # **To complete, see how to order pages 288-289.**

Filter Connector Designator	Connector Filter Type	Shell Finish	Shell Style	Shell Size & Insert Arrg	Type of Contact/ Keyway Position
21	48	X	7	XX-XX	X

UTS (Crimp) Contact SAE AS39029/57

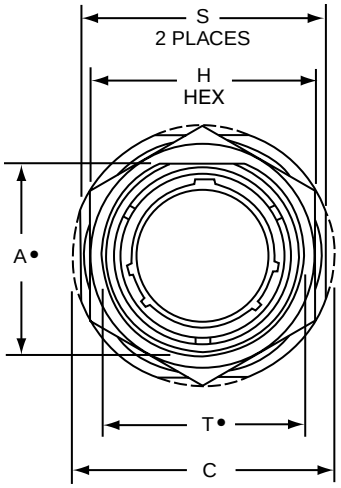

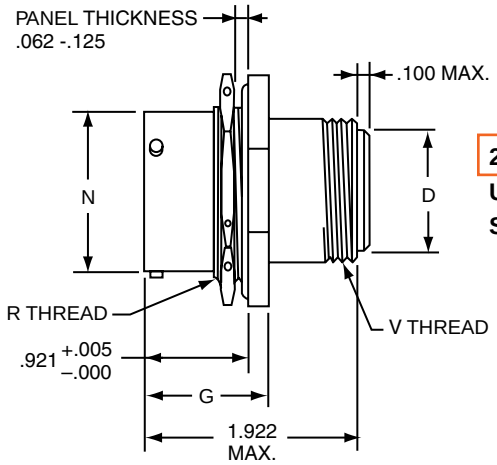

21-48X7
UTS (Crimp) Contact
SAE AS39029/57

• "D" shaped mounting hole dimensions
Plug movement required to clear FLJT receptacles: .625 min.

Shell Size	A• Flat +.000 −.010	C Dia. +.011 −.010	D Dia. ±.005	G +.006 −.005	H Hex +.017 −.016	N Dia +.001 −.005	R Thread (Plated) Class -2A	S +.016 −.015	T• Dia. +.010 −.000	V Thread UNEF-2A (Plated)
9	.669	1.188	.299	1.030	.875	.572	.6875-24UNEF	1.062	.697	.5625-24
11	.769	1.375	.427	1.030	1.000	.700	.8125-20UNEF	1.250	.822	.6875-24
13	.955	1.500	.541	1.030	1.188	.850	1.0000-20UNEF	1.375	1.007	.8125-20
15	1.084	1.625	.666	1.030	1.312	.975	1.1250-18UNEF	1.500	1.134	.9375-20
17	1.208	1.750	.791	1.030	1.438	1.100	1.2500-18UNEF	1.625	1.259	1.0625-18
19	1.333	1.938	.897	1.061	1.562	1.207	1.3750-18UNEF	1.812	1.384	1.1875-18
21	1.459	2.062	1.022	1.061	1.688	1.332	1.5000-18UNEF	1.938	1.507	1.3125-18
23	1.580	2.188	1.147	1.061	1.812	1.457	1.6250-18UNEF	2.062	1.634	1.4375-18
25	1.709	2.312	1.272	1.061	2.000	1.582	1.7500-18UNS	2.188	1.759	1.5625-18

All dimensions for reference only.

(Printed Circuit Board Mount)

PART #
To complete, see how to order pages 288-289.

Filter Connector Designator	Connector Filter Type	Shell Finish	Shell Style	Shell Size & Insert Arrg	Type of Contact/ Keyway Position
21	57	X	4	XX-XX	X
21	57	X	7	XX-XX	X

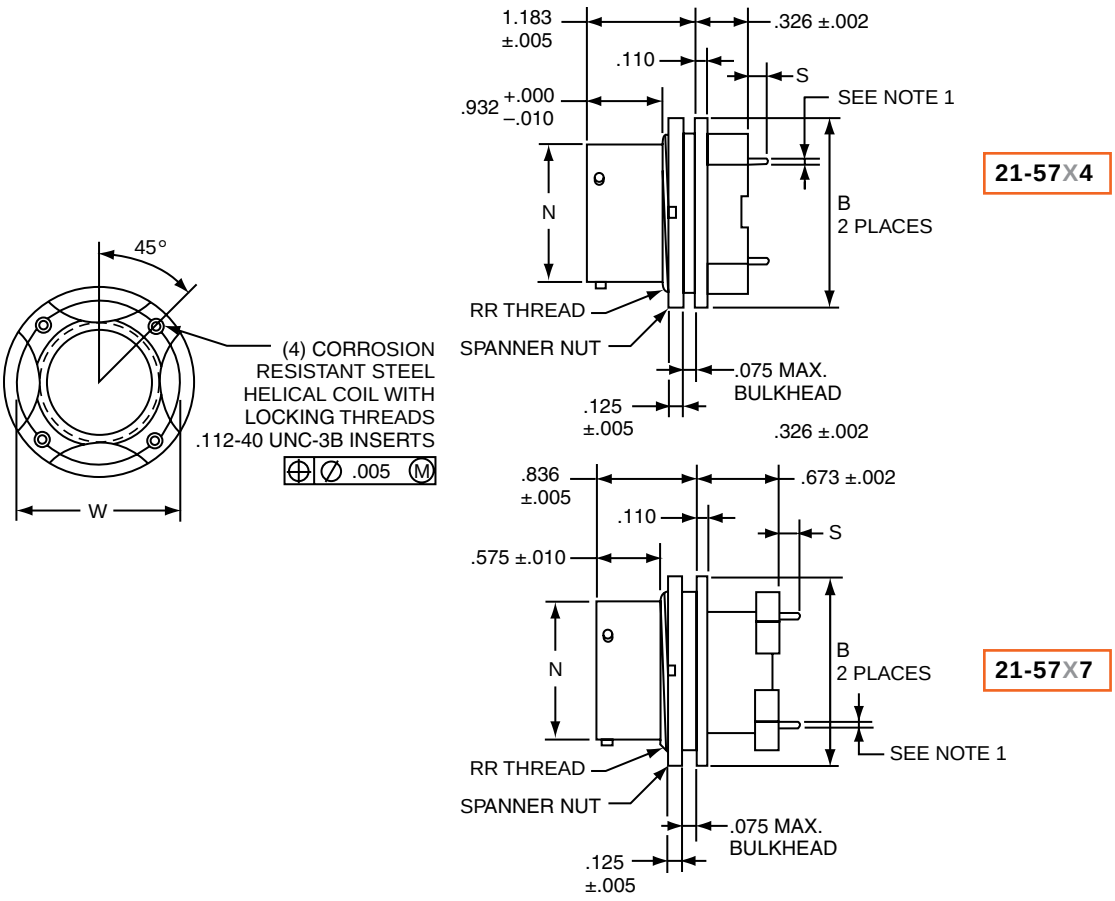

Note 1. Standard tail for size 22 is .020 ±.001 dia.
Standard tail for size 20 is .030 ±.001 dia.
Plug movement required to clear FLJT receptacles: .625 min.

Shell Size	B Dia. ±.005	N Dia. +.001 –.005	S ±.020	W	RR Thread UNEF-2A
11	1.062	.700	.132	.850	.8125-20
13	1.250	.850	.132	.994	1.0000-20
15	1.375	.975	.132	1.119	1.1250-20
17	1.500	1.100	.132	1.237	1.2500-18
19	1.625	1.207	.132	1.379	1.3750-18
21	1.750	1.332	.132	1.489	1.5000-18
23	1.875	1.457	.132	1.619	1.6250-18
25	2.000	1.582	.132	1.744	1.7500-18

All dimensions for reference only.

(Minimum Penetration)

PART # To complete, see how to order pages 288.-289

Filter Connector Designator	Connector Filter Type	Shell Finish	Shell Style	Shell Size & Insert Arrg	Type of Contact/ Keyway Position
21	29	X	4	XX-XX	X

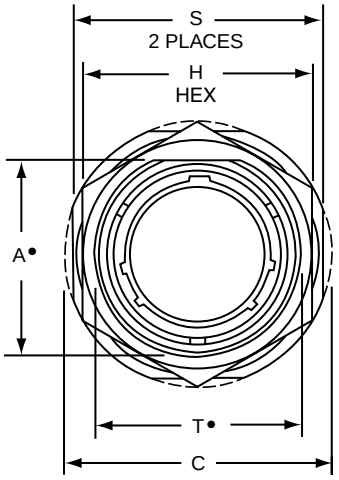

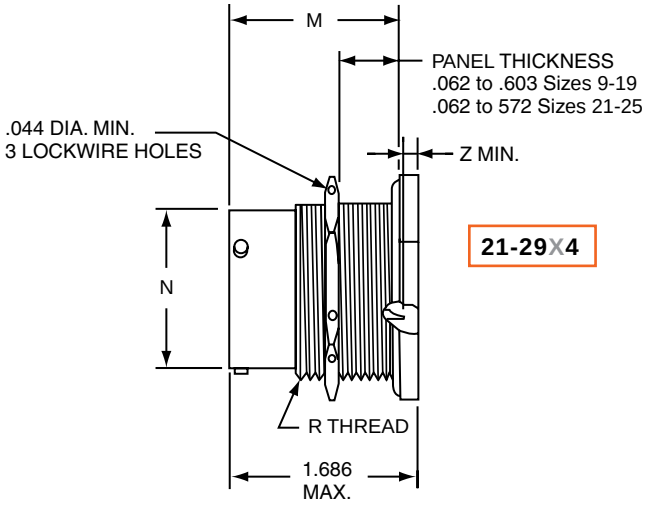

• "D" shaped mounting hole dimensions
Plug movement required to clear FLJT receptacles: .625 min.

Shell Size	A• Flat +.000 −.010	C Dia. +.011 −.010	H Hex +.017 −.016	M ±.005	N Dia +.001 −.005	R Thread (Plated) Class -2A	S +.016 −.015	T• Dia. +.010 −.000	SHORT SHELL VHF/UHF Filters			
									Size 16 Contact Z Max.	Size 16 or 16 & 20 Contacts Z Max.	Size 20 Contact Z Max.	Size 22 Contact Z Max.
9	.669	1.188	.875	1.557	.572	.6875-24UNEF	1.062	.697	.000	.000	.000	.000
11	.769	1.375	1.000	1.557	.700	.8125-20UNEF	1.250	.822	.000	.000	.000	.000
13	.955	1.500	1.188	1.557	.850	1.0000-20UNEF	1.375	1.007	.000	.000	.000	.000
15	1.084	1.625	1.312	1.557	.975	1.1250-18UNEF	1.500	1.134	.000	.000	.000	.000
17	1.208	1.750	1.438	1.557	1.100	1.2500-18UNEF	1.625	1.259	.000	.000	.000	.000
19	1.333	1.938	1.562	1.557	1.207	1.3750-18UNEF	1.812	1.384	.000	.000	.000	.000
21	1.459	2.062	1.688	1.525	1.332	1.5000-18UNEF	1.938	1.507	.000	.000	.000	.000
23	1.580	2.188	1.812	1.525	1.457	1.6250-18UNEF	2.062	1.634	.000	.000	.000	.000
25	1.709	2.312	2.000	1.525	1.582	1.7500-18UNS	2.188	1.759	.000	.000	.000	.000

All dimensions for reference only.

The Amphenol® FSJT Series combines the unique design features of the scoop-proof FLJT Series with the standard mounting dimensions of JT types.

- 100% scoop-proof design
- Standard mounting dimensions
- Compliance with European Specifications PAN6433-2, LN29729, VG96912
- Uses proven filter technology with available components from other series
- EMP protection versions available

FSJT

FSJT Master Key/Keyway Rotation

Shell Size	AB Angle of Rotation (Degrees)				
	Normal	A	B	C	D
8	95	–	–	–	–
10	95	81	67	123	109
12	95	75	63	127	115
14	95	74	61	129	116
16	95	77	65	125	113
18	95	77	65	125	113
20	95	77	65	125	113
22	95	80	69	121	110
24	95	80	69	121	110

A plug with a given rotation letter will mate with a receptacle with the same rotation letter. The AB angle for a given connector is the same whether it contains pins or sockets. Inserts are not rotated in conjunction with the master key/keyway.

AB angles shown are viewed from the front face of the connector. A receptacle is shown at right. The angles for the plug are exactly the same, except the direction of rotation is opposite of that shown for the receptacle.

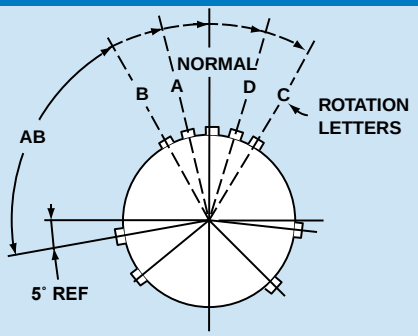

RELATIVE POSSIBLE POSITION
OF ROTATED MASTER KEYWAY
(front face of receptacle shown)

Amphenol Aerospace

PART # **To complete, see how to order pages 288-289.**

Filter Connector Designator	Connector Filter Type	Shell Finish	Shell Style	Shell Size & Insert Arrg	Type of Contact/ Keyway Position
21	63	X	0	XX-XX	X

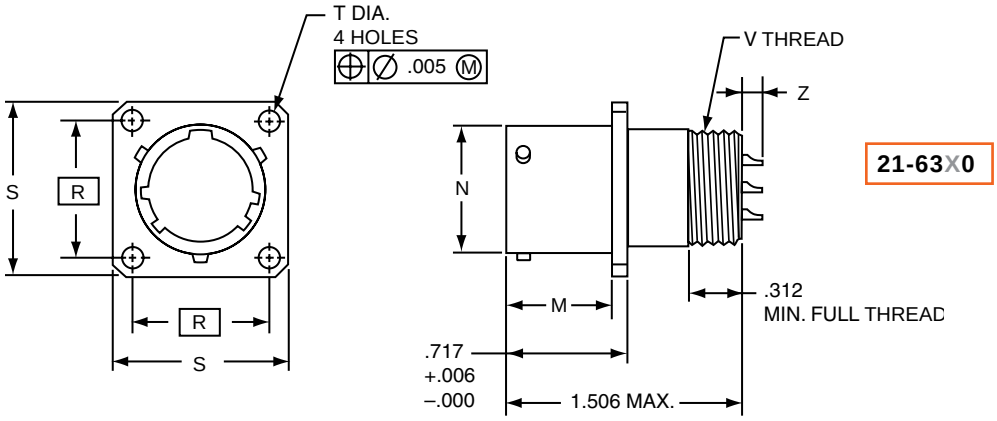

Plug movement required to clear FSJT receptacles: .625 min.

Shell Size	M +.000 –.005	N Dia. +.001 –.005	R (TP)	S +.021 –.020	T Dia. +.004 –.003	V Thread UNEF-2A	Z Max. Size 20 Contact	Z Max. Size 16 or 16 & 20 Contacts	Z Max. Size 22 Contact
10	.632	.590	.719	.938	.120	.5625-24	.165	.265	.134
12	.632	.750	.812	1.031	.120	.6875-24	.165	.265	.134
14	.632	.875	.906	1.125	.120	.8125-20	.165	.265	.134
16	.632	1.000	.969	1.219	.120	.9375-20	.165	.265	.134
18	.632	1.125	1.062	1.312	.120	1.0625-18	.165	.265	.134
20	.602	1.250	1.156	1.438	.120	1.1875-18	.165	.265	.134
22	.602	1.375	1.250	1.562	.120	1.3125-18	.165	.265	.134
24	.602	1.500	1.375	1.688	.147	1.4375-18	.165	.265	.134

All dimensions for reference only.

PART #
To complete, see how to order pages 288-289.

Filter Connector Designator	Connector Filter Type	Shell Finish	Shell Style	Shell Size & Insert Arrg	Type of Contact/ Keyway Position
21	65	X	0	XX-XX	X
21	63	X	2	XX-XX	X

UTS (Crimp) Contact SAE AS39029/57

21-65X0

UTS (Crimp) Contact SAE AS39029/57

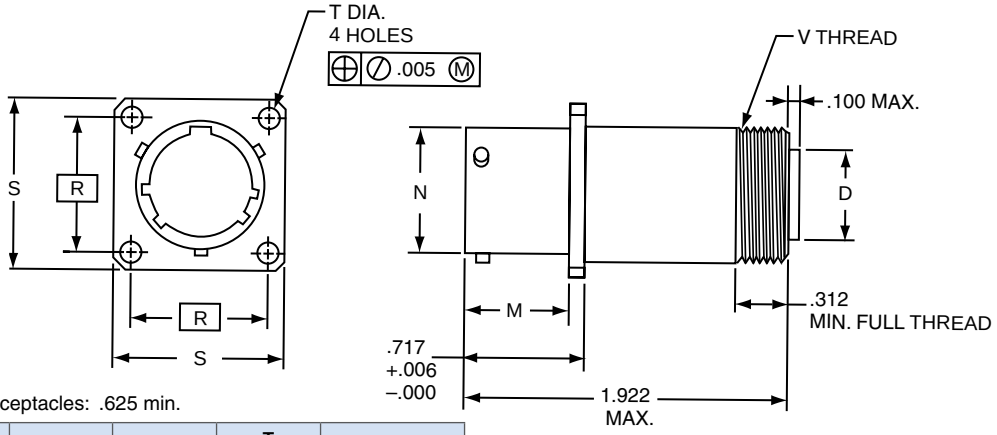

Plug movement required to clear FSJT receptacles: .625 min.

Shell Size	D Dia. ±.005	M +.000 –.005	N Dia. +.001 –.005	R (TP)	S +.021 –.020	T Dia. +.004 –.003	V Thread UNEF-2A
10	.427	.632	.590	.719	.938	.120	.6875-24
12	.541	.632	.750	.812	1.031	.120	.8125-20
14	.666	.632	.875	.906	1.125	.120	.9375-20
16	.791	.632	1.000	.969	1.219	.120	1.0625-18
18	.897	.632	1.125	1.062	1.312	.120	1.1875-18
20	1.022	.602	1.250	1.156	1.438	.120	1.3125-18
22	1.147	.602	1.375	1.250	1.562	.120	1.4375-18
24	1.272	.602	1.500	1.375	1.688	.147	1.5625-18

FSJT
MIL-DTL-38999 Type
Box Mounting Receptacle Aluminum

21-63X2

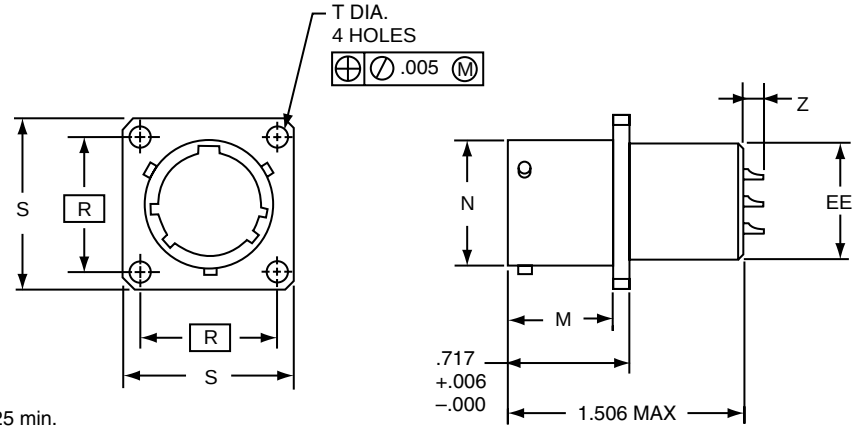

Plug movement required to clear FSJT receptacles: .625 min.

Shell Size	M +.000 –.005	N Dia. +.001 –.005	R (TP)	S +.021 –.020	T Dia. +.004 –.003	EE +.001 –.005	Z Max. Size 16 Contact	Z Max. Size 20 Contact	Z Max. Size 16 or 16 & 20 Contacts	Z Max. Size 22 Contact
10	.632	.590	.719	.938	.120	.562	.265	.165	.265	.134
12	.632	.750	.812	1.031	.120	.687	.265	.165	.265	.134
14	.632	.875	.906	1.125	.120	.812	.265	.165	.265	.134
16	.632	1.000	.969	1.219	.120	.937	.265	.165	.265	.134
18	.632	1.125	1.062	1.312	.120	1.062	.265	.165	.265	.134
20	.602	1.250	1.156	1.438	.120	1.187	.265	.165	.265	.134
22	.602	1.375	1.250	1.562	.120	1.312	.265	.165	.265	.134
24	.602	1.500	1.375	1.688	.147	1.437	.265	.165	.265	.134

All dimensions for reference only.

Amphenol Aerospace

PART #
To complete, see how to order pages 288-289.

Filter Connector Designator	Connector Filter Type	Shell Finish	Shell Style	Shell Size & Insert Arrg	Type of Contact/ Keyway Position
21	65	X	2	XX-XX	X
21	63	X	7	XX-XX	X

UTS (Crimp) Contact SAE AS39029/57

21-65X2

UTS (Crimp) Contact SAE AS39029/57

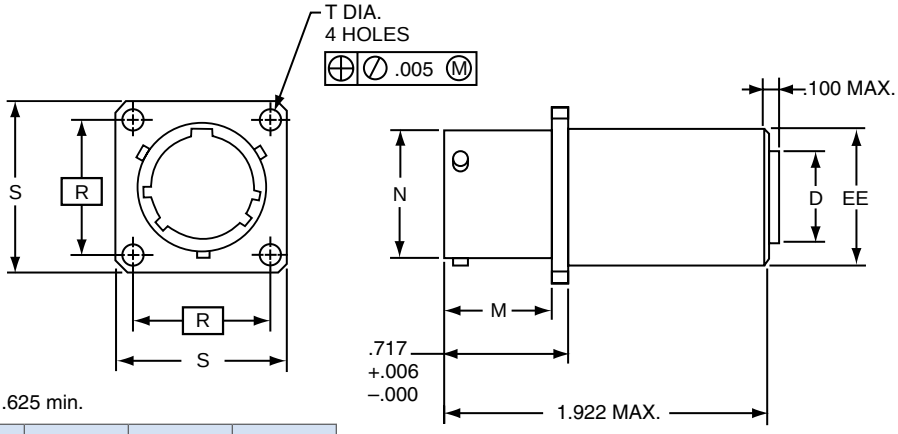

Plug movement required to clear FSJT receptacles: .625 min.

Shell Size	D Dia. ±.005	M +.000 −.005	N Dia. +.001 −.005	R (TP)	S +.021 −.020	T Dia. +.004 −.003	EE Dia. +.001 −.005
10	.427	.632	.590	.719	.938	.120	.687
12	.541	.632	.750	.812	1.031	.120	.811
14	.666	.632	.875	.906	1.125	.120	.937
16	.791	.632	1.000	.969	1.219	.120	1.061
18	.897	.632	1.125	1.062	1.312	.120	1.187
20	1.022	.602	1.250	1.156	1.438	.120	1.312
22	1.147	.602	1.375	1.250	1.562	.120	1.437
24	1.272	.602	1.500	1.375	1.688	.147	1.562

FSJT
MIL-DTL-38999
Jam Nut Receptacle Aluminum

21-63X7

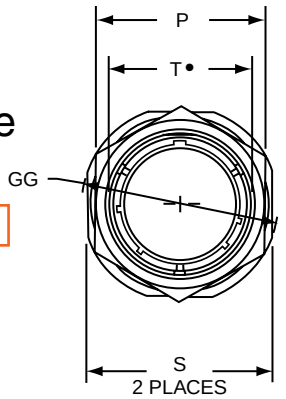

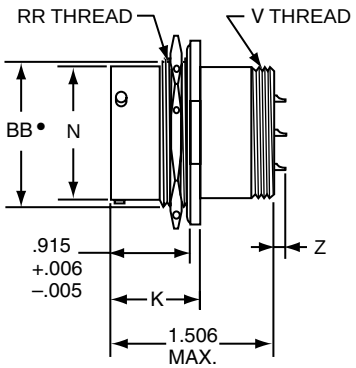

• "D" shaped mounting hole dimensions
Plug movement required to clear FSJT receptacles: .625 min.

Shell Size	K +.006 −.005	N Dia. +.001 −.005	P Hex	S ±.016	T• +.010 −.000	V Thread UNEF Class 2A	Z ±.020	BB• +.000 −.010	GG Max.	RR Thread UNEF Class 2A	SS +.001 −.016
10	1.024	.590	.875	1.062	.697	.5625-24	.150	.669	1.203	.6875-24	.680
12	1.024	.750	1.062	1.250	.884	.6875-24	.150	.830	1.391	.8750-20	.859
14	1.024	.875	1.188	1.375	1.007	.8125-20	.150	.955	1.515	1.0000-20	.984
16	1.024	1.000	1.312	1.500	1.134	.9375-20	.150	1.084	1.641	1.1250-18	1.108
18	1.055	1.125	1.438	1.625	1.259	1.0625-18	.150	1.208	1.766	1.2500-18	1.233
20	1.055	1.250	1.562	1.812	1.384	1.1875-18	.150	1.333	1.953	1.3750-18	1.358
22	1.055	1.375	1.688	1.938	1.507	1.3125-18	.150	1.459	2.078	1.5000-18	1.483
24	1.055	1.500	1.812	2.062	1.634	1.4375-18	.150	1.580	2.203	1.6250-18	1.610

All dimensions for reference only.

FBL MIL-DTL-38999, Series IV
Circular Filters

Components designed to meet the severe mechanical and environmental requirements of MIL-DTL-38999 Series III are now available to Series IV users. Modifications of the connector are available with EMP protection, incorporating MOV's, diodes or a combination of both.

- Intermateable with MIL-DTL-38999 Series IV plugs
- Maintains all the features of standard MIL-DTL-38999 Series IV receptacles
- Scoop-proof pins provide contact protection
- Uses insert patterns from MIL-DTL-38999 Series III

FBL

Polarity Dimensions

Key and Keyway Arrangement	XX°	YY°
N	110°	250°
A	100°	260°
B	90°	270°
C	80°	280°
D	70°	290°
K	120°	255°

FBL Master Key/Keyway Rotation

Shell Size	Receptacle Key Position				Main Key Receptacle/Basic	
	PP°	QQ°	RR°	SS°	Socket Contact T_1	Pin Contact T_2
11	44°28'	151°6'	208°54'	315°32'	.075	.109
13	44°25'	150°31'	209°29'	315°35'	.076	.112
15	44°33'	150°24'	209°36'	315°27'	.096	.132
17	44°36'	150°22'	209°38'	315°24'	.096	.134
19	44°33'	150°27'	209°33'	315°27'	.117	.154
21	44°34'	150°23'	209°37'	315°26'	.118	.155
23	44°34'	150°20'	209°40'	315°26'	.138	.176
25	44°42'	150°22'	209°48'	315°18'	.139	.177

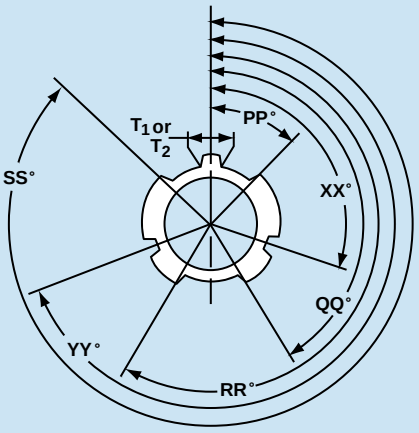

RELATIVE POSSIBLE POSITION OF KEYWAYS (front face of receptacle shown)

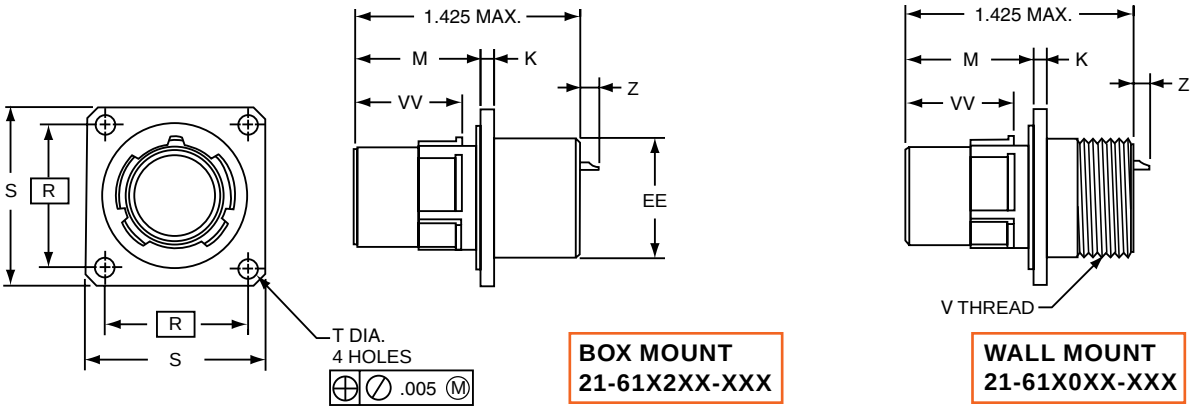

BOX MOUNT
21-61X2XX-XXX

WALL MOUNT
21-61X0XX-XXX

Shell Size	K ±.010	M ±.020	R (TP)	S +.021 −.020	T Dia. +.004 −.003	V Thread (Plated) −.006	EE Dia. +.001 −.005	VV ±.003	Z Max. Size 16 Contact	Size 20 Contact	Size 16 or 16 & 20 Contacts	Size 22 Contact
11	.092	.791	.812	1.029	.128	M15X1-6g0.100R	.589	.672	.265	.165	.265	.134
13	.092	.791	.906	1.124	.128	M18X1-6g0.100R	.707	.672	.265	.165	.265	.134
15	.092	.791	.969	1.218	.128	M22X1-6g0.100R	.865	.672	.265	.165	.265	.134
17	.092	.791	1.062	1.313	.128	M25X1-6g0.100R	.983	.672	.265	.165	.265	.134
19	.092	.791	1.156	1.439	.128	M28X1-6g0.100R	1.101	.662	.265	.165	.265	.134
21	.124	.791	1.250	1.561	.128	M31X1-6g0.100R	1.219	.662	.265	.165	.265	.134
23	.124	.791	1.375	1.687	.147	M34X1-6g0.100R	1.337	.662	.265	.165	.265	.134
25	.124	.791	1.500	1.813	.147	M37X1-6g0.100R	1.455	.662	.265	.165	.265	.134

All dimensions for reference only.

FBL – MIL-DTL-38999 Series IV

Box and Wall Mounting Receptacle (UTS Crimp)

PART # **To complete, see how to order pages 288-289.**

Filter Connector Designator	Connector Filter Type	Shell Finish	Shell Style	Shell Size & Insert Arrg	Type of Contact/ Keyway Position
21	64	X	2	XX-XX	X

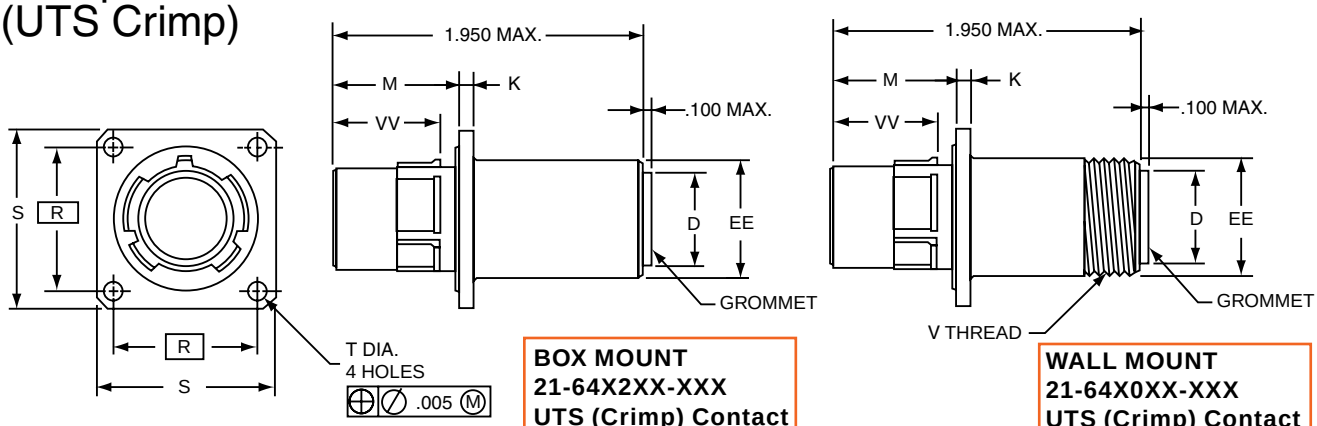

BOX MOUNT
21-64X2XX-XXX
UTS (Crimp) Contact
MIL-C-39029/57

WALL MOUNT
21-64X0XX-XXX
UTS (Crimp) Contact
MIL-C-39029/57

Shell Size	D Dia. ±.005	K ±.010	M ±.020	R (TP)	S +.021 −.020	T Dia. +.004 −.003	V Thread (Plated) −.006	EE Dia. +.001 −.005	VV ±.003
11	.427	.092	.791	.812	1.029	.128	M18X1-6g0.100R	.687	.672
13	.541	.092	.791	.906	1.124	.128	M22X1-6g0.100R	.811	.672
15	.666	.092	.791	.969	1.218	.128	M25X1-6g0.100R	.937	.672
17	.791	.092	,791	1.062	1.313	.128	M28X1-6g0.100R	1.061	.672
19	.897	.092	.791	1.156	1.439	.128	M31X1-6g0.100R	1.187	.662
21	1.022	.124	.791	1.250	1.561	.128	M34X1-6g0.100R	1.312	.662
23	1.147	.124	.791	1.375	1.687	.147	M37X1-6g0.100R	1.437	.662
25	1.272	.124	.791	1.500	1.813	.147	M41X1-6g0.100R	1.562	.662

The Amphenol® FPT Series combines the unique design features of the miniature PT Series with an EMI filter.

- Intermateable with MIL-DTL-26482 Series connectors see Matrix 26482, series 2 section in this catalog or Catalog 12-070 for MIL-DTL-26482, Series 1.
- Quick positive coupling with visual confirmation of mating
- Higher reliability and greater durability with permanently encapsulated contacts
- Aluminum shells with several finish options

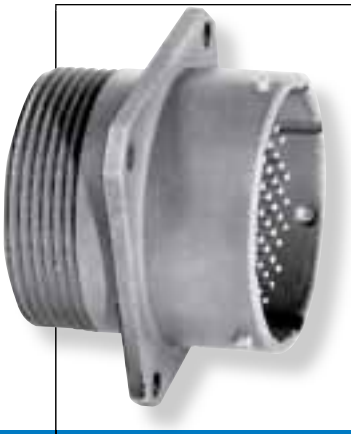

FPT Series Connectors

FPT Alternate Positions

Insert Arrangements	Degrees			
	W	X	Y	Z
10-5	45	151	180	270
10-6	90	–	–	–
10-98	90	180	240	270
12-3	–	–	180	–
12-8	90	112	203	292
12-10	60	155	270	295
12-98	61	135	189	340
14-12	434	90	–	–
14-18	15	90	180	270
14-19	30	165	315	–
16-8	54	152	180	331
16-26	60	–	275	338
18-32	85	138	222	265
20-41	45	126	225	–
22-41	39	–	–	–
22-55	30	142	226	314
24-61	90	180	270	324

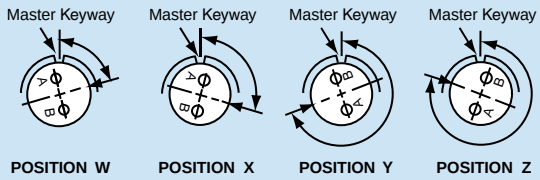

Views looking into front face of pin insert or rear of socket insert.

Amphenol Aerospace

PART #

To complete, see how to order pages 288-289.

Filter Connector Designator	Connector Filter Type	Shell Finish	Shell Style	Shell Size & Insert Arrg	Type of Contact/ Keyway Position
21	20	X	0	XX-XX	X
21	31	X	0	XX-XX	X
21	33	X	0	XX-XX	X

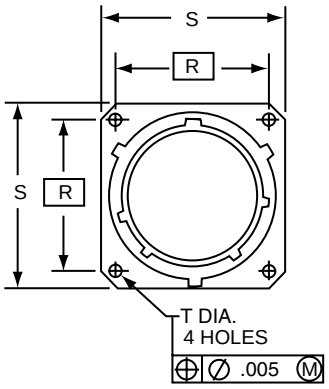

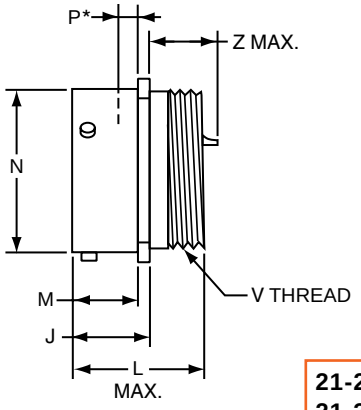

21-20X0XX-XXX
21-31X0XX-XXX

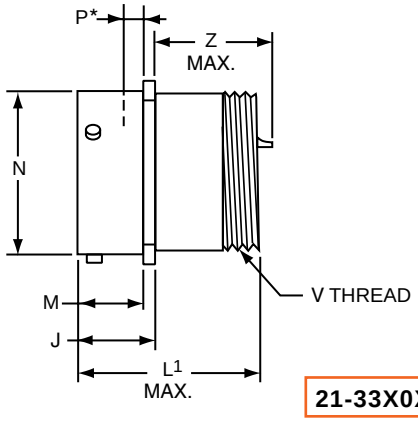

21-33X0XX-XXX

Plug movement required to clear FPT receptacles: .438 min.
* Acceptable panel thickness for back panel mounting a standard receptacle.

Shell Size	J +.021 −.010	M +.010 −.000	N Dia +.001 −.005	P* Max.	R (TP)	S +.011 −.010	T Dia. ±.005	V Thread UNEF-2A (Plated)	SHORT SHELL VHF/UHF/MF Filters			LONG SHELL HF Filters		
									L Max.	Size 20 Contact Z Max.	Size 16 or 16 & 20 Contacts Z Max.	L[1] Max.	Size 20 Contact Z Max.	Size 16 or 16 & 20 Contacts Z Max.
8	.493	.431	.473	.087	.594	.812	.120	.4375-28	1.103	.850	.904	1.588	1.258	1.328
10	.493	.431	.590	.087	.719	.938	.120	.5625-24	1.103	.850	.904	1.588	1.258	1.328
12	.493	.431	.750	.087	.812	1.031	.120	.6875-24	1.103	.850	.904	1.588	1.258	1.328
14	.493	.431	.875	.087	.906	1.125	.120	.8125-20	1.103	.850	.904	1.588	1.258	1.328
16	.493	.431	1.000	.087	.969	1.219	.120	.9375-20	1.103	.850	.904	1.588	1.258	1.328
18	.493	.431	1.125	.087	1.062	1.312	.120	1.0625-18	1.103	.850	.904	1.588	1.258	1.328
20	.650	.556	1.250	.212	1.156	1.438	.120	1.1875-18	1.166	.755	.809	1.651	1.163	1.233
22	.650	.556	1.375	.212	1.250	1.562	.120	1.3125-18	1.166	.755	.809	1.651	1.163	1.233
24	.683	.589	1.500	.212	1.375	1.688	.147	1.4375-18	1.166	.722	.776	1.651	1.130	1.200

All dimensions for reference only.

PART #

To complete, see how to order pages 288-289.

Filter Connector Designator	Connector Filter Type	Shell Finish	Shell Style	Shell Size & Insert Arrg	Type of Contact/ Keyway Position
21	20	X	2	XX-XX	X
21	31	X	2	XX-XX	X
21	33	X	2	XX-XX	X

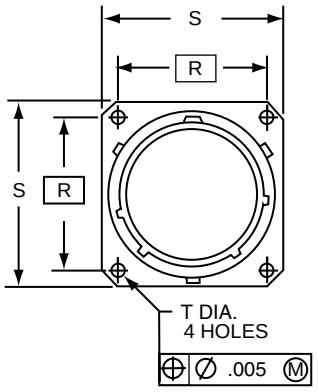

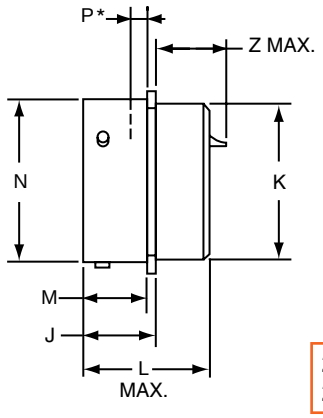

21-20X2XX-XXX
21-31X2XX-XXX

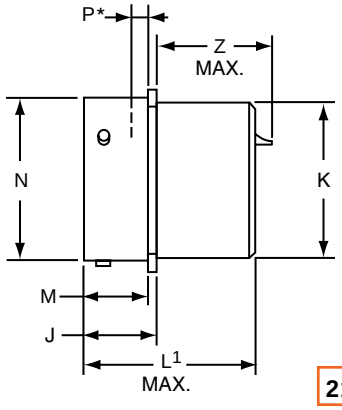

21-33X2XX-XXX

Plug movement required to clear FPT receptacles: .438 min.
* Acceptable panel thickness for back panel mounting a standard receptacle.

Shell Size	J +.021 −.010	K Dia. +.011 −.000	M +.010 −.000	N Dia +.001 −.005	P* Max.	R (TP)	S +.011 −.010	T Dia. ±.005	SHORT SHELL VHF/UHF/MF Filters L Max.	Size 20 Contact Z Max.	Size 16 or 16 & 20 Contacts Z Max.	LONG SHELL HF Filters L1 Max.	Size 20 Contact Z Max.	Size 16 or 16 & 20 Contacts Z Max.
8	.493	.438	.431	.473	.087	.594	.812	.120	1.103	.850	.904	1.588	1.258	1.328
10	.493	.562	.431	.590	.087	.719	.938	.120	1.103	.850	.904	1.588	1.258	1.328
12	.493	.688	.431	.750	.087	.812	1.031	.120	1.103	.850	.904	1.588	1.258	1.328
14	.493	.812	.431	.875	.087	.906	1.125	.120	1.103	.850	.904	1.588	1.258	1.328
16	.493	.938	.431	1.000	.087	.969	1.219	.120	1.103	.850	.904	1.588	1.258	1.328
18	.493	1.062	.431	1.125	.087	1.062	1.312	.120	1.103	.850	.904	1.588	1.258	1.328
20	.650	1.188	.556	1.250	.212	1.156	1.438	.120	1.166	.755	.809	1.651	1.163	1.233
22	.650	1.312	.556	1.375	.212	1.250	1.562	.120	1.166	.755	.809	1.651	1.163	1.233
24	.683	1.438	.589	1.500	.212	1.375	1.688	.147	1.166	.722	.776	1.651	1.130	1.200

All dimensions for reference only.

Amphenol Aerospace

PART #

To complete, see how to order pages 288-289.

Filter Connector Designator	Connector Filter Type	Shell Finish	Shell Style	Shell Size & Insert Arrg	Type of Contact/ Keyway Position
21	20	X	7	XX-XX	X
21	31	X	7	XX-XX	X
21	33	X	7	XX-XX	X

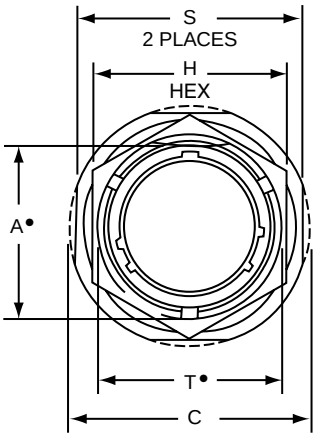

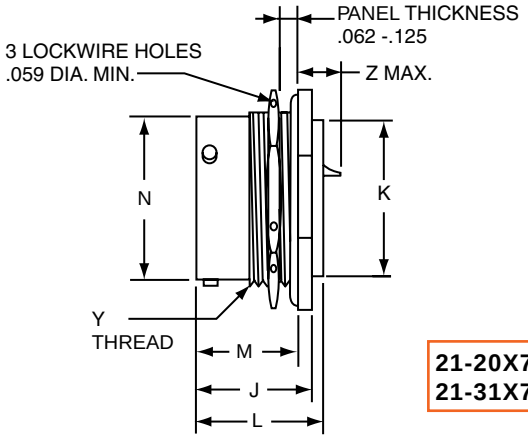

21-20X7XX-XXX
21-31X7XX-XXX

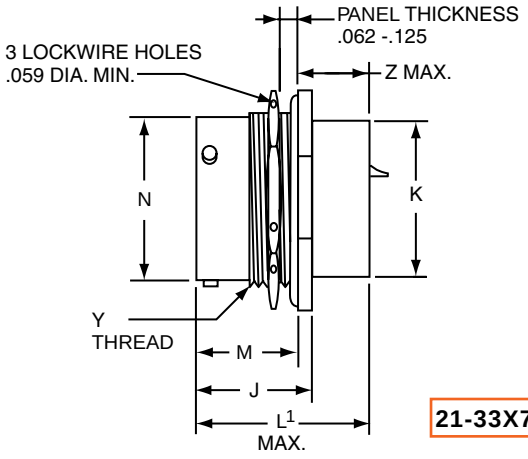

21-33X7XX-XXX

• "D" shaped mounting hole dimensions
Plug movement required to clear FPT receptacles: .438 min.

Shell Size	A• Flat +.000 −.010	C Dia. +.011 −.010	H Hex +.017 −.016	J +.006 −.005	K Dia. +.011 −.000	M ±.005	N Dia +.001 −.005	S ±.010	T• Dia. +.010 −.000	Y Thread UNEF-2A (Plated)	SHORT SHELL VHF/UHF/MF Filters			LONG SHELL HF Filters		
											L Max.	Size 20 Contact Z Max.	Size 16 or 16 & 20 Contacts Z Max.	L[1] Max.	Size 20 Contact Z Max.	Size 16 or 16 & 20 Contacts Z Max.
8	.542	1.062	.750	.821	.438	.696	.473	.938	.572	.5625-24	1.103	.642	.698	1.588	1.050	1.120
10	.669	1.188	.875	.821	.562	.696	.590	1.062	.697	.6875-24	1.103	.642	.698	1.588	1.050	1.120
12	.830	1.375	1.062	.821	.688	.696	.750	1.250	.884	.8750-20	1.103	.642	.698	1.588	1.050	1.120
14	.955	1.500	1.188	.821	.812	.696	.875	1.375	1.009	1.0000-20	1.103	.642	.698	1.588	1.050	1.120
16	1.084	1.625	1.312	.821	.938	.696	1.000	1.500	1.134	1.1250-18	1.103	.642	.698	1.588	1.050	1.120
18	1.208	1.750	1.438	.821	1.062	.696	1.125	1.625	1.259	1.2500-18	1.103	.642	.698	1.588	1.050	1.120
20	1.333	1.938	1.562	1.040	1.188	.884	1.250	1.812	1.384	1.3750-18	1.166	.516	.570	1.651	.924	.994
22	1.459	2.062	1.688	1.040	1.312	.884	1.375	1.938	1.509	1.5000-18	1.166	.516	.570	1.651	.924	.994
24	1.575	2.188	1.812	1.073	1.438	.917	1.500	2.062	1.634	1.6250-18	1.166	.483	.537	1.651	.891	.961

All dimensions for reference only.

PART #
To complete, see how to order pages 288-289.

Filter Connector Designator	Connector Filter Type	Shell Finish	Shell Style	Shell Size & Insert Arrg	Type of Contact/ Keyway Position
21	20	X	4	XX-XX	X
21	31	X	4	XX-XX	X
21	33	X	4	XX-XX	X

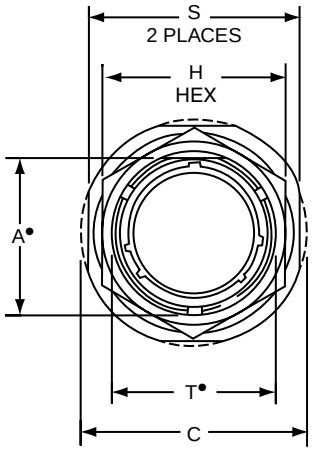

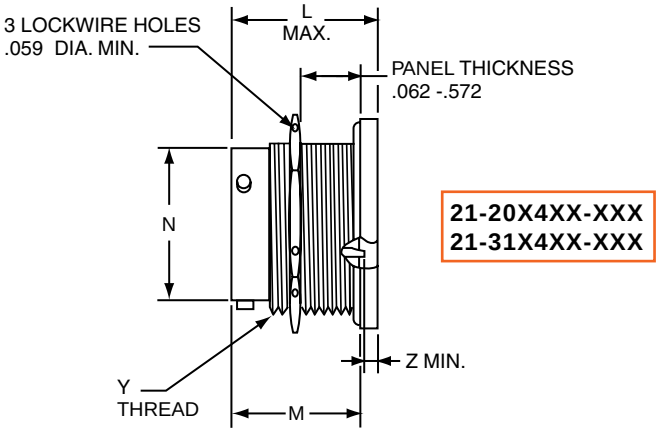

21-20X4XX-XXX
21-31X4XX-XXX

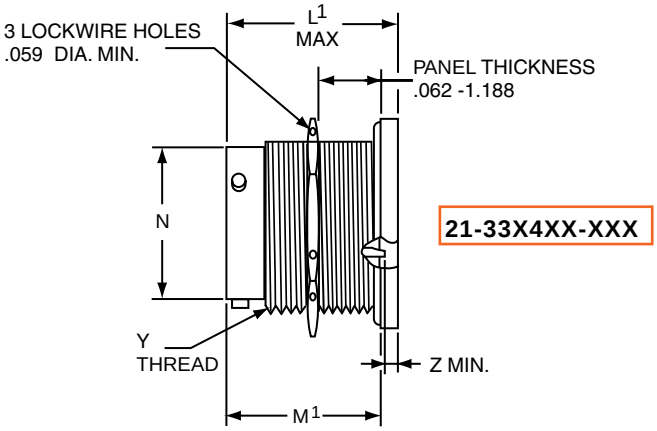

21-33X4XX-XXX

• "D" shaped mounting hole dimensions
Plug movement required to clear FPT receptacles: .438 min.

Shell Size	A• Flat +.000 –.010	C Dia. +.011 –.010	H Hex +.017 –.016	M +.016 –.015	M1 +.016 –.015	N Dia +.001 –.005	S +.011 –.010	T• Dia. +.010 –.000	Y Thread UNEF-2A (Plated)	SHORT SHELL VHF/UHF/MF Filters L Max.	SHORT SHELL VHF/UHF/MF Filters Size 20 Contact Z Max.	SHORT SHELL VHF/UHF/MF Filters Size 16 or 16 & 20 Contacts Z Max.	LONG SHELL HF Filters L1 Max.	LONG SHELL HF Filters Size 20 Contact Z Max.	LONG SHELL HF Filters Size 16 or 16 & 20 Contacts Z Max.
8	.542	1.062	.750	1.235	1.690	.473	.938	.572	.5625-24	1.366	.022	.029	1.821	.070	.000
10	.669	1.188	.875	1.235	1.690	.590	1.062	.697	.6875-24	1.366	.022	.029	1.821	.070	.000
12	.830	1.375	1.062	1.235	1.690	.750	1.250	.884	.8750-20	1.366	.022	.029	1.821	.070	.000
14	.955	1.500	1.188	1.235	1.690	.875	1.375	1.009	1.0000-20	1.366	.022	.029	1.821	.070	.000
16	1.084	1.625	1.312	1.235	1.690	1.000	1.500	1.134	1.1250-18	1.366	.022	.029	1.821	.070	.000
18	1.208	1.750	1.438	1.235	1.690	1.125	1.625	1.259	1.2500-18	1.366	.022	.029	1.821	.070	.000
20	1.333	1.938	1.562	1.266	1.721	1.250	1.812	1.384	1.3750-18	1.428	.062	.029	1.883	.070	.000
22	1.459	2.062	1.688	1.266	1.721	1.375	1.938	1.509	1.5000-18	1.428	.062	.029	1.883	.070	.000
24	1.575	2.188	1.812	1.266	1.721	1.500	2.062	1.634	1.6250-18	1.428	.062	.029	1.883	.070	.000

All dimensions for reference only.

Amphenol Aerospace

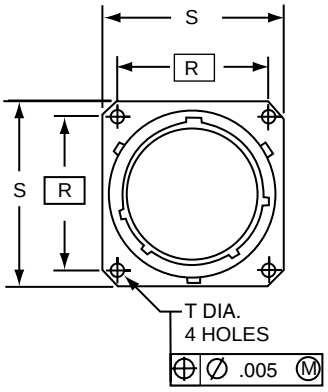

PART #
To complete, see how to order pages 288-289.

Filter Connector Designator	Connector Filter Type	Shell Finish	Shell Style	Shell Size & Insert Arrg	Type of Contact/ Keyway Position
21	22	X	0	XX-XX	X
21	32	X	7	XX-XX	X

21-22X0XX-XXX

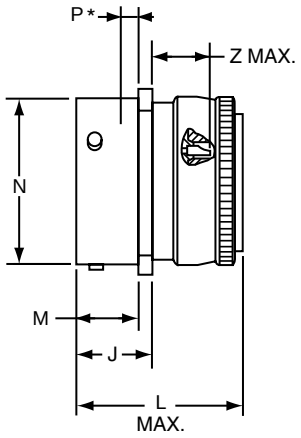

Plug movement required to clear FPT receptacles: .438 min.
* Acceptable panel thickness for back panel mounting a standard receptacle.

Shell Size	J +.021 –.010	M +.010 –.000	N Dia +.001 –.005	P* Max.	R (TP)	S +.011 –.010	T Dia. ±.005	SHORT SHELL VHF/UHF/MF Filters L Max.	SHORT SHELL VHF/UHF/MF Filters Size 20 Contact Z Max.
8	.493	.431	.473	.087	.594	.812	.120	1.409	.774
10	.493	.431	.590	.087	.719	.938	.120	1.409	.774
12	.493	.431	.750	.087	.812	1.031	.120	1.409	.774
14	.493	.431	.875	.087	.906	1.125	.120	1.409	.774
16	.493	.431	1.000	.087	.969	1.219	.120	1.409	.774
18	.493	.431	1.125	.087	1.062	1.312	.120	1.409	.774
20	.650	.556	1.250	.212	1.156	1.438	.120	1.553	.679
22	.650	.556	1.375	.212	1.250	1.562	.120	1.553	.679
24	.683	.589	1.500	.212	1.375	1.688	.147	1.553	.646

All dimensions for reference only.

FPTE
Jam Nut Receptacle

21-22X7XX-XXX

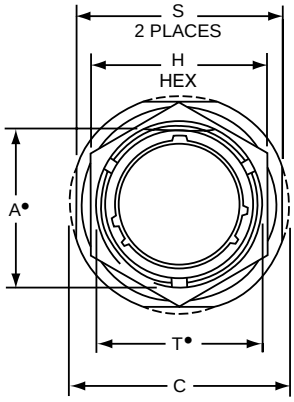

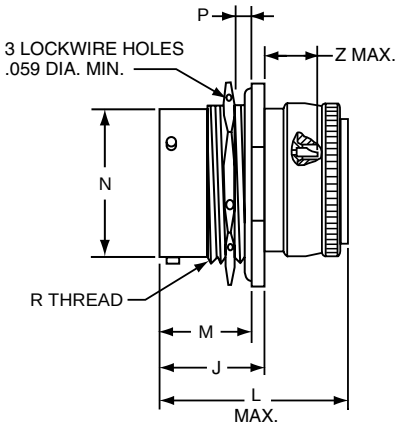

• "D" shaped mounting hole dimensions
Plug movement required to clear FPT receptacles: .438 min.

Shell Size	A• Flat +.000 –.010	C Dia. +.011 –.010	H Hex +.017 –.016	J +.006 –.005	M ±.005	N Dia. +.001 –.005	P Panel Thickness Max.	P Panel Thickness Min.	R Thread UNEF-2A (Plated)	S ±.010	T• Dia. +.010 –.000	SHORT SHELL VHF/UHF Filters L Max.	SHORT SHELL VHF/UHF Filters Size 20 Contact Z Max.
8	.542	1.062	.750	.821	.696	.473	.125	.062	.5625-24	.938	.572	1.546	.566
10	.669	1.188	.875	.821	.696	.590	.125	.062	.6875-24	1.062	.697	1.546	.566
12	.830	1.375	1.062	.821	.696	.750	.125	.062	.8750-20	1.250	.884	1.546	.566
14	.955	1.500	1.188	.821	.696	.875	.125	.062	1.0000-20	1.375	1.009	1.546	.566
16	1.084	1.625	1.312	.821	.696	1.000	.125	.062	1.1250-18	1.500	1.134	1.546	.566
18	1.208	1.750	1.438	.821	.696	1.125	.125	.062	1.2500-18	1.625	1.259	1.546	.566
20	1.333	1.938	1.562	1.040	.884	1.250	.250	.062	1.3750-18	1.812	1.384	1.672	.440
22	1.459	2.062	1.688	1.040	.884	1.375	.250	.062	1.5000-18	1.938	1.509	1.672	.440
24	1.575	2.188	1.812	1.073	.917	1.500	.250	.062	1.6250-18	2.062	1.634	1.672	.407

All dimensions for reference only.

The "AN" Filter Connector is designed in configurations intermateable and intermountable with MIL-DTL-5015* connectors and provides electromagnetic interference protection for critical circuits.

- Same dimensions as the non-filtered standard MIL-spec connectors with the exception of back shell length. (See Catalog 12-020).
- Uses non-removable solder cup terminated contacts.
- Shells are impact extruded or machined bar stock aluminum and are available in several conductive platings.
- Applications include power transmission, medical communications, and ground support equipment.

The following insert arrangements within the 5015 family have the same alternate insert rotations for W, X, Y and Z, which are:

Degrees			
W	X	Y	Z
80	110	250	280

16-7	20-22	22-29	24-17	28-16	32-13
18-5	22-6	22-33	24-20	28-17	32-22
18-9	22-12	22-34	24-21	28-19	32-AF
18-13	22-14	24-1	24-28	28-20	36-1
18-14	22-15	24-3	28-1	28-21	36-7
20-7	22-16	24-4	28-4	32-1	36-8
20-8	22-17	24-5	28-8	32-3	36-13
20-9	22-18	24-6	28-9	32-4	40-AR
20-12	22-19	24-7	28-10	32-6	40-AS
20-14	22-21	24-12	28-11	32-9	40-AT
20-16	22-24	24-14	28-14	32-10	40-AU
20-20	22-25	24-16	28-15	32-12	

FAN Connectors

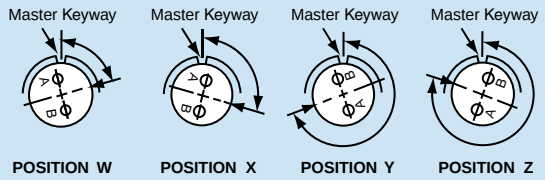

Views looking into front face of pin insert or rear of socket insert.

The following are additional 5015 insert arrangements with alternate rotations.

Insert Arrangement	Degrees			
	W	X	Y	Z
10SL-4	63	–	–	–
12S-3	70	145	215	290
14S-2	–	120	240	–
14S-5	–	110	–	–
14S-7	90	180	270	–
14S-9	70	145	215	290
16-9	35	110	250	325
16-10	90	180	270	–
16-11	35	110	250	325
16-13	35	110	250	325
16S-1	80	–	–	280
16S-4	35	110	250	325
16S-5	70	145	215	290
16S-6	90	180	270	–
16S-8	–	170	265	–
18-1	70	145	215	290
18-3	35	110	250	325
18-4	35	110	250	325
18-8	70	–	–	290
18-10	–	120	240	–
18-11	–	170	265	–
18-12	80	–	–	280
18-15	–	120	240	–
18-20	90	180	270	–
18-22	70	145	215	290
18-29	90	180	270	–
20-3	70	145	215	290

* MIL-DTL-5015 supersedes MIL-C-5015.

Insert Arrangement	Degrees			
	W	X	Y	Z
20-4	45	110	250	–
20-5	35	110	250	325
20-6	70	145	215	290
20-15	80	–	–	280
20-17	90	180	270	–
20-18	35	110	250	325
20-19	90	180	270	–
20-21	35	110	250	325
20-23	35	110	250	325
20-24	35	110	250	325
20-27	35	110	250	325
20-29	80	–	–	280
22-1	35	110	250	325
22-2	70	145	215	290
22-4	35	110	250	325
22-5	35	110	250	325
22-8	35	110	250	325
22-9	70	145	215	290
22-10	35	110	250	325
22-11	35	110	250	325
22-13	35	110	250	325
22-20	35	110	250	325
22-22	–	110	250	–
22-23	35	–	250	–
22-27	80	–	250	280
22-28	80	–	–	280
22-63	20	–	–	–
24-2	80	–	–	280
24-9	35	110	250	325
24-10	80	–	–	280
24-11	35	110	250	325
24-22	45	110	250	–
24-27	80	–	–	280
28-2	35	110	250	325
28-3	70	145	215	290

Insert Arrangement	Degrees			
	W	X	Y	Z
28-5	35	110	250	325
28-6	70	145	215	290
28-7	35	110	250	325
28-12	90	180	270	–
28-18	70	145	215	290
28-22	70	145	215	290
28-AY	45	110	250	–
32-2	70	145	215	290
32-5	35	110	250	325
32-7	80	125	235	280
32-8	80	125	235	280
32-15	35	110	250	280
32-17	45	110	250	–
32-25	60	120	–	–
32-48	80	–	–	–
32-64	80	100	110	250
32-68	30	–	–	–
32-82	30	–	–	–
36-3	70	145	215	290
36-4	70	145	215	290
36-5	–	120	240	–
36-6	35	110	250	325
36-9	80	125	235	280
36-10	80	125	235	280
36-14	90	180	270	–
36-15	60	125	245	305
36-AF	65	–	–	–
40-1	65	130	235	300
40-5	33	–	–	270
40-9	65	125	225	310
40-10	65	125	225	310
40-35	70	130	230	290
40-AD	45	–	–	–
40-AG	37	74	285	322
40-AP	35	110	250	325
40-AV	90	180	270	–

PART #

To complete, see how to order pages 288-289.

Filter Connector Designator	Connector Filter Type	Shell Finish	Shell Style	Shell Size & Insert Arrg	Type of Contact/ Keyway Position
21	26	X	2	XX-XX	X

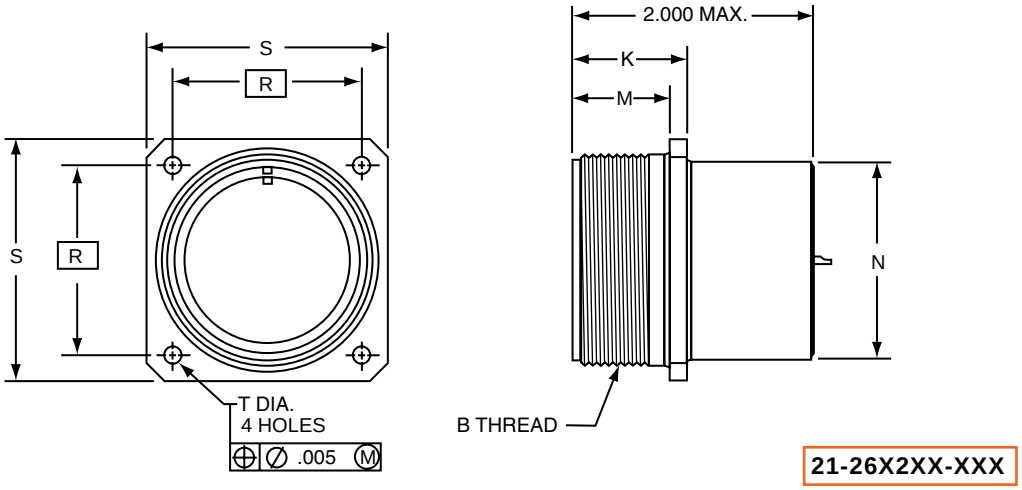

21-26X2XX-XXX

Note: MIL-DTL-5015 supersedes MIL-C-5015.

Shell Size	B Thread Class 2A (Plated)	M +.010 –.000	K +.020 –.010	N Dia. +.010 –.000	R TP	S ±.031	T Dia. +.004 –.002
8S	.5000-28 UNEF	.562	.672	.375	.594	.875	.120
10S	.6250-24 UNEF	.562	.672	.500	.719	1.000	.120
10SL	.6250-24 UNEF	.562	.672	.625	.719	1.000	.120
12S	.7500-20 UNEF	.562	.672	.625	.812	1.094	.120
12	.7500-20 UNEF	.750	.860	.625	.812	1.094	.120
14S	.8750-20 UNEF	.562	.672	.750	.906	1.188	.120
14	.8750-20 UNEF	.750	.860	.750	.906	1.188	.120
16S	1.0000-20 UNEF	.562	.672	.875	.969	1.281	.120
16	1.0000-20 UNEF	.750	.860	.875	.969	1.281	.120
18	1.1250-18 UNEF	.750	.891	1.000	1.062	1.375	.120
20	1.2500-18 NEF	.750	.891	1.125	1.156	1.500	.120
22	1.3750-18 NEF	.750	.891	1.250	1.250	1.625	.120
24	1.5000-18 NEF	.812	.953	1.375	1.375	1.750	.147
28	1.7500-18 NS	.812	.953	1.625	1.562	2.000	.147
32	2.0000-18 NS	.875	1.031	1.875	1.750	2.250	.173
36	2.2500-16 UN	.875	1.031	2.062	1.983	2.500	.173
40	2.5000-16 UN	.875	1.031	2.312	2.188	2.750	.173

All dimensions for reference only.

Amphenol® Filter Adapters
Circuit Protection for Existing Applications

Filter adapters present an effective and economical method of introducing EMI/EMP protection to an installed system. The adapter series of filter connectors from Amphenol are available to intermate with all the popular MIL-Specs.

Features of the Amphenol Adapter include:

- Planar technology from the industry's leader in circulars
- Filter products
- MOV or diode capability for transient protection
- Wide range of tooled patterns
- Space qualified components

Installation of the adapter is quick and efficient, requiring no tools, fixtures or extended downtime. Simply unmate the existing cable harness from the receptacle; attach the coupling nut to the receptacle on the unit; then mate the cable harness to the receptacle side of the adapter. Several design alternatives are available that will help ensure that the adapter remains permanently attached to either the cable harness or the unit receptacle.

FPT Adapter
21-900075-XXX

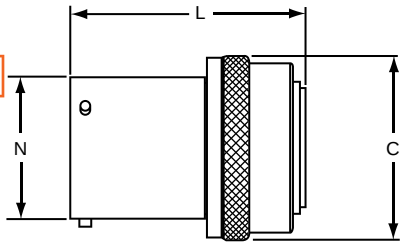

FPT Shell Size	C Dia. Ref.	N Dia. +.001 –.005	L Max.
8	.729	.473	1.626
10	.851	.590	1.626
12	1.035	.750	1.626
14	1.158	.875	1.626
16	1.280	1.000	1.626
18	1.403	1.125	1.626
20	1.525	1.250	1.688
22	1.648	1.375	1.688
24	1.770	1.500	1.688

FTV Adapter
21-900529-XXX

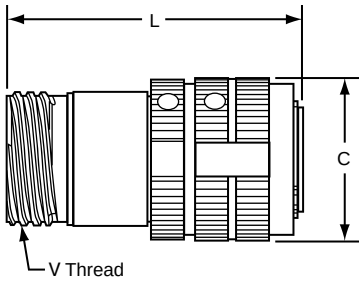

FTV Shell Size	C Dia. Ref.	V Thread 0.1P-0.3L-TS Class 2A	L Max.
9	.845	.6250	2.257
11	.950	.7500	2.257
13	1.121	.8750	2.257
15	1.249	1.0000	2.257
17	1.386	1.1875	2.257
19	1.493	1.2500	2.257
21	1.620	1.3750	2.257
23	1.737	1.5000	2.257
25	1.864	1.6250	2.257

FJT Adapter
21-900393-XXX

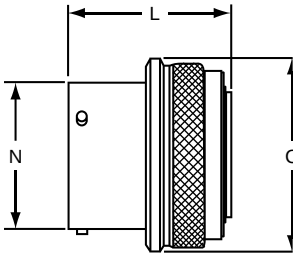

FJT Shell Size	C Dia. +.011 –.010	N Dia. +.001 –.005	L Max.
8	.847	.473	1.397
10	.969	.590	1.397
12	1.143	.750	1.397
14	1.255	.875	1.397
16	1.388	1.000	1.397
18	1.510	1.125	1.397
20	1.633	1.250	1.397
22	1.756	1.375	1.397
24	1.878	1.500	1.397

FLJT Adapter
21-900423-XXX

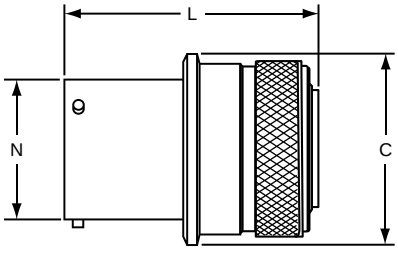

FLJT Shell Size	C Dia. +.011 –.010	N Dia. +.001 –.005	L Max.
9	.920	.572	2.038
11	1.045	.700	2.038
13	1.246	.850	2.038
15	1.371	.975	2.038
17	1.496	1.100	2.038
19	1.616	1.207	2.038
21	1.743	1.332	2.038
23	1.866	1.457	2.038
25	1.991	1.582	2.038

All dimensions for reference only.
Consult Amphenol, Sidney, NY for ordering information.

Transient Protection
MOV– Metal Oxide Varistor Connectors

Amphenol Aerospace

- **Filter connector size package**
- **Protection for 14, 31, 38 DC voltage circuits**
- **Radiation hardened**
- **No additional circuits required**
- **Low impedance**
- **Increased reliability**
- **Nanosecond response time**
- **Elimination of costly external suppression assemblies**

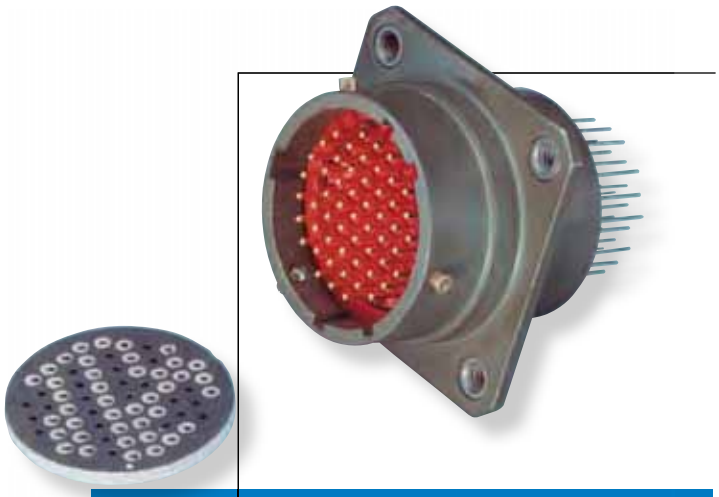

The Amphenol ® MOV Connector offers the versatility of a standard connector, with transient protection for sensitive circuits.Transients in electrical circuits caused by a sudden release of stored energy can originate within or outside of the circuit and may be repeatable or random.

Regardless of frequency or origin, transient caused failures generated by load switching, lightning, electrostatic discharge (ESD) and electromagnetic pulse (EMP) can destroy unprotected IC components.

Compatible with present filter connector assembly procedures, MOVs can be combined with existing filters. Internal housing of the MOV offers weight and space savings over other protection methods available today, and eliminates costly and bulky exterior suppression mechanisms in appropriate situations. MOVs are presently available in contact sizes 22, 20 and 16.

Transient protection can be provided in receptacle, plug or adapter configuration. These connectors are intermateable and intermountable with the following MIL-Specs:

- MIL-DTL-5015
- MIL-DTL-26482
- MIL-DTL-26500
- MIL-DTL-27599
- MIL-DTL-38999
- MIL-DTL-83723

MOV

M.O.V. PERFORMANCE CHARACTERISTICS

Designation	Contact Size	Maximum Rating (125°C)				Specifications (25°C)							Maximum Leakage Current at V_t (dc)		
		Continuous		Transient		Varistor Voltage at 1mA (DC)			Maximum Clamping Voltage V_c at Test Current Ip (8/20µS)		Capacitance at 1 MHz		I_L Max.	I_L Max.	V_t
		DC Voltage	RMS Voltage	Energy (10/1000µS)	Peak Current (8/20µS)						Picofarads		25°C	125°C	
		V_m Volts	V_m Volts	W_{tm} Joules	I_{tm} Amperes	Min. Volts	V_n (dc) Volts	Max. Volts	V_c Volts	I_p Amps	Min.	Max.	µA	µA	DC Volts
F14	22	**14**	10	1.5	250	18.5	**22**	25.5	42	10	800	2000	5	50	14
F31	22	**31**	25	1.5	250	35	**39**	48	85	5	400	1400	5	50	28
F38	22	**38**	30	1.5	250	42	**47**	58	100	5	200	1000	5	50	36
F45	22	**45**	35	1.5	250	53	**59**	68	100	5	200	850	5	50	45
F31	20	**31**	25	2	300	35	**39**	48	85	10	400	1400	5	50	28
F38	20	**38**	30	2	300	42	**47**	58	100	10	200	1000	5	50	36
F45	20	**45**	35	2	300	53	**59**	68	100	10	200	850	5	50	45
F38	16	**38**	30	3	350	42	**47**	58	100	20	200	1000	5	50	36
F45	16	**45**	35	3	350	53	**59**	68	100	20	200	850	5	50	45

NOTE: Continuous voltage ratings are based on 1000 hour reliability assurance tests at 125°C rated ambient temperature per MIL-STD-202 method 108. Contact Amphenol Sidney for options not listed in chart.

The following charts show the typical MOV response to an input pulse open circuit of 1000V and 10A peak square wave with a 5 nanosecond rise time in a 50 Ohm system.

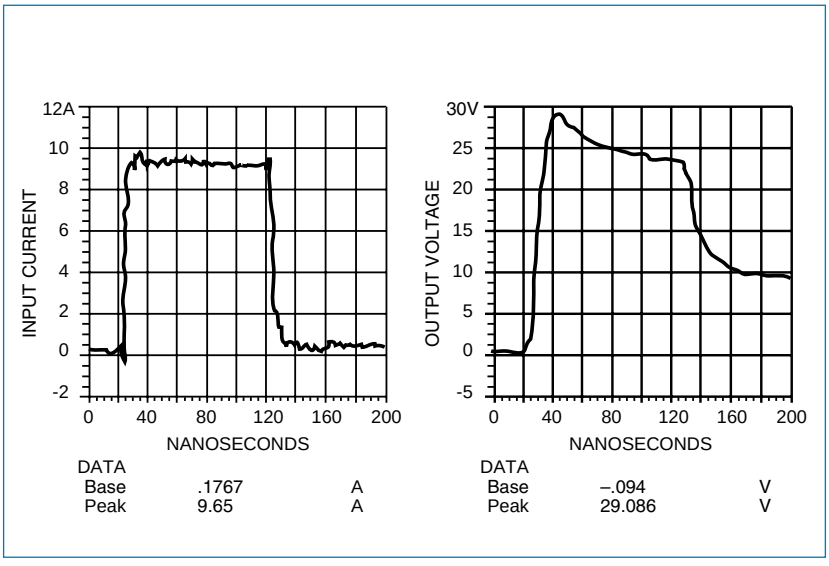

The following chart shows response time and output voltage of a typical MOV with 1000V, 5 nanosecond, 2.5A input pulse mounted in an LJT 13–35P connector. Test was performed without load.

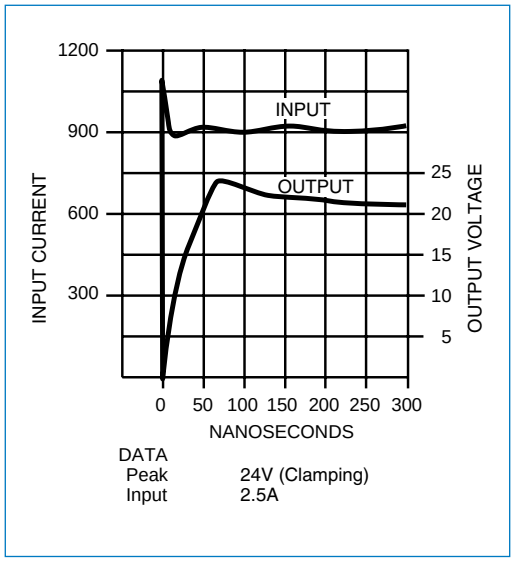

- **Clamping voltage as low as 11.9 volts**
- **Low capacitance – suitable for high frequency applications**
- **Unipolar or bipolar – using existing proven diode technology**
- **Protection for 5.8 to 60 VDC circuits**
- **No additional circuits required**
- **Low impedance – high frequency response**
- **Increased reliability**
- **Nanosecond response time**
- **Elimination of costly external suppression assemblies**
- **Screening to applicable requirements of MIL-S-19500TX/TXV available**
- **Keeps transients outside of the box**
- **Minimizes fast transient voltage overshoot**

The Amphenol® Diode Connector offers the versatility of a standard connector, with transient protection for sensitive circuits, such as TTL Lines.

Transients in electrical circuits caused by a sudden release of stored energy can originate within or outside of the circuit and may be repeatable or random.

Regardless of frequency or origin, transient caused failures generated by load switching, lightning, electrostatic discharge (ESD) and electromagnetic pulse (EMP) can destroy unprotected IC components.

Compatible with present filter connector assembly procedures, diodes can stand alone or can be combined in series with filters. Internal housing of the diode offers weight and space savings over other protection methods available today, and eliminates costly and bulky exterior suppression mechanisms in appropriate situations. Diodes are presently available in contact sizes 22 and 20.

Transient protection can be provided in receptacle, plug or adapter configurations. These connectors are intermateable and intermountable with the following MIL-Specs:

Diode — **Diode Connector and Adapter**

Close-up View of Diode Contact

- MIL-DTL-5015
- MIL-DTL-26482
- MIL-DTL-26500
- MIL-DTL-27599
- MIL-DTL-38999
- MIL-DTL-83723

DIODE CONTACT PULSE TEST, ±5.8 DIODE

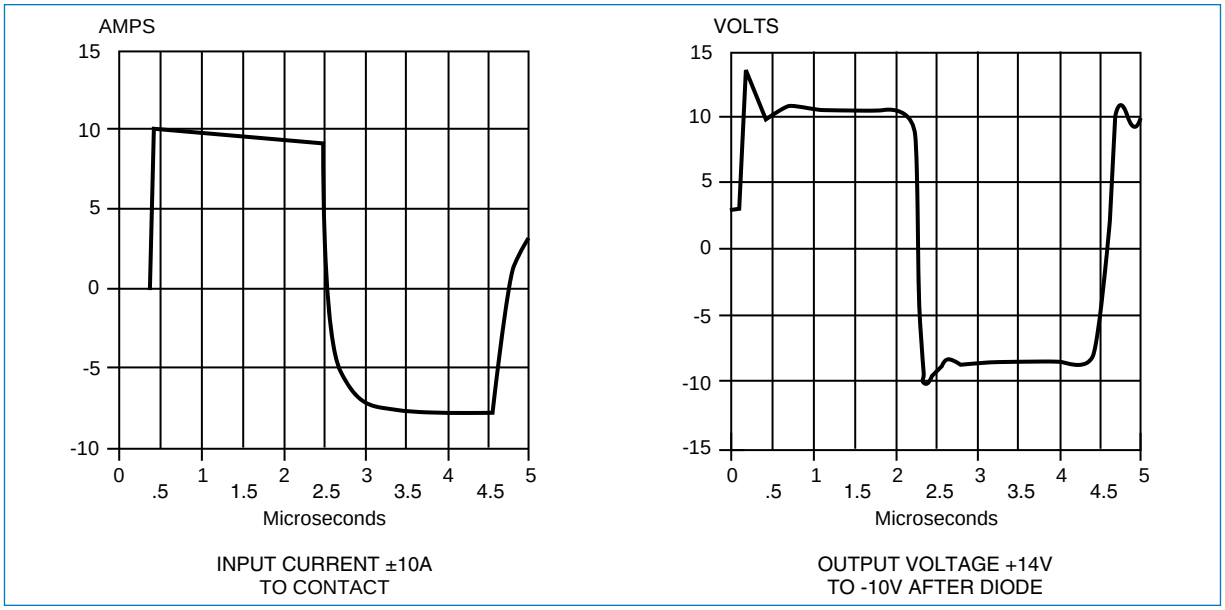

STANDARD DIODE CONNECTOR CHARACTERISTICS AT 25°C

Stand-off Voltage † (VDC)	Max. Capacitance* (pf)	Breakdown Voltage at 1 mA (VDC)	Max. Clamping Voltage (8 x 20µ sec. pulse)	Leakage Current at Stand-off Voltage (µA)	Power Capability † 20µs Exp. Impulse (Peak) (Watts)
+ 5.8	1600	+ 6.45 to + 7.1**	+11.9	<100	1000
± 5.8	1000	± 6.45 to ± 7.1**	±11.9	<150	1000
± 7.0	750	± 7.3 to ± 9.3	±13.5	<10	1000
± 8.0	750	± 8.2 to ±10.6	±15.4	<5	1000
+ 8.0	1500	+ 8.5 to +10.6	+15.4	<5	1000
±10.0	500	±11.1 to ±12.3	±17.0	<1	1000
+10.0	1100	+11.1 to +12.3	+17.0	<1	1000
±15.0	500	±16.7 to ±18.5	±24.9	<1	1000
+15.0	750	+16.2 to +19.2	+24.9	<1	1000
–15.0	750	–16.2 to –19.2	–24.9	<1	1000
±17.0	500	±18.9 to ±23.0	±32.0	<1	1000
+17.1	600	+19.0 to +21.0	+27.7	<1	1000
±22.0	500	±25.7 to ±28.4	±38.0	<1	1000
±25.0	500	±27.8 to ±30.7	±40.5	<1	1000
+28.0	500	+30.5 to +35.7	+46.4	<1	1000
±33.3	500	+37.1 to +41.0	±53.9	<1	1000
+33.3	500	+37.1 to +41.0	+53.9	<1	1000
±40.0	500	±44.4 to ±49.1	±64.5	<1	1000
±45.0	500	±47.1 to ±58.1	±84.2	<1	1000
+57.8	500	+64.6 to +71.4	+95.2	<1	1000
±57.8	500	±64.6 to ±71.4	±95.2	<1	1000

Clamping Time -
Unipolar: Less than 1 nanosecond, 0V to breakdown
Bipolar: Less than 5 nanoseconds, 0V to breakdown
* Lower capacitance devices available; consult Amphenol, Sidney, NY.
**This device only measured at 10ma
† Higher power ratings also available

Amphenol can provide COTS solutions utilizing leaded & surface mounted devices. For more information contact Amphenol Aerospace at 800-678-0141.

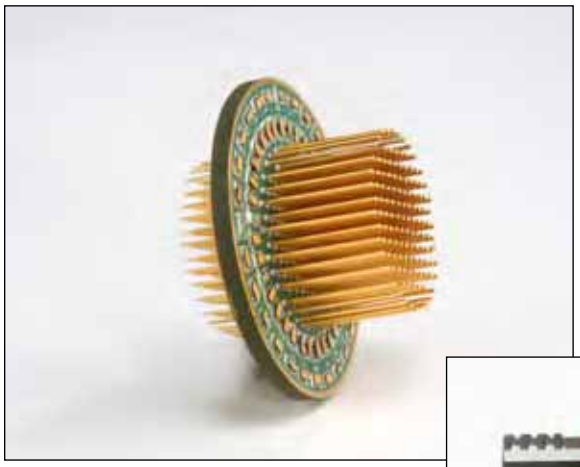

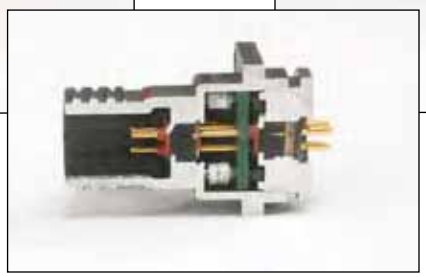

Transient Protection
ESA – Energy Shunting Assembly

Amphenol Aerospace

The Amphenol ® Energy Shunting Assembly (ESA) is a simple, compact unit which provides lightning and electromagnetic pulse (EMP) protection of systems in which many signal lines enter sensitive electronic equipment. The efficient packaging of the ESA circumvents the concept of one protective device per line. It provides a surge arrestor which has the advantage of space saving and simplified assembly when compared to current protective devices which range from diodes to large spark gaps.

The current ESA design consists of two 53-pin contact, Mil-Standard, hermetic connectors assembled back to back, and encompassing a ground plate. A sealed chamber is formed within this thru-bulkhead unit, housing 53 in-line spark gaps. Introducing a controlled atmosphere enhances fast rise breakdown.

The ESA can be integrated with an EMI filter connector which can improve its performance. These two assemblies provide a method to help protect against lightning, EMP, EMI and TEMPEST effects.

ESA Energy Shunting Assembly

Performance Characteristics

1. DC breakdown voltage		230 Volts
2. Maximum rated surge discharge current (8 x 20 microsecond pulse)		5,000 Amperes per pin
3. Insulation resistance		10^{10} ohms minimum
4. Capacitance between each electrode and the ground plane		Less than 2 pf
5. Rate-of-rise breakdown voltage	Maximum Breakdown Voltage (Volts)	Rate of Rise (Volts/microsecond)
	600 800 1,500 2,000	10 1,000 10,000 1000,000
6. Surge breakdown unbalance (at 100 Volts/microseconds)		180 Volts
7. Surge life (500 Ampere – 10 x 1,000 microsecond)		400 Surges
8. Hold-over voltage		100 Volts
9. Arcing voltage		40 Volts
10. Glow to arc transition point		1 Ampere
11. Temperature range		–40°F to 150°F (233°K to 339°K)

The Hermetic Filter Connector

While only approximately 1/2 inch longer than standard series connectors, the hermetic filter connector provides all the benefits of a hermetic connector, as well as EMI protection for sensitive circuits. The filter assembly is protected by a fused glass insert within a unique steel housing. This design accounts for the connector's capability in tolerating high level static pressure, while maintaining a low level leakage rate. Applications include pressurized test equipment, environmental and toxic gas chambers, and moisture sealing on industrial equipment and missiles.

Hermetic Filter Connector

Filtered Plug

This connector is designed for applications where EMI protection is essential, but access to the receptacle is denied. The filtered plug presents an alternative for the electrical engineer. The filter plug is designed with the same components as a standard filter receptacle, but offers the option of being mounted on the cable harness. This device is a cost effective method of achieving EMI protection when length restrictions prohibit inclusion of an adapter to the system.

Filtered Plug

Filter Connectors can also incorporate high frequency coax, twinax, triax, quadrax and differential twinax contacts.

Amphenol MIL-DTL-38999 Series III connectors are the most commonly used connectors for incorporation of shielded contacts along with traditional crimp contacts. High performance shielded coaxial, twinax and triax contacts are available to fit various RG and special cables. They eliminate discontinuities or impedance variations due to movement of parts under axial load. Size 8 quadrax and differential twinax contacts provide high speed data transfers.

Filter Connectors with Coax Shielded Contacts

Filter Connectors with Flex Termination

Flex circuits are available for MIL-DTL-38999, MIL-DTL-5015 and MIL-DTL-26482 filter connectors. They are offered in flat or sculptured styles and provide flexibility in assembling to printed circuit boards. Through Amphenol's Advanced Circuit Technology division, these strong and rigid, yet highly flexible circuits eliminate the need to purchase and attach individual pins or connectors. Thus they promote system automation, reduce space requirements and lower installation costs. Sculptured® Flexible Circuits have built-in terminations which eliminate the failure associated with crimped or soldered-on contacts, and geometrically fit the tight space requirements within a unit.

Flex Circuitry for Attachment to Printed Circuit Boards

MIL-DTL-38999 with Quadrax Contacts

For more information on these specials, consult Amphenol Aerospace and see our website at www.amphenol-aerospace.com.

Amphenol
Fiber Optic Interconnects

CF38999 with MIL-PRF-29504 Size 16 Fiber Optic Termini

CF38999 with Size 20 Fiber Optic Termini

MT38999 with MT Fiber Optic Termini

New Featured

ARINC 801 Fiber Optic Connector and Termini

Hybrid with Fiber Optic Termini and High Speed Contacts

TABLE OF CONTENTS

Fiber Optic Interconnect Products for Military, Aerospace and Harsh Environments

- Table of Contents. 339
- Product Overview 340

Fiber Optic Termini

- MIL-PRF-29504/4 & /5 Multi-Mode Termini, size 16, Pin and Socket . . . 341
- MIL-PRF-29504 Type Single Mode Termini size 16, Pin and Socket. . . . 342
- 90° Multi-Mode Termini, Size 16, Pin and Socket 343
- Multi-mode Termini, HD20, Size 20, Pin and Socket 344

Multi-Channel Circular Connectors with Fiber Optics

- CF38999 Multi-Channel Connectors the Industry Standard 345
  - How to Order. 346
  - Insert Availability 347
  - Insert Arrangements 348, 349
  - Wall Mount Receptacle, Box Mount Receptacle 350
  - Jam Nut Receptacle, Line Receptacle 351
  - Straight Plug 352
- JSFC17 Socket and JSFC18 Pin Contact How to Order 353
- JSFC15 Fiber Optic Receptacle
  JSFC16 Fiber Optic Plug How to Order 354
- JSFC 15 Fiber Optic Receptacle, JSFC 16 Fiber Optic Plug Shell Styles 355
- ARINC 801 Genderless, Keyed Termini 356
- Multi-Channel, MIL-DTL-38999 III with ARINC 801 Inserts 357
- MT Ferrule Termini 358
- Multi-Channel Fiber Optic with MT Ferrule Inserts, How to Order. 359
- Fiber Optic Bulkhead Feed-Through with Size 16 Pin Termini 360
- Accessories for Circular Connectors 361
- Application Tools for Multi-Mode Termini. 362
- Fiber Optic Cable Systems 363
- Fiber Optic Cable Systems Designer's Guide 364

Fiber Optic Interconnects Markets:

- Military & Commercial Aviation
- Military Vehicles
- Radar, Missiles & Battlefield Equipment
- Medical & Test Equipment
- C4ISR

Amphenol Aerospace

Fiber Optics in MIL-DTL-38999 Series III Connectors

Amphenol Aerospace offers a wide range of fiber optic interconnect solutions for use in the harsh environments found in military and aerospace applications. Amphenol Aerospace has established the rugged and reliable MIL-DTL-38999 as a common connector shell platform that houses a wide variety of fiber optic termini including MIL-PRF-29504*, HDF20, ARINC 801 and MT ferrules.

MIL-DTL-38999 Series III Tri-Start connectors are available in various insert arrangements, materials and finishes to meet any type of environmental requirement. Our MIL-PRF-29504 and HD20 termini can be combined with most of our copper contacts to create a large assortment of hybrid fiber/copper connector combinations.

*MIL-PRF-29504 supersedes MIL-T-29504. (MIL-T-29504 is still available; consult Amphenol Aerospace for more information.)

Connector	Termination	Features
	MIL-PRF-29504	CF38999 Pin and socket termini that feature high precision, pre-radiused ceramic ferrules to help improve insertion loss performance and reduce polishing time. Products are available in both single mode and multi-mode versions. The socket has a plastic protective shroud over the ceramic alignment sleeve that incorporates a built-in anti-rotation feature. **HD20** - Pin and socket termini that have the same benefits of the MIL-PRF-29504 termini, but in a smaller, size 20 contact that allows for increased density in D38999 connector shells.
	JSF	Tight tolerance, nickel-plated composite plugs and receptacles approved for use in F35/JSF applications.
	ARINC 801 termini	Genderless fiber optic termini that use a precision 1.25 mm ceramic ferrule. Precision inserts with guide pins and keyed termini enhance multi-mode and single mode performance. ARINC 801 termini facilitate an angled polish for improved return loss.
	MT ferrules	Industry-standard, very high density plastic ferrules available in either 12-fiber or 24-fiber versions, in multi-mode PC, single mode PC, and single mode APC configurations.

Amphenol Aerospace also supplies a wide range of rectangular interconnect products containing MIL-PRF-29504 HD20 and MT Fiber Optic termini. Our rectangular interconnect products include a variety of applications including LRM surface mount and rack & panel styles - all available in hybrid fiber/copper configurations

Amphenol Aerospace

Size 16, Pin and Socket

HOW TO ORDER

Fiber Optic Pins Ordering Information

Amphenol Part Number	Fiber Size† Core/Cladding	A Dia. Ref. (Microns)	Ferrule Hole Tolerance	Reference Only M29504/4-XXXX
CF-198142-125	9/125 (Single mode)	125	+1,–0	M201504/4-4300*
CF-198142-25A	9/125 (Single mode)	125.5	+1,–0	M29504/4-4208*
CF-198142-126	9/125 (Single mode)	126	+1,–0	M29504/4-4209*
CF-198036-010	50/125 & 62.5/125	127	+2,–0	Superseded by MIL-PRF
CF-198142-010	50/125 & 62.5/125	127	+2,–0	M29504/4-4040*
CF-198036-017	100/140	145	+3,–0	Superseded by MIL-PRF
CF-198142-017	100/140	145	+3,–0	M29504/4-4044*
CF-198036-29A	100/140/172 (Polyimide)	173	+1,–0	Superseded by MIL-PRF
CF-198142-29A	100/140/172 (Polyimide)	173	+1,–0	M29504/4-4293*
CF-198036-053	200/230	236	+4,–0	Superseded by MIL-PRF
CF-198142-053	200/230	236	+4,–0	M29504/4-4214*

Fiber Optic Sockets Ordering Information

Amphenol Part Number	Fiber Size† Core/Cladding	A Dia. Ref. (Microns)	Ferrule Hole Tolerance	Alignment Sleeve**	Reference Only M29504/5-XXXX
CF-198143-125	9/125 (Single mode)	125	+1,–0	C	M29504/5-4309*
CF-198143-25A	9/125 (Single mode)	125.5	+1,–0	C	M29504/4-4237*
CF-198143-126	9/125 (Single mode)	126	+1,–0	C	M29504/5-4238*
CF-198035-010	50/125 & 62.5/125	127	+2,–0	M	Superseded by MIL-PRF
CF-198143-010	50/125 & 62.5/125	127	+2,–0	C	M29504/5-4046*
CF-198035-017	100/140	145	+3,–0	M	Superseded by MIL-PRF
CF-198143-017	100/140	145	+3,–0	C	M29504/5-4050*
CF-198035-29A	100/140/172 (Polyimide)	173	+1,–0	M	Superseded by MIL-PRF
CF-198143-29A	100/140/172 (Polyimide)	173	+1,–0	C	M29504/5-4296*
CF-198035-053	200/230	236	+4,–0	M	Superseded by MIL-PRF
CF-198143-053	200/230	236	+4,–0	C	M29504/5-4243*

* Consult Amphenol Aerospace, Sidney NY for qualification status.

† Additional fiber optic termini sizes available upon request; consult Amphenol Aerospace for availability.

** C = Ceramic
M = Metal

Multi-mode Size 16 Fiber Optic Termini
Designed for use in the size 16 contact cavities of Multi-channel MIL-DTL-38999 Series III Connectors and CF38999 Fiber Optic Connectors

Single Mode Size 16 Fiber Optic Termini
Designed for use in the size 16 contact cavities of Amphenol CF38999 Fiber Optic Connectors

MIL-PRF-29504 Type Single Mode Termini
Size 16, Pin and Socket

Amphenol® Multi-mode, Size 16 Termini Features:

- Designed for use in size 16 cavities of MIL-DTL-38999 Series III and Amphenol CF38999 connectors
- Precision ceramic ferrules which precisely position the fiber within the termini.
- Material, provides protection for the ceramic alignment sleeve.
- Stainless steel termini bodies and springs.
- Allows for multiple fiber accommodations

Amphenol® Single mode, Size 16 Termini Features:

- Precision ceramic alignment sleeves insure accurate fiber to fiber alignment.
- Socket has threaded protective shroud with anti-rotation key, manufactured from rugged PEEK™
- Designed with similar high performance components as the size 16 multi-mode termini
- Maintains fiber optic/electrical hybrid capabilities

Size 16 Single Mode Pin Termini — CF-198036-XXX

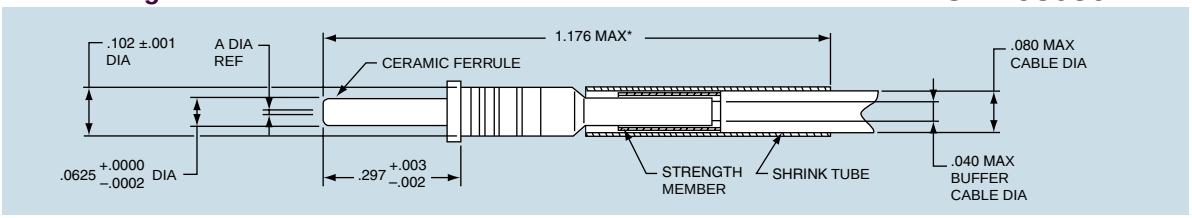

Size 16 Single Mode Socket Termini — CF-198035-XXX

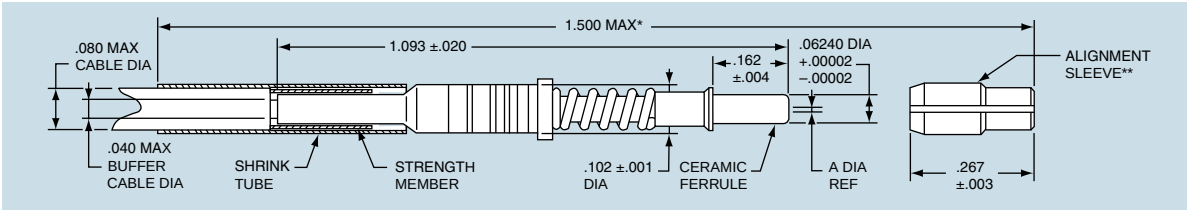

Size 16 Multi-Mode Pin Termini — CF-198142-XXX

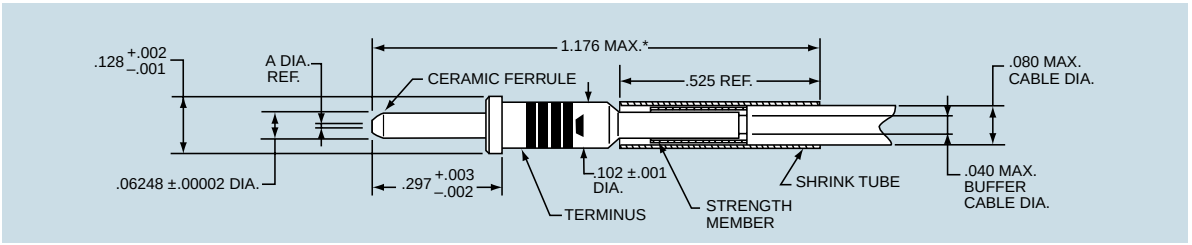

Size 16 Multi-Mode Socket Termini — CF-198143-XXX

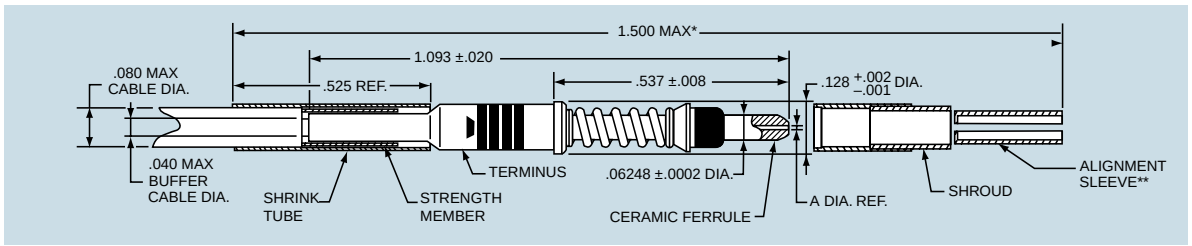

* Indicated dimension when fully assembled.
** Alignment sleeve shipped unassembled.
All dimensions for reference only.

90° Multi-Mode Termini
Size 16, Pin and Socket

Amphenol provides 90°, size 16 fiber optic termini that can be used with multi-channel circular connectors. Consult Amphenol for the 90°, size 16 termini for use in LRM rectangular connectors. (Please consult Amphenol for availability of 90° size 20 termini).

90° Socket Termini (Size 16)

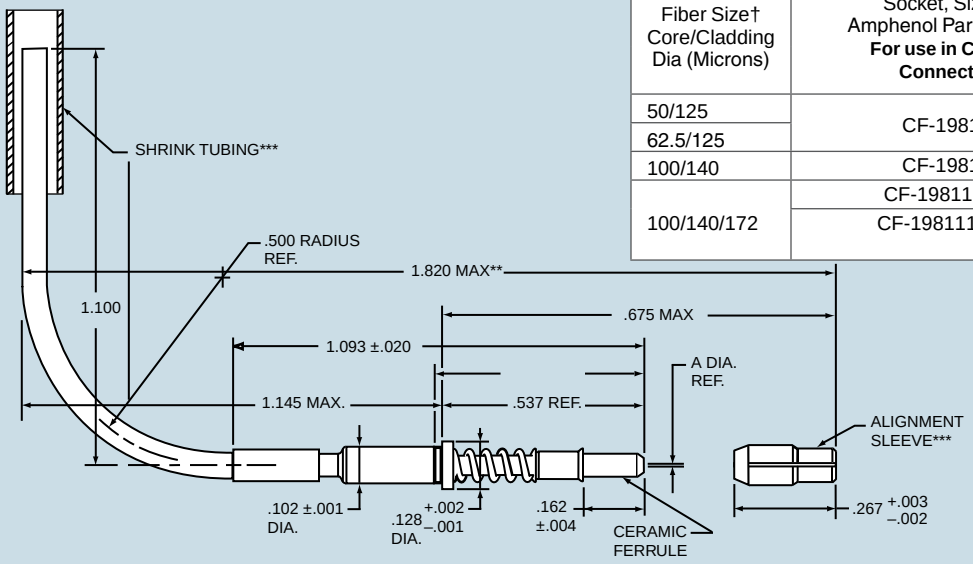

Ordering Information for 90° Multi-mode Socket Termini

Fiber Size† Core/Cladding Dia (Microns)	Socket, Size 16 Amphenol Part Number **For use in Circular Connectors**		A Dia Ref	
			Inches	Microns
50/125	CF-198111-010		.0050	127
62.5/125				
100/140	CF-198111-017		.0057	145
100/140/172	CF-198111-29	OR	.0069	175
	CF-198111-29A		.0068	173

† Additional sizes available upon request: consult Amphenol, Sidney, NY for availability.
* Consult Amphenol, Sidney, NY for ordering information.
** Indicated dimension when fully assembled.
*** Shrink tubing and alignment sleeve are shipped unassembled.
For 90°, size 16 fiber optic termini for use in LRM rectangular connectors consult Amphenol, Sidney NY.
All dimensions for reference only.

90° Pin Termini (Size 16)

Ordering Information for 90° Multi-mode Pin Termini

Fiber Size† Core/Cladding Dia (Microns)	Pin, Size 16 Amphenol Part Number **For use in Circular Connectors**		A Dia Ref		B Max (Inches)	C Ref (Inches)
			Inches	Microns		
50/125	CF-198110-010		.0050	127	1.121	1.100
62.5/125						
100/140	CF-198110-017		.0057	145	1.121	1.100
100/140/172	CF-198110-029	OR	.0069	175	1.121	1.100
	CF-198110-29A		.0068	173	1.121	1.100
50/125	CF-198112-010		.0050	127	1.003	.900
62.5/125						
100/140	CF-198112-017		.0057	145	1.003	.900
100/140/172	CF-198112-029	OR	.0069	175	1.003	.900
	CF-198112-29A		.0068	173	1.003	.900

† Additional sizes available upon request: consult Amphenol, Sidney, NY for availability.
* Consult Amphenol, Sidney, NY for ordering information.
For 90°, size 16 fiber optic termini for use in LRM rectangular connectors consult Amphenol, Sidney NY.
All dimensions for reference only.

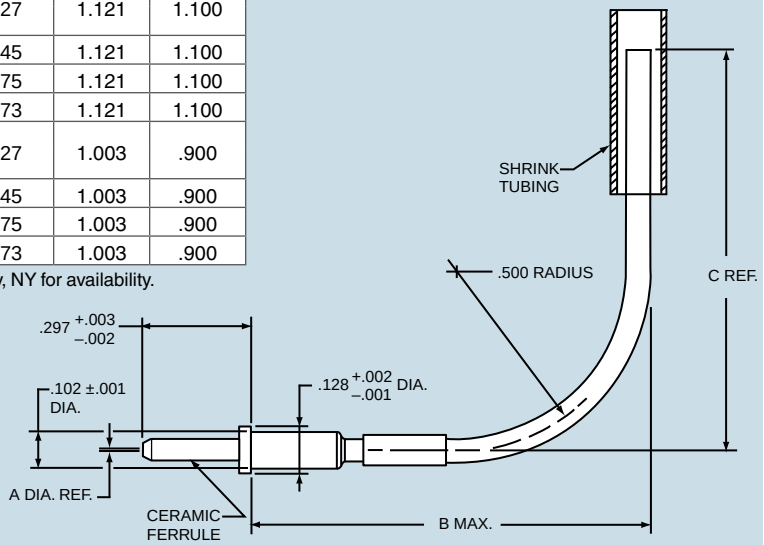

Multi-Mode Termini, HD20

Size 20, Pin and Socket

Multi-mode HDF20 Fiber Optic Termini
Designed for use in the size 20 contact cavities of Multi-channel MIL-DTL-38999 Series III Connectors and Amphenol CF38999 Fiber Optic Connectors

HOW TO ORDER

Multi-mode Termini (Size 20) for MIL-DTL-38999 Connectors

Fiber Size† Core/Cladding Dia (Microns)	Amphenol Part Numbers		A Dia. Ref. (Microns)	Ferrule Hole Tolerance
	Size 20 Socket	Size 20 Pin		
50/125	CF-198080-010	CF-198081-010	127	+3,–0
62.5/125				
100/140	CF-198080-017	CF-198081-017	145	+3,–0

† Additional sizes available upon request: consult Sidney, NY for availability.

Amphenol® Multi-mode, Size 20 Termini Features:

- 1mm precision ceramic ferrules
- Offers increased termini density
- Designed with similar high performance components as size 16 termini
- Maintains fiber optic/electrical hybrid capabilities
- Termination accomplished using epoxy/polish method.

Size 20 Multi-mode Pin Terminus

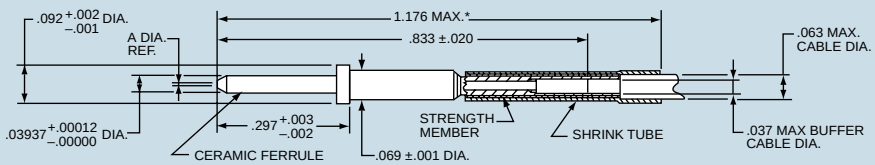

Size 20 Multi-mode Socket Terminus

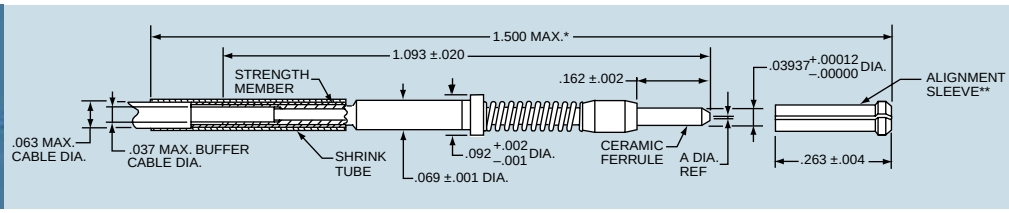

Amphenol® Multi-Channel fiber optic connectors are supplied less termini. Order multi-mode termini by Amphenol part number designation as shown in the chart below. Consult Amphenol, Sidney, NY for further availability.

* Indicated dimension when fully assembled.
** Alignment sleeve shipped unassembled.
All dimensions for reference only.

- Meets or exceeds MIL-DTL-38999 Series III requirements
- EMI Shielding-solid metal to metal coupling, grounding fingers, electroless nickel plating, and thicker wall sections provide superior EMI shielding capability of 65dB min. at 10 GHz.
- Termini Protection-recessed pins in this 100% scoop-proof connector minimize potential termini damage
- Corrosion Resistance-shells of stainless steel or cadmium over nickel plating withstand 500 hr. salt spray exposure
- Vibration/Shock-operates under severe high temperature vibration
- Threaded coupling quickly and completely mates in one 360° turn of the coupling nut

Additional, composite connectors features include:

- Lightweight - 17%-70% weight savings
- Increased Corrosion Resistance-olive drab cadmium (175°C) and electroless nickel plating (200°C) both withstand 2000 hours of salt spray exposure.
- Durability-1500 couplings minimum (in reference to connector couplings, not termini)

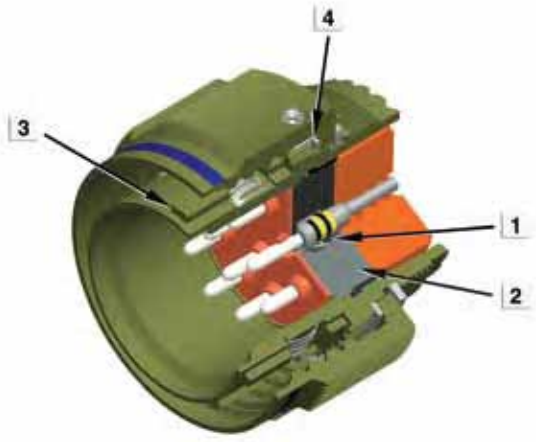

The illustration above shows the key features of the CF38999. The highest optical performance connector conforming to MIL-DTL-38999

1. *Beryllium-copper retention clip for improved termini stability*
2. *Precision-aligned inserts*
3. *Modified master key*
4. *Integrated wave washer for improved performance in high vibration environments*

MECHANICAL/ENVIRONMENTAL

PARAMETER	PERFORMANCE
Maintenance Aging	MIL-STD-1344 Method 2002
Mating Durability	500 mating cycles
Insert Retention	100 PSI/25 lbs minimum
Sine Vibration	60 G (140-2000 Hz), 4 hours each at ambient, -55 deg C, and +175 deg C
Standard Shock	300 G half-sine, 3 ms duration
High Impact Shock	MIL-S-901 grade A with lightweight fixture
Temperature Life	1000 hours @ high temp rating
Thermal Shock	-55° C to +165° C - 5 cycles

MATERIALS & FINISH CHARACTERISTICS

SHELL MATERIAL/FINISH	TEMPERA-TURE RATING (DEG C)	SALT SPRAY RATING (HOURS)	MIL-DTL-38999 SERVICE CLASS
Aluminum/Durmalon	-65 to +175	500	T
Aluminum/electroless nickel	-65 to +200	500	F
Aluminum/olive drab cadmium plate nickel base	-65 to +175	500	W
Stainless steel	-65 to +200	500	K
Composite/electroless nickel	-65 to +200	2000	M
Composite/ olive drab cadmium plate nickel base	-65 to +175	2000	J

Easy Steps to build a part number... Tri-Start Series III

1. Connector Type	2. Material	3. Finish	4. Shell Style	5. Shell Size- Insert Arrangement	6. Contact Type & Key/ Keyway Position
CF–	50	9	0	17-08	P

Amphenol® Multi-Channel fiber optic connectors for use with multi-mode and single mode termini can be ordered by coded part number. Ordering procedure is illustrated by part number CF-509017-08P as shown above:

Step 1. Select a Connector Type

	Designates
CF–	Multi-Channel Fiber Optic Connector
DF–	Multi-Channel Fiber Optic Connector supplied per D38999 with sealing plugs and insertion/removal tools

Step 2. Select a Material

	Designates
50	Aluminum shell
60	Composite shell
80	Stainless steel shell

Step 3. Select a Finish

	Designates
4	Electroless nickel plated aluminum, 48 hour salt spray resistance, 200°C
5	Unplated composite
6	Corrosion resistant stainless steel, 500 hour salt spray resistance, 200°C
9	Corrosion resistant olive drab cadmium plate aluminum, 500 hour salt spray resistance, 175°C
D	Designates Durmalon™ (Nickel-PTFE)*
S	Nickel plated stainless steel

Step 4. Select a Shell Style

	Designates
0	Wall mount receptacle
1	Line receptacle
2	Box mount receptacle
5	Straight plug less ground strap
6	Straight plug
7	Jam nut receptacle

Step 5. Select a Shell Size – Insert Arrangement from proceeding pages.

Shell size & Insert Arrangement are on page 347.
First number represents Shell Size, second number is the Insert Arrangement.

Step 6. Select a Contact Type & Key/Keyway Position

Contact Type and Key/Keyway Position

P designates pin contacts
S designates socket contacts
For key/keyway positioning, choose the alternate rotation suffix letter from the chart below.

ALTERNATE POSITION SUFFIX

Alternate Position	Suffix Letter	
	Pins	Sockets
Normal	P	S
A	G	H
B	I	J
C	K	L
D	M	N
E	R	T

For more information on key/keyway rotation, see the Series III MIL-DTL-38999 Section.

*Durmalon is a trademark of Amphenol. For more information on Durmalon, go to www.amphenol-aerospace.com/durmalon.asp

Fiber optic termini can be accommodated in any size 16 or size 20 contact cavity of MIL-DTL-38999 Series III type connector insert patterns, as listed in the following chart. For availability of fiber type, either multi-mode or single mode, see note at bottom of chart.

Shell Size/ Arrangement	Total Contacts	Contact Size							
		22D	Optic Termini Availability*		12	12 (Coax)	10 (Power)	8 (Coax)	8 (Twinax) ✦
			20	16					
09-94	2		2						
09-98	3		3						
11-02	2			2					
11-05	5		5						
11-98	6		6						
11-99	7		7						
13-04	4			4					
13-08	8		8						
13-13	4			2**	2				
13-98	10		10						
15-05	5			5					
15-15	15		14	1					
15-18	18		18						
15-19	19		19						
15-97	12		8	4					
17-08	8			8					
17-26	26		26						
17-99	23		21	2					
19-11	11			11					
19-28	28		26	2					
19-32	32		32						
21-16	16			16					
21-29	27		19	4	4				
21-39	39		37	2					
21-41	41		41						
23-21	21			21					
23-53	53		53						
23-54	53	40		9	4				
23-55	55		55						
25-04	56		48	8					
25-11***	11		2				9		
25-20***	30		10	13		4			3
25-24	24			12	12				
25-26	25		16		5			4	
25-29	29			29					
25-37	37			37					
25-41	41	22	3	11		2			3
25-43	43		23	20					
25-46	46		40	4				2†	
25-61	61		61						
25-90	46		40	4					2
25-F4	66	49		13	4				

* Size 16 multi-mode and single mode fiber optic termini are readily available. For size 20 multi-mode termini consult Amphenol Aerospace for availability.
** Two size 16 contacts dedicated to fiber optics.
*** For use in MIL-STD-1760 applications. See 38999 Series III section in this catalog.
† For RG180/U and RG195/U cables only. Contact Amphenol for other cable applications.
F Size 8 coax and Twinax are interchangeable.
For service ratings and performance of electrical contacts see 38999 Series III section in this catalog.

Multi-Channel Fiber Optic Circular
(CF38999) Insert Arrangements

Front face of pin inserts illustrated

Insert Arrangement	09-94	09-98	11-02	11-05	11-98	11-99	13-04	13-08
Number of Contacts	2	3	2	5	6	7	4	8
Contact Size	20	20	16	20	20	20	16	20

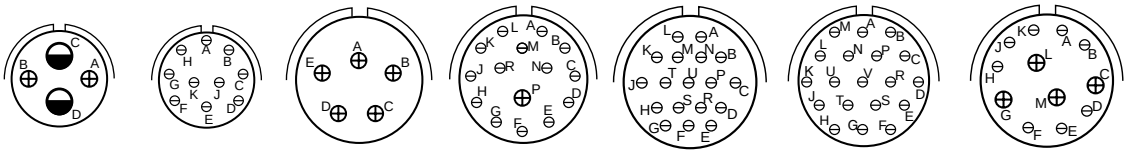

Insert Arrangement	13-13		13-98	15-05	15-15		15-18	15-19	15-97	
Number of Contacts	2	2	10	5	14	1	18	19	8	4
Contact Size	16	12	20	16	20	16	20	20	20	16
	Dedicated to Fiber Optics									

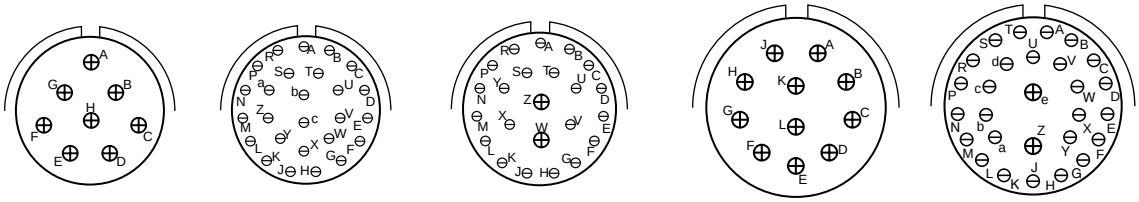

Insert Arrangement	17-08	17-26	17-99		19-11	19-28	
Number of Contacts	2	26	21	2	11	26	2
Contact Size	16	20	20	16	16	20	16

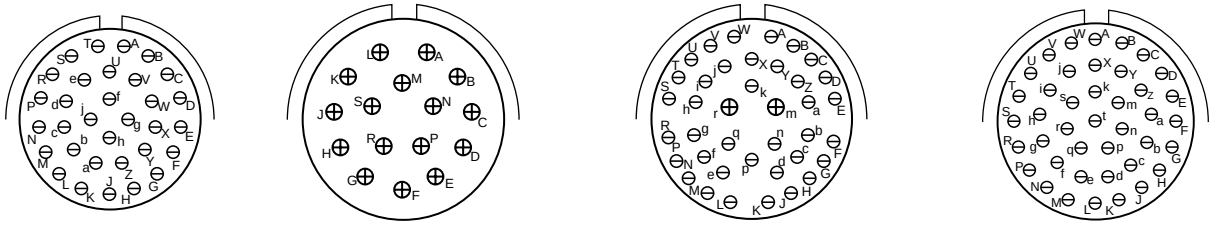

Insert Arrangement	19-32	21-16	21-39		21-41
Number of Contacts	32	16	37	2	41
Contact Size	20	16	20	16	20

CONTACT LEGEND 8 10 12 16 20 22D

Front face of pin inserts illustrated

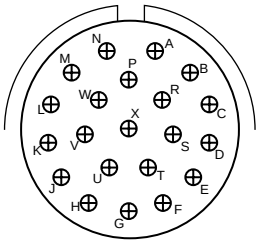

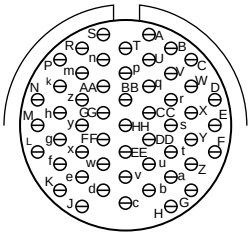

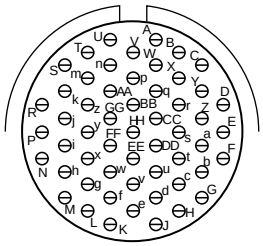

Insert Arrangement	23-21	23-53	23-55
Number of Contacts	21	53	55
Contact Size	16	20	20

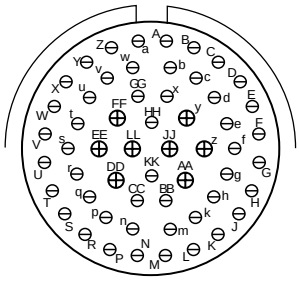

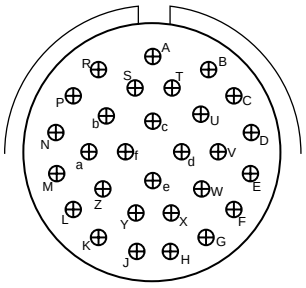

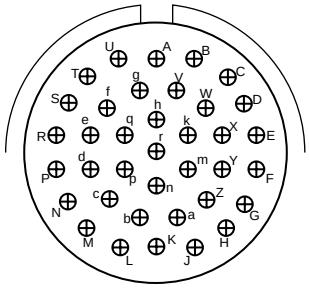

Insert Arrangement	25-04		**25-29**	**25-37**
Number of Contacts	48	6	29	37
Contact Size	20	16	16	16

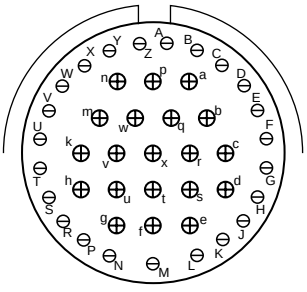

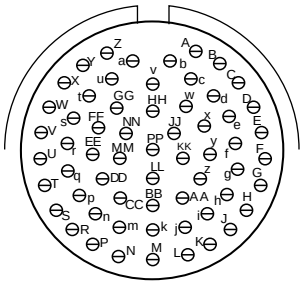

Insert Arrangement	25-43		**25-61**
Number of Contacts	23	20	61
Contact Size	20	16	20

*** For use in MIL-STD-1760 applications. See 38999 Series III section in this catalog.
† **12 Coax Contacts can be Matched Impedance or Power**

CONTACT LEGEND **8** **10** **12** **16** **20** **22D**

TRI-START™ METAL AND COMPOSITE CONNECTORS

Wall Mount Receptacle with Fiber Optics shell style 0

For complete part number, see how to order, page 346.

† Red Band indicates fully mated
†† Blue band indicates rear release contact retention system

Designates true position dimensioning

All dimensions for reference only

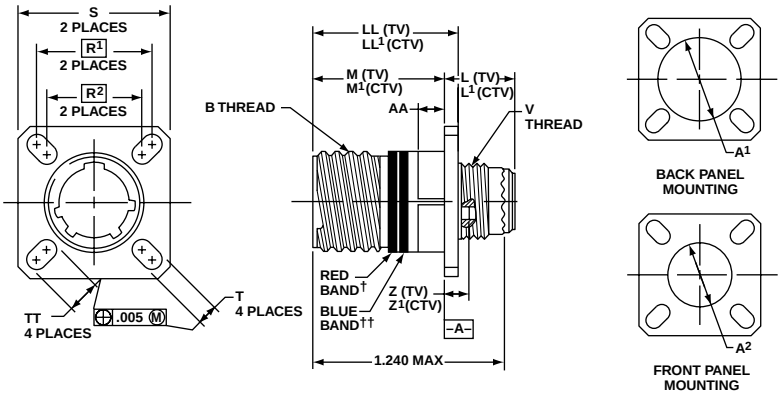

Shell Size	MS Shell Size Code	B Thread Class 2A 0.1P-0.3L-TS (Plated)	L Max. (TV)	L1 Max. (CTV)	M +.000 –.005 (TV)	M1 +.000 –.005 (CTV)	R1	R2	S Max.	T +.008	V Thread Metric	Z Max. (TV)	Z1 Max. (CTV)	A1 Dia. Back Panel Mount	A2 Dia. Front Panel Mount	AA Max. Panel Thickness	LL +.006 –.000 (TV)	LL1 ±.005 (CTV)	TT ±.008
9	A	.6250	.469	.514	.820	.773	.719	.594	.948	.128	M12X1-6g	.153	.198	.650	.510	.234	.905	.908	.216
11	B	.7500	.469	.514	.820	.773	.812	.719	1.043	.128	M15X1-6g	.153	.198	.800	.620	.234	.905	.908	.194
13	C	.8750	.469	.514	.820	.773	.906	.812	1.137	.128	M18X1-6g	.153	.198	.910	.740	.234	.905	.908	.194
15	D	1.0000	.469	.514	.820	.773	.969	.906	1.232	.128	M22X1-6g	.153	.198	1.040	.900	.234	.905	.908	.173
17	E	1.1875	.469	.514	.820	.773	1.062	.969	1.323	.128	M25X1-6g	.153	.198	1.210	1.010	.234	.905	.908	.194
19	F	1.2500	.469	.514	.820	.773	1.156	1.062	1.449	.128	M28X1-6g	.153	.198	1.280	1.130	.234	.905	.908	.194
21	G	1.3750	.500	.545	.790	.741	1.250	1.156	1.575	.128	M31X1-6g	.183	.228	1.410	1.250	.204	.905	.904	.194
23	H	1.5000	.500	.545	.790	.741	1.375	1.250	1.701	.154	M34X1-6g	.183	.228	1.530	1.360	.204	.905	.904	.242
25	J	1.6250	.500	.545	.790	.741	1.500	1.375	1.823	.154	M37X1-6g	.183	.228	1.660	1.470	.204	.905	.904	.242

Box Mount Receptacle with Fiber Optics shell style 2

For complete part number, see how to order, page 346.
Consult Amphenol Aerospace for availability of composite box mount receptacles.

† Red Band indicates fully mated
†† Blue band indicates rear release contact retention system

Designates true position dimensioning

All dimensions for reference only

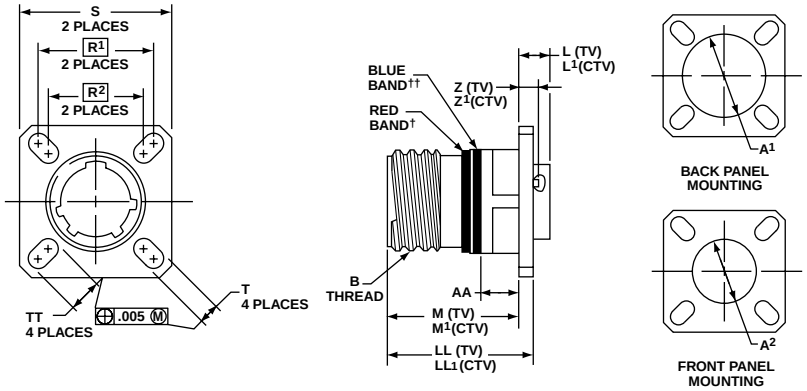

Shell Size	MS Shell Size Code	B Thread Class 2A 0.1P-0.3L-TS (Plated)	L Max. (TV)	L1 Max. (CTV)	M +.000 –.005 (TV)	M1 +.000 –.005 (CTV)	R1	R2	S Max	T +.008	Z Max. (TV)	Z1 Max. (CTV)	A1 Dia. Back Panel Mount	A2 Dia. Front Panel Mount	AA Max. Panel Thickness	LL +.006 –.000 (TV)	LL1 ±.005 (CTV)	TT ±.008
9	A	.6250	.205	.250	.820	.773	.719	.594	.948	.128	.153	.198	.650	.510	.234	.905	.908	.216
11	B	.7500	.205	.250	.820	.773	.812	.719	1.043	.128	.153	.198	.800	.620	.234	.905	.908	.194
13	C	.8750	.205	.250	.820	.773	.906	.812	1.137	.128	.153	.198	.910	.740	.234	.905	.908	.194
15	D	1.0000	.205	.250	.820	.773	.969	.906	1.232	.128	.153	.198	1.040	.900	.234	.905	.908	.173
17	E	1.1875	.205	.250	.820	.773	1.062	.969	1.323	.128	.153	.198	1.210	1.010	.234	.905	.908	.194
19	F	1.2500	.205	.250	.820	.773	1.156	1.062	1.449	.128	.153	.198	1.280	1.130	.234	.905	.908	.194
21	G	1.3750	.235	.280	.790	.741	1.250	1.156	1.575	.128	.183	.228	1.410	1.250	.204	.905	.904	.194
23	H	1.5000	.235	.280	.790	.741	1.375	1.250	1.701	.154	.183	.228	1.530	1.360	.204	.905	.904	.242
25	J	1.6250	.235	.280	.790	.741	1.500	1.375	1.823	.154	.183	.228	1.660	1.470	.204	.905	.904	.242

TRI-START™ METAL AND COMPOSITE CONNECTORS

Jam Nut Receptacle with Fiber Optics shell style 7

For complete part number,
see how to order, page 346.

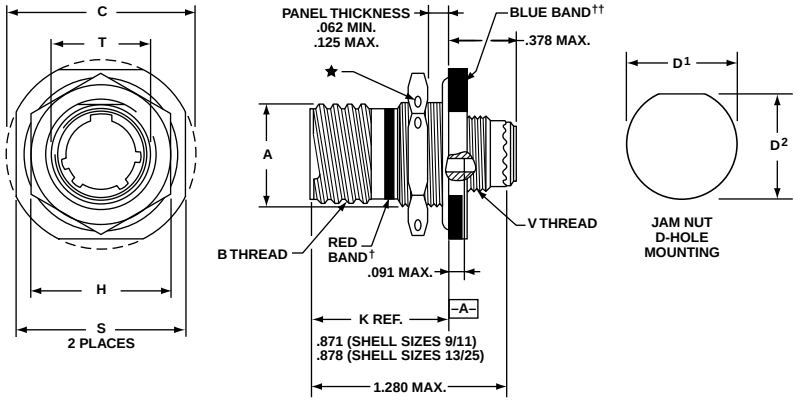

† Red Band indicates fully mated
†† Blue band indicates rear release contact retention system

★ .059 dia. min. 3 lockwire holes
Formed lockwire hole design (6 holes) is optional
All dimensions for reference only

Shell Size	MS Shell Size Code	A• +.000 –.010	B Thread Class 2A 0.1P-0.3L-TS (Plated)	C Max.	D¹ +.010 –.000	D² +.000 –.010	H Hex +.017 –.016	S ±.010	T +.010 –.000	V Thread Metric
9	A	.669	.6250	1.199	.700	.670	.875	1.062	.697	M12X1-6g
11	B	.769	.7500	1.386	.825	.770	1.000	1.250	.822	M15X1-6g
13	C	.955	.8750	1.511	1.010	.955	1.188	1.375	1.007	M18X1-6g
15	D	1.084	1.0000	1.636	1.135	1.085	1.312	1.500	1.134	M22X1-6g
17	E	1.208	1.1875	1.761	1.260	1.210	1.438	1.625	1.259	M25X1-6g
19	F	1.333	1.2500	1.949	1.385	1.335	1.562	1.812	1.384	M28X1-6g
21	G	1.459	1.3750	2.073	1.510	1.460	1.688	1.938	1.507	M31X1-6g
23	H	1.575	1.5000	2.199	1.635	1.585	1.812	2.062	1.634	M34X1-6g
25	J	1.709	1.6250	2.323	1.760	1.710	2.000	2.188	1.759	M37X1-6g

Line Receptacle with Fiber Optics shell style 1

For complete part number,
see how to order, page 346.

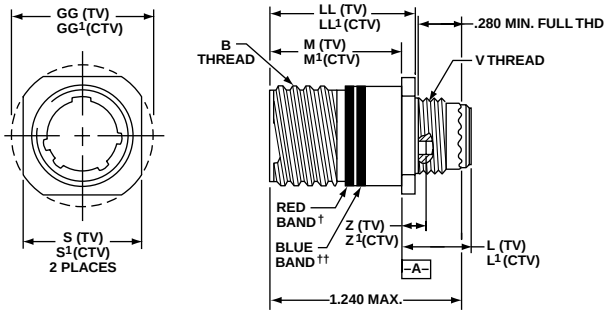

† Red Band indicates fully mated
†† Blue band indicates rear release contact retention system
All dimensions for reference only

Shell Size	MS Shell Size Code	B Thread 0.1P-0.3L-TS-2A (Plated)	L Max. (TV)	L¹ Max. (CTV)	M +.000 –.005 (TV)	M¹ +.000 –.005 (CTV)	S ±.010 (TV)	S¹ ±.010 (CTV)	V Thread Metric	Z Max. (TV)	Z¹ Max. (CTV)	GG Dia. ±.010 (TV)	GG¹ Dia. ±.010 (CTV)	LL +.006 –.000 (TV)	LL¹ ±.005 (CTV)
9	A	.6250	.469	.514	.820	.773	.675	.635	M12X1-6g	.153	.198	.812	.699	.905	.908
11	B	.7500	.469	.514	.820	.773	.800	.765	M15X1-6g	.153	.198	.905	.875	.905	.908
13	C	.8750	.469	.514	.820	.773	.925	.885	M18X1-6g	.153	.198	1.093	1.007	.905	.908
15	D	1.0000	.469	.514	.820	.773	1.050	1.100	M22X1-6g	.153	.198	1.219	1.140	.905	.908
17	E	1.1875	.469	.514	.820	.773	1.238	1.197	M25X1-6g	.153	.198	1.375	1.229	.905	.908
19	F	1.2500	.469	.514	.820	.773	1.300	1.260	M28X1-6g	.153	.198	1.469	1.380	.905	.908
21	G	1.3750	.500	.545	.790	.741	1.425	1.385	M31X1-6g	.183	.228	1.625	1.493	.905	.904
23	H	1.5000	.500	.545	.790	.741	1.550	1.510	M34X1-6g	.183	.228	1.750	1.626	.905	.904
25	J	1.6250	.500	.545	.790	.741	1.675	1.635	M37X1-6g	.183	.228	1.875	1.777	.905	.904

TRI-START™ METAL AND COMPOSITE CONNECTORS

Straight Plug with Fiber Optics shell style 6

For complete part number, see how to order, page 346.

METAL

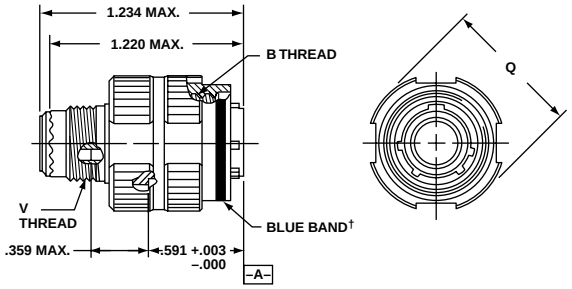

COMPOSITE

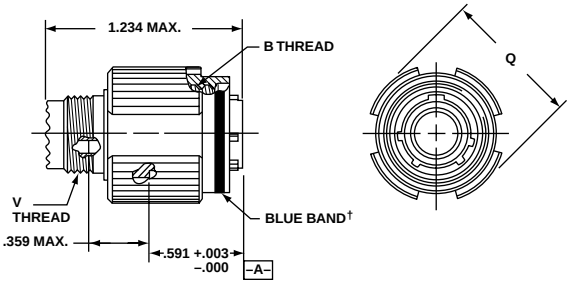

† Blue band indicates rear release contact retention system

Straight Plug

Shell Size	MS Shell Size Code	B Thread 0.1P-0.3L-TS-2B (Plated)	Q Dia. Max.	V Thread Metric
9	A	.6250	.858	M12X1-6g
11	B	.7500	.984	M15X1-6g
13	C	.8750	1.157	M18X1-6g
15	D	1.0000	1.280	M22X1-6g
17	E	1.1875	1.406	M25X1-6g
19	F	1.2500	1.516	M28X1-6g
21	G	1.3750	1.642	M31X1-6g
23	H	1.5000	1.768	M34X1-6g
25	J	1.6250	1.890	M37X1-6g

HOW TO ORDER

Fiber Optic Pin Ordering Information

	Amphenol Part No.	Fiber Size Core/Cladding	A Dia. Ref. (Microns)	Ferrule Hole Tolerance
JSFC18-1	CF-198142-25A	9/125	125.5	+1,-0
JSFC18-2	CF-198142-126	50/125	126	+1,-0
JSFC18-3	CF-198142-053	200/230	236	+4,-0

Fiber Optic Socket Ordering Information

	Amphenol Part No.	Fiber Size Core/Cladding	A Dia. Ref. (Microns)	Ferrule Hole Tolerance
JSFC17-1	CF-198143-25A	9/125	125.5	+1,-0
JSFC17-2	CF-198143-126	50/125	126	+1,-0
JSFC17-3	CF-198143-053	200/230	236	+4,-0

CF-198142-XXX
JSFC18-X

Size 16 Pin Terminus

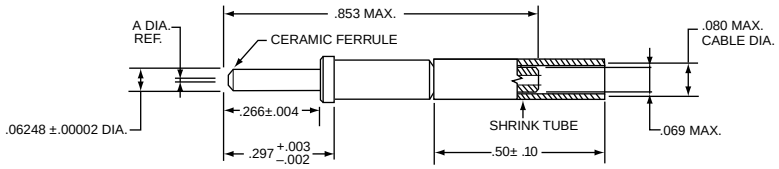

CF-198143-XXX
JSFC17-X

Size 16 Socket Terminus

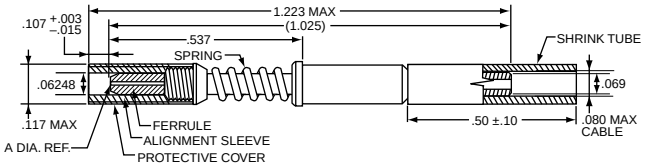

- Approved for use in JSF/F35 applications
- Precision ceramic ferrules which precisely position the fiber within the termini
- Precision ceramic alignment sleeves insure accurate fiber to fiber alignment
- Socket has threaded protective shroud with anti-rotation key, manufactured from rugged PEEK™ material, provides protection for the ceramic alignment sleeve
- Stainless steel termini bodies and springs

MECHANICAL/ENVIRONMENTAL

PARAMETER	PERFORMANCE
CABLE PULL OUT FORCE	22 lbs for 1 minute
MATING DURABILITY	500 cycles
SHOCK – HIGH IMPACT	MIL-S-901 Grade A, Type B, Class I
SHOCK – HALF SINE PULSE	300 g, 3 ms duration
VIBRATION - SINE	60 g, 36 cycles
VIBRATION - RANDOM	49.5 g rms
VIBRATION – RANDOM AT TEMPERATURE	41.7 g rms @125 deg C
SALT SPRAY	48 hours direct exposure @ 35 deg C
THERMAL SHOCK	-55 deg C to +165 deg C, 5 cycles
TEMPERATURE LIFE	165 deg C for 1000 hours

MATERIALS LIST

COMPONENT	MATERIAL
Ferrule	Zirconia
Alignment sleeve	Zirconia
Termini body	Stainless Steel – AMS 5514
Spring	Stainless Steel – AMS 5678
Alignment sleeve shroud	PEEK™
Heat shrink	Kynar, MIL-I-23053/8

JSFC 15
Fiber Optic Receptacle

JSFC 16
Fiber Optic Plug

- Approved for use in JSF/F35 applications
- Based on Amphenol® Composite Tri-Start, Qualified to MIL-DTL-38999, Rev. J.
- Increased Corrosion Resistance-nickel plating (200°C) both with stand 2000 hours of salt spray exposure.
- Durability-1500 couplings minimum (in reference to connector couplings, not termini)
- Termini Protection-recessed pins in this 100% scoop-proof connector minimize potential termini damage
- Vibration/Shock-operates under severe high temperature vibration
- Threaded coupling quickly and completely mates in one 360° turn of the coupling nut

MECHANICAL/ENVIRONMENTAL

PARAMETER	PERFORMANCE
Maintenance Aging	MIL-STD-1344 Method 2002
Mating Durability	500 mating cycles
Insert Retention	100 PSI/25 lbs minimum
Sine Vibration	60 G (140-2000 Hz), 4 hours each at ambient, -55 deg C, and +175 deg C
Standard Shock	300 G half-sine, 3 ms duration
High Impact Shock	MIL-S-901 grade A with lightweight fixture
Temperature Life	1000 hours @ high temp rating
Thermal Shock	-55° C to +165° C - 5 cycles

Easy Steps to build a part number... JSFC15 & JSFC16

1. Program Part Number	2. Shell Styles	3. Service Class	4. Shell Size – Insert arrangement	5. Contact Type	6. Alternate Positions
JSFC15	20	M	E – 8	A	N
JSFC16	26	M	E – 8	B	N

Step 1. Select a Connector Type

	Designates
JSFC15	Receptacle circular fiber optic
JSFC16	Plug circular fiber optic

Step 2. Select a Shell Style

	Designates
20	JSFC15 Wall Mount Receptacle
26	JSFC16 Straight Plug

Step 3. Select a Service Class

	Designates
M	Composite, electroless nickel plate

Step 4. Select a Shell Size – Insert Arrangement

Shell Sizes are MIL-DTL-38999, Series III, plus newer High Density insert Arrangements

Shell Size	Insert Arrangement
B – (11)	2
C – (13)	4
D – (15)	5
E – (17)	8

Shell Size	Insert Arrangement
F – (19)	11
G – (21)	16
H – (23)	21
J – (25)	29
J – (25)	37

Step 5. Select a Contact Type

	Designates
A	Pin contacts
B	Socket contacts

Step 6. Select an Alternate Position

A, B, C, D, E, N for normal

Amphenol Aerospace

JSFC15
Wall Mount Receptacle with Fiber Optics
Shell Style 20

For complete part number see how to order, page 354

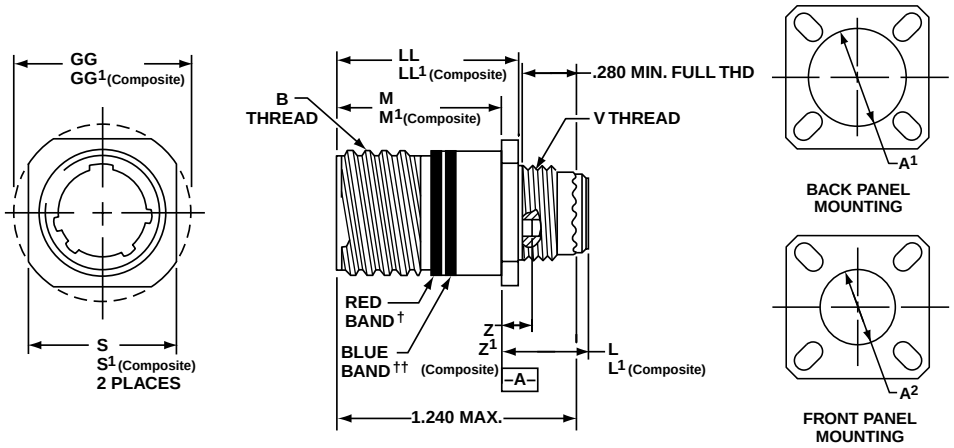

† Red Band indicates fully mated
†† Blue band indicates rear release contact retention system

Designates true position dimensioning

All dimensions for reference only

Shell Size	MS Shell Size Code	B Thread Class 2A 0.1P-0.3L-TS (Plated)	L Max. (TV)	L1 Max. (CTV)	M +.000 –.005 (TV)	M1 +.000 –.005 (CTV)	R1	R2	S Max.	T +.008	V Thread Metric	Z Max. (TV)	Z1 Max. (CTV)	A1 Dia. Back Panel Mount	A2 Dia. Front Panel Mount	AA Max. Panel Thickness	LL +.006 –.000 (TV)	LL1 ±.005 (CTV)	TT ±.008
9	A	.6250	.469	.514	.820	.773	.719	.594	.948	.128	M12X1-6g	.153	.198	.650	.510	.234	.905	.908	.216
11	B	.7500	.469	.514	.820	.773	.812	.719	1.043	.128	M15X1-6g	.153	.198	.800	.620	.234	.905	.908	.194
13	C	.8750	.469	.514	.820	.773	.906	.812	1.137	.128	M18X1-6g	.153	.198	.910	.740	.234	.905	.908	.194
15	D	1.0000	.469	.514	.820	.773	.969	.906	1.232	.128	M22X1-6g	.153	.198	1.040	.900	.234	.905	.908	.173
17	E	1.1875	.469	.514	.820	.773	1.062	.969	1.323	.128	M25X1-6g	.153	.198	1.210	1.010	.234	.905	.908	.194
19	F	1.2500	.469	.514	.820	.773	1.156	1.062	1.449	.128	M28X1-6g	.153	.198	1.280	1.130	.234	.905	.908	.194
21	G	1.3750	.500	.545	.790	.741	1.250	1.156	1.575	.128	M31X1-6g	.183	.228	1.410	1.250	.204	.905	.904	.194
23	H	1.5000	.500	.545	.790	.741	1.375	1.250	1.701	.154	M34X1-6g	.183	.228	1.530	1.360	.204	.905	.904	.242
25	J	1.6250	.500	.545	.790	.741	1.500	1.375	1.823	.154	M37X1-6g	.183	.228	1.660	1.470	.204	.905	.904	.242

JSFC16
Straight Plug with Fiber Optics
Shell Style 26

For complete part number see how to order, page 354

COMPOSITE

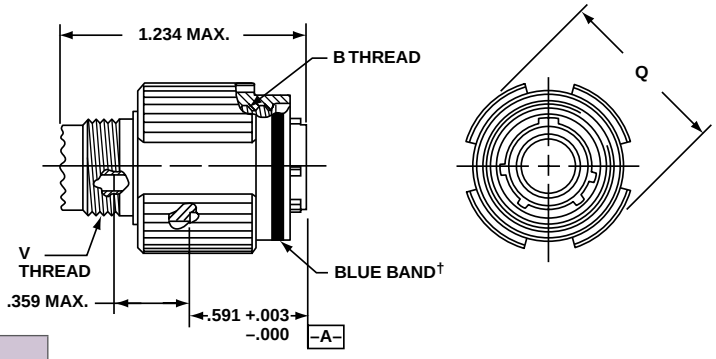

† Blue band indicates rear release contact retention system
All dimensions for reference only

Shell Size	MS Shell Size Code	B Thread 0.1P-0.3L-TS-2B (Plated)	Q Dia. Max.	V Thread Metric
9	A	.6250	.858	M12X1-6g
11	B	.7500	.984	M15X1-6g
13	C	.8750	1.157	M18X1-6g
15	D	1.0000	1.280	M22X1-6g
17	E	1.1875	1.406	M25X1-6g
19	F	1.2500	1.516	M28X1-6g
21	G	1.3750	1.642	M31X1-6g
23	H	1.5000	1.768	M34X1-6g
25	J	1.6250	1.890	M37X1-6g

ARINC 801 Termini
Designed for use in ARINC 801 Fiber Optic Connectors

HOW TO ORDER

Ordering Information
ARINC 801 Termini for ARINC 801 Connectors

Amphenol ARINC 801 Termini Part Number	A Dia. Ref	Ferrule Hole Tolerance
CF-198148-125	125	+1, -0
CF-198148-129	125.5	+1, -0
CF-198148-126	126	+1, -0
CF-198148-128	128	+2, -0
CF-198148-144	144	+4, -0
CF-198148-157	157	+7, -0
CF-198148-175	175	+7, -0
CF-198148-236	236	+7, -0
CF-198148-336	336	+7, -0
CF-198148-448	448	+7, -0

Amphenol® ARINC 801 Termini Features:

- Designed for use in Amphenol ARINC 801 fiber optic connectors - manufactured to comply with ARINC 801.
- Genderless terminus allows for use on both sides of a connector
- Alignment sleeves are contained in a separate carrier which is removable for easier end-face cleaning
- Precision ceramic ferrules and sleeves ensure accurate fiber to fiber alignment
- Keyed to provide anti-rotation
- Available with both PC and APC end-face finishes
- Terminus body is crimped to the cable providing a "Pull-Proof" advantage

Amphenol ARINC fiber optic connectors are supplied less contacts. Order ARINC 801 termini by Amphenol part number designation as shown in the chart at right. Consult Amphenol, Sidney, NY for further availability.

See page 357 for information on ARINC 801 termini in circular 38999 connectors.

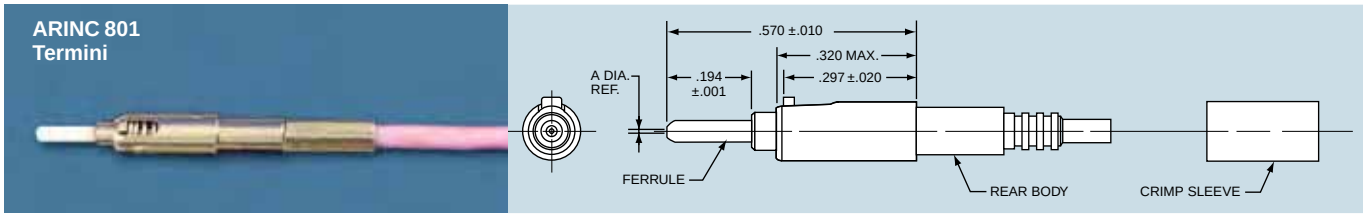

All dimensions for reference only.

ARINC 801 Inserts within Tri-Start Connectors

HOW TO ORDER

ARINC 801 Connectors

ARINC 801 Shell Style	Amphenol Part Number			
	Material/Finish			
	Aluminum/Black Anodize	Composite/ Unplated	Aluminum/OD Cadmium	Stainless Steel/ Unplated
Straight Plug	CF-97017X-YYS	CF-97065X-YYS	CF-97023X-YYS	CF-97061X-YYS
Wall Mount Receptacle	CF-97016X-YYP	CF-97066X-YYP	CF-97022X-YYP	CF-97063X-YYP
Jam Nut Receptacle	CF-97030x-YYP	CF-97064X-YYP	CF-97031X-YYP	CF-97060X-YYP

Amphenol® ARINC 801 Connector:

Amphenol now offers a multi-channel circular connector that complies with the ARINC specification. This connector, available in straight plug and wall mount receptacle, uses the ARINC 801 ceramic termini described on page 356.

The features of the ARINC 801 connector include:

- Uses precision ARINC 801 fiber optic termini (typical multi-mode insertion loss is less than 0.15 dB).
- Removable alignment sleeve insert for easy cleaning of fiber optic termini.
- Three stages of alignment: shell-to-shell keys, guide pins and ceramic alignment sleeves.
- Includes all of the features of standard D38999 straight plug and wall mount receptacle shells (refer to page 350 for shell dimensions).
  - Scoop-proof design
  - Option for alternate keys and keyways
  - Rear accessory threads
  - Standard insertion/extraction tools (M81969/14-03)

Shell Size	Insert Arrangements							
	11	13	15	17	19	21	23	25
'X' in part number	2	3	4	5	6	7	8	9
'YY' in part number	02	04	06	08	12	16	24	32

Front face of pin inserts illustrated

Insert Arrangement **11-02**

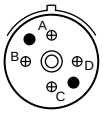

13-04

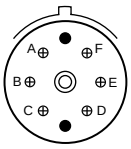

15-06

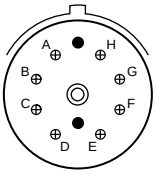

17-08

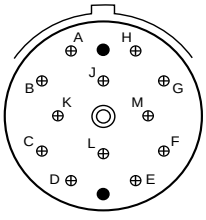

Insert Arrangement **19-12**

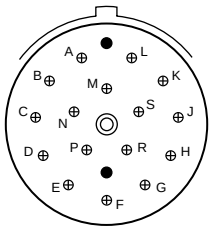

21-16

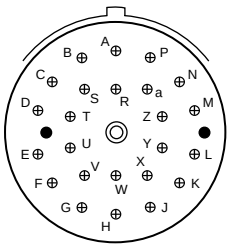

23-24

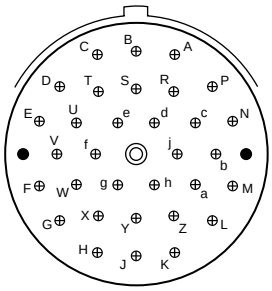

25-32

MT Ferrule Termini

Male and Female Ferrules, for Higher Density

MT Ferrule Fiber Optic Termini
Designed for use in
MT38999 Connectors

HOW TO ORDER

Ordering Information for MT Assembly Kits and Tools

MT Male Assembly Kit (flat ribbon)**	CF-198136-000
MT Female Assembly (flat ribbon)**	CF-198137-000
MT Male Assembly Kit (round cable)**	CF-198160-000
MT Female Assembly Kit (round cable)**	CF-198161-000
MT Kit Assembly Tool	11-100000-000
MT Contact Removal Tool	CF-008025-000

** MT ferrules are not included in the assembly kits

Amphenol® MT (Multi-terminal) Features:

- Designed for use in Amphenol® MT38999 circular connectors and also for rectangular products: printed circuit board interconnects, LRM, VME64 and VITA46 interconnects.
- Male and female ferrules available in either multi-mode or single mode designs.
- Very high density can be achieved in cylindrical connectors:
  - Up to 24 fiber channels in a size 11 composite shell
  - Up to 96 fiber channels in a size 21 composite shell
- Amphenol supplies MT termini assemblies in kits, minus the MT ferrule. MT ferrules that meet the IEC1754-5 specification are recommended for use.
- Assembly tool 11-100000-000 is recommended for MT termini assembly into connectors; MT contact removal tool CF-008025-000 is also available.

Amphenol® MT Termini Assembly Kit (MT female socket clamp shown)

MT Assembly Tool (11-100000-000)

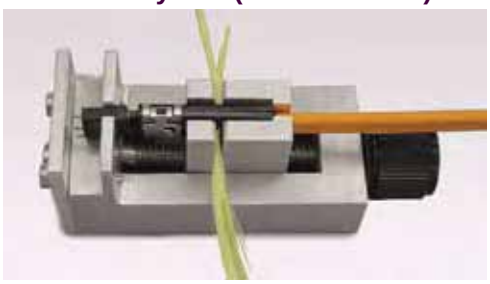

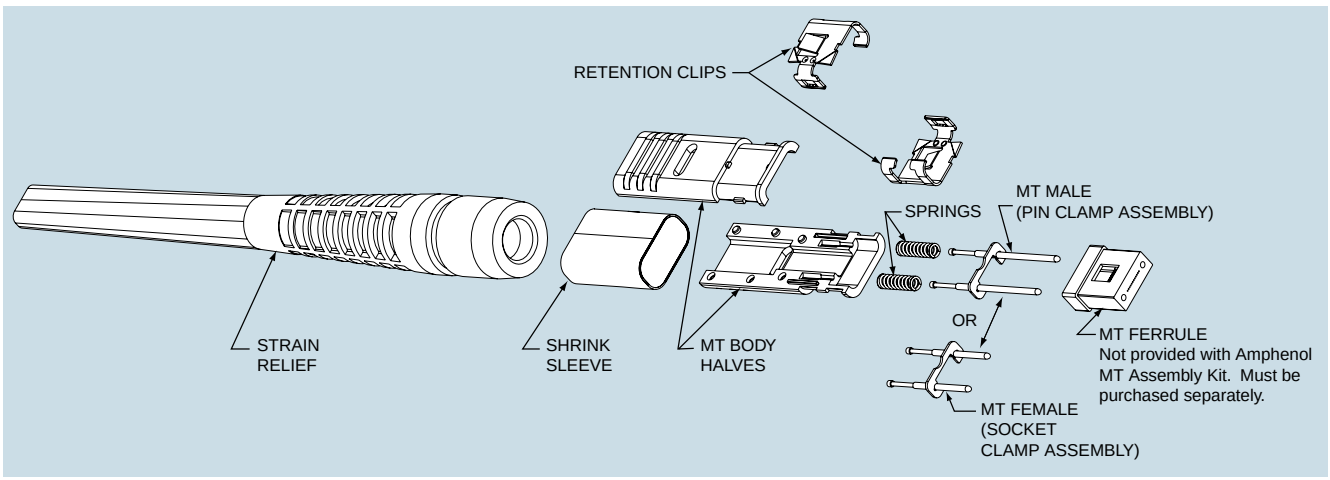

For information on MT fiber optics in Amphenol rectangular interconnects please contact an Amphenol Sales Person or consult Amphenol, Sidney, NY by calling 1-800-678-0141.

Multi-Channel Fiber Optic Circular Connector with MT Ferrules-MT38999, How to Order

Amphenol Aerospace

Amphenol offers a multi-channel circular connector with high density MT fiber optics. This connector uses MT ferrules described on page 358.

The features of the MT cylindrical connector include:

- High fiber density in a relatively small circular connector package with all the advantages of the MIL-DTL-38999 series III connector
- Three levels of alignment provide for precision fiber to fiber interface:
  - Shell to shell with keying to allow for alternate positions
  - Insert plug to insert receptacle
  - MT contact guide pins
- Ferrules are available in either 12-fiber or 24-fiber versions, in multi-mode PC, single mode PC, and single mode APC configurations
- 2 arrangements are available as shown at right, shell size 11 with one ferrule, and shell size 21 with four ferrules

MT38999 Connectors

MT INSERT AVAILABILITY
Front face of pin inserts illustrated

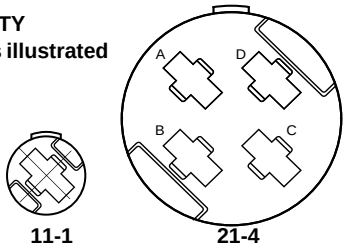

Insert Arrangement	11-1	21-4

Amphenol® MT38999 connectors for use with MT ferrule termini can be ordered by coded part number. Ordering procedure is illustrated by part number CF-699011-01P as shown below:

Easy Steps to build a part number... CF, Tri-Start Series III with Fiber Optics

1. Connector Type	2. Connector Class	3. Terminus Style	4. Shell Finish	5. Shell Style	6. Shell Size– Insert Arrangement	7. Insert Type & Key/ Keyway Position
CF–	6	9	9	0	11- 01	P

Step 1. Select a Connector Type

CF–	Designates Multi-Channel Fiber Optic Connector

Step 2. Select a Connector Class

	Designates
5	Aluminum shell, tight tolerance
6	Composite shell, tight tolerance
8	Stainless Steel shell, tight tolerance

Step 3. Terminus Style

	Designates
9	MT terminus - Flat ribbon cable
R	MT terminus - Round cable

Step 4. Select a Shell Finish

	Designates
4	electroless nickel plated aluminum, 48 hour salt spray resistance, 200°C
5	unplated composite
6	Corrosion resistant stainless steel, 500 hour salt spray resistance, 200°C
9	Corrosion resistant olive drab cadmium plate aluminum, 500 hour salt spray resistance, 175°C
D	Durmalon™ (Nickel-PTFE)

Step 5. Select a Shell Style

	Designates
0	Wall mount receptacle
1	Line receptacle
2	Box mount receptacle
6	Straight plug
7	Jam nut receptacle

Step 6. Select a Shell Size- Insert Arrangement

Shell Size – Insert Arrg.	Designates
11-01	Shell size 11 – Single cavity
21-04	Shell size 21 – Four Cavity

Step 7. Insert Type & Key/Keyway Position

Insert Type and Keyway Position
P designates plin insert
S designates socket insert
For keyway positioning, choose the alternate rotation suffix from the chart below.

ALTERNATE POSITION SUFFIX

Alternate Position	Suffix Letter	
	Pins	Sockets
Normal	P	S
A	G	H
B	I	J
C	K	L
D	M	N
E	R	T

Information on MT termini is provided on page 358.

Durmalon is a trademark of Amphenol Aerospace. For more information on Durmalon, go to www.amphenol-aerospace.com/durmalon.asp

Fiber Optic Bulkhead Feed-Through
With Size 16 Pin Termini on Both Ends

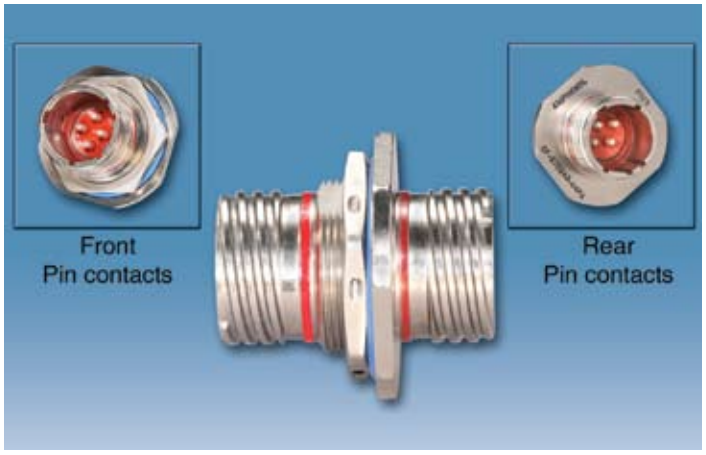

Fiber Optic Bulkhead Feed-Through Connector (Special size 16 Pin-Pin Termini Configuration)

Amphenol extends it's line of harsh environment fiber optic components with a multi-channel fiber optic feed-through. This feed-through is designed to perform in demanding aerospace environments and any other applications where a high degree of environmental sealing is required between bulkheads.

Fiber Optic Bulkhead Feed-Through Features include:

- Fully compatible with D38999 and Amphenol® CF-series fiber optic connectors
- Jam nut style for easy installation
- Available with M29504 fiber optic termini
- Meets or exceeds hermeticity of 10^-7 cc/min. He leak testing
- Available finishes include electroless nickel and olive drab cadmium
- Typical fiber sizes include 50/125 and 62.5/125 multi-mode fiber.

HOW TO ORDER

Fiber Optic Bulkhead Feed-through Connectors

Bulkhead Feed-through Shell Style	Amphenol Part Number	
	Finish	
	Electroless Nickel	OD Cadmium
Jam Nut Receptacle	CF-97024X-YYPA	CF-97019X-YYPA

Shell Size	Insert Arrangements							
	11	13	15	17	19	21	23	25
'X' in part number	2	3	4	5	6	7	8	9
'YY' in part number	02	04	05	08	11	16	21	29

PA suffix - indicates pin with Normal rotation on jam nut end and 'A' rotation (mirror image) on opposite end.

Fiber Optic Bulkhead Feed-Through Connector

Jam Nut Receptacle CF-97024x/CF-97019X

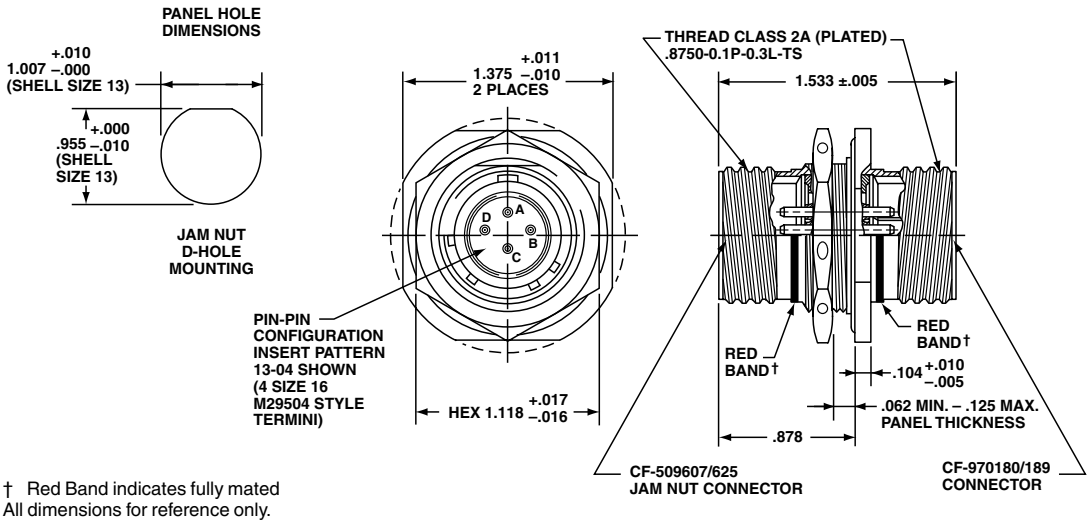

† Red Band indicates fully mated
All dimensions for reference only.

HOW TO ORDER

Protection Caps

Shell Size	Plastic Protection Caps		MS Metal Protection Caps		
	For Plugs	For Receptacles	MS Shell Size Code	For MS Plugs	For MS Receptacles
9	10-70506-14	10-70500-10	A	D38999/32W9X*	D38999/33W9X*
11	10-70506-16	10-70500-12	B	D38999/32W11X*	D38999/33W11X*
13	10-70500-18	10-70500-14	C	D38999/32W13X*	D38999/33W13X*
15	10-70500-20	10-70500-16	D	D38999/32W15X*	D38999/33W15X*
17	10-70500-22	10-70500-19	E	D38999/32W17X*	D38999/33W17X*
19	10-70500-24	10-70500-20	F	D3899/32W19X*	D38999/33W19X*
21	10-70524-1	10-70500-22	G	D3999/32W21X*	D38999/33W21X*
23	10-70506-28	10-70500-24	H	D38999/32W23X*	D38999/33W23X*
25	10-70500-28	10-70524-1	J	D3899932W25X*	D38999/33W25X*

Sealing Plugs

Sealing Plugs for Unused Contact Cavities		
Contact Size	Commercial No.	Military No.
8 (Coax)	10-482099-8	N/A
8 (Twinax)	T3-4008-59P	N/A
8 (Power)	10-405996-81	MS27488-8-1
10 (Power)	10-576225	N/A
12	10-405996-121	MS27488-12-1
16	10-405996-161	MS27488-16-1
20	10-405996-201	MS27488-20-1
22D	10-405996-41	MS27488-4-1

* To complete order number, replace X with applicable letter as follows:
R - designates eyelet type
N - designates washer type

MS metal protection caps are supplied with service class W which designates corrosion resistant olive drab cadmium plate aluminum.

Protection Caps

Sealing Plugs

Amphenol offers the widest range of accessories for circular connectors conforming to most Military (MIL) specifications.

Please visit www.backshellworld.com for more information about backshells and a configurator to build a part number... see Backshell Designer.

Backshells

Some Backshells can be used without any additional protection while other types are generally used with heat shrink boots or similar protection/strain relief mechanism depending on specific requirements.

Backshells for Military & Aerospace applications are governed by SAE, AS85049 standard and Amphenol Backshells are designed to meet the requirement of this standard. Amphenol offers additional styles and designs and can support you from concept to product realization to satisfy your unique specifications. Please contact your Sales Associate or Technical Assistance for more information.

- **Non-Environmental Backshell**
- **Environmental Backshell**
- **Non-Environmental EMI/RFI Backshell**
- **Environmental EMI/RFI Backshell**
- **Shrink Boot Adaptor**
- **Crimp Ring Adaptor**
- **Band Lock Adaptor**
- **SQ Adaptor**
- **Quick Clamp**
- **Strain Relief Clamp**
- **Grommet Nut**
- **Lamp Thread Adaptor**

Application Tools for Multi–mode Termini

For Use in Multi-Channel Circular Connectors

The following data includes information pertaining to the application tools which have been established for polishing, inserting and removing multi-mode fiber optic termini within multi-channel connectors. Insertion and removal tools are common to MIL-DTL-38999 size 16 and size 20 tools. Installation instructions L-1262 for multi-mode size 16 and L-2103 for multi-mode size 20 provide proper installation and polishing procedures for these termini. These are available on-line at www.amphenol-aerospace.com, under service instructions. Termination kits, as shown at right, are available for each Amphenol –connector family. The kit includes the carrying case, heat gun, crimping and stripping tools and microscope with adapters.

Plastic Insertion/Removal Tool for Size 16 Multi-mode Termini

Termination Kit

HOW TO ORDER

Application Tools for Multi-Channel, Multi-mode Fiber Optic Termini

Contact Size/ Type	Termini Part Number	Hand Polishing Tools*	Machine Polishing Tools		Termination Kit (Includes necessary field termination equipment)
			Amphenol/Buehler Fibrmet*** Polishing Tool Part Number	Amphenol/Buehler Fibrscope*** Adaptor Body Part Number	
16 Multi-mode	CF-198035-( )** Socket CF-198036-( )** Pin	11-12123 or 11-12195 (grooved for wet polishing)	11-12103	11-12104	CF-8500-1†
20 Multi-mode	CF-198080-( )** Socket CF-198081-( )** Pin	11-12153	N/A	N/A	CF-8500-3††

Insertion Tools

Contact Size/ Type	Plastic Tools (Double ended insertion/removal tool)		Metal Tools			
	MS Part Number	Color	Angle Type		Straight Type Commercial Part Number	Color
			MS Part Number	Commercial Part Number		
16 Multi-mode	M81969/14-03	Blue/White	M81969/8-07	11-8674-16 11-012197-16†††	11-8794-16 11-012198-16†††	Blue
20 Multi-mode	M81969/14-10	Red/Orange	M81969/8-05	11-8674-20	11-8794-16	Red

Removal Tools

Contact Size/ Type	Plastic Tools (Double ended insertion/ removal tool)		Metal Tools				
	MS Part Number	Color	For Unwired Contacts Commercial Part Number	Angle Type		Straight Type Commercial Part Number	Color
				MS Part Number	Commercial Part Number		
16 Multi-mode	M81969/14-03	Blue/White	11-10050-10	M81969/8-08	11-8675-16	11-8795-16	White
20 Multi-mode	M81969/14-10	Red/Orange	11-10050-9	M81969/8-06	11-8675-20	11-8795-20	White

✦ FOR APPLICATION TOOLS FOR SINGLE MODE TERMINI, CONSULT AMPHENOL AEROSPACE.

The M81969/8, 11-8675 and 11-8794 metal contact insertion and removal tools will accommodate wires having the maximum outside diameter of .105 for size 16 and .084 for size 20. When wire diameters exceed this, the plastic tools must be used.

* Single Termini Capability

** To complete order number add fiber size; see ordering information on page 3 for size 16 multi-mode, and page 4 for size 20 multi-mode.

*** Fibrmet and Fibrscope are registered trademarks of Buehler Ltd.

† This includes hand polishing tool 11-12123.

†† This includes hand polishing tool 11-12153.

††† Recommended tool for socket termination insertion.

Amphenol Aerospace

Fiber Optic Custom Cable Assembly Design and Fabrication

Amphenol's cable assembly expertise dates back to the first industry standard fiber optic connector, over 25 years ago. Our depth of understanding of connector and termini design, and the complete control of connector materials, make Amphenol Fiber Optic cable assemblies one of the best in the industry. Amphenol offers a comprehensive line of single mode and multi-mode cable assemblies in a variety of cable configurations. From simplex jumpers to multi-fiber custom assemblies, Amphenol can design and supply all of your cable needs.

High quality polishing processes have been developed to meet and exceed industry standard specifications for insertion loss, return loss and end-face geometry. All assemblies are designed to intermateability standards for optical and physical performance criteria.

Amphenol can assemble, polish and test many harsh environment and commercial grade connectors including:

- MIL-PRF-29504/4, /5, /14, /15
- HD20
- MTC/MP0
- ARINC 801
- ST
- LC
- FC
- SC

Connector and cable materials are extensively inspected prior to assembly. Every completed cable assembly receives 100% inspection for both insertion loss and visual defects. Interferometers are used for accurate end-face geometry testing.

You specify the optical and mechanical requirements of the cable assembly and Amphenol's fiber optic application's engineers will develop an "end-to-end" interconnect solution. Design creativity, experience and an understanding of harsh environments will ensure a functional and manufacturable design. See the next page for a guide to selecting and specifying a fiber optic cable assembly.

D38999 Fiber Optic Connectors and Cables

ARINC 801 Connectors and Cables

Explosion Proof Amphe-EX™ Connectors and Cables

The following criteria should be considered when specifying a fiber optic cable assembly. You may copy this page and fax it Amphenol Aerospace*. Our design engineers are ready to help meet your custom cable application requirements.

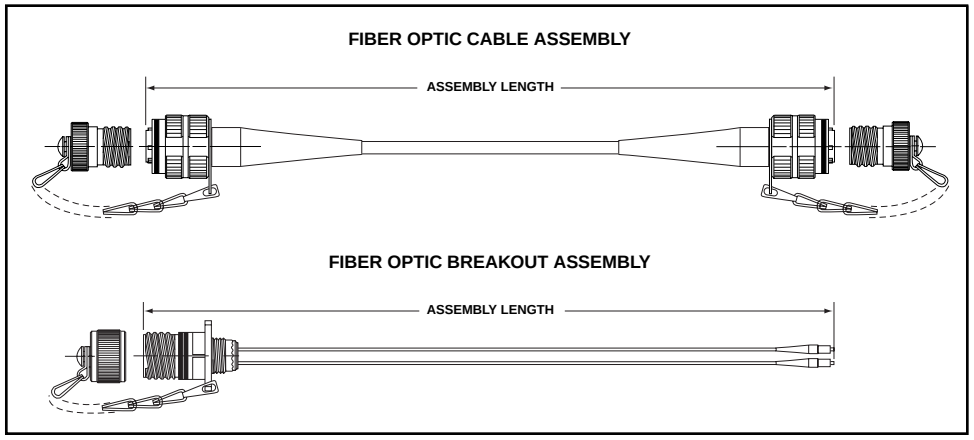

Typical Breakout Cable Assembly shown:

- Connector ends: CF38999 Fiber Optic Jam Nut Receptacle; and Commercial grade ST
- Termini in the CF38999 connector are size 16 single mode
- Optical wavelength: 1300
- Cable: Avionics grade; 1 ft. length

This check list is provided to help ensure a thorough design of a custom fiber optic cable assembly.

ENVIRONMENTAL CRITERIA

- High Temperature _____
- Low Temperature _____
- Salt Spray _____
- Mechanical Shock _____
- Mechanical Vibration _____
- Durability _____

* Fax to 607-563-5157, attention Fiber Optic Design Engineering, Amphenol Aerospace. Or call 607-563-5011 for further assistance.

COMPONENTS

Termini

- MIL-PRF-29504
  - Pin _____
  - Socket _____
- ARINC 801
- MTC
- HD20
- Other

Connectors - Cylindrical

- CF38999
- ARINC 801
- MT38999

Connectors - Rectangular

- Low mating force, PCB _____
- LRM
- Rack and Panel
- VME64X
- VITA-46

Accessories

- Backshells/Strain Reliefs _____
- Sealing plugs _____
- Protection caps _____

OPERATIONAL CRITERIA

- Assembly Length and Tolerance _____ _____

Optical Wavelength

- 850
- 1300
- 1550
- Other

Fiber Core Size

- 5/125 single mode
- 9/125 single mode
- 50/125 multi-mode
- 62.5/125 multi-mode
- 100/140 multi-mode
- 200/230 multi-mode
- Other

Performance

- Insertion Loss
- Return Loss

Cable Type

- Field Tactical
- LSZH
- Breakout
- Distribution
- Avionics

Special Options

- EMI Shielding
- Hermetic Backfill

Amphenol
High Frequency Contacts

CONCENTRIC TWINAX

COAXIAL

TWINAX PC TAIL

TRIAX

DIFFERENTIAL TWINAX

QUADRAX

TABLE OF CONTENTS

- Table of Contents 365
- Overview of Amphenol's High Frequency Contacts 366-370
- Cable Systems 371
- Cable Usage Guide 372-375

MIL-DTL-38999 Circular Connector Overview 376

Contacts for MIL-DTL-38999 Connectors:

- Quadrax Contacts 377-379
- Differential Twinax Contacts 380, 381
  Compliant Quadrax and PC Tail Quadrax Contacts 382
- Quadrax Transition & Differential Twinax Transitional Adapters . . . 383-386
- Insert Arrangements for MIL-DTL-38999 Series III Incorporating Quadrax and Differential Twinax Contacts 387, 388
- How to Order 38999 Series III with Quadrax 100 ohm Contacts 389
- Coaxial Contacts 390-393
- Matched Impedance Coaxial Contacts 394
- Typical Contact Installation Instructions for Coax Contacts 395
- High Frequency Contacts (DC to 40 GHz) 396
- Twinax Contacts 397-399
- Triax Contacts 400
- Coax, Twinax & Triax PC Tail Contacts 401-403
- Insert Patterns for MIL-DTL-38999 Series III Incorporating Coax, Twinax and Triax Contacts 404-406

Standard MIL-DTL-5015 & Heavy Duty MIL-DTL-22992 Circular Connector Overview 407

Contacts for Standard MIL-DTL-5015 & Heavy Duty MIL-DTL-22992 Connectors:

- Coaxial Contacts 408, 409
- Insert Patterns for Standard MIL-DTL-5015 and Heavy Duty MIL-DTL-22992 Incorporating Coax Contacts 410
- Rectangular Rack & Panel Connectors that incorporate High Speed . 411, 412
- Additional Contact Styles from Amphenol 413
- Guide for Selecting High Frequency Contacts and Cables 414

High Frequency Contacts Typical Markets:

- Military & Commercial Aviation
- Military Vehicles
- Missiles & Ordnance
- C4ISR

Amphenol Aerospace

Amphenol® High Frequency Contacts Provide High Speed Transmission and Operate in High Frequency Conditions

When you need superior electrical performance plus shielding to eliminate interference from outside electrical sources in a connector, Amphenol has the most reliable contact solutions.

Amphenol offers a very wide range of contacts that provide high speed transmission and operate in high frequency conditions. You can be assured of interconnection compatibility when you come to Amphenol for your contact needs as well as your connector needs. Amphenol's expertise in interconnection solutions assures that your contacts will mate properly and will perform to the application specifications of your particular requirements.

MIL-DTL-38999 CONNECTORS - The high performance series most ideal for integrating high speed and high frequency contacts. MIL-DTL-38999, Series I, II and III are by far the choice of connector for today's avionics needs - these subminiature family connectors are ideally suited for the incorporation of shielded contacts.

This catalog section is primarily devoted to the high speed and high frequency contact options for use in MIL-DTL-38999 Connectors, which include:

Coaxial	Concentric Twinax	Triax	Quadrax	Differential Twinax	High Frequency	Transition Adapters
Pin and socket contacts designed for RF/microwave and shielded wire applications. Sizes 4, 8, 12 & 16	Pin and socket contacts designed for protection from magnetic and electro-static interference including nuclear electromagnetic pulse. Sizes 8 & 12	Pin and socket contacts designed for shielded wire applications with 3 conductors. Sizes 8, 10 & 12	Size 8 pin and socket contacts. An outer contact with 4 strategically spaced inner contacts forming two 100 or 150 Ohm matched impedance differential pairs.	Size 8 pin and socket contacts. An outer contact with 2 inner contacts spaced to form one 100 or 150 Ohm matched impedance differential pair.	Size 8 Coaxial contacts that provide high frequencies (DC to 40 GHz). Unique "Float Mount" technology maintains tight mechanical tolerances.	Matched impedance quadrax and twinax transition adapters provide a method of launching from the high speed connectors to PCB boards.

Other series of connectors from Amphenol Aerospace, in addition to 38999 connectors, can incorporate shielded contacts. These include the following (and are also covered in this catalog section):

- Amphenol® Heavy Duty Circular Connectors, MIL-DTL-22992 - with coax contacts.
- Amphenol® Printed Circuit Board Connectors - Rectangular connectors with standard low mating force brush contacts can have hybrid arrangements with coax contacts.
- LRM Interconnects - Rectangular module and backplane connectors with standard low mating force brush contacts can have hybrid arrangements with coax contacts.
- Amphenol® ARINC 600 and R27 Rack & Panel Connectors are available with quadrax, coax, twinax and differential twinax contacts.

See High Frequency Contact Designer's Guide at end of this catalog.

The Cable Usage Guide is a key reference to help guide you in selecting the contacts best suited to your needs. Since most shielded wire applications start with a fixed requirement for cable types, the guide refers you to the Amphenol connector family utilizing contacts which are compatible with the cable characteristics.

For more information on other Amphenol connectors with shielded contacts:

- Amphenol® Circular Connectors, MIL-DTL-26482, Series 1 are available with coaxial contacts, size 8 and 12 for crimp and solder type. See catalog 12-070 on-line at www.amphenol-industrial.com, or consult Amphenol Industrial Operations.
- Amphenol® MS/Standard, MIL-DTL-5015 Circular Connectors are available with size 4, 8 and 12 coax contacts. Consult Amphenol Industrial Operations for more information or on-line at www.amphenol-industrial.com.

For more information on connectors with fiber optics see the Fiber Optic section of this catalog or consult Amphenol Aerospace, Sidney, NY.

Amphenol provides the latest technology in high speed contacts - differential twinax and quadrax contacts, size 8, for use in MIL-DTL-38999 Special* Circular Connectors.

DIFFERENTIAL TWINAX CONTACTS

High speed Differential Twinax contacts consist of an outer contact with two inner contacts spaced to form one 100 or 150 Ohm controlled impedance differential pair. See pages 380 and 381 for performance data and ordering of Differential Twinax contacts, and consult Amphenol Aerospace for more information.

Differential Twinax Contact

QUADRAX CONTACTS

- High speed Quadrax contacts consist of an outer contact with four inner contacts spaced to form two 100 or 150 Ohm controlled impedance differential pair.
- Both contacts, when used in Amphenol MIL-DTL-38999 Series III and ARINC type connectors, provide an excellent alternative for harsh environment applications such as:
- Ethernet 100 Base-T-100 Ohm
- Gigabit Ethernet 1000 Base-T-100 Ohm
- Fibre Channel-150 Ohm
- IEEE1394B FireWire-110 Ohm

Quadrax Contact

Differential Twinax and Quadrax contact options include:

- Crimp or printed circuit board termination
- Established designs to accommodate a variety of cable types and gages
- Ground plane connectors can incorporate quadrax contacts. These connections have conductive inserts that ground the outer conductor of the contact body to the shell of the connector. They accommodate size 8 and 12 shielded contacts of which the size 8 can be quadrax type.

See pages 377-379 for performance data of Quadrax contacts. Consult Amphenol Aerospace for further information needed.

Differential Twinax and Quadrax contacts provide high data transfer rates, low power consumption, and excellent EMI capability. They offer controlled impedance of 100 or 150 Ohm and are ideal for use in harsh environments.

D38999 Series III Ground Plane Connectors with Quadrax PCB Socket contacts

D38999 Series III with Quadrax and Power Contacts

D38999 Series III Connectors (standoff shell at right and standard shell below) with Quadrax PC Tail Contacts

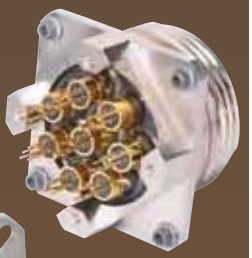

* Requires modified connector to accommodate keyed contacts.

QUADRAX CONTACTS FOR ARINC CONNECTORS

Amphenol ARINC 600 Rack and Panel connectors can incorporate high speed quadrax contacts as well as coax, twinax and differential twinax contacts. R27 Rack and Panel connectors use the same contacts as ARINC 600 connectors. For more information about rack and panel connectors contact Amphenol Aerospace, Sidney, NY.

Quadrax Contact for ARINC Connectors

BOARD LEVEL CONNECTORS WITH COMPLIANT QUADRAX CONTACTS

Amphenol also provides compliant quadrax socket contacts and Quadrax pin contacts with PC tails for attaching to printed circuit boards. See page 382 for more information.

Compliant Quadrax Socket and PCB Tail Quadrax Pin

FEED-THROUGH CONNECTOR WITH QUADRAX CONTACTS

Amphenol's feed-through connector is double-ended for through bulkhead applications. Consult Amphenol for more information.

Quadrax Terminators

Amphenol offers a terminator assembly which is a low reactance, resistive impedance match to the characteristic impedance of a transmission line. It is used to terminate the far ends of a transmission line or an open tap so that the energy from signals traveling down the transmission line is absorbed within the resistor and not reflected back down the transmission line causing signal interference (noise). Consult Amphenol for more information.

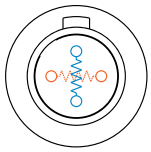

Quadrax Terminator

Transition Adapters

In conjunction with its Differential Twinax and Quadrax contacts, Amphenol has developed a full line of Transition Adapters in order to facilitate launching of controlled impedance signals to printed circuit boards. These use differential twinax or quadrax 90° or straight receptacles and they can be either threaded or cable to board direct. The threaded transition adapters provide an ideal method of disconnecting the differential twinax or quadrax connector from the board.

See pages 383-385 for further description, performance data and ordering of transition adapters.

Board Level Connector with Compliant Quadrax Contacts

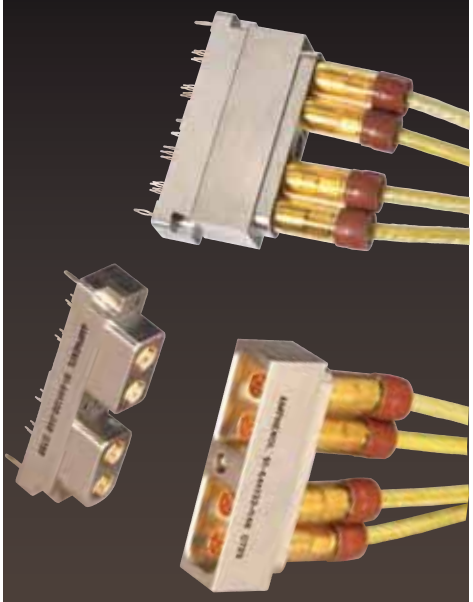

Straight Quadrax Receptacle Contact

90° Quadrax Receptacle and Plug Transition Adapter

90° Differential Twinax Receptacle and Plug Transition Adapter

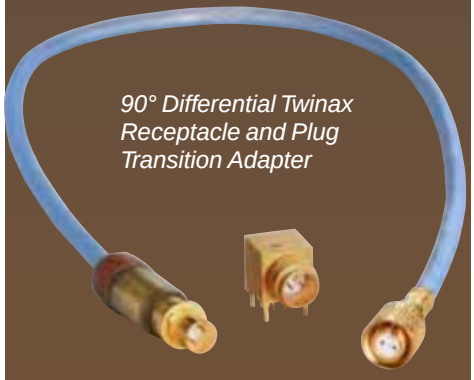

Amphenol Aerospace

Optional choices, other than standard crimp or solder 500 cycle and 1500 cycle contacts, are often required for high frequency interconnections. Amphenol offers shielded contacts for RF applications as well as balanced high sensitivity circuits.

SHIELDED COAXIAL CONTACTS

High speed Coax contacts within a connector provide the shielding protection, and many cases the RF/microwave performance, needed in the circuitry of many applications.

Shielded Coax Contacts

All popular series of Amphenol circular connectors and many rectangular connectors are available with coax contacts. Diameters are standardized in sizes 4, 8, 12 and 16 so that coaxial contacts may be interchanged with power contacts in connector arrangements which include those sizes. Popular RG cable types and a variety of other commercial coaxial cables can be accommodated. See page 390 for coax contact performance data. Matched impedance size 12 coax contacts are also available (see page 394). The use of coax contacts within a connector, compared to the use of individual coaxial/shielded connectors, offers advantages of savings in space and weight and no cross-mating difficulties. Coax and standard contacts may be mixed within the connector to meet special signal needs. The connector itself offers further protection and environmental integrity through the grommets and seals used, and coaxial junction is protected by the connector outer shell.

CONCENTRIC TWINAX SHIELDED CONTACTS

High performance shielding capabilities are available with Concentric Twinax contacts. These are designed for protection from magnetic and electrostatic interference including nuclear electro-magnetic pulse. The contact is crimp terminable to twisted shielded cable and is fully scoop-proof (recessed pins) in MIL-DTL-38999 connectors. The concentric twinax contact is engineered to maintain shield integrity through a multi-pin circular connector and does not require contact polarization within the insert. Size 8 concentric twinax contacts were developed for use in MIL-STD-1553B Airborne multiplex data bus applications. Ideal for this application need is the high performance Tri-Start connector with its fully scoop-proof feature of recessed pins.

Concentric Twinax Contacts Size 8

MIL-DTL-38999 Lanyard "Breakaway" Connector with Concentric Twinax Contacts, Qualified for MIL-STD-1760

The concentric twinax contact is crimp terminable to twisted shielded cable. Size 12 concentric twinax contacts were developed for SAAB. They can be used in any size 12 cavity of D38999 I, II or III or SJT connector.

Size 8 & 12 coax, triax or twinax contacts or size 16 coax contacts are available in Ground Plane Connectors (See photo preceding page). These are MIL-DTL-38999 Series III connectors for data bus, LAN and coax/triax/twinax transmission lines with conductive inserts that ground the outer contact conductor to the shell. They are sold "less contacts"

Amphenol® Shielded Contacts provide design versatility for electrical circuitry. Shielded contacts are used to eliminate interference from outside electrical sources, when standard crimp or solder contacts are not enough.

MIL-DTL-38999 Connector with High Speed Coax Contacts

Size 8 Coax Pin Contact

Concentric Twinax Size 12 Contacts

MIL-DTL-38999 Connector with Concentric Twinax Contacts

HIGH FREQUENCY COAX CONTACTS WITH "FLOAT MOUNT" TECHNOLOGY

High Frequency Size 8 Coax Contacts with "Float Mount" Technology

Amphenol Aerospace now offers DC to 40 GHz size 8 coaxial contacts for the D38999 housing and standard inserts. These contacts can be terminated to a multiple of cable types depending on the application.

By using standard interfaces that are based on MIL-STD-348 and can be installed in any D38999 size 8 insert, Amphenol has transformed the circular connector industry. This technology expands the use of D38999 connectors to include the microwave transmission lines within the multi-port configuration without change to a custom connector.

The high frequencies are maintained by Amphenol's unique "Float Mount" technology. This technology allows for consistent microwave performance while maintaining tight mechanical tolerances. This consistency provides superior electrical performance and, unlike other blindmate connectors, will maintain an accurate phase length when mated. See page 396 for specifications, performances and ordering of this contact.

HF38999 - D38999 Connectors with High Frequency Coax Contacts

Twinax Contacts for Printed Circuit Board Applications

PC TAIL TWINAX CONTACTS

Variety of PC Tail Twinax Contacts

Amphenol provides Printed Circuit Tail Twinax contacts for MIL-DTL-38999 Series I and III circular connectors and also for ARINC 404 and ARINC 600 rectangular connectors. High reliability is assured with factory pre-assembled contacts and standardized termination to the board.

See pages 401-403 for performance data and ordering of PC tail twinax contacts, and consult Amphenol Aerospace for further information needed. Also see the Printed Circuit Board, and the Series I, II, III section for MIL-DTL-38999 connectors.

D38999 Connectors with PC Tail Twinax Contacts

Printed Circuit Twinax Contacts provide a cost effective packaging solution for limited space applications where connectors are attached to printed circuit boards.

TRIAX CONTACTS WITH THREE CONDUCTORS FOR USE WITH TRIAX CABLE

Triax Contacts

Amphenol supplies sizes 8, 10 and 12 triax contacts for use in MIL-DTL-38999 Series I, II and III connectors. Triax contacts provide additional shielding when terminated to triax cable having solid or stranded center conductors. See cable compatibility in the Cable Usage Guide and performance data and ordering of triax contacts on pages 400-403. Each of the three conductors of the triax contact is separated by dielectric insulation to isolate ground planes and to improve shielding effectiveness. All conductors are crimp terminated for high reliability and ease of assembly. Triax contacts may be specified for direct connection to printed circuit boards. For maximum system flexibility, triax contacts may be mixed with coax, twinax and power contacts in a single connector.

Rail Launch MIL-STD-1760 Connector with Triax Contacts

Amphenol Aerospace

CABLE ASSEMBLY CAPABILITIES

Amphenol provides a large array of cable assemblies with high speed quadrax and differential twinax contacts, as well as coax and concentric twinax contacts. This page shows a few examples. The Cable Usage Guide pages that follow list the design possibilities for these high speed contacts.

Amphenol strives to offer customers the widest range of cable assemblies, keeping abreast of the latest cable types in the marketplace. Please consult with the contact product managers at Amphenol Aerospace for assistance in designing the cable assembly that suits your particular needs. From a simple one-cable interconnection, to a multiple cable system, Amphenol can design and supply your cable needs for high frequency contacts and connectors. See the High Frequency Contact Designer's Guide at the end of this catalog

Eight Wire Gigabit Ethernet Assembly

Variety of Quadrax Cable Assemblies

Quadrax Contact with 8P8C "RJ45" Jack Ethernet Assembly

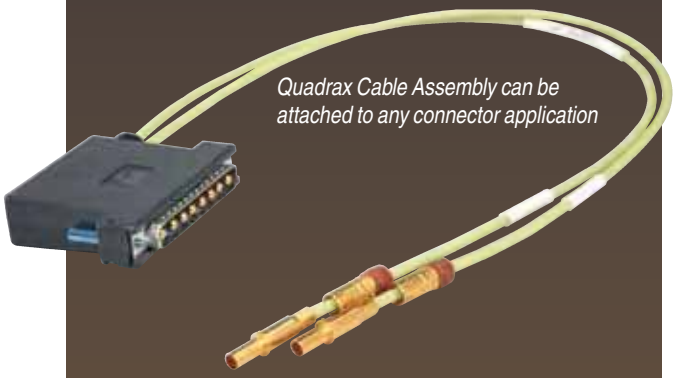

Quadrax Cable Assembly can be attached to any connector application

TESTING OF CABLES

Rigid testing is performed 100% on cable assemblies at Amphenol before they are shipped to make sure they meet customer requirements. These requirements include tests such as DWV, resistance and continuity. Amphenol has the background experience and understanding of harsh environmental testing to assure reliable "end-to-end" interconnect solutions.

Quadrax Cable Assembly attached to Board Level Compliant Quadrax Connector

Use the Cable Usage Guide on pages 372-375 as follows:

1. Locate the cable you are using in Cable Type column. For cables not listed consult Amphenol Aerospace.
2. Refer to the Amphenol Connector section which features contacts/adapters for this cable. Connector size, performance features and insert pattern availability may influence your choice.
3. Order your connector and contacts or transition adapters by following the procedure given in the section for the connector series selected. These instructions are supplemented by the Amphenol Catalog Section covering the basic connector.

Quadrax Contacts CABLE USAGE GUIDE D38999 Series III* Connectors

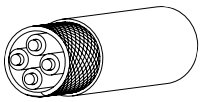

Cable Type		Nominal Impedance (ohms)
Draka Fileca	F-4703-3	100
	F-4703-4	
	F-4704-5	
	F-47-4-6	
Filotex	ET2PC236	
	ET2PF870	
PIC Wire	E50424	
	E50426	
	E51424	
Tensolite	NF22Q100	
	NF24Q100	
	NF24Q100-1	
	NF24Q100-01-200C	
	NF26Q100	
	NF26Q100-1	
	NF26-2Q100	
	24443/03130X-4(LD)	
	24443/03166X-4(LD)	
	24443/9P025X-4(LD)	
	23450/04090X-4 (LD)	
	24443/C20714X-4(LD)	
Gore	RCN7688	
	RCN8513	
	RCN8672	
S280W502-4		
JSF-18-3		
Themax	956-4TN	
	956-5	
	T956-4T200	
	MX100Q-24	
Tensolite	24450/03089X-4(LD)	110
Gore	RCN8487	
JSFY02-1		
JSF18		
Tensolite	26473/02006X-4(LD)	150
Gore	RCN8328	

* Requires modified connector to accommodate keyed contacts.

Differential Twinax Contacts CABLE USAGE GUIDE D38999 Series III* Connectors

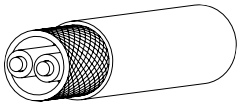

Cable Type		Nominal Impedance (ohms)
Tensolite	26463/70460X-2	98
ST5M1284-003		
Draka Fileca	2709-3	100
PIC Wire	E10224	
Tensolite	NF24T100-200C Space	
	23460/05114X-2(LD)	
	24463/03220T-2(LD)	
	24463/05099X-8(LD)	
	26453/03184X-2(LD)	
	24463/9P025X-2(LD)	
Raychem	0026A0024, 0024G0024	
S280W502-6		
JSFY11-24		
Gore	GSC-05-827300-00	
Thermax	956-6262, 956-1T200	
	12814	
	MX 100-24	
Tensolite	26483/03071X-2(LD)	150

Quadrax Transition Adapters CABLE USAGE GUIDE D38999 Series III* Connectors or ARINC 600 Connectors

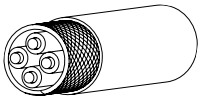

Cable Type		Nominal Impedance (ohms)
Draka Fileca	F-4703-3	100
	F-4704-4	
Tensolite	NF22Q100	
	NF22Q100-01	
	NF24Q100	
	NF26Q100	
Thermax	956-5	
Gore	GSC-10-8273900	
Tensolite	26473/02006X-4(LD)	150

Differential Twinax Transition Adapters CABLE USAGE GUIDE D38999 Series III* Connectors or ARINC 600 Connectors

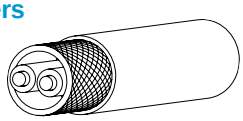

Cable Type		Nominal Impedance (ohms)
M17/176-00002		78
Tensolite	224463/9P025X-2	100
	24463/9P025X-2(LD)	
Tensolite	26483/03071X-2	150

Amphenol Aerospace

Quadrax Contacts
CABLE USAGE GUIDE
ARINC 600 Rack & Panel Connectors

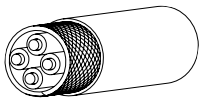

Cable Type		Nominal Impedance (ohms)
Draka Fileca	F-4703-3	100
	F-4704-5, F4704-4	
Tensolite	NF22Q100	
	NF24Q100	
	24443/03130X-4(LD)	
	24443/9P025X-4(LD)	
S280W502-4		
JSFY02-1		110
Gore	RCN8328	150
Tensolite	26473/02006X-4(LD)	

Concentric Twinax Contacts
CABLE USAGE GUIDE
D38999 Series I, II, III & SJT Connectors

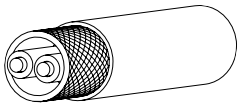

Cable Type		Nominal Impedance (ohms)
EPD32263A		77
EPD22189B		77
M17/176-00002		77
GSC-12-2548-00		77
GC875TM24H		77
GSC-12-81095-00		77
Raychem	10602	77
	10606	77
	10612	77
	10613	77
	10614	77
23089/RC		77
05A0771		77
T10971		77
7724C8664		77
7726D0664		77
782OD0111 (20 AWG)		78
0024G0024		100
5M2022-003		100
HS5930		100
S280W502-1		100
CXN2268		100

Concentric Twinax Contacts
CABLE USAGE GUIDE
ARINC 600 Rack & Panel Connectors

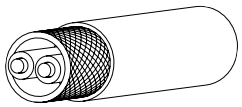

Cable Type	Nominal Impedance (ohms)
S280W502-1	100

Differential Twinax Contacts
CABLE USAGE GUIDE
ARINC 600 Rack & Panel Connectors

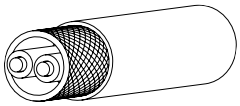

Cable Type		Nominal Impedance (ohms)
ABS0386WF24		100
ASNE0272TK22		100
ASNE0272TK24		100
Tensolite	24463/9P025X-2(LD)	100

Triax Contacts
CABLE USAGE GUIDE
D38999 Series I, II, III & SJT Connectors

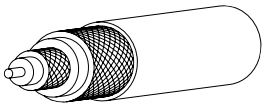

Cable Type		Nominal Impedance (ohms)
JN1088WT		50
5M2397-002		75
81264-02		75
JN1088WU		75
Gore	GSC-03-81497-00	75
RG179 (Coax Cable)		75
Tensolite	28988/50823LXX-1	75
Tensolite	28988/50823LXX-1	75
Thermatics	12447	75
10602 (Twinax Cable)		77
5M2559-001		95
81264-01		95
ST5M1323-001		95
Champlain	81-00700	95
Tensolite	28598/9C026LT-1	95
	26895/90334X-1	95
Teledyne	13809	95
11914/1		95
Times AA6603		95

Use the Cable Usage Guides on this page for Coax Contacts as follows:

1. Locate the cable you are using in Cable Type column. For cables not listed consult Amphenol Aerospace.
2. Refer to the Amphenol connector section which features contacts for this cable, as indicated by a • in the appropriate column. If more than one connector series utilizes contacts designed for your cable, investigate each of them. Connector size, performance features and insert pattern availability may influence your choice.
3. Order your connector and coax contact by following the procedure given in the section for the connector series selected. These instructions are supplemented by the Amphenol Catalog Section covering the basic connector.
4. The Additional Contacts column of this guide is used to indicate an additional availability of contact designs for older cable types or capability. Consult Amphenol Aerospace for further information.

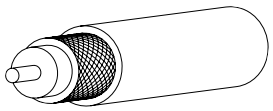

Coax Contacts
CABLE USAGE GUIDE

Cable Type		Nominal Impedance (ohms)	For Circular (MIL-DTL-38999 type)	For Standard & Heavy Duty Circular (MIL-DTL-5015 type) (MIL-DTL-22992 type)	For Rectangular Connectors	Additional Contacts (Consult Amphenol)
RG-5B/U	(M17/073-RG212)	50				•
RG-6A/U	(M17/2-RG6)	75				•
RG-7/U		97				•
RG-9B/U	(M17/075-RG214)	50				•
RG-11A/U	(M17/6-RG11)	75				•
RG-12A/U	(M17/6-RG12)	75				•
RG-13A/U		74				•
RG-21A/U		53				•
RG-55B/U	(M17/084-RG223)	53		•	•	
RG-58C/U	(M17/028-RG058)	50		•	•	
RG-58	(M17/155-00001)	50	•			
RG-59B/U	(M17/29-RG59)	75		•		
RG-62A/U	(M17/030-RG062)	93		•		
RG-62B/U		93		•		
RG-63B/U	(M17/31-RG63)	125				•
RG-71B/U	(M17/90-RG71)	93				•
RG-87A/U		50				•
RG-115/U		50				•
RG-115A/U		50				•
RG-116/U		50				•
RG-122/U	(M17/054-RG122)	50			•	•
RG-133A/U	(M17/100-RG133)	95				•
RG-140/U	(M17/110-RG302)	75		•		
RG-141A/U		50		•	•	
RG-142A/U		50		•	•	•
RG-142B/U	(M17/060-RG142)	50	•	•	•	•
RG-143A/U		50				•
RG-161/U		70	•	•		
RG-174A/U	(M17/119-RG174)	50	•	•		
RG-178B/U	(M17/093-RG178)	50	•	•		
RG-179B/U	(M17/094-RG179)	75	•	•		
RG-180B/U	(M17/095-RG180)	95	•	•	•	
RG-187A/U	(M17/094-RG179)	75	•	•		
RG-188A/U	(M17/113-RG316)	50	•	•		
RG-188 Double Braid		50				
RG-195A/U	(M17/095-RG180)	95	•	•	•	
RG-195 Double Braid		95				
RG-196A/U	(M17/169-00001)	50	•	•		
RG-210/U		93		•		
RG-212/U	(M17/073-RG212)	50		•		•
RG-214/U	(M17/075-RG214)	50				•
RG-216/U	(M17/77-RG216)	75				•
RG-222/U		50				•
RG-223/U	(M17/084-RG223)	50	•	•	•	
RG-225/U	(M17/86-RG225)	50				•
RG-227/U		50				•
RG-302/U	(M17/110-RG302)	75		•		

CHART CONTINUES ON NEXT PAGE

NOTE: For information on coax contacts for Miniature circular connectors, MIL-DTL-26482 Series 1, see catalog 12-070 and consult Amphenol Industrial Operations.

NOTE: MIL-DTL-38999 supersedes MIL-C-38999.
MIL-DTL-5015 supersedes MIL-C-38999.
MIL-DTL-22992 supersedes MIL-C-22992

Coax Contacts
CABLE USAGE GUIDE, cont.

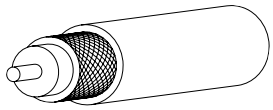

Cable Type		Nominal Impedance (ohms)	For Circular (MIL-DTL-38999 type)	For Standard & Heavy Duty Circular (MIL-DTL-5015 type) (MIL-DTL-22992 type)	For Rectangular Connectors	Additional Contacts (Consult Amphenol)
RG-303/U	(M17/111-RG303)	50		•	•	
RG-304/U	(M17/112-RG304)	50				•
RG-316/U	(M17/113-RG316)	50	•	•		
RD-316 Double Braid	(M17/152-00001)	50	•			
RG-400	(M17/128-RG400)	50	•			
M/A-COM 5M2869-001		50	•		•	
5022A1311-D		50	•			
Beldon 9307		50	•			
FA-19X		50	•			
T-Flex-402		50	•			
T-Flex-405		50	•			
Filotex ET124962		50	•			
JN1088WT	(Triax)	50	•			
JN1088WU	(Triax)	75	•			
PAN6422XQ		50	•			
PAN6422XY		75	•			
PAN6595XM	(Triax)	75	•			
Haveg	51-04486		•			
	81-00207		•			
Gore	GWN1159A		•			
	CXN3403		•			
Times	AA3248		•			
Teledyne	11299		•			
Raychem	5021D1331-0	50	•			
	5021D1331-9	50	•			
	5022D1312-9	50	•			
	7527A1318	75	•			
	9527A1314	95	•			
	9528A1318	95	•			
	9530A5314	95	•			
	9530D5314	95	•			
Thermatics	2929-29		•			
Tensolite	30850/87T-1		•			
Thermax	50C-25A-DS-1		•			
	ESC352001	50	•			
	ESC432101	50	•			

For Cable not found in the Coax Contact Cable Usage Guide, refer to these general dimensional ranges:
(In general, for D38999 Connectors, the size 8, 12 and 16 Coax Contacts will terminate cable in the following ranges)

SIZE 16

.012 / .0215 Center Conductor (Stranded)
.031 / .066 Dielectric
.085 Max Outer braid (must be round for crimp termination)
.102 Max. Jacket

SIZE 12

.012 / .0215 Center Conductor (Stranded)
.031 / .105 Dielectric
.126 Max Outer braid (must be round for crimp termination)
.145 Max. Jacket

SIZE 8

.012 / .0395 Center Conductor (Stranded)
.055 / .133 Dielectric
.180 Max Outer braid (must be round for crimp termination)
.201 Max. Jacket

Special coax contacts may be available for cables outside of ranges shown. Consult Amphenol Aerospace for further assistance in selection of coax contact cables.

Amphenol® Connectors are ideally suited for the incorporation of shielded contacts for high performance interconnection applications. The circular family is built around MIL-DTL-38999 specifications, with Mil-approved and commercial styles offered. Normal operating voltage for circulars with power contacts only is up to 900 VAC (RMS) at sea level.

The MIL-DTL-38999 family offer these features for contact termination flexibility:

- Widest selection of insert arrangements that can incorporate:
  - Size 8 high speed Quadrax and Differential Twinax contacts for MIL-DTL-38999 Series III (specially modified to accommodate keyed contacts)
  - Transition adapters for use in attaching D38999 Series III connectors with high speed quadrax or differential contacts to PCB boards
  - Size 8, 12 and 16 Coax contacts
  - Size 8 and 12 Twinax contacts
  - Size 8, 10 & 12 Triax contacts
- Wide selection of connector shell styles and sizes
- Scoop-Proof recessed design in LJT-R, TV-R and SJT-R connectors provide protection for contacts
- Standard power contacts are crimp rear release, qualified to SAE AS39029
- Coax, Twinax, and Triax contacts employ the same retention system as power contacts, simplifying user substitution

TV-R, Tri-Start, D38999 Series III

- *High performance capability series for both general duty and severe environment applications*
- *Offers the widest range of Subminiature Family Mil-Spec qualified options in contact and connector styles*
- *Threaded coupling; completely mates in one turn; crimp termination*
- *Superior EMI/EMP shielding effectiveness*
- *Scoop-proof design (recessed pins)*
- *Available in aluminum, stainless steel and firewall, or lightweight composite styles*

See 38999 section Series III for complete information on this section.

GENERAL ORDERING INFORMATION

Amphenol MIL-DTL-38999, which feature rear removable contacts, are normally supplied with a full complement of power contacts, separately packaged. Coax, twinax and triax contacts are ordered by part number as referenced in the part number charts on the following pages of this catalog, and are substituted for the power contacts at the time of the cable or equipment assembly. If the application is for coax, twinax or triax contacts only, the connector may be ordered *less contacts* and no power contacts will be supplied.

JT-R, D38999 Series II

See 38999 section Series II, JT for complete information on this series.

- *Shorter profile connector series for applications requiring maximum space savings*
- *Bayonet coupling, crimp termination*
- *Also available in solder termination types under MIL-DTL-27599 Series II*

LJT-R, D38999 Series I

See 38999 section Series I, LJT for complete information on this series.

- *Scoop-proof (recessed pins)*
- *Bayonet coupling, crimp termination*
- *Also available in solder termination types under MIL-DTL-27599 Series II*

HOW TO ORDER CONNECTORS AND HIGH FREQUENCY CONTACTS

- Select the Circular Series desired.
  (See features of each series given briefly on this page and in-depth in the other sections of this catalog, which are on-line at www.amphenol-aerospace.com).
  Series I - LJT-R Connectors
  Series II - JT-R Connectors
  Series III - TV-R Connectors
  SJT* - SJT-R Connectors
  See Amphe-Lite (Industrial 38999 type) Catalog 12-094
- Select the quadrax, differential twinax, coax, twinax and/or triax contacts or the transition adapters that are needed from the tables on the following pages that correspond to the cable being used.
- Select the insert arrangement to accommodate required number of contacts. Insert patterns for quadrax and differential twinax contacts are on pages 387,388. Insert patterns for coax, twinax and triax contacts are on pages 404-406.
- Complete the connector part number from the connector series catalog, incorporating the chosen insert pattern number. See detailed how to order page 389 for ordering 38999, Series III with quadrax and differential twinax contacts. Consult Amphenol for assistance in ordering 38999 circulars with coax, twinax and triax contacts.
- Consult Amphenol Aerospace for ordering information for connectors with PC tail contacts, and for transition adapters.
- If connector is ordered less contacts, power contacts and/or sealing plugs may be ordered separately to fill out the insert arrangement.

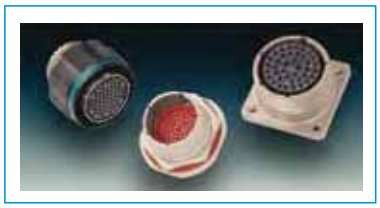

Amphe-Lite, 38999 Type

See Catalog 12-094 for complete information on this series.

- *Commercial/Industrial 38999 Series III type*
- *Cost effective high performance connector for severe environments or general duty industrial applications*
- *Consult Amphenol Industrial Operations for further information 12-094 catalog is on-line at www.amphenol-industrial.com.*

SJT-R, 38999 Type

See the SJT section of this catalog.

- *Amphenol proprietary series (non-MS) which is a further expansion of the basic JT family, but incorporates the LJT scoop-proof design*
- *Compliant with several European specifications*

NOTE: SAE AS39029 supersedes MIL-C-39029.
NOTE: MIL-DTL-38999 supersedes MIL-C-38999.
MIL-DTL-27599 supersedes MIL-C-27599

Amphenol Aerospace

Amphenol® Quadrax Contacts -offer several advantages for high data transfer rates, low power consumption and excellent EMI compatibility:

- Four strategically spaced inner contacts form two 100 or 150 Ohm matched impedance differential pairs
- Outer contact has rugged wall section for durability
- Available in size 8 crimp termination style
- Also available in size 8 with PC tails (see page 379)
- Requires modification of MIL-DTL-38999 connector to accommodate keyed contacts

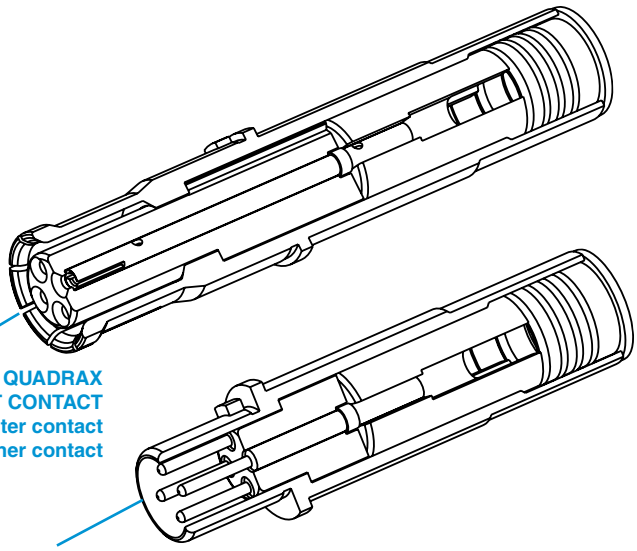

TYPICAL QUADRAX SOCKET CONTACT has socket outer contact with a socket inner contact

TYPICAL QUADRAX PIN CONTACT has pin outer contact with a pin inner contact

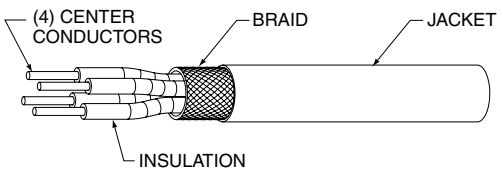

Cable Illustration - Quadrax Contact

Quadrax Pin with 8P8C "RJ45" Jack

Quadrax Pin Size 8 and MIL-DTL-38999 Series III Connector

Quadrax in an Eight Wire Gigabit Ethernet Assembly

Quadrax Contacts are gold plated, crimp termination

Finish of mating contacts parts: supplied with 0.000050 min. gold over nickel on mating parts. Consult Amphenol for availability of other finishes.

Quadrax Size 8 Contact Performance:

- Bandwidth: Up to 3 Gigahertz
- Data Rate: Exceeding 3 Gbits/sec.
- Voltage Rating: 500 Vrms max. @ sea level
- Dielectric Withstanding Voltage: 1000 VAC rms between all inner contacts @ sea level, 500 VAC rms between inner and outer contacts @ sea level

Suggested Numbering for Quadrax Contacts

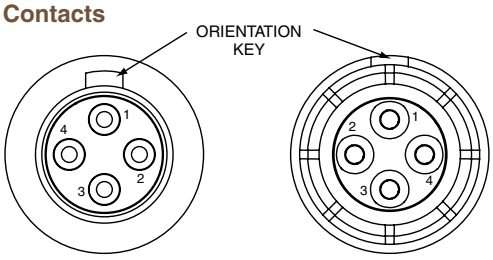

Differential Pairs, contacts 1-3, 2-4.

See page 389 for part number ordering of popularly used 38999 Series III connectors with 100 ohm quadrax contacts.

Quadrax differential pairs are 1and 3, 2 and 4.

Suggested Strain Relief - Insert Arrangements 9-5 or 19-18 with Quadrax Contacts

Due to the piggyback grommet interference with normal strain reliefs on the shell size 9 only, the recommended strain relief for the connector is: Amphenol part number TGW-R-5309-10 (OD Cad) or TGF-R-5309-10 (Electroless nickel)

- shell size 9 only. For 19-18 insert pattern, recommended backshell: Glenair 367-221-NF. This is recommended due to the proximity of the size 8 contacts in relation to the shell.

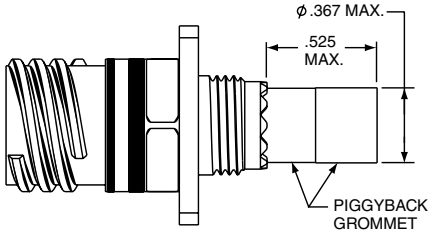

Also see Quadrax contacts for ARINC 600 and R27 Rack and Panel Connectors on page 411 and 412.

TV-R Series, MIL-DTL-38999 Series III* Connectors

QUADRAX CONTACTS FOR USE IN TV-R CONNECTORS								
Cable	Contact Part Number (Termination Instruction Sheet)**		Impedance (Ohms)	Inner Conductor (AWG)	Contact Size	Electrical Protocol††	Crimping Tools	
	Pin	Socket					Inner Contact	Outer Contact
Draka Fileca F-4703-3, F4704-4, Filotex ET 2PC236, Filotex ET2PF870, PIC Wire E50424 ABS0972, Tensolite 23450/04090X-4(LD)	21-33384-21 (L-2119-A)	21-33385-21 (L-2119-A)	100	24	8	Ethernet, 1000 Base-T Gigabit Ethernet	M22520/2-01 with Positioner M22520/2-37 or with Daniels Positioner K709	M22520/5-01 with Die Set M22520/5-45 (Location A)
Tensolite NF24Q100, NF24Q100-01, 24443/9P025X-4(LD), S280W502-4, 24443/03130X-4(LD), 24443/C20714X-4(LD), 24450/0120X-4(LD), NF24-2Q100, TYCO CEC-RWC-18664, GORE GSC-01-81869-01, 24443/03166X-4(LD), Thermax T956-4T200, Pic Wire E51424, Thermax MX100Q-24, NF24Q100-01-200C (Space)	21-33384-51 (L-2119-D)	21-33385-51 (L-2119-D)		24		Ethernet, 1000 Base-T Gigabit Ethernet		
Tensolite NF22Q100, NF22Q100-01, Thermax 956-5, GORE RCN 7688 Draka Fileca F-4704-5, ABS1503 KD 24	21-33384-61 (L-2119-H)	21-33385-61 (L-2119-H)		22		Ethernet (100 Mbps), 1000 Base-T Gigabit Ethernet (1 Gbps)		
Tensolite NF26Q100, NF26Q100-01, NF26-2Q100, PIC E51426	21-33384-71 (L-2119-AB)	21-33385-71 (L-2119-AB)		26		Ethernet (100 Mbps), 1000 Base-T Gigabit Ethernet (1 Gbps)		
Draka Fileca F-4704-6, Gore RCN 8672	21-33384-151 (L-2119-AW)	21-33385-151 (L-2119-AW)		26		Ethernet (100 Mbps), 1000 Base-T Gigabit Ethernet (1 Gbps)		
Tensolite NF24Q100-01 (same as 21-3338( ) -51, uses EMI Piggyback)	21-33384-161 (L-2119-BE)	21-33385-161 (L-2119-BE)		24		Ethernet (100 Mbps), 1000 Base-T Gigabit Ethernet (1 Gbps)		
Gore RCN8513, JSFY18-3	21-33384-171 (L-2119-BN)	21-33385-171 (L-2119-BN)		22		Ethernet (100 Mbps), 1000 Base-T Gigabit Ethernet (1 Gbps)		
Tensolite NF22Q100 Special Box pattern, only mates with 21-333 ( )-181	21-33384-181 (L-2119-BP)	21-33384-181 (L-2119-BP)		22		Ethernet (100 Mbps), 1000 Base-T Gigabit Ethernet (1 Gbps)		
Tensolite NF24Q100, NF24Q100-01 for 2.5 Gbps applications	21-33384-191 (L-2119-BS)	21-33385-191 (L-2119-BS)		24		Serial FPDP Applications (2.5 Gbps)		
USB2 (28433/02171LX-4)	21-33384-101†	21-33385-101†	90			USB2.0 (480 Mbps)		
Tensolite 24450/03089X-4(LD)	21-33384-211	21-33385-211	110	24		IEEE 1394B Firewire		
JSFY02-1, JSFY18	21-33384-221	21-33385-221		24		IEEE 1394B Firewire		
Gore RCN8487, JSFY18	21-33384-231	21-33385-231		24		IEEE 1394B Firewire		
Tensolite 24450/03089X-4(LD) Same as 21-3338( )-211 but Box pattern, mates with 21-3338( )-241 only	21-33384-241†	21-33385-241†		24		IEEE 1394B Firewire		
Tensolite 26473/02006X-4(LD)/Gore RCN8328 (not for new designs, use 21-33450/1 series)	21-33384-31 (L-2119-B)	21-33385-31 (L-2119-B)	150	26				

CHART CONTINUES ON NEXT PAGE

QUADRAX CONTACT DATA

Contacts are inserted by hand. Refer to termination instructions listed. Contacts are removed with a removal tool. Recommended tool is MIL-I-81969/14-06, Daniels DRK-264-8. Refer to termination instructions listed.

Finish of mating contact parts: Contact part numbers shown in the chart above are supplied gold plated per ASTM B488 Type II, Code C, .000050 min. thick over nickel plate per AMS-QQ-N-290, Class 2, .000030/.000150 thick.

CONTACT ORDERING: Example number given in chart 21-33384-21 should be ordered as 21-033384-021; example number 21-33384-151 should be ordered as 21-033384-151. Adding Zeros is necessary for Amphenol ordering process on all contact numbers
Daniels crimping tools are available from Daniels Mfg. Corp. 6103 Anno Ave., Orlando, FL 32809

* Requires modified connector to accommodate keyed contacts.
**Termination instructions are packaged with each contact and can be found on-line at: www.amphenol-aerospace.com/serviceinstructions.asp
† Consult Amphenol Aerospace for current release of this contact or instruction sheet if applicable.
†† Test reports available for indicated protocols. Consult Amphenol Aerospace.

TV-R Series, MIL-DTL-38999 Series III* Connectors

QUADRAX CONTACTS FOR USE IN TV-R CONNECTORS								
Cable	Contact Part Number (Termination Instruction Sheet)**		Impedance (Ohms)	Inner Conductor (AWG)	Contact Size	Electrical Protocol††	Crimping Tools	
	Pin	Socket					Inner Contact	Outer Contact
Tensolite 26473/02006X-4(LD) Same as 21-33384/5-31 but box pattern (not for new designs, use 21-33450/1 series)	21-33384-201†	21-33385-201†	150	26	8		M22520/2-01 with Positioner M22520/2-37 or with Daniels Positioner K709	M22520/5-01 with Die Set M22520/5-45 (Location A)
Tensolite 26473/02006X-4(LD), Gore RCN8328	21-33450-001 (L-2119-BW)	21-33451-001 (L-2119-BW)		26		Fibre-Channel (1 GBPS, 2 GBPS, 1G/2G), 1000 Base-CX (1.25 GBPS), SCSI-2 (3.2 GBPS)		
Tensolite 26473/02006X-4(LD), Gore RCN8328 (same as 21-33450/1-1 except box pattern. Mates with 21-33450/1-11 only.	21-33450-011†	21-33451-011†		26		Fibre-Channel (1 GBPS, 2 GBPS, 1G/2G), 1000 Base-CX (1.25 GBPS), SCSI-2 (3.2 GBPS)		

PCB QUADRAX CONTACTS FOR USE IN TV-R CONNECTORS				
PCB Quadrax Contacts	Contact Part Number		Impedance (Ohms)	Contact Size
	Pin	Socket		
PCB (1.035 Length) Pre-tinned tails	21-33398-21	21-33397-21	100	8
PCB (.866 Length)	21-33398-31	21-33397-31	100	
PCB Right Angle, inner contacts box pattern	21-33425-1		100	
PCB (.494 Length) Pre-tinned tails	21-33398-71		150	
PCB (1.194 Length) Pre-tinned tails	21-33398-101		100	
PCB (.859 Length)	21-33398-121		100	
PCB (.741 Length)	21-33398-271†		100	
PCB (1.035 Length)	21-33398-291	21-33397-291	100	
PCB (.836 Length)		21-33397-301	150	
PCB (1.035 Length) Pre-tinned tails	21-33398-61	21-33397-61	150	
PCB (1.035 Length) mates to 21-33451 series	21-33452-11†		150	
PCB (1.035 Length) mates to 21-33450 series		21-33453-11†	150	
PCB (.815 Length) mates to 21-33451 series	21-33452-21†		150	
PCB (.815 Length) mates to 21-33450 series		21-33453-21†	150	
PCB (.815 Length) Pre-tinned tails, mates to 21-33451 series	21-33452-31†		150	
PCB (.815 Length) Pre-tinned tails, mates to 21-33450 series		21-33453-31†	150	
PCB .866 Length) mates to 21-33451 series	21-33452-41†		150	
PCB (.866 Length) mates to 21-33450 series		21-33453-41†	150	
PCB (.494 Length) mates to 21-33451 series	21-33452-51†		150	
PCB (.494 Length) mates to 21-33450 series		21-33453-51†	150	
PCB (.840 Length) Pre-tinned tails	21-33398-81		150	
PCB (.780 Length) Pre-tinned tails	21-33398-131		150	
PCB (.840 Length) Pre-tinned tails	21-33398-91		100	
PCB (.708 Length)	21-33398-111		100	
PCB (.605 Length)	21-33398-191		100	
PCB (.494 Length)	21-33398-231		100	
PCB (.741 Length)	21-33398-241	21-33397-241	100	
PCB (.806 Length)	21-33398-281		100	
PCB (.940 Length)	21-33398-311		100	
PCB (.939 Length)	21-33398-361		100	
PCB (.672 Length)	21-33398-371		100	
PCB (.914 Length)	21-33398-381		100	
PCB (.866 Length)	21-33398-411		100	
PCB (.901 Length)		21-33397-341	100	
PCB (.871 Length)		21-33397-351	100	
PCB (1.169 Length)		21-33397-421	100	

CONTACT ORDERING: Example number given in chart above 21-33384-201 should be ordered as 21-033384-201; example number given in chart at left 21-33398-21 should be ordered as 21-033398-021. Adding Zeros is necessary for Amphenol ordering process on all contact numbers

Daniels crimping tools are available from Daniels Mfg. Corp. 6103 Anno Ave., Orlando, FL 32809

* Requires modified connector to accommodate keyed contacts.

**Termination instructions are packaged with each contact and can be found on-line at: www.amphenol-aerospace.com/serviceinstructions.asp

† Consult Amphenol Aerospace for current release of this contact or instruction sheet if applicable.

†† Test reports available for indicated protocols. Consult Amphenol Aerospace.

SEALING PLUGS	
Sealing Plugs for use with D38999 Connectors using Quadrax Contacts - Size 8 Cavities	Part Number
Standard Plastic	T3-4008-59P
Standard Plastic to be used with PCB tails (shorter tail length)	T3-4008-59P1
Metal sealing plug - can be used when mating with contacts on mating half	21-33899-8Q1
Metal sealing plug used with PCB's and mating contact on mating half	21-33899-8Q2

PIGGYBACK GROMMET	
Grommet for use with D38999 Connectors using Quadrax Contacts	Part Number
Metallized piggyback grommet	21-33321-23

Indicated length given in chart at left is the distance from the rear of the contact retention shoulder to the tip of the PCB tails.

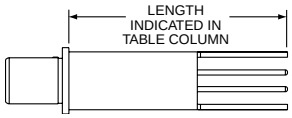

Note: it does not indicate stickout length when installed in D38999 connector.

Amphenol® Differential Twinax Contacts -

Offer several advantages for high data transfer rates, low power consumption and excellent EMI compatibility:

- Two strategically spaced inner contacts form two 100 or 150 Ohm matched impedance differential pairs
- Outer contact has rugged wall section for durability
- Available in size 8 crimp termination style
- Also available in size 8 with PC tails (see page 381)
- Requires modification of MIL-DTL-38999 connector to accommodate keyed contacts

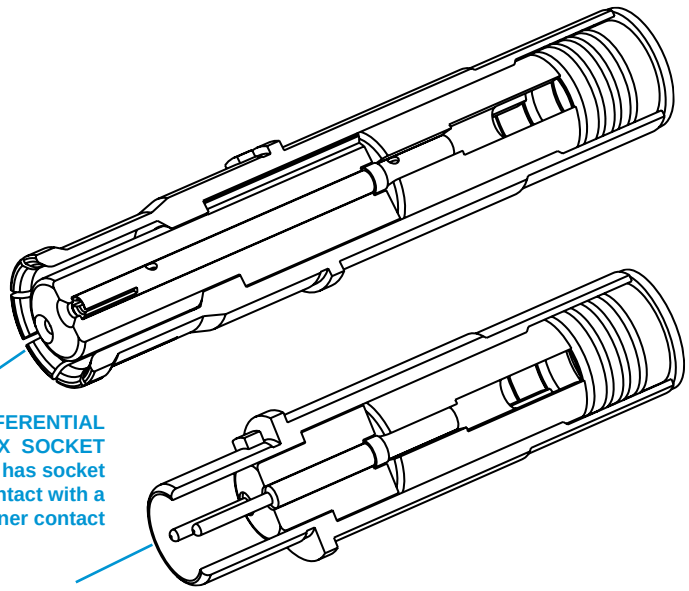

TYPICAL DIFFERENTIAL TWINAX SOCKET CONTACT has socket outer contact with a socket inner contact

TYPICAL DIFFERENTIAL TWINAX PIN CONTACT has pin outer contact with a pin inner contact

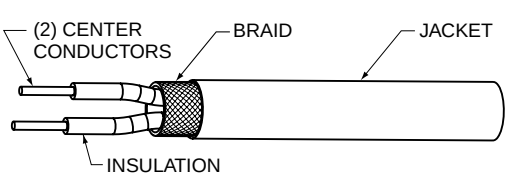

Cable Illustration - Differential Twinax Contact

Differential Twinax Socket Contact

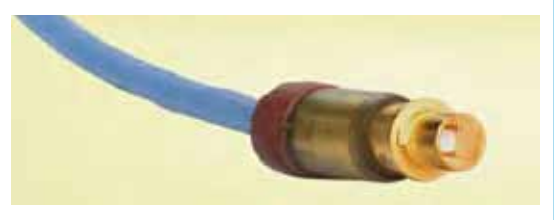

Differential Twinax Pin Contact

Differential Twinax Contacts are Gold plated, Crimp Termination

Finish of mating contacts parts: supplied with 0.000050 min. gold over nickel on mating parts. Consult Amphenol for availability of other finishes.

Differential Twinax Size 8 Contact Performance:

- Bandwidth: Up to 3 Gigahertz
- Data Rate: Exceeding 3 Gbits/sec.
- Voltage Rating: 500 Vrms max. @ sea level
- Dielectric Withstanding Voltage: 1000 VAC rms between all inner contacts @ sea level 500 VAC rms between inner and outer contacts @ sea level

Suggested Numbering for Differential Twinax Contacts

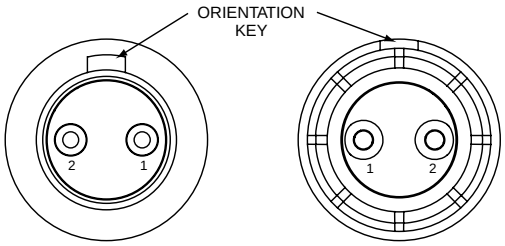

TV-R Series, MIL-DTL-38999 Series III* Connectors

DIFFERENTIAL TWINAX CONTACTS FOR USE IN TV-R CONNECTORS							
Cable	Contact Part Number (Termination Instruction Sheet)**		Impedance (Ohms)	Contact Size	Electrical Protocol††	Crimping Tools	
	Pin	Socket				Inner Contact	Outer Contact
Tensolite 24463/05099X-8(LD), Thermax MX 100-24, Tensolite 24463/9P025X-2(LD), Thermax 12814, ST5M1284-003 (98 Ohm), 26463/70460X-2 (98 Ohm), PIC E10224, Fileca 2709-3, NF24T100-200C (Space), S280W502-1	21-33387-21 (L-2119-E)	21-33388-21 (L-2119-E)	100	8	Ethernet, USB	M22520/2-01 with Positioner M22520/2-37 or with Daniels Positioner K709	M22520/5-01 with Die Set M22520/5-45 (Location A)
GORE GSC-05-827300-00	21-33387-51*** (L-2119-AY)	21-33388-51*** (L-2119-AY)					
Tensolite 26453/03184X-2(LD), Thermax 956-626Z, GORE GSC-05-827300-00	21-33387-41 (L-2119-T)	21-33388-41 (L-2119-T)					
23460/05114X-2(LD), PIC E1024	21-33387-61 (L-2119-BH)	21-33388-61 (L-2119-BH)					
Raychem 0026A0024, M17/176-00002 (77 Ohm)	21-33387-71 (L-2119-BJ)	21-33388-71 (L-2119-BJ)					
JSFY11-24, Tensolite 24463/03220T-2(LD), Thermax 956-1T200	21-33387-91 (L-2119-BT)	21-33388-91 (L-2119-BT)					
S280W502-6, Tensolite 24463/9P026X-2(LD)	21-33387-101 (L-2119-AK)	21-33388-101 (L-2119-AK)					
Tensolite 26483/03071X-2(LD)	21-33387-31 (L-2119-AC)	21-33388-31 (L-2119-AC)	150				
Tensolite 26483/03071X-2(LD)	21-33456-1 (L-2119-BX)†	21-33457-1 (L-2119-BX)†			Fibre Channel, 1000 Base-CX Ethernet		

PCB DIFFERENTIAL TWINAX CONTACTS FOR USE IN TV-R CONNECTORS				
PCB Quadrax Contacts	Contact Part Number		Impedance (Ohms)	Contact Size
	Pin	Socket		
PCB (1.035 Length)	21-33834-1	21-33835-1	100	8
PCB (.788 Length)	21-33834-31	21-33835-31		
PCB (.494 Length)	21-33834-41	21-33835-41		
PCB (.939 Length)	21-33834-51	21-33835-51		
PCB (.780 Length)	21-33834-61	21-33835-61		
PCB (.871 Length)	21-33834-71	21-33835-71		
PCB (.937 Length)	21-33834-81	21-33835-81		
PCB (1.035 Length)	21-33834-91	21-33835-91		
PCB (.843 Length)	21-33834-101	21-33835-101		
PCB (.806 Length)	21-33834-111	21-33835-111		
PCB (.908 Length)	21-33834-121	21-33835-121		
PCB (.530 Length)	21-33834-131	21-33835-131		
PCB (.819 Length)	21-33834-141	21-33835-141		
PCB (1.035 Length)	21-33834-21	21-33835-21	150	
PCB (1.035 Length) mates to 21-33456/57 series	21-33458-001	21-33457-001		

CONTACT ORDERING: Example number given in chart above 21-33387-21 should be ordered as 21-033387-021; example number given in chart left 21-33834-1 should be ordered as 21-033834-001. Adding Zeros is necessary for Amphenol ordering process on all contact numbers Daniels crimping tools are available from Daniels Mfg. Corp. 6103 Anno Ave., Orlando, FL 32809

* Requires modified connector to accommodate keyed contacts.

*** Indicated contact is vacuum degassed

†† Test reports available for indicated protocols. Consult Amphenol Aerospace.

**Termination instructions are packaged with each contact and can be found on-line at: www.amphenol-aerospace.com/serviceinstructions.asp

† Consult Amphenol Aerospace for current release of this instruction sheet.

DIFFERENTIAL TWINAX CONTACT DATA

Contacts are inserted by hand. Refer to termination instructions listed. Contacts are removed with a removal tool. Recommended tool is MIL-I-81969/14-06, Daniels DRK-264-8. Refer to termination instructions listed.

Finish of mating contact parts: Contact part numbers shown in the chart above are supplied gold plated per ASTM B488 Type II, Code C, .000050 min. thick over nickel plate per AMS-QQ-N-290, Class 2, .000030/.000150 thick.

Indicated length given in chart at left is the distance from the rear of the contact retention shoulder to the tip of the PCB tails.

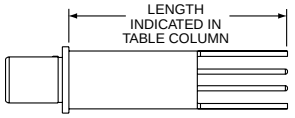

Note: it does not indicate stickout length when installed in D38999 connector.

General Description

Amphenol® Quadrax Contacts for Printed Circuit Board Attachment

- Available for MIL-DTL-38999 Series III Circular connectors with straight PC tail termination and with compliant pin termination. These provide the ideal solution for bringing high speed data transmission to the board.

Compliant Pin Quadrax and PC Tail Quadrax Contacts

MIL-DTL-38999, SERIES III CONNECTOR WITH PC TAIL CONTACTS. This arrangement has 33 size 22D and 2 Quadrax PC tail contacts.

MIL-DTL-38999, SERIES III CONNECTOR WITH PC TAIL CONTACTS. This arrangement has 8 Quadrax PC tail contacts.

Amphenol® Quadrax Contacts for Rectangular Board Level Connectors

- Incorporate the same size 8 Quadrax PCB contacts as used in circular 38999 connectors.

- Size 8 Quadrax Compliant contacts with hole diameters:
  .025 ±.002 PTH Quadrax contact
  .040 ±.003 PTH shell grounding
  Accommodates backplane .125 inch min. thickness
- Consult Amphenol Aerospace for availability of additional connector configurations

4 POSITION BOARD LEVEL CONNECTOR WITH QUADRAX

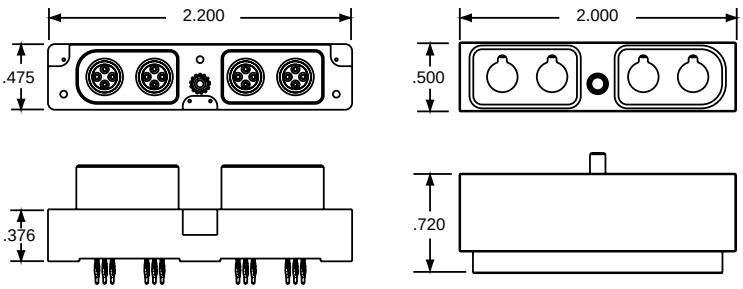

Compliant Pin Quadrax Board Level Connector

8 POSITION BOARD LEVEL CONNECTOR WITH QUADRAX

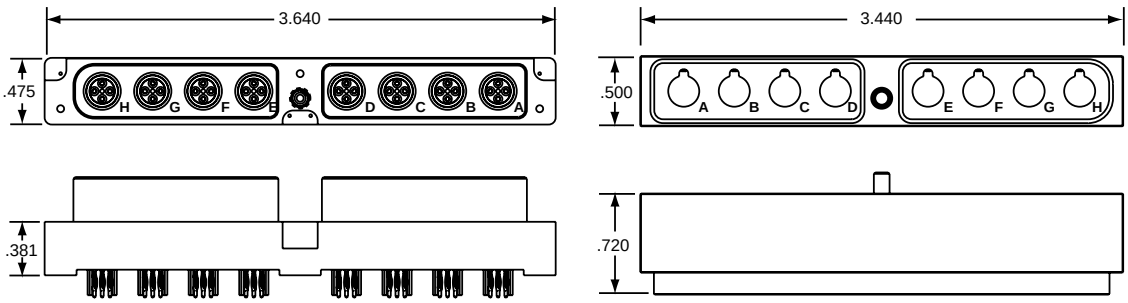

General Description

Amphenol® Transition Adapters - Are used to facilitate launching of controlled impedance signals to printed circuit boards. Amphenol provides transition adapters in both contact types:

- Quadrax transition adapters, 90° or straight receptacles threaded or cable to board style
- Differential twinax transition adapters, 90° or straight receptacles, threaded or cable to board style

90° Quadrax Receptacle and Plug Transition Adapter

Suggested Numbering for Transition Adapters with Quadrax Contacts

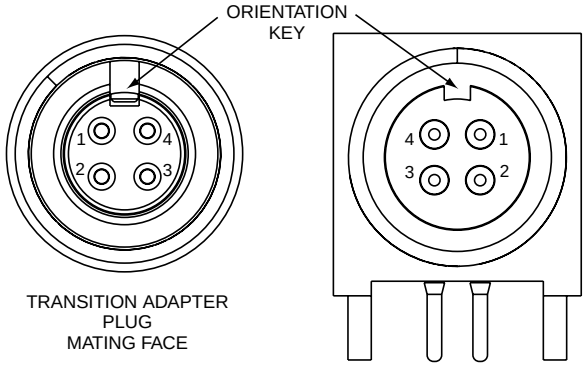

90° Differential Twinax Receptacle and Plug Transition Adapter

TRANSITION ADAPTER DATA

Finish of mating contact parts: Contacts are supplied gold plated per ASTM B488 Type II, Code C, .000050 min. thick over nickel plate per AMS-QQ-N-290, Class 2, .000030/.000150 thick.

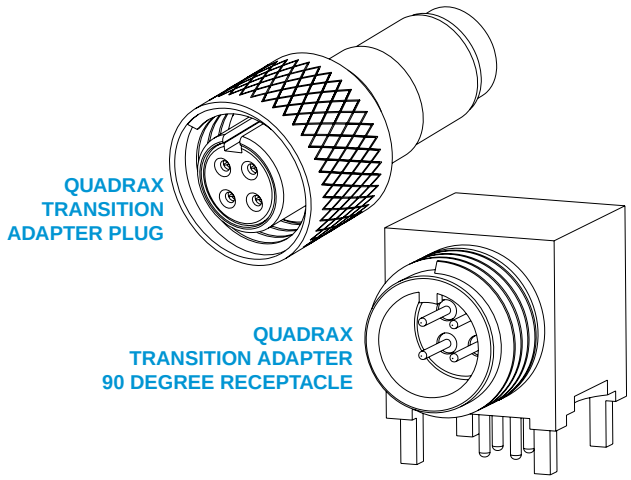

ELECTRICAL PROTOCOLS FOR QUADRAX TRANSITION ADAPTERS

Part Number		Impedance (Ohms)	Electrical Protocol††
Plug	Receptacle		
21-33836-31		100	Ethernet, gigabit Ether
21-33836-41			Ethernet, gigabit Ether
21-33836-51			Ethernet, gigabit Ether
21-33836-61			Ethernet, gigabit Ether
	21-33837-81 (90 degree)		
	21-33837-91 (90 degree)		
	21-33837-41 (90 degree)		
	21-33837-51 (straight)		Ethernet, gigabit Ether
	21-33837-61 (90 degree)		
	21-33837-141 (90 degree)		
21-33837-101			
21-33836-21		150	1000 Base CX, Fibre channel
	21-33837-21 (90 degree)		1000 Base CX, Fibre channel
	21-33837-211 (jam nut)		
	21-33837-31 (straight)		
	21-33837-71 (90 degree)		
21-33837-111			

ELECTRICAL PROTOCOLS FOR DIFFERENTIAL TWINAX TRANSITION ADAPTERS

Part Number		Impedance (Ohms)	Electrical Protocol††
Plug	Receptacle		
21-33832-81		100	
21-33832-21			Ethernet
	21-33833-21 (90 degree)		
	21-33833-31 (90 degree)		Ethernet
	21-33833-151 (90 degree)		
21-33832-111†			
	21-33833-161† (90 degree)		
	21-33833-171† (90 degree)		
	21-33833-91 (90 degree)		
	21-33833-51 (90 degree)		
	21-33833-141 (90 degree)		
21-33832-91		150	
	21-33833-111 (90 degree)		
	21-33833-181† (90 degree)		
	21-33833-101 (90 degree)		

† Consult Amphenol Aerospace for current release of this adapter.
††Test reports available for indicated protocols; consult Amphenol Aerospace.

Application Data

100 OHM QUADRAX TRANSITION ADAPTERS FOR LAUNCHING CONTROLLED IMPEDANCE SIGNALS TO PC BOARDS

Quadrax Type Adapter/ Cable or PCB Tail Length		Illustration of Adapter	Part Number (Termination Instruction Sheet)** Plug	Part Number (Termination Instruction Sheet)** Receptacle	Impedance (Ohms)	Mating Thread Size	Crimping Tools Inner Contact	Crimping Tools Outer Contact
Quadrax Plug Adapter/ Tensolite NF24Q100	Mating plugs and receptacles	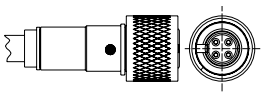	21-33836-31 (L-2119-U)		100	.375	M22520/2-01 with Positioner M22520/2-37 or with Daniels Positioner K709	M22520/5-01 with Die Set M22520/5-45 (Location A)
Quadrax Plug Adapter/ Tensolite NF22Q100, NF22Q100-01, Thermax 956-5			21-33836-41 (L-2119-W)†					
Quadrax Plug Adapter/ Draka Fileca F-4703-3, F-4704-4			21-33836-51 (L-2119-Y)					
Quadrax Plug Adapter/ NF26Q100			21-33836-61 (L-2119-AM)†					
Quadrax Plug Adapter/ Hexnut with Lock Wire Holes Tensolite NF24Q100		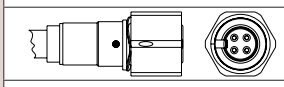	21-33836-81					
Quadrax Receptacle Straight Adapter in-line jam nut (threaded)/ GSC-10-8273900		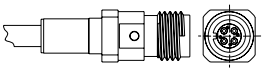		21-33837-81 (L-2119-AR)†				
Quadrax Receptacle Straight Adapter in-line (threaded)/ NF24Q100				21-33837-91 (L-2119-BL)				
PCB Quadrax Receptacle 90 Degree Adapter/ Tail Length .110				21-33837-41			NA	NA
PCB Quadrax Receptacle 90 Degree Adapter/ Tail Length .200				21-33837-201				
PCB Quadrax Receptacle Straight Adapter/ Tail Length .110				21-33837-51				
PCB Quadrax Receptacle Straight Adapter/ Special Tail Length (.200)				21-33837-61				
Quadrax Receptacle 90 degree Adapter with cable to board/ NF24Q100	Wired to board	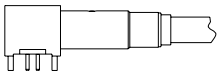		21-33837-141 (L-2119-BB)†	100		M22520/2-01 with Positioner M22520/2-37 or with Daniels Positioner K709	M22520/5-01 with Die Set M22520/5-45 (Location A)
Quadrax Receptacle 90 degree Adapter with cable to board/ ABS1503KD24				21-33837-231				
Quadrax Receptacle Straight Adapter with cable to board/ NF24Q100		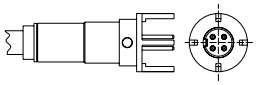		21-33837-101 (L-2119-AN)				

CONTACT ORDERING: Example number given in chart 21-33837-81 should be ordered as 21-033837-081; example number 21-33837-101 should be ordered as 21-033837-101. Adding Zeros is necessary for Amphenol ordering process on all contact numbers.
Daniels crimping tools are available from Daniels Mfg. Corp. 6103 Anno Ave., Orlando, FL 32809

** Termination instructions are packaged with each contact and can be found on-line at: www.amphenol-aerospace.com/serviceinstructions.asp
† Consult Amphenol Aerospace for current release of this adapter and instruction sheet if applicable.
See electrical protocols for transition adapters on page 383.

Amphenol Aerospace

Application Data

150 OHM QUADRAX TRANSITION ADAPTERS FOR LAUNCHING CONTROLLED IMPEDANCE SIGNALS TO PC BOARDS								
Quadrax Type Adapter/ Cable or PCB Tail Length		Illustration of Adapter	Part Number (Termination Instruction Sheet)**		Impedance (Ohms)	Mating Thread Size	Crimping Tools	
			Plug	Receptacle			Inner Contact	Outer Contact
Quadrax Plug Adapter/ Tensolite 26473/02006X-4(LD), Gore RCN8328	Mating plugs and receptacles	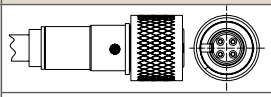	21-33836-21 (L-2119-S)		150	.375	M22520/2-01 with Positioner M22520/2-34	NA
PCB Quadrax Receptacle 90 Degree Adapter/ Tail Length .110				21-33837-21			NA	
PCB Quadrax Receptacle Straight Adapter/ Tail Length .110				21-33837-31				
Quadrax Receptacle Straight Adapter in-line Jam Nut (threaded) Tensolite 26473/02006X-4 (LD), Gore RCN8328	Wired to board	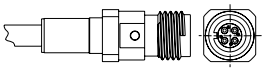		21-33837-211 (L-2119-BY)	150			
Quadrax Receptacle 90 degree Adapter with cable to board/ Tensolite 26473/02006X-4		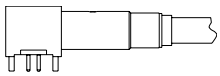		21-33837-71 (L-2119-AI)†			M22520/2-01 with Positioner M22520/2-34	M22520/5-01 with Die Set M22520/5-45 (Location A)
Quadrax Receptacle Straight Adapter with cable to board/ Tensolite 26473/02006X-4 (LD)		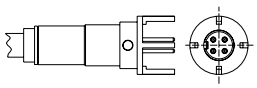		21-33837-111 (L-2119-AP)				

CONTACT ORDERING: Example number given in chart 21-33837-81 should be ordered as 21-033837-081; example number 21-33837-101 should be ordered as 21-033837-101. Adding Zeros is necessary for Amphenol ordering process on all contact numbers.
Daniels crimping tools are available from Daniels Mfg. Corp. 6103 Anno Ave., Orlando, FL 32809

**Termination instructions are packaged with each contact and can be found on-line at: www.amphenol-aerospace.com/serviceinstructions.asp
† Consult Amphenol Aerospace for current release of this adapter and instruction sheet if applicable.
See electrical protocols for transition adapters on page 383.

100 OHM DIFFERENTIAL TWINAX TRANSITION ADAPTERS FOR LAUNCHING CONTROLLED IMPEDANCE SIGNALS TO PC BOARDS

Differential Twinax Type Adapter/ Cable or PCB Tail Length		Illustration of Adapter	Part Number (Termination Instruction Sheet)** Plug	Part Number (Termination Instruction Sheet)** Receptacle	Impedance (Ohms)	Mating Thread Size	Crimping Tools Inner Contact	Crimping Tools Outer Contact
Differential Twinax Plug Adapter/ M17/176-00002 (77 ohms)	Mating plugs and receptacles	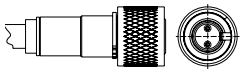	21-33832-81 (L-2119-AJ)		100	.3125	M22520/2-01 with Positioner M22520/2-34	M22520/5-01 with Die Set M22520/5-05 (Location B)
Differential Twinax Plug Adapter/ Tensolite 24463/9P025X-2(LD) 10-646060			21-33832-21 (L-2119-P)					
PCB Differential Twinax Receptacle 90 Degree Adapter/ Tail Length .110				21-33833-21			N/A	N/A
PCB Differential Twinax Receptacle Straight Adapter/ Tail Length .110				21-33833-31				
PCB Differential Twinax Receptacle Straight Adapter/ Tail Length .165				21-33833-151				
Differential Twinax Plug Adapter/Tensolite CAN22TDT120 (120 Ohm)	Mating plugs and receptacles	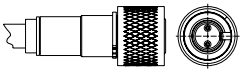	21-33832-111†		100	.375	M22520/2-01 with Positioner M22520/2-34	M22520/5-01 with Die Set M22520/5-45 (Location A)
PCB Differential Twinax Receptacle 90 degree Adapter/ Tail Length .283				21-33833-161†			N/A	N/A
PCB Differential Twinax Receptacle Straight Adapter/ Tail Length .283		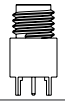		21-33833-171†				
Differential Twinax Receptacle 90 degree Adapter (low profile) with cable to board/ Tensolite 24463/9P026X-2	Wired to board	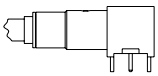		21-33833-91 (L-2119-AF)	100	N/A	M22520/2-01 with Positioner M22520/2-34	M22520/5-01 with Die Set M22520/5-45 (Location A)
Differential Twinax Receptacle 90 degree Adapter with cable to board/ Tensolite 24463/9P025X-2				21-33833-51 (L-2119-V)				
Differential Twinax Receptacle 90 degree Adapter with cable to board/Tensolite 24463/9P025X-2				21-33833-141 (L-2119-BU)				

150 OHM DIFFERENTIAL TWINAX TRANSITION ADAPTERS FOR LAUNCHING CONTROLLED IMPEDANCE SIGNALS TO PC BOARDS

Differential Twinax Type Adapter/ Cable or PCB Tail Length		Illustration of Adapter	Part Number (Termination Instruction Sheet)** Plug	Part Number (Termination Instruction Sheet)** Receptacle	Impedance (Ohms)	Mating Thread Size	Crimping Tools Inner Contact	Crimping Tools Outer Contact
Differential Twinax Plug Adapter/ Tensolite 26483/03071X-2	Mating plugs and receptacles	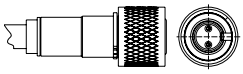	21-33832-91 (L-2119-BR)		150	.375	M22520/2-01 with Positioner M22520/2-34	M22520/5-01 with Die Set M22520/5-45 (Location A)
PCB Differential Twinax Receptacle 90 Degree Adapter/ Tail Length .110				21-33833-111			N/A	N/A
PCB Differential Twinax Receptacle Straight Adapter/ Tail Length .110		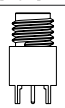		21-33833-181†			N/A	N/A
Differential Twinax Receptacle 90 degree Adapter with cable to board/ Tensolite 26483/03071X-2	Wired to board	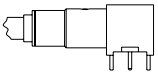		21-33833-101 (L-2119-BM)†	150	N/A	M22520/2-01 with Positioner M22520/2-34	M22520/5-01 with Die Set M22520/5-45 (Location A)

CONTACT ORDERING: Example number given in chart 21-33832-21 should be ordered as 21-033832-021; example number 21-338373-141 should be ordered as 21-033833-141. Adding Zeros is necessary for Amphenol ordering process on all contact numbers.

**Termination instructions are packaged with each contact and can be found on-line at: www.amphenol-aerospace.com/serviceinstructions.asp

† Consult Amphenol Aerospace for current release of this adapter and instruction sheet if applicable. See electrical protocols for transition adapters on page 383.

Insert Arrangements - MIL-DTL-38999, Series III
Incorporating Quadrax & Differential Twinax Contacts

Amphenol Aerospace

This illustrated listing represents the most readily available patterns incorporating quadrax and differential twinax contacts within D38999, Series III connectors. If you require other arrangements than what are shown here, consult Amphenol for further availability. In most cases, unless otherwise stated, size 8 cavities can be filled with quadrax or differential twinax contacts. Arrangements can be mixed with any size 8 coax, and/or concentric twinax or triax contacts.

Front face of pin inserts illustrated

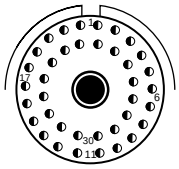

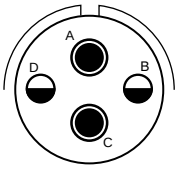

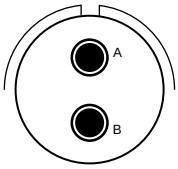

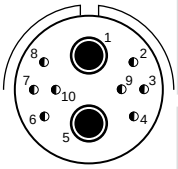

Insert Arrangement	9-5	17-2		17-22		17-52	17-60	
Number of Contacts	1	38	1	2	2	2	8	2
Contact Size	8	22D	8 Twinax	12	8	8	22D	8
	Grounded					Meets Boeing Specification		

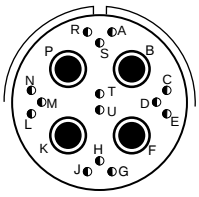

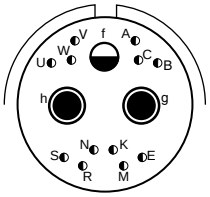

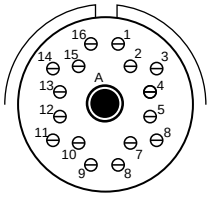

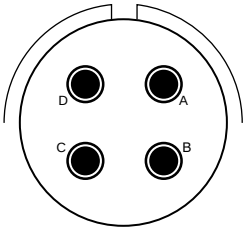

Insert Arrangement	19-18		19-31			19-AD		21-75
Number of Contacts	14	4	12	1	2	16	1	4
Contact Size	22D	8	22D	12	8	20	8	8

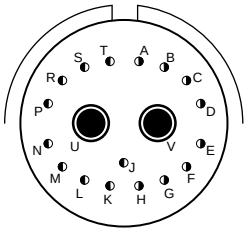

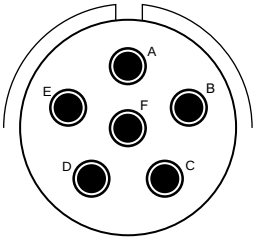

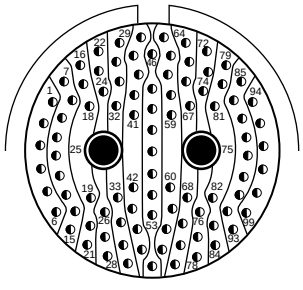

Insert Arrangement	21-79		23-6	25-7	
Number of Contacts	17	2	6	97	2
Contact Size	22D	8	8	22D	8

CONTACT LEGEND

8	10	12	16	20	22D
Quadrax or Differential Twinax					

Front face of pin inserts illustrated

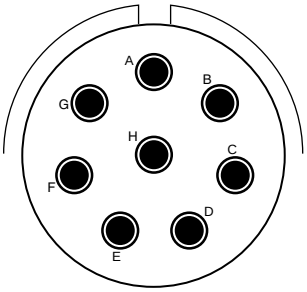

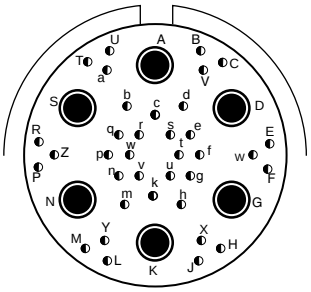

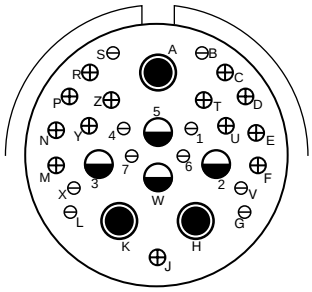

Insert Arrangement	25-8	25-17		25-20			
Number of Contacts	8	36	6	10	13	3	4
Contact Size	8	22D	8	20	16	8	12

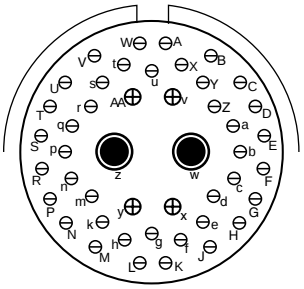

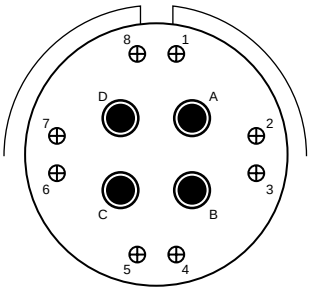

Insert Arrangement	25-46			25-62	
Number of Contacts	40	4	2	8	4
Contact Size	20	16	8	16	8
				Ground plane only	

CONTACT LEGEND

8	10	12	16	20	22D
Quadrax or Differential Twinax					

How to Order 38999, Series III Circular
With Quadrax 100 Ohm Contacts

Amphenol Aerospace

Amphenol Tri-Start, 38999 Series III* Connectors can be ordered with the following popularly used Quadrax contacts:
100 ohm quadrax 21-033385-051 socket contacts
100 ohm quadrax 21-033384-051 pin contacts
Use the following coded number ordering procedure :

1. Connector Type	2. Shell Type	3. Service Class	4. **Shell Size** – Insert Arrangement	5. Contact Type	6. Alternate Keying Position
TVP	00	RQW	21–75	P	B

For ordering of connectors with any other quadrax contacts or differential twinax contacts, please consult Amphenol Aerospace for part numbers.

Step 1. Select a Connector Type

TV	Tri-Start Series Connector with metal shells
TVP	Back panel mounted receptacle with metal shells
CTV	Tri-Start Series Connector with composite shells
CTVP	Back panel mounted receptacle with composite shells

Step 2. Select a Shell Style

00	Wall mount receptacle
02	Box mount receptacle available only with the PCB tails and epoxy backfilled (non-removable)
06	Straight plug
07	Jam nut receptacle

Step 3. Select a Service Class with Quadrax

RQF	Electroless nickel plated aluminum
RGQF	Electroless nickel plated ground plane aluminum
RQW	Olive drab cadmium plate
RGQW	Olive drab cadmium plated ground plane aluminum
RQB	NiAlBronze
RGQB	NiAlBronze ground plane
RQK	Corrosion resistance stainless steel
RGQK	Stainless steel ground plane
QDT	Durmalon plated, Nickel-PTFE alternative to cadmium
GQDT	Groundplane Durmalon

Step 4. Select a Shell Size and Insert Arrangement

See insert arrangements available with quadrax contacts on preceding pages. Shell Size and Insert Arrangements are together in one chart. First number represents Shell Size, second number is the Insert Arrangement

Step 5. Select Contact Type

P	Pin contacts
S	Socket contacts

Step 6. Select an Alternate Keying Position

Locksmith keying–rotation of minor keys. See Series III Alternate Positions below "N" not required for normal position

Tri-Start Alternate Positions

A plug with a given rotation letter will mate with a receptacle with the same rotation letter. The angles for a given connector are the same whether it contains pins or sockets. Inserts are not rotated in conjunction with the master key/keyway.

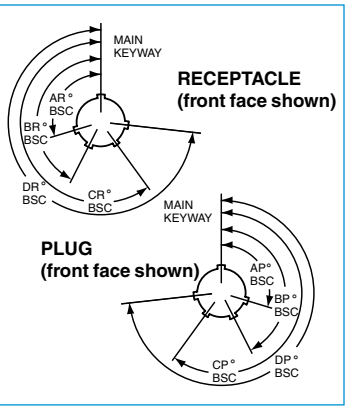

Shell Size	Key & Keyway Arrangement Identification Letter	AR° or AP° BSC	BR° or BP° BSC	CR° or CP° BSC	DR° or DP° BSC
9	N	105	140	215	265
	A	102	132	248	320
	B	80	118	230	312
	C	35	140	205	275
	D	64	155	234	304
	E	91	131	197	240
11, 13, and 15	N	95	141	208	236
	A	113	156	182	292
	B	90	145	195	252
	C	53	156	220	255
	D	119	146	176	298
	E	51	141	184	242
17 and 19	N	80	142	196	293
	A	135	170	200	310
	B	49	169	200	244
	C	66	140	200	257
	D	62	145	180	280
	E	79	153	197	272
21, 23, and 25	N	80	142	196	293
	A	135	170	200	310
	B	49	169	200	244
	C	66	140	200	257
	D	62	145	180	280
	E	79	153	197	272
25L, 33, and 37	N	80	142	188	293
	A	135	170	188	310
	B	49	169	188	244
	C	66	140	188	257
	D	62	145	188	280
	E	79	153	188	272

* The incorporation of quadrax or differential twinax contacts requires a modified connector to accommodate keyed contacts.

For more information on Tri-Start, MIL-DTL-38999 Series III connectors see the section in this catalog.

Amphenol® Coaxial Contacts -Offer several advantages for reliable interconnection and continued performance:

- Large crimping area assures low contact resistance and high tensile strength
- Back insulator positively captivates inner contact against axial loads
- Front insulator provides closed entry for socket inner contact
- Recessed inner contact is protected
- Outer contact has rugged wall section for durability

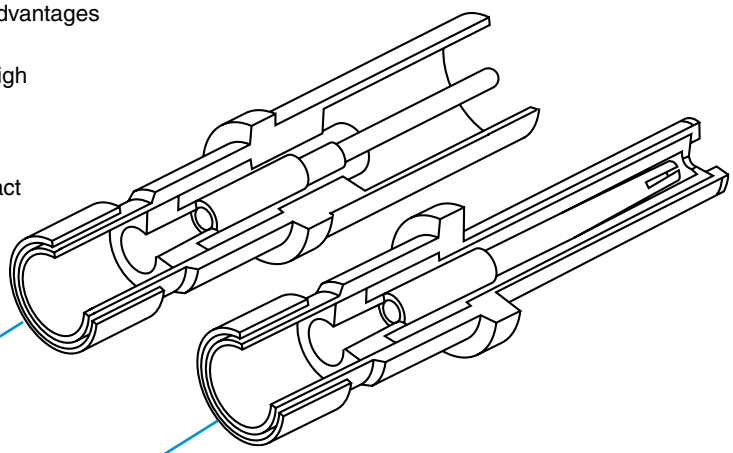

TYPICAL SUBMINIATURE COAX SOCKET CONTACT has socket outer contact with a pin inner contact

TYPICAL SUBMINIATURE COAX PIN CONTACT has pin outer contact with a socket inner contact

MIL-DTL-38999 LJT-R, JT-R, TV-R, SJT-R MS Type, Coax Size 12 Socket Assembled Contact

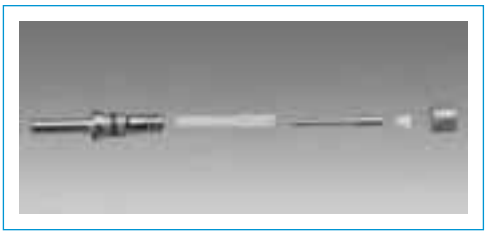

MIL-DTL-38999 LJT-R, JT-R, TV-R, SJT-R MS Type, Coax Size 16 Pin Unassembled Contact

MIL-DTL-38999 LJT-R, JT-R, TV-R, SJT-R MS Type, Coax Size 8 Pin Assembled Contact

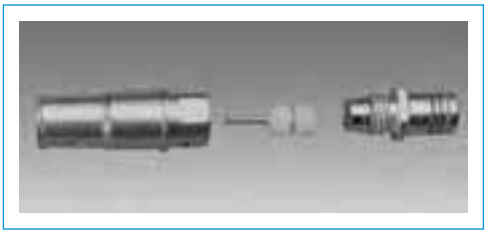

MIL-DTL-38999 LJT-R, JT-R, TV-R, SJT-R MS Type, Coax Size 8 Socket Unassembled Contact

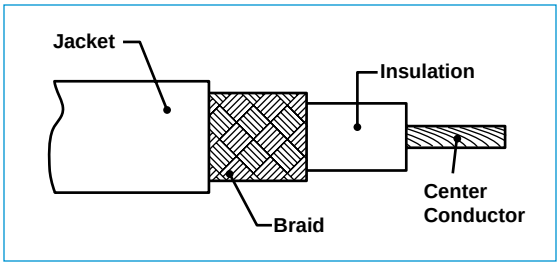

Cable Illustration - Coax Contact

Coax Contacts are gold plated, crimp termination

Finish of mating contacts parts: supplied with 0.000050 min. gold over nickel on mating parts. Other finishes are available; consult Amphenol for further information.

Coax Size 12 & 16 Contact Performance:

- Typical VSWR: 1.5:1 maximum up to 700 MHz and 500 MHz respectively, for properly cabled size 12 and 16 coaxial contacts in the M38999 Series I, II and III
- Insulation Resistance: 5,000 megohms minimum @ 25°C
- Dielectric Withstanding Voltage:
  Size 12: 1,000 VAC Rms @ sea level, 250 VAC Rms @ 50,000 ft.
  Size 16: 800 VAC Rms @ sea level, 250 VAC Rms @ 50,000 ft.
- Contact Resistance: See MIL-C-39029/27, /28, /75, /76, /77, /78

Coax Size 8 Contact Performance:

- Typical VSWR when terminated to specified 50 ohm cable:
  1.5:1 maximum up to 3 GHz (excluding 21-33101/2-27)
- Insulation Resistance: 5,000 megohms minimum @ 25°C
- Dielectric Withstanding Voltage:
  1,300 VAC Rms @ sea level, 250 VAC Rms @ 50,000 ft.
- Contact Resistance: See MIL-C-39029/59, /60

JT-R Series, MIL-DTL-38999 Series II, SAE AS39029 (27, 28, 76, 78)

COAX CONTACTS FOR USE IN JT-R CONNECTORS							
Cable	Contact Part Number (Termination Instruction Sheet)**		Contact Size	Crimping Tools		Installation Tools	
	Pin	Socket		Inner Contact	Crimp Ferrule	Insertion	Removal
RG-178B/U, RG-196A/U	21-33122-564 (M39029/76-425) (L-2035-AG)	21-33121-564 (M39029/78-433) (L-2035-AH)	16	M22520/2-01 with Positioner M22520/2-35 or with Daniels Positioner K532	M22520/4-01 with Positioner M22520/4-02	M81969/8-07 or M81969/14-03 or Amphenol 11-8674-16 11-8794-16 or MS27495A16 or MS27534-16	M81969/8-08 or M81969/14-03 or Amphenol 11-8675-16 11-8795-16 or MS27495R16 or MS27534-16
Haveg 30-00761, 30-02024, 30-02033 Tensolite 24713/A955KK1, 26723/ A955KK1	21-33122-562† (L-2035-AN)	21-33121-562† (L-2035-AP)					
Haveg 61-02051	21-33122-561† (L-2035-AK)	21-33121-561† (L-2035-AL)					
RG-174A/U, RG-188A/U, RG-161/U, RG-187A/U, RG-316/U, RG-179B/U, Haveg 8100207, Times (HS-179) AA3248, Teledyne 11299	21-33122-563 (M39029/76-424) (L-2035-AD)	21-33121-563 (M39029/78-432) (L-2035-AE)					
	21-33122-546 (M39029/28-211) (L-2035-F)	21-33121-546 (M39029/27-210) (L-2035-G)	12	M22520/2-01 with Positioner M22520/2-34 or with Daniels Positioner K323	M22520/31-01 with Positioner M22520/31-02 or Daniels GS-200 Tool with Positioner G2P330	M81969/8-09 or M81969/14-04 or Amphenol 11-8674-12 11-8794-12 or MS27495A12 or MS27534-12	M81969/8-10 or M81969/14-04 or Amphenol 11-8675-12 11-8795-12 or MS27495R12 or MS27534-12
RG-180B/U, RG-195A/U, Raychem 9528A1318	21-33122-541 (M39029/28-409) (L-2035-C)	21-33121-541 (M39029/27-402) (L-2035-E)					
Raychem 5022E5111	21-33122-543† (L-2035-M)	21-33121-543† (L-2035-N)					
Raychem 9530A5314	21-33122-544 (L-2035-R)	21-33121-544 (L-2035-S)					
Raychem 9527A1318	21-33122-545 (L-2035-U)	21-33121-545 (L-2035-V)					
Gore GWN1159A	21-33122-547† (L-2035-X)	21-33121-547† (L-2035-Y)					

MIL-DTL-38999 CONTACT DATA

All contacts mate with other contacts in this series which have the same inner and outer contact diameters.

CONTACT ORDERING: Example number given in chart 21-33122-564 should be ordered as 21-033122-564.
Adding Zeros is necessary for Amphenol ordering process on all contact numbers
† Consult Amphenol Aerospace for current release of this contact or instruction sheet if applicable.

NOTE: SAE AS39029 supersedes MIL-C-39029
**Termination instructions are packaged with each contact and can be found on-line at:
www.amphenol-aerospace.com/serviceinstructions.asp

JT Example:	Socket 21-33121-564 on RG-196A/U cable will mate with pin 21-33122-563 on RG-188A/U cable which is used in both this and the LJT-R series.
LJT, TV, SJT, Amphe-Lite Example:	Socket 21-33123-564 on RG-196A/U cable will mate with pin 21-33122-563 on RG-188A/Ucable which is used in both this and the JT-R series.

Finish of mating contact parts: Contact part numbers shown in the chart above are supplied with 0.000050 min. gold (Knoop hardness 130-200) over nickel on mating parts. Other finishes are available; consult Amphenol.

Daniels crimping tools are available from:
Daniels Mfg. Corp. 6103 Anno Ave., Orlando FL 32809

LJT-R, MIL-DTL-38999 Series I; TV-R, MIL-DTL-38999 Series III; Amphe-Lite and SJT-R Series, SAE AS39029 (28, 59, 60, 75, 76, 77)

COAX CONTACTS FOR USE IN LJT-R, TV-R, AMPHE-LITE AND SJT-R CONNECTORS

Cable	Contact Part Number		Contact Size	Crimping Tools		Installation Tools	
	Pin	Socket		Inner Contact	Crimp Ferrule	Insertion	Removal
RG-178B/U, RG-196A/U	21-33122-564 (M39029/76-425) (L-2035-AG)	21-33123-564 (M39029/77-429) (L-2035-AJ	16	M22520/2-01 with Positioner M22520/2-35 or with Daniels Positioner K532	M22520/4-01 with Positioner M22520/4-02	M81969/8-07 or M81969/14-03 or Amphenol 11-8674-16 11-8794-16 or MS27495A16 or MS27534-16	M81969/8-08 or M81969/14-03 or Amphenol 11-8675-16 11-8795-16 or MS27495R16 or MS27534-16
Haveg 30-00761, 30-02024, 30-02033 Tensolite 24713/A955KK1, 26723/A955KK1	21-33122-562† (L-2035-AN)	21-33123-562† (L-2035-AR)†					
Haveg 61-02051	21-33122-561† (L-2035-AK) †	21-33123-561† (L-2035-AM) †					
RG-174A/U, RG-188A/U, RG-316/U, RG-161/U RG-187A/U, RG-179B/U, Haveg 8100207, Times (HS-179) AA3248, Teledyne 11299	21-33122-563 (M39029/76-424) (L-2035-AD)	21-33123-563 (M39029/77-428) (L-2035-AF)					
	21-33122-546 (M39029/28-211) (L-2035-F)	21-33123-546 (M39029/75-416) (L-2035-H)	12	M22520/2-01 with Positioner M22520/2-34 or with Daniels Positioner K323	M22520/31-01 with Positioner M22520/31-02 or Daniels GS-200 Tool with Positioner G2P330	M81969/8-09 or M81969/14-04 or Amphenol 11-8674-12 11-8794-12 or MS27495A12 or MS27534-12	M81969/8-10 or M81969/14-04 or Amphenol 11-8675-12 11-8795-12 or MS27495R12 or MS27534-12
RG-180B/U, RG-195A/U, Raychem 9528A1318	21-33122-541 (M39029/28-409) (L-2035-C)	21-33123-541 (M39029/75-417) (L-2035-D)					
Raychem 5022E5111	21-33122-543† (L-2035-M) †	21-33123-543† (L-2035-P)					
Raychem 9530A5314	21-33122-544† (L-2035R)	21-33123-544† (L-2035-T) †					
Raychem 9527A1318	21-33122-545† (L-2035-U) †	21-33123-545† (L-2035-W)					
Raychem 9527A1314	21-33122-585 (L-2035-GG)	21-33123-585 (L-2035-GH)					
Gore GWN1159A, Nexans RG179-DT	21-33122-547 (L-2035-X) †	21-33123-547 (L-2035-Z) †					
M/A-Com 5M2869-001	21-33122-589 (L-2035-GR)	21-33123-589 (L-2035-GT)					
RG-187A/U, RG-179B/U, RG-174A/U, RG-188A/U, RG-316/U, RG-161/U Haveg 8100207, Times (HS-179)AA3248, Teledyne 11299	21-33102-23† (L-1107-C)	21-33101-23† (L-1107-G)	8	M22520/2-01 with Positioner M22520/2-31†† or solder	M22520/5-01 with die set M22520/5-03 (A) or M22520/5-08 (A) M22520/5-35 (B) or M22520/10-01 with Die Set M22520/10-05 (A)	Hand inserted	11-9170 or MS
RG-142B/U, RG-223/U	21-33102-24* (L-1107-D)	21-33101-24* (L-1107-H)			M22520/5-01 with die set M22520/5-05 (A) or M22520/5-19 (B) or M22520/10-01 with Die Set M22520/10-07 (A)		

NOTE: SAE AS39029 supersedes MIL-C-39029
CRIMPING TOOLS: Italicized letters in parenthesis that follow positioner part numbers indicate applicable die closure. Commercial equivalents with the same die closure dimension may be used.
CHART CONTINUES ON NEXT PAGE

CONTACT ORDERING: Example number given in chart 21-33122-564 should be ordered as 21-033122-564; example number 21-33102-23 should be ordered as 21-033102-023. Adding Zeros is necessary for Amphenol ordering process on all contact numbers
† Consult Amphenol Aerospace for current release of this contact or instruction sheet if applicable.
†† When inner contact is installed by crimping only. 11-10134 Expander Tool Kit must be used to assemble rear insulator over contact.
**Termination instructions are packaged with each contact and can be found on-line at: www.amphenol-aerospace.com/serviceinstructions.asp

LJT-R, MIL-DTL-38999 Series I; TV-R, MIL-DTL-38999 Series III; Amphe-Lite and SJT-R Series, SAE AS39029 (28, 59, 60, 75, 76, 77), cont.

COAX CONTACTS FOR USE IN LJT-R, TV-R, AMPHE-LITE AND SJT-R CONNECTORS, CONT.

Cable	Contact Part Number (Termination Instruction Sheet)***		Contact Size	Crimping Tools		Installation Tools	
	Pin	Socket		Inner Contact	Crimp Ferrule	Insertion	Removal
Haveg 51-03111, Tensolite 28895/2X1	21-33102-22 (L-1107-B)	21-33101-22 (L-1107-F)	8	M22520/2-01 with Positioner M22520/2-31** or solder	M22520/5-01 with die set M22520/5-05 (B) or M22520/5-41 (B) or M22520/10-01 with Die Set M22520/10-07 (B)	Hand inserted	11-9170 or MS
RG-180B/U, RG-195A/U, Raychem 9528A1318	21-33102-21 (M39029/60-367 Supersedes MS27536) (L-1107-A)	21-33101-21 (M39029/59-366 Supersedes MS27535) (L-1107-E)					
RD-316 Double Shield (M17/152-00001)	21-33102-25 (L-1107-J)	21-33101-25 (L-1107-N)		M22520/2-01 with Positioner M22520/2-31	M22520/5-01 with Die Set M22520/5-37 (B) or M22520/10-01 with Die Set M22520/10-15 (A)		
Raychem 7524D5111-9 (triax cable - contact will terminate inner coax portion only)	21-33102-26 (L-1107-M)	21-33101-26 (L-1107-M)					
RG-400, ECS3C058A ECS352001	21-33102-27 (L-1286-B)	21-33101-27 (L-1293-B)		M22520/2-01 with Positioner M22520/2-10	M22520/5-01 with Die Set M22520/5-45 (A)		
RG-58 (M17/155-00001), M17/028-RG-058	21-33102-29 (L-1107-AA)	21-33101-29 (L-1107-Y)†		Solder	M22520/5-01 with Die Set M22520/5-05 (B)		
5021D1331-0	21-33102-36 (L-1107-P)	21-33101-36† (L-1107-Q)		M22520/2-01 with Positioner M22520/2-31	M22520/5-01 with Die Set M22520/5-05 (B) or M22520/10-01 with Die Set M22520/10-07 (B)		
5M2869-001 ESC432101	21-33102-37 (L-1107-V)	21-33101-37 (L-1107-W)					
5022A1311-0	21-33102-39 (L-1107-AC)	21-33101-36† (L-1107-AB)					
FA-19X	21-33652-1 (L-2091-A)	21-033653-1 (L-2091-B)		M22520/2-01 with Positioner K1106	M22520/5-01 with Die Set Y25 (B)		
T Flex-402	21-33102-41 (L-1107-AG)	21-33101-41 (L-1107-AF)		Solder	M22520/5-01 with Die Set M22520/5-05 (B)		

NOTE: SAE AS39029 supersedes MIL-C-39029
NOTE: Contacts can be ordered by part numbers given in chart
CRIMPING TOOLS: Italicized letters in parenthesis that follow positioner part numbers indicate applicable die closure. Commercial equivalents with the same die closure dimension may be used.

CONTACT ORDERING: Example number given in chart 21-33102-22 should be ordered as 21-033102-022; example number 21-33652-1 should be ordered as 21-033652-001. Adding Zeros is necessary for Amphenol ordering process on all contact numbers.
† Consult Amphenol Aerospace for current release of this contact or instruction sheet if applicable
**When inner contact is installed by crimping only. 11-10134 Expander Tool Kit must be used to assemble rear insulator over contact.
***Termination instructions are packaged with each contact and can be found on-line at: www.amphenol-aerospace.com/serviceinstructions.asp

Amphenol® Matched Impedance Size 12 Coaxial Contacts for RF/Microwave, High Frequency and High Performance Requirements

The matched impedance coax contact is available in size 12. It incorporates a captivated inner contact which "snaps into" the outer contact preventing displacement or pull back of the inner contact in situations where the cable may be bent.

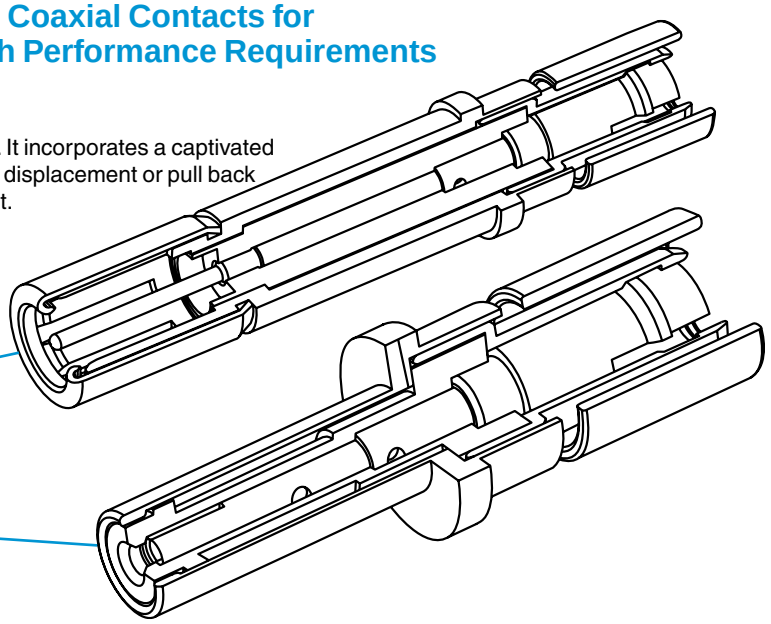

TYPICAL MATCHED IMPEDANCE COAX SOCKET CONTACT has socket outer contact with a captivated pin inner contact

TYPICAL MATCHED IMPEDANCE COAX PIN CONTACT has pin outer contact with a captivated socket inner contact

Design features and benefits of the Matched Impedance:

- For use in 90 degree angle or bent cable applications
- Provides 50 ohm matched impedance resulting in low VSWR and low insertion loss
- Frequency range for a mated pair extends to 3 GHz and beyond, higher than other coaxial contacts previously offered.
- Ideally suited for D38999 high performance and MIL-STD-1760 high band coaxial contact requirements

High Performance Size 12 Coax 50 Ohm matched

LJT-R, MIL-DTL-38999 Series I, JT-R, MIL-DTL-38999 Series II, and TV-R, MIL-DTL-38999 Series III

Use with Cable	Comment	Pin (Termination Instruction Sheet)***	Socket (Termination Instruction Sheet)***
RG316, T-Flex-405	M39029/102/103	21-33651-11 (L-2092-C)	21-33650-11 (L-2092-C)
RG-316, T-Flex-405	JT-R, MIL-DTL-38999 Series II		21-33729-11 (L-2092-P)
RD316, Filotex, ET124962, M17/152-00001	M39029/102/103 Type	21-33651-17 (L-2092-F)	21-33650-17 (L-2092-F)
JN1088WT	JN1104*50C	21-33213-42	21-33214-42 (L-2092-D)
PAN6422XQ	PAN6841*50C	21-33651-12 (L-2092-E)	21-33650-12
RG178, Gore CXN 3403	M39029/102/103 Type	21-33651-18 (L-2092-K)	21-33650-18 (L-2092-K)
RG178, Gore CXN 3403	JT-R, MIL-DTL-38999 Series II		21-33729-18 (L-2092-K)
SFT-316-TR	M39029/102/103 Type	21-33651-22 (L-2092-N)	21-33650-22 (L-2092-N)
Semflex SW060	M39029/102/103 Type	21-33651-25	21-33650-25
Semflex SW086 (solid inner conductor)	M39029/102/103 Type	21-33651-26	21-33650-26

* Add P or S for pin or socket
CONTACT ORDERING: Example number given in chart 21-33651-11 should be ordered as 21-033651-011. Adding Zeros is necessary for Amphenol ordering process on all contact numbers.
***Termination instructions are packaged with each contact and can be found on-line at: www.amphenol-aerospace.com/serviceinstructions.asp

Matched Impedance Coax Contact Performance:

Electrical Specifications:

- Contact impedance = 50 ohms nominal
- Frequency range = 0–3 GHz Operable at higher frequencies depending on cable selection. Consult Amphenol for details.
- Dielectric withstanding voltage (for a mated pair):
  At sea level = 1000 VRMS
  At 50, 000 ft. = 250 VRMS
- Insulation resistance: 5 gigaohms min. @ 25°C
- VSWR: 1.20 + .04F (F in GHz) max. up to 3 GHz
- Insertion Loss: $.11\sqrt{fGHz\ dB\ max.}$

Environmental Specifications:

- Thermal limits: –55 ° to 200°C

Mechanical Specifications:

- Mating: slide-on
- Mounting: conforms to M39029/102 & /103 envelope dimensions

Typical Contact Installation Instructions
for Coax Contacts

The following is an example of a contact instruction sheet that would be shipped within the package of contacts for a Crimp, Size 12 Coax Contact for use in Subminiature, D38999 connectors. The sheet provides detailed instructions for assembling the component parts and for crimping the contact to coaxial cable, along with the recommended cable and tooling to be used. Installation instructions are included within all contacts for D38999 connectors. For installation instructions for other connector series, there are separate documents (not included in packaging of parts) as follows: L- 633 for Miniature solder types, L-613 for Miniature SE types, L-660 for Miniature CE types, and L-650 for MS/Standard and Heavy Duty types. For any other instructions needed, consult Amphenol. Most installation instructions can be found on-line at www.amphenol-aerospace.com (from home page, go to Service Instructions and enter contact part number or instruction sheet number).

21-33651-11 (PIN)
21-33650-11 (SOCKET)

Contact, Pin and Socket, Coaxial,
Type LJT-R & TV-R, (MIL-DTL-38999 Series I & III) Crimp, Size 12
Installation Instructions

See table on reverse side for coaxial cable recommended and crimp tool information.

A. 1. Slide outer crimp ferrule over cable outer jacket as shown.
2. Strip cable outer braid as illustrated. Ends must be cut cleanly and at right angles to the axial plane of the cable. The cable must not be deformed while making cuts.
3. Flare outer braid, then strip cable dielectric as shown.

B. 1. Assemble inner contact assembly over cable center conductor and cable dielectric until inside bore of bushing butts against cable dielectric.
2. Cable center conductor must be visible through the inspection hole in the inner contact wire well.
3. Crimp inner contact wire well using crimp tool listed in table.

C. 1. Carefully slide outer contact assembly over inner contact assembly and under cable outer braid until inner contact butts against insulator shoulder as illustrated. (Inner contact assembly will snap into the locked position when fully assembled inside the outer contact assembly.)
2. Bring outer crimp ferrule forward over cable outer braid as illustrated. (Continue to push the inner contact assembly fully forward while bringing the outer crimp ferrule into position.)
3. Crimp outer crimp ferrule using crimp tool listed in table (.156 Max. over ferrule after crimping). Trim excess braid ahead of crimp ferrule, if necessary.

CONTACT INSERTION INTO CONNECTOR

Using insertion tool (part number M81969/8-09 or M81969/14-04), insert contact assembly into rear connector grommet hole. Contact must be aligned with hole and not inserted at an angle. Push forward until contact is felt to snap into position within insert. Remove tool.

CONTACT REMOVAL FROM CONNECTOR

Position removal tool (part number M81969/8-10 or M81969/14-04) around cable and slide tool down wire until tool tips enter rear grommet and come to a positive stop. Hold tool tip firmly against positive stop on contact, grip wire and simultaneously remove tool, contact and cable.

21-33651-11 (PIN)
21-33650-11 (SOCKET)

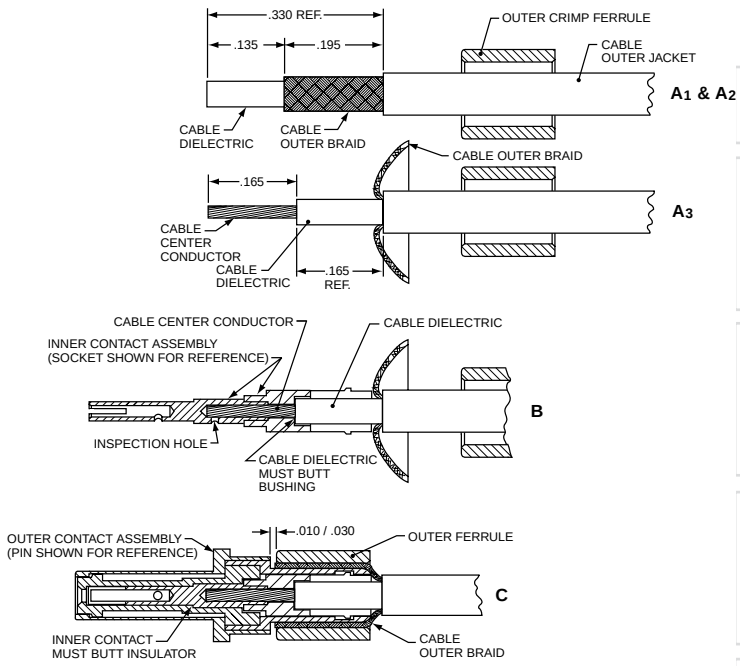

L-2092-C
October 2001

FSCM77820

Amphenol ® Part Number	Description	Coaxial Cable Accommodated	Tools				
			Inner Contact			Outer Contact	
			Crimp Tool	Setting	Positioner (Daniels)	Tool	Positioner
21-33651-11	Matched Impedance* Size 12 Coax Pin	RG316 (M17/113-RG316)	MH992 (Daniels)	5	K1360	M22520/5-01	M22520/5-03 (A) or M22520/5-35 (B)
		RG179 (M17/094-RG179)	MH992 (Daniels)	4	K1360		
21-33650-11	Matched Impedance* Size 12 Coax Socket	RG316 (M17/113-RG316)	MH992 (Daniels)	5	K1360		
		RG179 (M17/094-RG179)	MH992 (Daniels)	4	K1360		

* Matched Impedance applies when contacts are terminated to RG316 cable only.

Amphenol® High Frequency Contacts

Amphenol and SV Microwave (an Amphenol company) offer DC to 40 GHz high frequency size 8, 12 and 16 coaxial contacts for the D38999 Series III housing and standard inserts. These contacts allow any application to continue to use the D38999 connector and be able to expand the use to include the microwave transmission lines. Features include:

- Superior electrical performance and high frequency capability
- Blindmate advantage and maintance of an accurate phase length when mated
- Can be terminated to a multiple of cable types depending on the application
- Uses standard interfaces based on MIL-STD-348, and can be installed in any MIL-DTL-38999 size 8, 12 or 16 insert
- Unique "Float Mount" technology allows for consistent microwave performance while maintaining tight mechanical tolerances

Subminiature MIL-DTL-38999 Series III
Connector with Size 8 High Frequency Contacts

HIGH FREQUENCY CONTACTS

SPECIFICATIONS

Electrical
(Mated pair size 8 - RG 405 Semi-Rigid Cable)

Impedance	50 Ω
Frequency Range	DC - 40 GHz
VSWR	1.05 +.01 (freq. GHz)
Insertion Loss	0.03.√(freq. GHz)
Insulation Resistance (Min.)	10,000 M Ω
Contact Resistance (Max.)	
Center conductor:	6.0 mΩ
outer conductor:	3.0 mΩ
outer to cable:	0.5 mΩ
Dielectric Withstanding Voltage	1,000 VRMS
Corona Extinction Voltage	250 VRMS
RF High Potential Voltage	500 VRMS
RF Leakage	- (80-freq. GHz)

Materials and Finish

Body and Sleeve	Stainless steel per AMS-5640 Alloy UNS S30300 Type 1
Ferrule	Brass per ASTM B16, Alloy UNS C36000
Contact & Lock Ring	Beryllium copper per ASTM B196 Alloy UNS C17300, Td04
Insulator	PTFE per ASTM D1710, Type 1, Grade 1, Class B
Spring	Stainless steel per ASTM A313 Type 631
Rear Body & Contacts	Gold per ASTM B488 Type II, Code C, Class 1.27; over Nickel per AMS-QQ-N-290 Class 1 (60µ inches); over Copper per MIL-C-14550 (10µ inches) Passivated per AMS-2700, Type 2

Environmental

Temperature Range	–65°C to +125°C
Corrosion (Salt Spray)	MIL-STD-202, Method 101, Condition B
Vibration	MIL-STD-202, Method 204, Condition D, 20 Gs
Shock	MIL-STD-202, Method 213, Condition 1, 100 Gxs
Thermal Shock	MIL-STD-202, Method 107, Condition B, –65°C to +125°C
Moisture Resistance	MIL-STD-202, Method 106, Less step 7B
Barometric Pressure (Altitude)	MIL-STD-202, Method 105, Condition C, 70,000 ft.

HIGH FREQUENCY COAX CONTACTS FOR USE IN D38999, SERIES III CONNECTORS

High Frequency Amphenol Part Number (Termination Instruction Sheet)	Inter-face	Frequency	For use with Cable	Type	Cavity Size	Piggyback Grommet
21-033449-01HF (300-17-008)	BMZ	40 GHZ	TFLEX-405	Socket	8	21-033321-007
21-033448-01HF (300-17-008)				Pin		
21-033449-02HF (300-89-009)	BMZ	18 GHZ	TFLEX-405	Socket	8	21-033321-007
21-033448-02HF (300-89-009)				Pin		
21-033449-03HF (300-89-008)	BMZ	12 GHZ	RG-400/ RG-142	Socket	8	21-033321-009
21-033448-03HF (300-89-008)				Pin		
21-033449-04HF (300-89-002)	BMZ	18 GHZ	TFLEX-402	Socket	8	21-033321-010
21-033448-04HF (300-89-002)				Pin		
21-033449-06HF	BMA	26.5 GHZ	TFLEX-405	Socket	8	21-033321-007
21-033448-06HF				Pin		
21-033449-07HF	BMA	26.5 GHZ	TFLEX-402	Socket	8	21-033321-010
21-033448-07HF				Pin		
21-033449-08HF	BMZ-75 Ohm	2 GHZ	LMR-240-75	Socket	8	21-033321-008
21-033448-08HF				Pin		
21-033449-09HF	SMPM	65 GHZ	TFLEX-405	Socket	12	N/A
21-033448-09HF				Pin		
21-033449-10HF	SMPS	65 GHZ	0.047 Dia. Cable	Socket	16	N/A
21-033448-10HF				Pin		

Amphenol Aerospace

Amphenol® Twinax Contacts -Were designed for use with twinax cable in Data Bus systems. Twinax contacts provide the following benefits:

- Protection from magnetic interference
- Protection from electrostatic interference including nuclear electromagnetic pulse
- Meets parameters defined by MIL-STD-1553B
- Maintains shield integrity through a multi-pin circular connector and does not require contact polarization within the insert

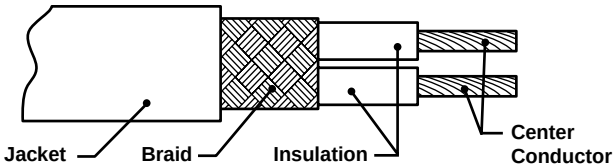

Cable Illustration - Twinax Contact

SIZE 10 & 12 CONCENTRIC TWINAX CONTACTS

The size 12 concentric twinax contact interface was developed for JN1104 EuroFighter contacts, and can be used in any size 12 cavity M38999 I, II or III or SJT connector.

Features:

- Operating temperature –55°C to 175°C
- Pins are scoop-proof
- Meets performance levels of M38999 connector
- 4 components, gold plated crimp termination
- For use with a variety of cables (See chart below)

Concentric Twinax Contacts Size 12

TYPICAL ELECTRICAL PERFORMANCE

Size 10 & 12 Concentric Twinax Contacts

Voltage Rating: 500 Vrms max. @ sea level
Contact Resistance:
Center @ 1 Amp, 55 millivolts max. voltage drop @ 25°C
Intermediate @ 1 Amp, 55 millivolts max. voltage drop @ 25°C
Outer @ 12 Amps, 85 millivolts max. voltage drop @ 25°C
Operating Frequency: 0–30 MHz
Dielectric Withstanding Voltage:
Center to Intermediate 800 VAC Rms @ Sea Level
Intermediate to Outer 500 VAC Rms @ Sea Level

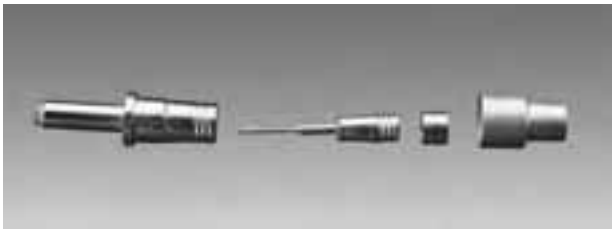

Unassembled Components of Size 12 Concentric Twinax Contact

SIZE 10 & 12 CONCENTRIC TWINAX CONTACTS FOR USE IN D38999 CONNECTORS

For use with Cable	Concentric Twinaxial Contact Part Number (Termination Instruction Sheet)**		Contact Size	Comments	Connector Series
	Pin	Socket			
M17/176-00002, ST5M1212-002	21-33909-25 (L-2092-G)	21-33908-25 (L-2092-G)	12	JN1104 Interface	D38999 Series I, III
0024A0024, Fileca F2709-13-CA	21-33909-28 (L-2092-G)	21-33908-28 (L-2092-G)			
EPD32263A,10612, GSC-12-2548-00	21-33909-29 (L-2092-H)	21-33908-29 (L-2092-H)			
ASNE0849, 5PTM1T04-1	21-33909-81 (L-2092-AB)	21-33908-81 (L-2092-AB)			
VG95218T023D002	21-33909-91 (L-2092-AC)	21-33908-91 (L-2092-AC)			
VG95218T023D002	21-33909-101 (L-2092-AC)	21-33908-101 (L-2092-AC)		Same as -91 except new ferrule with wire support	
M17/176-00002, GSC-12-2549-00		21-33640-25 (L-2092-W)	12	JN1104 Interface	D38999 Series II
0024A0024		21-33640-28 (L-2092-V)			
5M2022-003	21-33844-1 (L-1255-A)	21-33843-1 (L-1255-B)	10	Supplied with Thermal fit sleeve	D38999 Series I, III

CONTACT ORDERING: Example number given in chart above 21-33909-25 should be ordered as 21-033909-025; example number 21-33843-1 should be ordered as 21-033843-001. Adding Zeros is necessary for Amphenol ordering process on all contact numbers.

**Termination instructions are packaged with each contact and can be found on-line at: www.amphenol-aerospace.com/serviceinstructions.asp

High performance connectors within the D38999 families are the most commonly used connectors for incorporation of Twinax contacts. These connectors offer wide versatility in insert arrangements for not only concentric Twinax contacts, but also coax, triax, PCB, wire wrap, thermocouples and EMI filter contacts.
Other connectors available with concentric Twinax contacts:

- Wire Integrated Connectors (WICS) for Data Bus Systems. Consult Amphenol Aerospace, Sidney, NY.
- ARINC 404, ARINC 600 and R27 Series rectangular connectors. Supplied by Amphenol Canada.

MIL-DTL-38999 Series III Connector with Twinax Contacts and Standard Contacts

SIZE 8 CONCENTRIC TWINAX CONTACTS

The size 8 concentric Twinax contact was developed for use in MIL-STD-1553 Airborne multiplex data bus applications which require high performance interconnect characteristics in multi-pin connectors. Ideal for this application need is the high performance Tri-Start connector with its fully scoop-proof feature of recessed pins. The concentric Twinax contact is crimp terminable to twisted shielded cable. Features include:

- Provides protection from magnetic and electrostatic interference including nuclear electromagnetic pulse
- Maintains shield integrity through a multi-pin circular connector and does not require contact polarization within the insert
- 175°C rated and meets performance levels of MIL-DTL-38999 Series III connectors
- MIL-C-17/176-00002 cable termination
- Gold plated full crimp termination contacts qualified to M39029/90 & /91
- Integral part of the MIL-STD-1760 interconnection system
- Also available in modified but intermateable versions for termination to a host of cables (See chart on next page)

Concentric Twinax Contacts Size 8

TYPICAL ELECTRICAL PERFORMANCE

Size 8 Concentric Twinax Contacts

Voltage Rating: 500 Vrms max. @ sea level
Contact Resistance:
Center @ 1 Amp, 55 millivolts max. voltage drop @ 25°C
Intermediate @ 1 Amp, 55 millivolts max. voltage drop @ 25°C
Outer @ 12 Amps, 75 millivolts max. voltage drop @ 25°C
Operating Frequency: 0–20 MHz
Dielectric Withstanding Voltage:
Center to Intermediate: 1000 VAC Rms @ Sea Level
Intermediate to Outer: 500 VAC Rms @ Sea Level

Short Profile Twinax vs Standard Length Twinax Contact

SHORT PROFILE TWINAX CONTACT OPTION

A Short Profile size 8 Twinax is available that can be used with a low profile right angle backshell and can offer increased packaging efficiency. Consult Amphenol Aerospace for further information.

SIZE 8 CONCENTRIC TWINAX CONTACTS FOR USE IN D38999 CONNECTORS				
For use with Cable	Size 8 Concentric Twinaxial Contact Part Number (Termination Instruction Sheet)**		Comments	Connector Series
	Pin	Socket		
M17/176-00002, 5PTM1T04-2	21-33190-529 (L-1253-A)	21-33191-530 (L-1253-B)	M39029/90/91 (Amphenol) Supplied with heat shrink seal	D38999 Series I, III
M17/176-00002	T3-46T08-LD (PN-430)	T3-47T08-LD (PN-430)	M39029/90/91 (Pyle) Supplied with heat shrink seal	
M17/176-00002	21-33190 (L-1253-A)	21-33191 (L-1253-B)	Without seals	
M17/176-00002	21-33190-1 (L-1253-A)	21-33191-1 (L-1253-B)	Supplied with piggyback grommet seal	
Raychem 10612, 5M2022-003	21-33190-26 (L-1253-AA)	21-33191-26†	Without seals	
Raychem 10614, EPD22189B, 7724C8664, 05A0771, GC875TM24H, T10971	21-33190-22 (L-1253-C)	21-33191-22 (L-1253-D)	Without seals	
Raychem 10613, PAN711-6421, 23089/RC	21-33190-27 (L-1253-K)	21-33191-27 (L-1253-L)	Supplied with heat shrink seal	
Raychem 10613, PAN711-6421, 23089/RC	21-33190-29 (L-1253-K)	21-33191-29 (L-1253-L)	Supplied with piggyback grommet seal	
Raychem 10613, PAN711-6421, 23089/RC	21-33190-30 (L-1253-K)	21-33191-30 (L-1253-L)	Without seals	
GSC-12-2548-00, 7726D0664	21-33190-40 (L-1253-S)	21-33191-40 (L-1253-T)	Supplied with heat shrink sleeve	
Axon P517417	21-33190-81 (L-1253-W)†	21-33191-81 (L-1253-Y)†	Supplied with piggyback grommet seal	
Raychem 10612, 5M2022-003	21-33190-261 (L-1253-AA)	21-33191-261†	Supplied with piggyback grommet seal	
Raychem 10612, 5M2022-003	21-33190-262 (L-1253-AA)	21-33190-262†	Supplied with heat shrink seal	
Raychem 10614, 7724C8664	T3-46TB08-LD (PN-494)	T3-47TB08-LD (PN-494)	Without seals	
7820D0111 (20 AWG)	T3-467C08-LD (PN-537)	T3-47TC08-LD (PN-537)	Without seals	
Gore CXN2268	T3-46TE08-LD (PN-1001)	T3-47TE08-LD (PN-1001)	Short profile Supplied with heat shrink seal (.450)	
M17/176-00002	T3-46TD08-LD (PN-1000)	T3-47TD08-LD (PN-1000)	Short profile Supplied with heat shrink seal (.450)	
M17/176-00002	21-33910-15† (PN-1005)	21-33922-15 (PN-1005)	Short profile Without seals (.263)	
M17/176-00002	21-33617-1 (REF PN-100)		Short profile Supplied with piggyback grommet seal (.450)	
Gore CNX2702	T3-46TF08-LD (PN-1002)	T3-47TF08-LD (PN-1002)	Short profile Supplied with heat shrink seal (.450)	
M17/176-00002		P-209546-27†	Short profile Without seals (.303)	
S280W502-1, Fileca F2709-13-CA, HS5930, Raychem 10602 0024G0024, 0024A0024	21-33190-70 (L-1253-U)	21-33191-70 (L-1253-V)	Without seals	
S280W502-1, Fileca F2709-13-CA, HS5930, Raychem 10602 0024G0024, 0024A0024	21-33190-71 (L-1253-U)	21-33191-71 (L-1253-V)	Supplied with piggyback grommet seal	
S280W502-1, Fileca F2709-13-CA, HS5930, Raychem 10602 0024G0024, 0024A0024	21-33190-72 (L-1253-U)	21-33191-72 (L-1253-V)	Supplied with heat shrink seal	
0024A0311, PIC E10244	21-33190-90†	21-33191-90 (L-1253-AD)	Without seals	
0024A0311, PIC E1024	21-33190-91†	21-33191-91 (L-1253-AD)	Supplied with piggyback grommet seal	
0024A0311, PIC E1024	21-33190-92†	21-33191-92 (L-1253-AD)	Supplied with heat shrink seal	
M17/176-00002	21-33190-625 (L-1253-AG)	21-33191-628 (L-1253-AG)	M39029/113-625 & /114-628 Supplied with heat shrink seal	

CONTACT ORDERING: Example number given in chart above 21-33190-529 should be ordered as 21-033190-529; example number 21-33190-1 should be ordered as 21-033190-001. Adding Zeros is necessary for Amphenol ordering process on all contact numbers.

**Termination instructions are packaged with each contact and can be found on-line at: www.amphenol-aerospace.com/serviceinstructions.asp

† Consult Amphenol Aerospace for current release of this contact or instruction sheet if applicable.

Amphenol® Triax Contacts -Provide additional shielding when terminated to triax cable having solid or stranded center conductors. Amphenol supplies triax contacts in sizes 8, 10 and 12 and they are ideally suited for use in D38999 Series I, II and III circular connectors.

Features and benefits of Amphenol triax contacts include:

- Incorporates three conductors, designed for use with triax cable
- Each of the three conductors are separated by dielectric insulation to isolate ground planes
- Shielding effectiveness is improved with two isolated shields
- May be specified for direct connection to printed circuit boards
- May be mixed with coax, twinax and power contacts in a single connector

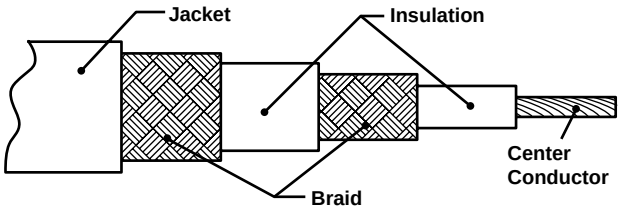

Cable Illustration - Triax Contact

Triax Size 8 Pin Contact

Triax Size 12 Socket Contact

TYPICAL ELECTRICAL PERFORMANCE

Size 8, 10 and 12 Triax Contacts

Center @ 1 Amp, 120 millivolts max. voltage drop @ 25°C
Intermediate @ 1 Amp, 60 millivolts max. voltage drop @ 25°C
Outer @ 12 Amps, 90 millivolts max. voltage drop @ 25°C

Operating Frequency:
Size 12: 0-30 MHz
Size 10: 0-300 MHz
Size 8: 0-500 MHz

Dielectric Withstanding Voltage:
Center to Intermediate 800 VAC Rms @ Sea Level
Intermediate to Outer 500 VAC Rms @ Sea Level

Insulation Resistance:
1000 megohms minimum @ 25°C

SIZE 8, 10 & 12 TRIAX CONTACTS FOR USE IN D38999 SERIES I & III CONNECTORS

For use with Cable	Size	Size 8, 10, 12 Triax Contact Part Number (Termination Instruction Sheet)**		Comments
		Pin	Socket	
5M2397-002, 81264-02, RGX-179, RT-179, Champlain 81-00321A, Tensolite 28883/02060X-1(LD), 7528A5314, Thermatics 12447, 28883/02060X-1	8	21-33198-3 (L-1254-F)	21-33197-3 (L-1254-E)	
752866314, 7528G6314	8	21-33198-11 (L-1254-V)	21-33197-11 (L-1254-T)	
5M2559-001, 81264-01, Tensolite 28598/9J063T-1, Teledyne 13809, Cheminax 9530F5214	8	21-33198-4 (L-1254-D)	21-33197-4 (L-1254-C)	
ST5M1323-001, Champlain 81-00700, Teledyne 11914/1, Times AA6603, Tensolite 26895/90334X-1	8	21-33198-10 (L-1254-S)	21-33197-10 (L-1254-S)	
5M2397-002	10	21-33800-1 (L-1256-A)	21-33801-1 (L-1256-B)	
JN1088WU (75Ω), JN1088WT (50Ω)	12	21-33909-12 (L-1256-J)	21-33908-12 (L-1256-J)	JN1104 Interface
GSC-03-81497-00 (75Ω)	12	21-33909-23 (L-1256-M)	21-33908-23 (L-1256-M)	Replaced by -33 with improved rear insulator
GSC-03-81497-00 (75Ω)	12	21-33909-33 (L-1256-P)	21-33908-33 (L-1256-P)	JN1104 Interface
Harbour TRX179, Times Microwave AA-6151 (RT-179), Axon RGX-179, 540-1050-000 (75Ω)	12	21-33909-71 (L-1256-AA)	21-33908-71 (L-1256-AA)	
10602 (Twinax)	8	21-33724-15 (L-1255-C)	(Consult with Amphenol for availability)	Special design with triax mating end and twinax cable termination

CONTACT ORDERING: Example number given in chart 21-33198-3 should be ordered as 21-033198-003; example number given in chart 21-33198-10 should be ordered as 21-033198-010. Adding Zeros is necessary for Amphenol ordering process on all contact numbers.

**Termination instructions are packaged with each contact and can be found on-line at: www.amphenol-aerospace.com/serviceinstructions.asp

Amphenol® Printed Circuit Tail Contacts

are currently supplied as follows:

- 8, 12 and 16 Coax
- 8, 10 and 12 Twinax
- 8 Triax (socket only)

PC Tail shielded contacts provide a cost effective packaging solution for limited space applications where connectors are attached to printed circuit boards. High reliability is assured with factory pre-assembled contacts and standardization termination to the board. PC Tail contacts are available for MIL-DTL-38999 Series I and III circular connectors and also for ARINC 404, ARINC 600 and R27 rectangular connectors. The following pages (402 & 403) show the available PC Tail contact part numbers for 38999 Circular connectors. See page 412 Rectangular Section of this catalog for information on twinax contacts for ARINC Rectangular connectors along with compatible cable terminations. Consult Amphenol Aerospace for further information on the applicable tooling for these contacts.

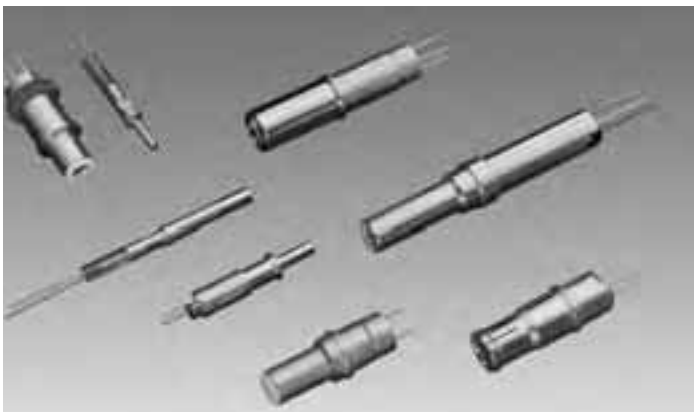

PC Tail Coax and Twinax Contacts for Attachment to Printed Circuit Boards

TYPICAL ELECTRICAL PERFORMANCE

Size 8, 12 & 16 PC Tail Coax Contacts

Contact Resistance:
Center @ 1 Amp, 55 millivolts max. voltage drop @ 25°C
Outer @ 1 Amp, 55 millivolts max. voltage drop @ 25°C
Operating Frequency: 0–500 MHz
Dielectric Withstanding Voltage:
Center to Outer 500 VAC Rms @ Sea Level
Insulation Resistance
1,000 megohms minimum @ 25°C

Size 8, PC Tail Twinax Socket Contact for use in D38999 Connectors

TYPICAL ELECTRICAL PERFORMANCE

Size 8, 10 & 12 PC Tail Twinax Contacts

Contact Resistance:
Center @ 1 Amp, 55 millivolts max. voltage drop @ 25°C
Intermediate @ 1 Amp, 55 millivolts max. voltage drop @ 25°C
Outer @ 1 Amp, 55 millivolts max. voltage drop @ 25°C
Operating Frequency: 0–20 MHz
Dielectric Withstanding Voltage:
Center to Intermediate 500 VAC Rms @ Sea Level
Intermediate to Outer 500 VAC Rms @ Sea Level
Insulation Resistance
1,000 megohms minimum @ 25°C

TYPICAL ELECTRICAL PERFORMANCE

Size 8 PC Tail Triax Contacts

Contact Resistance:
Center @ 1 Amp, 55 millivolts max. voltage drop @ 25°C
Intermediate @ 1 Amp, 55 millivolts max. voltage drop @ 25°C
Outer @ 1 Amp, 55 millivolts max. voltage drop @ 25°C
Operating Frequency: 0–500 MHz
Dielectric Withstanding Voltage:
Center to Intermediate 500 VAC Rms @ Sea Level
Intermediate to Outer 500 VAC Rms @ Sea Level
Insulation Resistance
1,000 megohms minimum @ 25°C

D38999 Connector with PC Tail Coax Contacts, Sealing Plugs in unused contact cavities and PC Tail Alignment Disc

PC TAIL COAX, TWINAX, AND TRIAX CONTACTS FOR USE IN D38999 SERIES I & III CONNECTORS					
Size	**PC Tail Coax Contact Part Number**	**PC Tail Twinax Contact Part Number**	**PC Tail Triax Contact Part Number**	**Tails***	**Comments**
8 Pin	21-33733-7			PCB 2 tails	
8 Pin	21-33733-2			PCB 2 tails	For epoxy filled connector
8 Pin	21-33733-4			PCB 2 tails	For epoxy filled connector
8 Pin	21-33733-5			PCB 4 outer tails, 1 inner	
8 Pin	21-33733-9			PCB 2 tails	
8 Pin	21-33733-8			PCB 2 tails	
8 Socket	21-33426-1			PCB 2 tails	
8 Pin		21-33967-115		PCB 3 tails	M39029/90/91 Interface
8 Pin		21-33967-125		PCB 3 tails	
8 Pin		21-33967-15		PCB 3 tails	
8 Pin		21-33967-45		PCB 3 tails	
8 Pin		21-33967-55		PCB 3 tails	
8 Pin		21-33967-65		PCB 3 tails	
8 Pin		21-33967-85		PCB 3 tails	
8 Pin		21-33967-95		PCB 3 tails	
8 Pin		P-209550†		PCB 3 tails	
8 Pin		P-209532-1		PCB 9 tails	
8 Pin		P-209532-2		PCB 9 tails	
8 Socket		21-33921-15		PCB 3 tails	
8 Socket		21-33921-45		PCB 3 tails	
8 Socket		21-33921-35		PCB 3 tails	
8 Socket		21-33921-65		PCB 3 tails	
8 Socket		21-33921-75		PCB 3 tails	
8 Socket		21-33921-115†		PCB 3 tails	
8 Socket		21-33921-105†		PCB 3 tails	M39029/90/91 Interface .040 dia. tails
8 Socket		DB-109002		PCB 2 tails	M39029/91 Interface Outer body grounded to shell
8 Socket		21-33919-15		PCB 2 tails	
8 Socket		21-33919-25		PCB 2 tails	
8 Pin			21-33828-1	PCB 3 tails	
8 Pin			21-33828-21	PCB 3 tails	
8 Pin			21-33828-41	PCB 3 tails	
8 Socket			21-33840-1	PCB 3 tails	
8 Socket			21-33840-21	PCB 2 tails	Outer body grounded to shell
8 Socket			21-33841-1	PCB 2 tails	Outer body grounded to shell
10 Pin		21-33844-2†		PCB 2 tails	Outer body grounded to shell
12 Socket					

* Consult Amphenol Aerospace for tail configurations and tail diameters.
† Consult Amphenol Aerospace for current release of this contact.

CONTACT ORDERING: Example number given in chart 21-33733-7 should be ordered as 21-033733-007; example number given in chart 21-33967-115 should be ordered as 21-033967-115; example number given in chart 21-33840-21 should be ordered as 21-033840-021. Adding Zeros is necessary for Amphenol ordering process on all contact numbers.

PC TAIL COAX, TWINAX, AND TRIAX CONTACTS FOR USE IN D38999 SERIES I & III CONNECTORS					
Size	PC Tail Coax Contact Part Number	PC Tail Twinax Contact Part Number	PC Tail Triax Contact Part Number	Tails*	Comments
12 Pin	21-33686-8			PCB 2 tails	
12 Pin	21-33686-9			PCB 2 tails	Outer tail clip type
12 Pin	21-33686-5			PCB 2 tails	
12 Pin	21-33686-10			PCB 2 tails	
12 Pin	21-33686-13			PCB 2 tails	Outer tail clip type
12 Pin	21-33687-6			PCB 2 tails	For epoxy filled connector
12 Pin	21-33687-7			PCB 2 tails	
12 Pin	21-33686-16†			PCB 2 tails	
12 Socket	21-33614-1			PCB 2 tails	
12 Socket	21-33614-21			PCB 2 tails	
12 Socket	21-33614-41			PCB 2 tails	
12 Socket	21-33611-3			PCB 2 tails	Outer tail clip type
12 Socket	21-33440-1			PCB 3 tails	
12 Socket	21-33430-1			PCB 2 tails	Outer tail clip type, M38999 Series II
12 Socket	21-33430-21			PCB 2 tails	M38999 Series II
12 Socket	21-33430-41				M38999 Series II
12 Pin		21-33633-1†**		PCB 4 tails	JN1104 Interface
12 Pin		21-33633-2**		PCB 4 tails	
12 Pin		21-33633-6**		PCB 4 tails	
12 Pin		21-33633-7**		PCB 4 tails	
12 Socket		21-33393-6**		PCB 4 tails	
12 Socket		21-33393-5**		PCB 4 tails	
12 Socket		21-33433-1**		PCB 4 tails	M38999 Series II, JN1104 Interface
16 Pin	21-33856-15			PCB 2 tails	
16 Pin	21-33856-25			PCB 90 degree, 2 tails	
16 Pin	21-33856-65			PCB 2 tails	
16 Pin	21-33634-15			PCB 1 tail	Outer body grounded to shell
16 Pin	21-33634-35			PCB 1 tail	Outer body grounded to shell
16 Pin	21-33634-45			PCB 1 tail	
16 Pin	21-33386-1			PCB 2 tails	
16 Socket	21-33857-1			PCB 2 tails	
16 Socket	21-33857-8			PCB 2 tails	
16 Socket	21-33857-7			PCB 2 tails	
16 Socket	21-33610-1			PCB 2 tails	
16 Socket	21-33610-2			PCB 2 tails	
16 Socket	21-33441-1			PCB 2 tails	
16 Socket	21-33606-1			PCB 2 tails	M38999 Series II
16 Socket	21-33606-21†			PCB 2 tails	
16 Socket	21-33606-31†			PCB 2 tails	
16 Socket	21-33610-3			PCB 2 tails	
16 Socket	21-33857-3			PCB 2 tails	

* Consult Amphenol Aerospace for tail configurations and tail diameters.
** Size 12 twinax and triax contacts are intermatable.
† Consult Amphenol Aerospace for current release of this contact.

CONTACT ORDERING: Example number given in chart 21-33633-7 should be ordered as 21-033633-007; example number given in chart 21-33686-10 should be ordered as 21-033686-010. Adding Zeros is necessary for Amphenol ordering process on all contact numbers.

Front face of pin inserts illustrated

Insert Arrangement	9-5	10-2	11-2	12-3	13-3	12-4	13-4	14-4	15-4
Connector Series	TV	SJT	LJT, TV	JT	LJT	JT, SJT	LJT, TV	JT	LJT
Service Rating	Grounded	I		II		I		I	
Number of Contact	1	2		3		4		4	
Contact Size	8 Twinax	16		16		16		12	

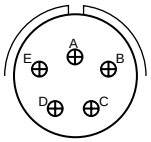

Insert Arrangement	14-5	15-5	14-15	15-15	14-68	15-68	14-97	15-97	16-6	17-6
Available in Connector Series	JT, SJT	LJT, TV	JT, SJT	LJT, TV	JT	LJT	JT, SJT	LJT, TV	JT, SJT	LJT, TV
Service Rating	II		I		I		I		I	
Number of Contact	5		14	1	8		8	4	6	
Contact Size	16		20	16	16		20	16	12	

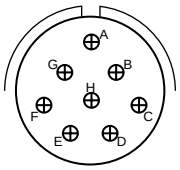

Insert Arrangement	16-8	17-8	16-13	17-13	16-99	17-99	17-2	17-22	16-6	17-6
Connector Series	JT, SJT	LJT, TV	JT, SJT	LJT	JT, SJT	LJT, TV	LJT	TV	LJT	TV
Service Rating	II		I		I		M		Coax	
Number of Contact	8		13		21	2	38	1	2	2
Contact Size	16		16		20	16	22D	8	12	8

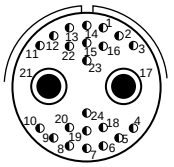

Insert Arrangement	17-25		18-11	19-11	18-28	19-28	18-30	19-30	19-31		
Connector Series	LJT		JT, SJT	LJT, TV	JT	LJT	JT	LJT	TV		
Service Rating	M		II		I		I		M		
Number of Contact	22	2	11		26	2	29	1	2	1	12
Contact Size	22D	8	16		20	16	20	16	8	12	22D

The insert arrangements shown on this page and the next page represent the most readily available patterns within the 38999 Circular Series. If you require other arrangements than what are shown here, consult Amphenol for further availability. In most cases, unless otherwise stated, size 8 and size 12 cavities can be filled with either coax, twinax, triax or power contacts.

CONTACT LEGEND

8	10	12	16	20	22D
Coax/Twinax/ Triax or Power	Twinax/Triax/ or Power	Coax/Twinax/ Triax or Power	Coax or Power	Power	Power

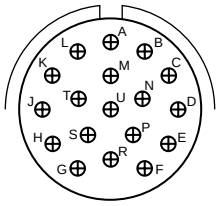

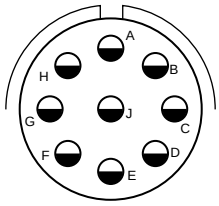

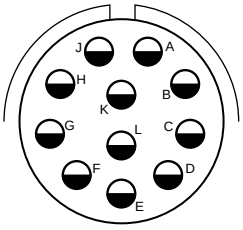

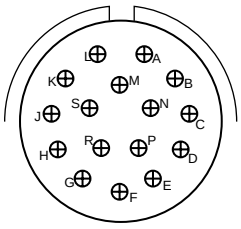

Insert Arrangement	18-68	19-68	18-96	20-11	21-11	20-16	21-16
Connector Series	JT	LJT	JT	JT, SJT	LJT,TV	JT, SJT	LJT,TV
Service Rating	I		I	I		II	
Number of Contact	18		9	11		16	
Contact Size	16		12	12		16	

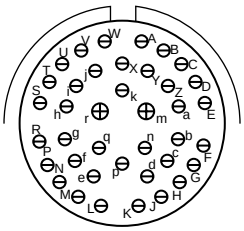

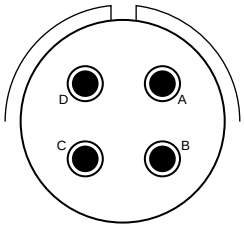

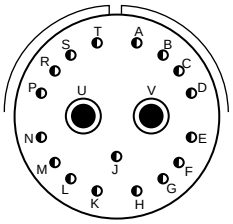

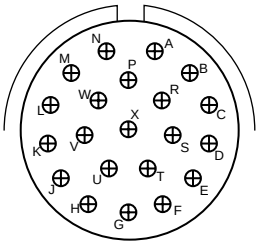

Insert Arrangement	20-39	21-39	20-75	21-75	20-79	21-79	22-21	23-21
Connector Series	JT, SJT	LJT,TV	SJT	LJT,TV	SJT	LJT	JT, SJT	LJT,TV
Service Rating	I		M		II		II	
Number of Contact	37	2	4		17		21	
Contact Size	20	16	8		22D		16	

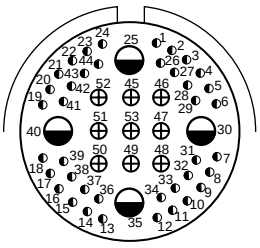

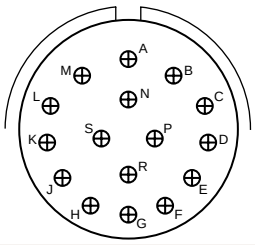

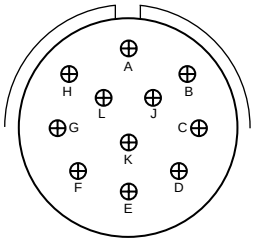

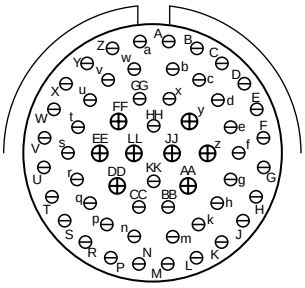

Insert Arrangement	23-54			23-97	23-99	24-4	25-4
Connector Series	TV			LJT	LJT	JT, SJT	LJT,TV
Service Rating	M			II	II	I	
Number of Contact	40	9	4	16	11	48	8
Contact Size	22D	16	12	16	16	20	16

CONTACT LEGEND

8	10	12	16	20	22D
Coax/Twinax/ Triax or Power	Twinax/Triax/ or Power	Coax/Twinax/ Triax or Power	Coax or Power	Power	Power

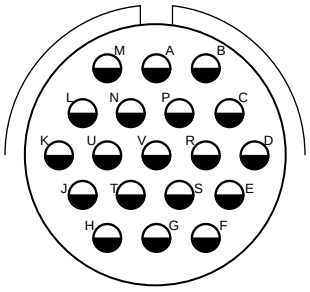

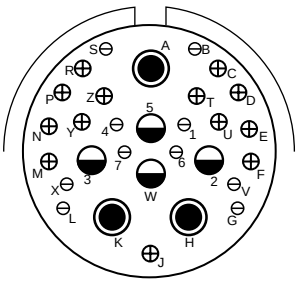

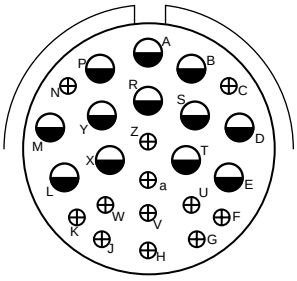

Insert Arrangement	24-19	25-19	24-20		25-20*		24-24	25-24
Connector Series	JT, SJT	LJT, TV	SJT		LJT, TV		JT, SJT	LJT, TV
Service Rating	I		N				I	
Number of Contact	19		10	13	3	4	12	12
Contact Size	12		20	16	8	12	16	12

(Locations U and Y - Dedicated to Fiber Optics)

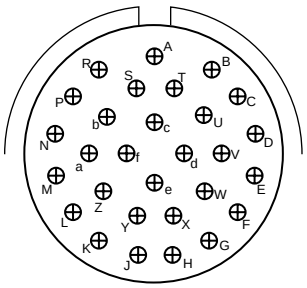

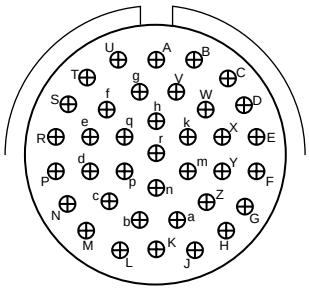

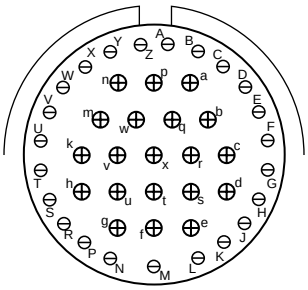

Insert Arrangement	24-29	25-29	24-37	25-37	24-43	25-43
Connector Series	JT, SJT	LJT, TV	JT, SJT	LJT, TV	JT, SJT	LJT, TV
Service Rating	I		I		I	
Number of Contact	29		37		23	20
Contact Size	16		16		20	16

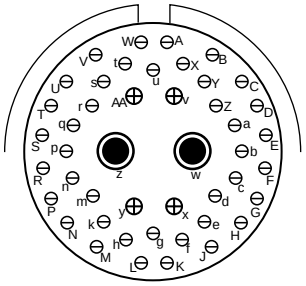

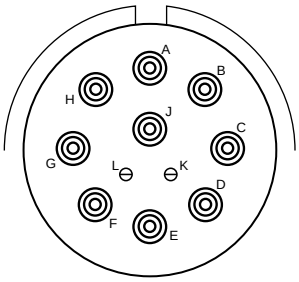

Insert Arrangement	24-46	25-46	25-11*
Connector Series	SJT	LJT, TV	LJT, TV
Service Rating	I		N
Number of Contact	40	4 2	2 9
Contact Size	20	16 8	20 10

* For use in MIL-STD-1760 applications with MIL-DTL-38999 Series III.

CONTACT LEGEND

8	10	12	16	20	22D
Coax/Twinax/ Triax or Power	Twinax/Triax/ or Power	Coax/Twinax/ Triax or Power	Coax or Power	Power	Power

Amphenol Aerospace

Amphenol's medium to heavy weight circular include the MS/Standard MIL-DTL-5015 series and the heaviest weight, largest size circular is the Heavy Duty MIL-DTL-22992 series. These time-tested circulars have been used for several years. They are dependable general duty and environmentally resistant connectors for military and industrial applications.

Shielded coax contacts, although more popularly used in 38999 types and 26482 types, can be incorporated into some arrangements of the 5015 and 22992 type circulars. Shielded coaxial contacts within these series are considered MS modifications to the MIL-spec connector and the coax contacts are pre-installed in the connector. Normal operating voltage with power contacts only is up to 3000 VAC (RMS) at sea level for MIL-DTL-5015 circulars. The Heavy Duty types are designed for high current capacity and have current ratings (with power contacts only) of up to 200 amps.

MS/Standard MIL-DTL-5015 Type Connectors

Standard and Heavy Duty Circular offer these features for contact termination flexibility:

- Insert arrangements that can incorporate:
- Size 4, 8 & 12 Crimp Coax contacts, pre-installed in the connector
- Wide selection of connector shell styles and sizes
- Standard power contact options within the various connector styles include: solder type, crimp front release, crimp rear release
- Coax contacts are designed to the same high performance standards as power contacts. Coax and power contacts may be intermixed with no degradation of connector reliability.

Heavy Duty QWLD, MIL-DTL-22992 Connectors

Amphenol® MS/Standard Circular MIL-DTL-5015* Type Connector Family:

See MS/Standard catalog 12-020 for complete information on these styles

MS-A, MS-C, MS-E, MS-F, MS-R

- Produced in strict accordance with MIL-DTL-5015
- Threaded coupling, solder or crimp rear insertion contacts (coax available in crimp type only)
- Class A, Solid Shell - intended for general connector usage
- Class C, Pressurized - for use on pressurized bulkheads or pressure barriers
- Class E/F, Environmental Resisting - ideally suited for installation where condensation, vibration and rapid changes in pressure or temperature are considerations
- Class R, Lightweight Environmental Resisting - shorter in length and lighter in weight than Class E

Amphenol® Heavy Duty Circular MIL-DTL-22992 Connector Family:

QWLD

- Designed for most power and control circuits
- Military MIL-DTL-22992 qualified versions and proprietary equivalents

See Catalog 12-052 for complete information on these styles.

QWL

- A more compact heavy duty design for industrial power and control applications

See Catalog 12-053 for complete information on these styles.

GENERAL ORDERING INFORMATION

Amphenol MS/Standard MIL-DTL-5015 type and Heavy Duty MIL-DTL-22992 type circulars are normally supplied with a full complement of power contacts, separately packaged. Coax contacts are ordered by part number as referenced in the part number charts on the following pages of this catalog, and are substituted for the power contacts at the time of the cable or equipment assembly. Coax contacts are pre-installed in these series. Installation instructions for the coax contacts for these series are provided in Amphenol document L-650.

HOW TO ORDER:

1. Select the coax contacts designed for the cable being used from the chart on page 409 of this catalog.
   Select a connector insert from those shown on page 44 which will accommodate the quantity and size of coaxial contacts needed plus any power contacts required.
2. Determine the MS/Standard or Heavy Duty Series style desired. (See features of each series referenced above). The catalog referenced for each series will guide you in determining shell style, finish, service class and insert rotation required for your application.
   MS/Standard MIL-DTL-5015 Type Connectors (Catalog 12-020 on-line at www.amphenol-industrial.com)
   Catalog 12-052 - MIL-DTL-22992 QWLD Connectors (on-line at www.amphenol-aerospace.com)
   Catalog 12-053 - QWL Connectors (currently not on-line; consult Amphenol Aerospace for hardcopy)
3. Consult Amphenol, Sidney, NY with the pertinent cable, contact, insert arrangement and connector style choices for complete connector part number.

* Amphenol also offers the following other MIL-DTL-5015 Circular Connectors which are threaded coupling (consult Amphenol Industrial for availability of shielded contacts in any of these series):

- Amphenol®/Matrix® MIL-DTL-5015 with crimp rear releasable and rear insertable contacts. (See Matrix 5015 section of this catalog)
- Amphenol® MIL-DTL-5015 Modifications (Ask for Industrial Catalog 12-021)
- Amphenol® GT Series with reverse bayonet coupling (Ask for Catalog 12-024)
- Amphenol® AC Threaded and AC-B Bayonet Series (Ask for Industrial Catalog 12-025)

NOTE:
MIL-DTL-5015 supersedes MIL-C-5015
MIL-DTL-22992 supersedes MIL-C-22992

Coaxial Contacts for MIL-DTL-5015, Heavy Duty MIL-DTL-22992 General Description

Amphenol® Coaxial Contacts- can be incorporated into MS/Standard MIL-DTL-5015 Type Circular Connectors and Heavy Duty MIL-DTL-22992 Connectors. They offer the same durability advantages and design benefits for reliable interconnection as the Amphenol coax contacts used in high performance D38999 connectors. A variety of military and commercial shielded cables are accommodated within these circular series.
Other features of the coax contacts available for MS/Standard and Heavy Duty circulars include:

- Several insert arrangements that can incorporate:
  - Size 4, 8 and 12 coax contacts
- Advanced shielding wire technology in a rugged military connector
- Single connector with multiple coaxial connection eliminates cross-mating
- Positive contact captivation - especially important in these series with its much higher coupling/uncoupling force
- Older shielded cable type availability

Coax Contact, Pin
for use in MS/Standard MIL-DTL-5015 and Heavy Duty MIL-DTL-22992 Connectors

Coax Contact, Socket
for use in MS/Standard MIL-DTL-5015 and Heavy Duty MIL-DTL-22992 Connectors

TYPICAL ELECTRICAL PERFORMANCE

Size 4, 8 & 12 Contacts
Contact Resistance:
Center @ 1 Amp, 170 millivolts max. voltage drop @ 25°C
Outer @ 12 Amps, 150 millivolts max. voltage drop @ 25°C
Dielectric Withstanding Voltage:
Size 4 & 8: 1,300 VAC Rms @ sea level
Size 12: 1,000 VAC Rms @ sea level
Size 4, 8 & 12: 250 VAC Rms @ 50,000 ft.
Insulation Resistance
5,000 megohms minimum @ 25°C

All contacts in these series are non-impedance matched contacts.

Part numbers 21-33063-XX( ) and 21-33064-XX( ) are moisture seal design (internal O-ring).

CONTACT FINISHES:

Suffix	Finish
1	0.00020 min. silver over copper flash
2	0.00005 min. gold (Knoop hardness 130-200) over silver
3	0.00010 min. gold (Knoop hardness 130-200) over silver
4	0.00010 min. gold (Knoop hardness 130-200) over copper
5	0.00005 min. gold (Knoop hardness 130-200) over nickel
E	0.00005 min. gold (Knoop hardness 90 max.) over copper
F	0.00005 min. gold (Knoop hardness 130-200) over copper
H	0.00010 min. gold (Knoop hardness 130-200) over copper

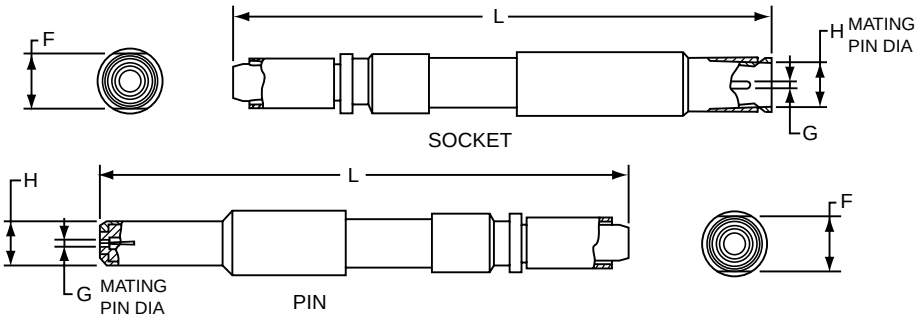

NOTE: All contacts of the same size and the same inner and outer contact diameters (G & H) will mate with each other.

COAX CONTACTS
For use in MS/Standard MIL-DTL-5015 Type and Heavy Duty MIL-DTL-22992 Type Connectors

Cable	Contact Part Number (See L-650 Termination Instruction Sheet for all contacts listed below)**		Contact Size	Finish on Mating Parts (See Pg. 42)	Dimensional Data (See Drawings above)					Crimp Ferrule Tools			Retainer Nut Wrench
					G Dia.	H Dia. ± 0.001	F Across Flats ±0.004	L Length Ref.					
	Pin	Socket						Pin	Socket	MIL-T-22910/7-1 Tool Use with Die Part Number	MIL-T-22520/5-01 Tool Use with Die Part Number	MIL-T-229520/10-01 Tool Use with Die Part Number	
RG-58C/U, RG-141A/U, RG-303/U	21-33014-1 21-33034-2 21-33048-2 21-33016-5 21-33130-2( )	21-33013-1 21-33033-2 21-33047-2 21-33015-5 21-33129-2( )	8 8 8 8 8	5 1 †† 3 ***	0.0355 ± 0.0010	0.218	0.280	1.481	1.511	M22910/7-15 (B)	M22520/5-05 (B) M22520/5-41 (B)	M22520/10-07 (B)	11-8676-2
RG-59B/U, RG-62A/U, RG-62B/U, RG-210/U	21-33014-5 21-33016-2 21-33034-5 21-33130-5( ) 21-33064-21( )	21-33013-5 21-33015-2 21-33033-5† 21-33129-5( ) 21-33063-21( )	8 8 8 8 8	5 3 1 *** ***	0.0355 ± 0.0010	0.218	0.280	1.481	1.511	M22910/7-18 (B)	M22520/5-45 (B)		11-8676-3
	21-33060-10( )	21-33059-10( )	4	***	0.0400 ± 0.0010	0.344	0.375	1.669	1.605				11-8676-4
RG-161/U, RG-174A/U, RG-179B/U, RG-187A/U, RG-188A/U, RG-316/U	21-33014-3 21-33016-1 21-33034-3 21-33130-3( )† 21-33064-20( )†	21-33013-3 21-33015-1 21-33033-3 21-33129-3( )† 21-33063-20( )†	8 8 8 8 8	5 3 1 *** ***	0.0355 ± 0.0010	0.218	0.280	1.481	1.511	M22910/7-12 (B)	M22520/5-03 (A) M22520/5-08 (A) M22520/5-35 (B)	M22520/10-05 (A)	11-8676-2
	21-33014-21 21-33034-1 21-33048-1 21-33130-1( )†	21-33013-21 21-33033-1 21-33047-1 21-33129-1( )†	12 12 12 12	5 1 *** ***	0.0200 ± 0.0005	0.128	0.172						11-8676-1
RG-178B/U, RG-196A/U	21-33014-22†	21-33013-22†	12	5	0.0200 ± 0.0005	0.128	0.172	1.481	1.511	M22910/7-11 (B)	M22520/5-03 (B) M22520/5-33 (B)	M22520/10-05 (B)	11-8676-1
RG-180B/U, RG-195A/U	21-33014-6 21-33034-6† 21-33048-3 21-33130-6( )†	21-33013-6 21-33033-6† 21-33047-3 21-33129-6( )	8 8 8 8	5 1 *** ***	0.355 ± 0.0010	0.218	0.280	1.481	1.511	M22910/7-15 (B)	M22520/5-05 (B) M22520/5-41 (B)	M22520/10-07 (B)	11-8676-2
RG-212/U	21-33060-11( )	21-33059-11( )	4	***	0.0625 ± 0.0010	0.344	0.375	1.669	1.605	M22910/7-14 (A)	M22520/5-39 (A)		11-8676-4
RG-140/U, RG-302/U	21-33014-8 21-33034-8 21-33130-8( )†	21-33013-8 21-33033-8 21-33129-8( )†	8 8 8	5 1 ***	0.0355 ± 0.0010	0.218	0.280	1.481	1.511	M22910/7-17 (B)	M22520/5-05 (A) M22520/5-19 (B)	M22520/10-07 (A)	11-8676-2
RG-55B/U, RG-142A/U, RG-142B/U, RG-223/U	21-33014-4 21-33034-4 21-33130-4( )	21-33013-4 21-33033-4 21-33129-4( )	8 8 8	5 1 ***	0.0355 ± 0.0010	0.218	0.280	1.481	1.511	M22910/7-17 (B)	M22520/5-05 (A) M22520/5-19 (B)	M22520/10-07 (A)	11-8676-2
	21-33060-12( )	21-33059-12( )	4	***	0.0625 ± 0.0010	0.344	0.375	1.669	1.605				11-8676-4

CONTACT ORDERING: Example number given in chart 21-33014-1 should be ordered as 21-033014-001; example number 21-33014-21 should be ordered as 21-033014-021. Adding Zeros is necessary for Amphenol ordering process on all contact numbers. ***See finish options for MS/Standard and Heavy Duty contacts listed on page 408. Replace the parenthesis of the contact part number with the finish suffix number. However, you should consult Amphenol Aerospace regarding the availability of all finish choices for each part number.

† Consult Amphenol Aerospace for current availability of this contact.
CRIMPING TOOLS: Italicized letters in parenthesis that follow positioner part numbers indicate applicable die closure. Commercial equivalents with the same die closure dimension may be used.
†† 21-33047-X and 21-33048-X are supplied with E (soft gold) finish on mating socket parts, and F (hard gold) finish on mating pin parts.
**Termination instruction sheet L-650 can be found on-line at: www.amphenol-aerospace.com/serviceinstructions.asp

Insert Patterns - Standard MIL-DTL-5015, Heavy Duty MIL-DTL-22992

Incorporating Coax Contacts

Front face of pin inserts illustrated

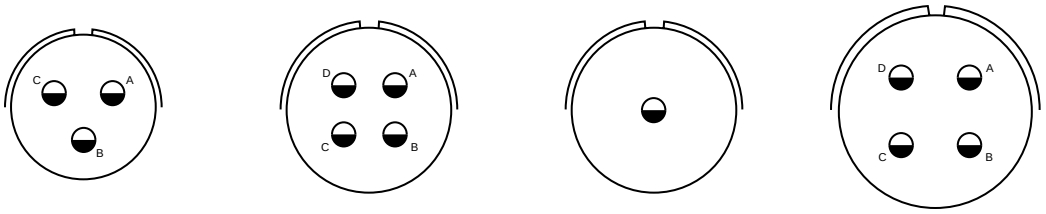

Insert Arrangement	16-10	18-10	18-16	20-4
Connector Series	**MS/Standard, QWLD, QWL**	**MS/Standard, QWLD, QWL**	**MS/Standard, QWLD, QWL**	**MS/Standard, QWLD, QWL**
Service Rating	A	A	C	D
Number of Contact	3	4	1	4
Contact Size	12	12	12	12

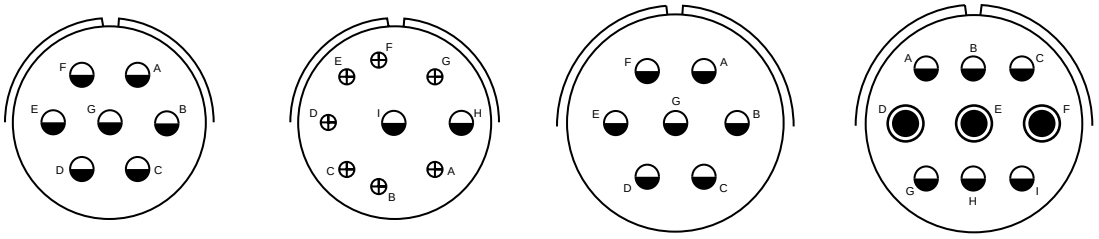

Insert Arrangement	20-15	20-16		24-2	24-11	
Connector Series	**MS/Standard, QWLD, QWL**	**MS/Standard, QWLD, QWL**		**MS/Standard, QWLD, QWL**	**MS/Standard, QWLD, QWL**	
Service Rating	A	A		D	A	
Number of Contact	7	2	7	7	3	6
Contact Size	12	12	16	12	8	12

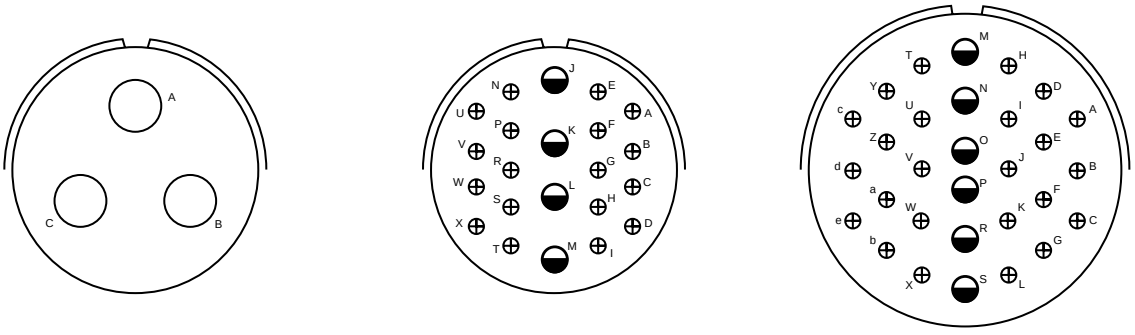

Insert Arrangement	28-6	28-11		32-8	
Connector Series	**MS/Standard, QWLD, QWL**	**MS/Standard, QWLD, QWL**		**MS/Standard, QWLD, QWL**	
Service Rating	D	A		A	
Number of Contact	3	4	18	6	24
Contact Size	4	12	16	12	16

The insert arrangements shown on this page represent the most readily available patterns within the MIL-DTL-5015 and MIL-DTL-22992 Series. If you require other arrangements than what are shown here, consult Amphenol for further availability. MS/Standard connectors have over 200 insert pattern arrangements available, and within these patterns any size 4, 8 or 12 contact cavities can be incorporated with coax contacts. However, you need to consult Amphenol, Sidney NY for availability and ordering information. All coax contacts in the Standard and Heavy Duty series come pre-installed in connectors.

CONTACT LEGEND

4	8	12	16
Coax or Power	Coax/ Twinax/Triax or Power	Coax/Twinax/ Triax or Power	Coax or Power

Amphenol provides an impressive array of Rectangular Interconnection products to meet the needs of high density systems such as opto-electrical backplanes used in many applications that include: medical equipment, IC chip testers, telecommunications, military and commercial aviation, military ground vehicles, GPS systems, space and industrial applications.

- ARINC 600 and R27 Rack and Panel connectors can incorporate:
  - size 8 Coax contacts
  - Size 1 and size 5 Coax (consult Amphenol Canada)
  - Size 12 Twinax contacts
  - Size 8 Quadrax contacts
  - Size 8 Differential Twinax contacts

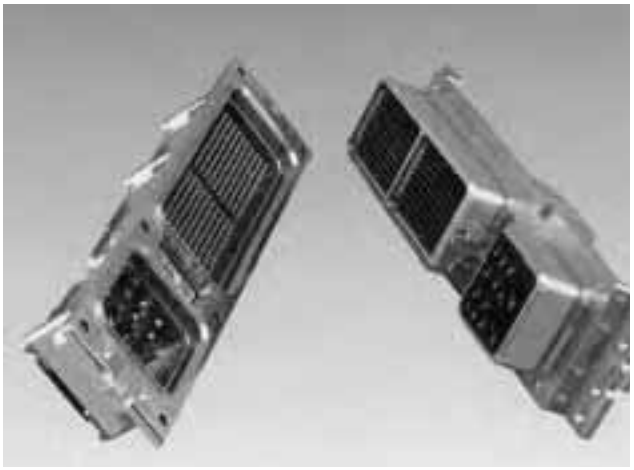

ARINC 600 Rack and Panel Connectors are high density connectors that can incorporate high speed shielded contacts

ARINC 600 Rack and Panel Rectangular Connectors

See Amphenol Canada Publication SL-379, ARINC 600 Rack and Panel Connectors for complete information.

- The ARINC 600 is the successor to the ARINC 404 for many of the new avionics designs and offers lower mating force contacts, increased contact count and a front release, floating keying system
- ARINC 600 Connectors are a recognized standard rack and panel connector for aircraft applications with both environmental and non-environmental versions available
- Designed to meet all relevant ARINC 600 connector specifications
- Front removable keying posts
- Up to 800 size 22 contact positions in one connector
- Contact options: standard contacts are power/signal crimp rear release in sizes 12, 16, 20 and 22 in crimp or PCB; or shielded coax, concentric twinax, quadrax contacts; or fiber optics
- Waveguide connections

R27 Series Rack and Panel Connector can incorporate high speed shielded contacts

R27 Rack and Panel Rectangular Connectors

See Amphenol Canada Publication for R27 Series Connectors for complete information.

- The R27 Series is a robust rectangular connector designed to meet or surpass all the requirements of the MIL-DTL-83527 specification and EN 3682 European Standard.
- Well suited for harsh environments - enhanced environmental sealing, robust and durable shells, EMI shielding spring
- Filtered or non-filtered
- Connectors, shells, inserts, termination modules and contacts are sold separately or fully assembled
- Interchangeable insert patterns with ARINC 600 models
- Contact options: standard contacts are power/signal crimp rear release in sizes 12, 16, 20 and 22 in crimp or PCB; or shielded coax, concentric twinax, quadrax contacts; or fiber optics

Coax Contact , Size 8 for use in ARINC Rack and Panel Connectors

Quadrax Contact , Size 8 for use in ARINC Rack and Panel Connectors

ARINC 600 & R27 Rack and Panel Connectors

QUADRAX CONTACTS FOR USE IN ARINC 600 & R27 CONNECTORS

Cable	Contact Part Number (Termination Instruction Sheet)**		Impedance (Ohms)	Contact Size	Crimping Tools	
	Pin	Socket			Inner Contact	Outer Contact
Tensolite NF24Q100, 24443/9P025X-4(LD), S280W502-4, 24443/03130X-4(LD)	21-33382-21 (L-2119-AH)	21-33383-21 (L-2119-AH)	100	8	M22520/2-01 with Positioner Daniels K709 (M22520/2-37)	M22520/5-01 with Die Set M22520/5-45 (Location B)
Draka Fileca F-4703-3	21-33382-31 (L-2119-I)	21-33383-31 (L-2119-I)	100			
Draka Fileca F-4704-5, NF22Q100	21-33382-101 (L-2119-AS)†	21-33383-101 (L-2119-AS)†	100			
JSFY02-1	21-33382-71 †	21-33383-71 †	110			
Tensolite 26473/02006X-4(LD), Gore RCN8328	21-33382-61 (L-2119-L)	21-33383-61 (L-2119-L)	150		M22520/2-01 with Positioner Daniels K709 (M22520/2-37)	M22520/5-01 with Die Set M22520/5-45 (Location A)

DIFFERENTIAL TWINAX CONTACTS FOR USE IN ARINC 600 & R27 CONNECTORS

Cable	Contact Part Number (Termination Instruction Sheet)**		Impedance (Ohms)	Contact Size	Crimping Tools	
	Pin	Socket			Inner Contact	Outer Contact
ABS0386WF24	21-33378-21 (L-2119-G)	21-33379-21 (L-2119-G)	100	8	M22520/2-01 with Positioner Daniels K709 (M22520/2-37)	M22520/5-01 with Die Set M22520/5-45 (Location A & B)
ASNE0272TK22	21-33378-31 (L-2119-G)	21-33379-31 (L-2119-G)	100			
ASNE0272TK24	21-33378-41 (L-2119-G)	21-33379-41 (L-2119-G)	100			
Tensolite 24463/9P025X-2(LD)	21-33378-51 †	21-33379-51 †	100			
GC875TM24H	21-33378-61 (L-2119-AU)	21-33379-61 (L-2119-AU)	77			
	21-33378-71 †	21-33379-71 †	110			

COAX CONTACTS FOR USE IN ARINC 600 & R27 CONNECTORS

Cable	Contact Part Number (Termination Instruction Sheet)**		Contact Size	Crimping Tools	
	Pin	Socket		Inner Contact	Outer Contact
RG-179	21-33676-1 (L-2090-B)	21-33675-1 (L-2090-A)	8	M22520/2-01 with Positioner K1275	M22520/10-01 with Die Set M22520/10-05 (A)
RG-179	21-033476-001	21-033475-001			
5M2869-001	21-33676-2 †	21-33675-2 †			

PCB QUADRAX CONTACTS FOR USE IN ARINC 600 & R27 CONNECTORS

PCB Quadrax Contacts	Contact Part Number		Impedance (Ohms)	Contact Size
	Pin	Socket		
PCB (.346 Length)		21-33397-171	100	8
PCB (.473 Length)	21-33398-261			

TWINAX CONTACTS FOR USE IN ARINC 600 & R27 CONNECTORS

Cable	Contact Part Number (Termination Instruction Sheet)**		Contact Size	Crimping Tools	
	Pin	Socket		Inner Contact	Outer Contact
EPD 32263, 10612, GSC-12-2548-00	21-33631-4† (L-2092-U)†	21-33632-3 (L-2092-J)	12	MH992 with Positioner K1365	GS200-1 with Positioner GP959

CONTACT ORDERING: Example number given in chart 21-33382-21 should be ordered as 21-033382-021; example number 21-33382-101 should be ordered as 21-033382-101. Adding Zeros is necessary for Amphenol ordering process on all contact numbers.

† Consult Amphenol Aerospace for current release of this contact or instruction sheet if applicable.

Daniels crimping tools are available from Daniels Mfg. Corp. 6103 Anno Ave., Orlando, FL 32809

**Termination instructions are packaged with each contact and can be found on-line at: www.amphenol-aerospace.com/serviceinstructions.asp

Amphenol Aerospace

Amphenol has today's broadest range of interconnection solutions for military, commercial and industrial applications. As a worldwide interconnection product leader, Amphenol can meet not only connector needs, but also contact needs of all types. In addition to the shielded and high frequency contacts shown in this publication, Amphenol offers many other contact styles:

PRINTED CIRCUIT BOARD SIGNAL AND POWER CONTACTS

See the Printed Circuit Board section of this catalog.

THERMOCOUPLE CONTACTS

Available for MIL-DTL-5015, MIL-DTL-22992, MIL-DTL-26482, MIL-DTL-26500, MIL-DTL-38999, MIL-DTL-83723 and other series connectors. Thermocouples are designed for temperature measuring applications, and are available in both pin and socket configurations in alumel, chromel, iron and constantan materials. Please refer to the mil series sections in this catalog.

FLEX TERMINATION ASSEMBLIES FOR PCB APPLICATION

Flex circuits are available for MIL-DTL-38999, MIL-DTL-5015 and MIL-DTL-26482, as well as for special products such as EMI/EMP filter connectors and rectangular LRM connectors. Please contact an Amphenol Sales Person for more information or visit www.amphenol-aerospace.com/support to find a sales person in your area.

FIBER OPTIC TERMINI

See the Fiber Optic section of this catalog

FILTER PI TYPE TUBULAR AND PLANAR ARRAY CONTACT ASSEMBLIES

See the Printed Circuit Board section of this catalog.

RADSOK® HIGH POWER CONTACTS

Amphenol's RADSOK® contact design is a hyperbolic, stamped grid configuration within the socket cylinder. As the male pin is inserted, axial members in the female socket half deflect, imparting high current flow across the connection with minimal voltage loss. Another advantage of the RADSOK® contact is low insertion force. The RADSOK® contact has been incorporated into three of the large industrial families of connectors; the GT series, the P-Lok series and 5015 types. These connectors, known as Amphe-Power® connectors, can handle up to 150% higher amperages. Amphenol Industrial Operations division also provides a wide range of power to board interconnects utilizing the RADSOK® technology.
These provide high amperage connection to busbars, wires and circuit boards.

RADSOK® contacts are being further introduced into military/aerospace products. High power RADSOK® is now developed into applications for engine connectors for Commercial Air, and are also being designed into LRM interconnects for high speed data transfer. See Amphenol Industrial Brochure, SL-391. (visit www.amphenol-industrial.com)
See more information on RADSOK® in options, other products section of this catalog pages 419-421.

RECTANGULAR CONNECTORS

Amphenol provides an impressive array of Rectangular Interconnection products to meet the needs of high density systems such as opto-electrical backplanes used in many applications that include: medical equipment, IC chip testers, tele-communications, military and commercial aviation, military ground vehicles, GPS systems, space and industrial applications.

Available in Low Mating Force with Brush contacts, Power Strip, LRM, ARINC 600 Rack and Panel, and R27 Rack and Panel Rectangular Connectors.

For more information please contact an Amphenol Sales Person on visit www.amphenol-aerospace.com/support for a sales person in your area.

PC Tails Signal and Power Contacts and Custom PC Tail Designs. Compliant Pin (Press Fit) Contacts for Solderless Mounting to PC Boards

Sculptured Flex Circuits

RADSOK® High Power Contacts and Connectors

LRM Connectors with Inserts of Staggered Brush Contacts and Inserts of Coax Contacts

The following check list is provided to help you specify a high frequency contact and cable system, and it will help our design team to meet your requirements. You may copy this page and fax it to Amphenol Aerospace 607-563-5157, attention Contact Design. Or call 607-563-5011 or 800-678-0141 for assistance.

Date _____

Amphenol Salesperson _____

CUSTOMER INFORMATION

Customer Company Name _____

Engineer Name _____

Program _____

Forecast _____

CONNECTOR INFORMATION

Connector Family: TV-R ☐ LJT-R ☐ JT-R ☐

Other _____

Insert Arrangement Desired _____

Shell Style _____

Shell Plating _____

CONTACT INFORMATION

Type: Coaxial ☐ Concentric Twinax ☐ Triax ☐

Differential Twinax* ☐ Quadrax* ☐

Size*: 8 ☐ 12 ☐ 16 ☐

Contact Impedance Matched? Yes ☐ No ☐

50Ω ☐ 75Ω ☐ 100Ω ☐ 150Ω ☐ Other _____

* Quadrax and Differential Twinax currently available in size 8 only.

CABLE INFORMATION

Cable Part Number* _____

Cable Manufacturer _____

Cable Type: Coaxial ☐ Twinax ☐

Triax ☐ Quadrax ☐

Cable Impedance _____

* if not an RG-Number complete below information:

O.D. of Inner Wire _____ AWG of Inner Wires _____

No. of Inner Wire Strands _____ Material of Inner Wires _____

O.D. of Inner Insulation _____ Material of Inner Insulation _____

O.D. of First Braid _____ Braid Type _____ (flat, round, wrap) Braid AWG _____

O.D. of First Jacket _____ Jacket Material _____

O.D. of Second Braid _____ Braid Type _____ (flat, round, wrap) Braid AWG _____

O.D. of Second Jacket _____ Jacket Material _____

It is essential that a 3 foot sample of the cable be supplied for performance and crimp tool development.

PERFORMANCE INFORMATION

Electrical Protocol _____

VSWR Requirement 1. to 1. _____ Cross Talk _____ db

Operating Frequency _____ Attenuation _____ Insertion Loss _____

Operating Voltage _____ VAC (RMS) _____ DC

Current Outer Contact _____ Amp Current Inner Contacts _____ Amp

Application Temperature _____ Environmental Requirement _____

Amphenol
Options, Other Products

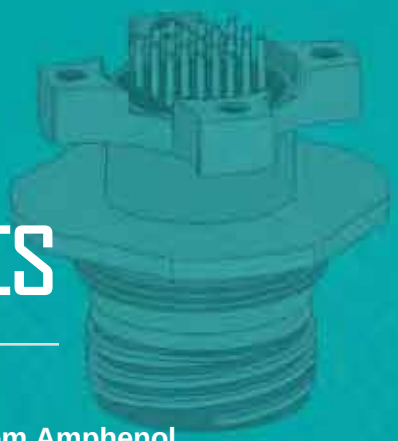

Press Fit Connectors on PC Board

Cable Assemblies

38999 Connectors with RADSOK®

Custom Epoxy Sealed Hermetic

Integrated Systems

Amphe-Power with RADSOK®

Class 'L' Heavy Duty

Rectangular Connectors with Brush Contacts

TABLE OF CONTENTS

Options and Other Products from Amphenol

- Table of Contents 415
- Press Fit Connectors for PC Board Applications (38999 Option) . . . 416
- Cable Solutions - Value Added Cable Assemblies 417, 418
- RADSOK® Contacts for High Power Applications 419
- RADSOK® Technology Advantages & Interconnect Solutions . . 420, 421
- ESD Protected Connectors - Protection from Electrostatic Discharge 422
- Custom Hermetic/Epoxy Sealed Connectors (38999 Series III Option) 423
- Durmalon Connector Finish, Alternative to Cadmium 424
- Amphenol Integrated Systems, A Leading Choice for Packaging Solutions 425

Additional Circular Connectors for a Wide Range of Applications - Military and Industrial

- Amphenol's Wide Range of Circular Interconnects 426
- Amphe-Lite, Non-MS Commercial 38999 Type 426
- GT, GT-PC, GTC-M Connectors 427
- Pyle Star-Line®, Star-Line EX® 428
- Amphe-Power™ Connectors with RADSOK® Contacts 428, 429
- Class "L", MIL-DTL-22992 429
- QWLD, MIL-DTL-22992, and QWL, MIL-DTL-22992 Type 430
- Aquacon Immersible Connectors 430
- 67 and 165 Series (5015 Type) 431
- 348 Series, MIL-C-81511 Series I & II 431
- Shorting Plugs 431

Rectangular Interconnects for a Wide Range of Military Applications

- Low Mating Force Rectangular Connectors with Brush Contacts . . . 432
- Brush Contact Technology 432
- Hybrid Rectangular Connector with Brush/Power/Coax/Fiber Combo 433
- LRM Surface Mount Connectors 433, 434
- Pyle LMD & LMS Modular Connectors 435
- VME P0/J0 MT Connectors with Fiber Optics 435

Interconnects for Industrial Markets:

- Process Control
- Rail Mass Transportation
- Heavy Equipment
- Energy
- Petrochemical, Power Generation

Rectangular Interconnect Typical Markets:

- Medical Equipment, Factory Automation
- IC Chip Testers
- GPS Systems, Telecommunications
- Military and Commercial Aviation
- Military Vehicles

Amphenol Aerospace

Press Fit Connectors
For PC Board Applications–38999 Option

Amphenol manufactures a complete series of MIL-DTL-38999 Series I, II, and III Connectors with Press Fit compliant pin contacts for solderless mounting on printed circuit boards. Both pin and socket contacts are available in any MIL-DTL-38999 Series I, II or III insert pattern having contact size 16, 20 or 22D. Available in Mil-Spec and custom shell configurations.

See section “Series III TV”, “Series II JT”, and “Series I LJT” for MIL-DTL-38999 Circular Connectors’ inserts and shell styles and the PCB section for Press Fit Connectors on Printed Circuit Board applications.

Benefits include:

- High speed, low cost board assembly
- Elimination of soldering thermal stress
- No cold soldered joints
- No short circuits by soldered connections
- No cleaning of excess flux
- Optional contact for piercing conformal board coating is available

Press fit connectors accommodate boards with minimum 0.090 inch thickness and 0.040 +/– .003 plated through holes. The insertion force for mounting the connector on the board is 7 to 16 pounds per contact. Refer to L-40450-207 for installation instructions. Contact Amphenol Aerospace for ordering information.

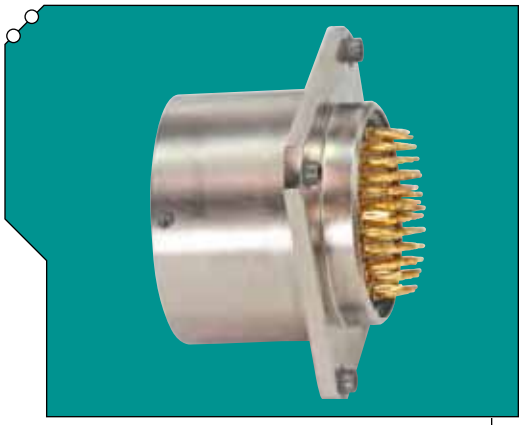

Amphenol Press Fit Connectors for Solderless mounting on printed circuit boards.

Press Fit

Press Fit Connectors on Printed Circuit Board

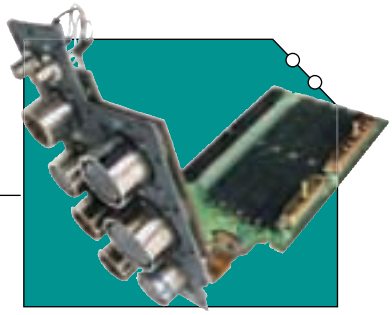

Amphenol Press Fit Contact Technology

- Beryllium copper tail, heat treated to spring hardness
- The compliant eye is a natural 2 beam spring
- The eye is oversized relative to the plated through hole and is compressed upon insertion
- After insertion the spring exerts a normal force on the hole creating an electrical path via a tight friction fit

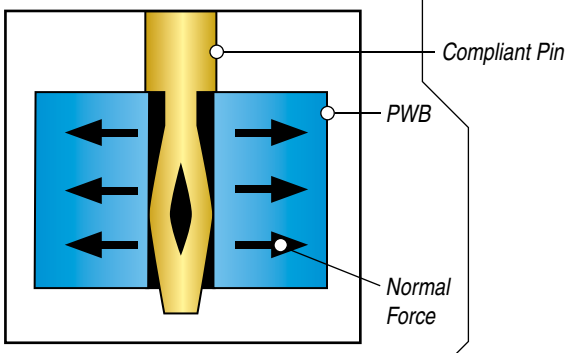

With over 100K Sq. Ft. of cable manufacturing space, and multiple locations in North America and Asia, Amphenol Aerospace has diverse capabilities to design and manufacture harsh environment cable assemblies. Our engineers have over 40 years experience designing cables and harnesses to a wide variety of requirements.

From simple point-to-point assemblies to ruggedized overmolded harnesses, Amphenol has the capabilities to meet a diverse range of cable needs.

Markets Currently Served

- Military Vehicles
- Harsh Environments
- Automotive
- Avionics
- Commercial Aerospace
- Rail Mass Transit
- Munitions Communications
- Oil and Gas

Production Capabilities Include:

- Automated twisters, strippers, cutters, crimpers
- Crimp capabilities for 777MCM to 24AWG wire
- Primary wire extrusions/jacketing
- Custom overmold presses with in house production tooling
- Twisted shielded pair and quadrax cable assemblies
- Full testing capabilities for DWV, IR, continuity, etc.

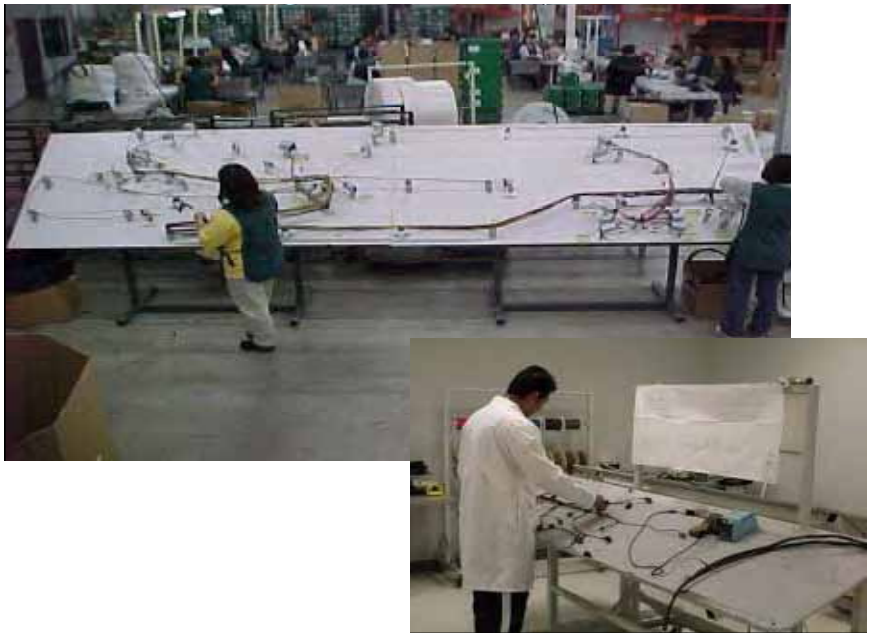

MARKETS

Overmolding

- Amphenol excels in overmolding cable technology, perfect for ruggedized power applications.
- Custom overmold solutions utilize either low or high pressure manufacturing methods, and include various environmental materials.
- Overmolding techniques can include straight and right angle mechanical strain relief in a variety of backshells as well as overmolded in SantoPrene® and other elastomeric materials.

Environmental Capabilities

- Temperature Range: -40° to 200° C capable
- Fluid Resistance: oil, battery acid, hydraulic fluid, diesel
- Flammability: UL94V-O
- Waterproof: IP67

Mold/Press Capability	Over 40 presses: vertical, horizontal, shuttle base
Shot Size	85 cm^3, Discrete Parts: 200 cm^3
Material	PA, PPA, PBT, PET, TPV, PU, PP, PVC, ABS…. others
Production Tooling Time	Simple Tool: 4-6 wks, Complex/High Volume: 10-12 wks
Type of Process	Pre-Mold/Pot and Mold
Testing Capabilities	Hi-Pot up to 1000 VDC/AC
	DWV up to VDC/AC (0.1mA)
	IR, 1Gohm
	Wire Processing, pull test, crimp inspection with CFM

Primary Wire and ArmorLite

- Amphenol is a recognized supplier of primary wire and specialized cable.
- Cable designed for harsh environment applications.
- Production facility includes wire extrusion and cabling lines along with 5 ArmorLite twisters.
- Polyurethane cable jacketing also available.

ArmorLite Features

- Low cost
- Improved crush factor
- Light weight
- Flexible bend radius
- Abrasion resistant
- Cable sizes .210” to .500”
- Durable, UV stabilized polyurethane cable jacket
- Operational temp -40° to +70° C

High-Speed Cable Assemblies

Amphenol provides a large array of cable assemblies with high speed quadrax and differential twinax contacts, as well as coax and concentric twinax contacts. From a simple one-cable interconnection, to a multiple cable system, Amphenol can design and supply your cable needs for high frequency contacts and connectors.

Cables with various electrical protocols, including:

- 100 Base-T
- 1,000 Base-T, -CX, Gigabit Ethernet
- USB 2.0
- IEEE 1394B Firewire
- Ethernet, USB
- And others

RADSOK® Contacts
For High Power Applications

RADSOK® technology is based upon a stamped and formed flat grid, uniquely twisted into a hyperbolic geometry to provide robust, high density contact to the mating pin contact. Most pin and socket technologies rely upon spring (beam element) properties of the contact elements, which tend to weaken over time. Unlike most other pin and socket solutions, the RADSOK® also utilizes the tensile strength properties of the flat, high conductivity alloy grid. This provides the high normal forces required for conductivity while also providing large conductive surface area. Correspondingly low voltage drop and low temperature rise are also achieved while maintaining low insertion forces.

Amphe-Power 5015 connector with insert pattern 28-5 with (2) size 4 RADSOK® sockets and standard contacts.

Standard RADSOK® socket contacts for Amphe-Power® connectors are available in sizes 0, 4, 8 and 12 crimp or solder. Specific sizes can often be produced more economically than other fastening solutions. Amphenol can tailor the contact design to exact customer needs. See page 428 and 429 for more information about Amphe-Power Connectors.

- Socket cylinder within female contact has several equally spaced longitudinal beams twisted into a hyperbolic shape.
- As male pin is inserted, axial members in the female half deflect, imparting high current flow across the connection with minimal voltage loss.
- The hyperbolic, stamped grid configuration ensures a large, coaxial, face-to-face surface area engagement.
- Ideal for crimp termination applications requiring repeated mating cycles and high current with a low milli-volt drop.

The RADSOK® (RADial SOcKet) High Amperage, Low Insertion Force Electrical Terminal provides value to your purchasing, engineering, quality and manufacturing objectives.

Amphenol Mil-Power Connectors

38999 with RADSOK® High Amperage Contacts

- 6 layouts available:
  - Shell size 21 with 4 size 8 RADSOK®
  - Shell size 25 with 4 size 4 RADSOK®
  - Shell size 25 with 1 size 0 RADSOK®
  - Shell size 25 with 2 size 4 RADSOK®
  - Shell size 33 with 2 size 1/0 RADSOK®
  - Shell size 37 with 3 size 1/0 RADSOK®
- Increased current capacity (50% more than standard power)
- Reduced insertion force
- More reliable coupling mechanism (Tri-Start) coupling
- Alternative to cadmium finishes

• HIGH RELIABILITY

Unique RADSOK® design and construction technology create an electrical contact interface that exceeds typical interconnect requirements. Applications in aerospace, medical, industrial, automotive, mining, offshore, and other harsh environments depend on high reliability of the Amphenol RADSOK® technology.

• LOW CONTACT ENGAGEMENT/SEPARATION FORCES

The hyperbolic lamella socket contact construction distributes normal forces over a high percentage of the mating pin surface. This creates a smooth, even engagement effort. This force distribution also contributes to excellent performance in vibration applications with resistance to typical fretting corrosion.

• LOW CONTACT RESISTANCE

The large interface area between the socket lamella and pin surface result in very low contact resistance, enabling the RADSOK® contacts' high current ratings compared to traditional power contact designs.

• HIGH MATING CYCLE DURABILITY

RADSOK® contacts with typical silver plating finishes have demonstrated survival of 20,000 mating cycles. Specialized plating and contact lubricants can extend cycle life to 200,000 matings or higher. Even with continuous exposure to harsh environmental abuse (salt, sand, and high humidity), RADSOK® contacts have been tested to maintain low contact resistance beyond 10,000 mating cycles.

RADSOK® Derating Chart – Temperature vs. Current

Based on single conductors in free air. Wire cross-section same size as pin contact cross-sectional area.

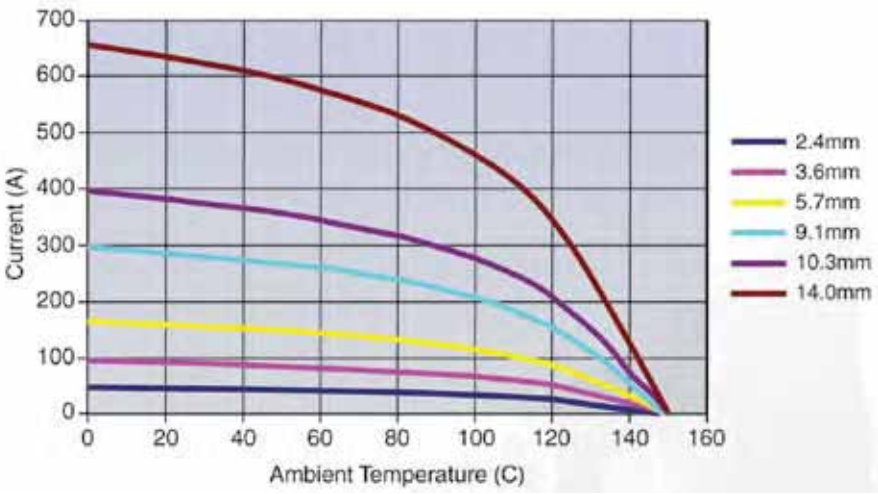

The Amphenol® RADSOK® Solution to Bring more Power to the Board... Three High Amperage Products: PowerBlok, RADSERT, PGY

Amphenol's RADSOK® solution offers many options for high current single-point connections to printed circuit boards. The compact footprint design can supply up to 120 Amp to the board which preserves surface area and provides more flexibility in board design.

For more information on RADSOK® products from Amphenol:
www.amphenol-industrial.com and www.radsok.com
Contact Amphenol Aerospace Operations, Sidney, NY
(Phone: 607-563-5011) or Amphenol Power Solutions, Fraser, MI
(Phone: 586-294-7400)

Standard and Custom-Developed Solutions

- In addition to the various standard sizes of RADSOK® components, custom-developed solutions are also available. Amphenol has the global design, engineering and manufacturing resources to provide RADSOK® sockets pressed into busbars, crimped to cables, assembled into connectors, assembled into customer or Amphenol designed specialized electrical devices, or as stand-alone components. Amphenol also manufactures a full compliment of mating pin contacts for any application.
- Steady-state current capacities for standard RADSOK® products range from 50 amps to over 1000 amps.
- Standard contact plating is typically Silver (Ag) although many other plating specifications may be used for your application.
- Amphenol connectors with RADSOK® contacts are offered with a variety of positive-locking features that insure and maintain fully-mated connections.
- Sealing (Sealtac™) and high voltage hot break options are available within the RADSOK® itself or within a very wide range of IP rated connector housings to provide environmental protection to the contact area.

The Wide Variety of RADSOK® Applications include:

- Replacement of ring terminals (lugs) on threaded studs
- High current PCBs
- Communication towers
- Backplane power
- Uninterrupted power supplies
- Fuel cell connectors
- AC inductive drive motors
- Power distribution modules
- Busbar terminations (plug-in hardware/modules)
- “Pluggable” breakers
- Battery terminals
- Contacts with RADSOK® technology give 50% more ampacity.
- RADSOK® contacts can be designed to fit any housing
- Combinations of RADSOK® and high speed copper contacts in the same interconnect package

Amphenol operates quality systems that are certified to ISO9001:2000 by third party registrars.

(ESD) Protected Connectors

Protection from Electrostatic Discharge

Amphenol has developed cylindrical and rectangular connectors which protect sensitive components from Electrostatic Discharge (ESD) without diodes, varistors, gas tubes, or "experimental" semi-conductive materials.

These connectors utilize the Faraday Cage principal to shunt electrostatic discharge events to the conductive enclosure on which the connector is mounted, thus never allowing the high voltage, high current discharge event to reside on any contacts.

The ESD protected connectors have the same physical envelope as their standard counterparts, and do not require special mounting or terminating techniques. All of the contacts remain fully functional, and electrical characteristics such as capacitance are not effected.

Product Features:

- Connector envelope identical to unprotected design for most applications
- Exceeds protection requirements of IEC 801-2 and MIL-STD-1686:
- Ensures that all components within a conductive enclosure will be subjected to a maximum of 10V during electrostatic discharges between –26 KV and +26 KV
- Voltage observed on contacts during ESD events – <10V (at 1 megohm)
- Current observed on contacts during ESD events – <100 milliamperes (at 2 ohms)
- Response time – instantaneous (voltage and current are maximum values)
- Maximum ESD voltage – tested to ±26KV
- No capacitive loading
- Eliminates the need for discrete components (such as diodes) and maximizes printed circuit board real estate for equipment housed in conductive enclosures which require ESD protection as free-standing units
- Operating voltage of connectors not effected for most designs
- Pulse life – infinite

What is Electrostatic Discharge (ESD)?

Electrostatic Discharge (ESD) is the rapid transfer of a static electric charge from one body to another. A static electric charge consists of either a surplus or depletion of electrons on a body, which gives that body a potential or voltage relative to ground (or another body). The discharge is extremely fast (less than 1 nanosecond risetime) and the current flow may exceed 100 amps!

Static electricity is normally the result of two materials transferring charges when rubbed or separated, such as shoes scuffing across a dry carpet, or sheets of untreated plastic being separated. This phenomena is commonly referred to as the triboelectric effect.

The voltage developed due to the triboelectric effect depends on the materials involved, the quantity and type of contact, and relative humidity. In a dry environment a person can accumulate a charge of up to 25 KV! In a moist environment a person's potential is reduced due to the effect of moisture on the insulating properties of materials.

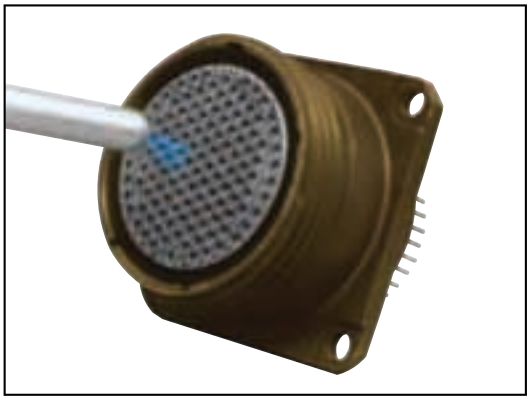

ESD Testing on MIL-DTL-38999, Series III Filter Cylindrical Connector (Actual Photo)

What is a Faraday Cage?

A ***Faraday cage*** is a conductive enclosure. It may be solid in form such as a sheet–metal enclosure, or it may be full of apertures, such as a wire cloth box. When a charge is placed on a faraday cage the electrons which make up the charge, having like polarity, try to position themselves as far as possible from each other. This places the electrons on the outer surface of the enclosure, leaving the inner surface uncharged. The charge on the outer surface does not induce a charge on any neutral object inside of the faraday cage, and therefore does not try to transfer itself onto the internal object. Neutral objects (such as IC's) inside of a faraday cage are thereby protected from ESD activity external to the faraday cage.

The voltage and current observed on neutral objects within a faraday cage during ESD events are due to the secondary effects of ESD. These include Electromagnetic Interference (EMI), magnetic and electrical field coupling. The faraday cage of the Amphenol ESD Protected Connectors has been designed to minimize these effects.

The Amphenol® ESD Protected Connectors

The Amphenol ESD Protected Connectors have a faraday cage at the mating interface. The faraday cage has been specifically designed to intercept electrostatic discharges from the contacts in the unmated state, while maintaining each contact's isolation when the connector is mated. When the ESD Protected Connectors have been mounted to a conductive enclosure, a faraday cage is created which will protect components located within the enclosure from electrostatic discharges. This eliminates the need for discrete components such as diodes and gas discharge tubes, and saves printed circuit board real estate. Amphenol ESD Protected Connectors have also been applied to Line Replaceable Modules (LRM).*

* For further information on Amphenol LRM connectors with ESD protection see page 434.

Custom Hermetic Connectors

Amphenol glass sealed hermetic connectors are available in a wide variety of Mil-Spec and custom configurations.

Features and benefits:

- Leakage rate of 1x10-7 cc of He/sec or less
- Fused glass insert in steel shell

Options include:

- Special flanges
- PC board mounting stand-offs
- PC board mounting tails
- EMI filtering
- Through bulkhead configurations
- Crimp termination

Applications:

- Pressurized avionics boxes
- Environmental sealed boxes
- Moisture sealing for industrial equipment and missiles

(Contact your Amphenol representative for information regarding custom configurations)

Epoxy Sealed Connectors

Amphenol epoxy sealed connectors are a light weight alternative to glass sealed hermetic connectors for use in avionics and other weight-sensitive applications where a high level of sealing is required. Epoxy sealed connectors are an optimal solution when increasingly stringent water immersion requirements must be met in radio and vetronics applications.

- Same epoxy as used in EMI filter connectors
- Less than 1x10-4 cc of He/sec leak rate
- Maintained after temperature cycling, 5 cycles -55 to +125°C
- Custom designs available with lower leak rates upon request
- Available in standard and custom configurations including PC tail, solder cup, and crimp termination, board mounting stand-offs, and through bulkhead configurations.

(Contact your Amphenol representative for information regarding custom configurations)

Durmalon Connector Finish
Alternative to Cadmium

DURMALON™ Alternative to Cadmium

Commercial, industrial & military markets are rapidly moving away from hazardous materials such as Cadmium (Cd) & Hexavalent Chrome (Cr6+). Amphenol is offering an alternative finish & process that complies with all customer requirements tied to these specifications.

Cd & Cr6+ have been applied to numerous components of land, sea and air weapon systems for many years & provides sacrificial corrosion protection for steels and excellent lubricity for threaded applications. However, Cd is a toxic metal and a known carcinogen. In addition, Cd is plated from an aqueous bath containing cyanide salts. Cr6+ is a known carcinogen as well.

MIL-DTL-38999 rev L, controlled by the Defense Supply Center Columbus (DSCC) has established 3 new service classes as alternatives to Cd.

- Class P Pure Dense Electrodeposited Aluminum (Alumiplate)
- Class T Nickel Fluorocarbon Polymer (Ni-PTFE)
- Class Z Zinc-Nickel (Zn-Ni)

Amphenol is using this & the European Union directive 2002/95-EC-RoHs (Restriction of Hazardous Substances) as direction to qualification for all domestic, global, commercial, industrial & military specifications requiring the reduction or elimination of these hazardous materials.

At this time, we are focusing on Ni-PTFE, Durmalon, our internal part number coding “DT” finish. Amphenol Durmalon is now QPL’d (qualified) by DSCC to MIL-DTL-38999 Rev L, Series III, Class T. The finish is also RoHS compliant due to the NON-use of Cr6+.

Amphenol also continues to develop a heavy duty Durmalon (Amphenol “DX” p/n code designation) to support the JSF, F-35 program. This plating is intended to meet the additional higher corrosive Sulfur Dioxide (SO2)/salt fog requirements of JSF.

Also under development & qualification testing is Zinc-Nickel (Amphenol “DZ” p/n code designation) to comply with the new D38999 class “Z” finish requirements.

Amphenol’s Durmalon like Olive-Drab Cadmium plating (Class W), meets 500 hours of Salt Spray, combined with 500 mating cycles and maintains less than a 2.5 millivolt drop shell-to-shell conductivity. Of all platings tested, Durmalon has been proven to meet these requirements and is also being tested under development & showing positive results for the following:

- Sulphur Dioxide (SO2) corrosion requirement of the JSF Program
- Potassium Formate- Deicer fluid testing performed by Boeing

Please consult the factory for availability.

Applications

Interest for non-hazardous alternative finishes is gaining momentum & many customers are currently using Durmalon. As mentioned above, Amphenol is developing a “Heavy Duty” version of Durmalon to comply with the higher level requirements by Lockheed Martin for the F-35, Joint Strike Fighter (JSF) program. The requirements include 2000 hrs of neutral salt fog exposure & an acidic salt fog environment exposure with added sulfur dioxide (SO2) for 336 hrs. Please contact the factory for availability.

Testing

Amphenol Aerospace has performed extensive testing on 14 alternative platings with the most consistent performer being Durmalon. Please contact Amphenol Principal Engineer Eric Shepler at eshepler@amphenol-aao.com for more information or test data on Durmalon.

Requirements	Cadmium	Durmalon™	Zinc Nickel	Alumiplate℠	Zinc Cobalt	Stainless Steel	Electroless Nickel
Coupling Torque Post 500 hr salt	■	■	NA	■	NA	■	NA
Shell-to-Shell Conductivity <1 millivolts							■
<2.5 millivolts	■	■	■	■			
<10 millivolts	■	■	■	■		■	
Cycles of Durability 500 mates	■	■	■	■		■	■
Salt Spray 48 hours	■	■	■	■	■	■	■
Dynamic-500 hours	■	■	■	■		■	
1000 hours		■*					
Temperature Rating 175° C	■	■	■	■	■	■	■
200° C		■	■	■		■	■
>200° C						■	
Non-Reflective	■	■	■	■	■		
RoHs Compliant		■	TBD		■	■	■
Non-Magnetic	■	■	■	■	■	■	■
Available on Composite	■	■	■	■	■		■
Cr6+ Presence	■		TBD	■	**		**
Sulfur Dioxide Resistance F35-336 hours	■	*					
Aviform De-Icing Fluid		TBD				■	

** Durmalon XP See “applications”*
***Meets EU RoHs/ELV hexavalent chromium maximum concentration value (MCV) of 1000ppm (0.1% w/w) per homogenous material.*
Notice: Specifications are subject to change without notice.

Amphenol Integrated Systems
The Leading Choice for Packaging Solutions

Amphenol Aerospace

Amphenol is the leading manufacturer of integrated system solutions for the military and aerospace markets. Amphenol Integrated Systems is the synergistic combination of three key divisions:

- **Amphenol Aerospace**
  - **Circular Interconnects**
  - **Rectangular Board Level Products**
- **Amphenol Backplane Systems**
- **Amphenol Printed Circuits**

We have over 60 years of experience in the military and aerospace market and our commitment to the industry is exemplified in everything we do. With our dedicated facilities in Nashua, New Hampshire; Sidney, New York; and Nogales, Mexico, Amphenol Integrated Systems is the military and aerospace industries premier choice for system-level packaging solutions. We understand the relationship between the interconnect, the printed circuit board, the backplane and the chassis. We use that knowledge to provide complete solutions for our customers.

Amphenol Backplane Systems and Printed Circuit Boards

Amphenol Products-Performance in the Most Demanding Environments

We lead the industry by offering the elements necessary for success in the military and aerospace OEM supply chain:

- Design and Modeling
- Applications Engineering
- Fabrication
- Value-added Assembly
- Test

Coupled with the largest interconnect offering in the market, Amphenol supports all of your system-level needs.

Integrated System Packaging

Amphenol can provide systems solutions - everything you need inside and outside the box: Interconnect products, printed circuit boards, backplane assemblies, heat-sink and metal enclosures. Amphenol also provides value added assembly including bussing: full system assembly including chassis build and sub-system integration and testing.
An example integrated system box, shown below, includes the following Amphenol interconnect products:

- Circulars: D38999 circular connectors with MT Fiber Optics, RJ Field Connectors
- Rectangulars: LRM interconnects, NAFI connectors, UHD Connectors
- Rectangulars: ARINC 600 connectors, Micro-D Connectors
- Rectangulars: HDB3 High Density Brush contact Connectors
- Backplane Systems, Flex Circuitry, metal enclosure

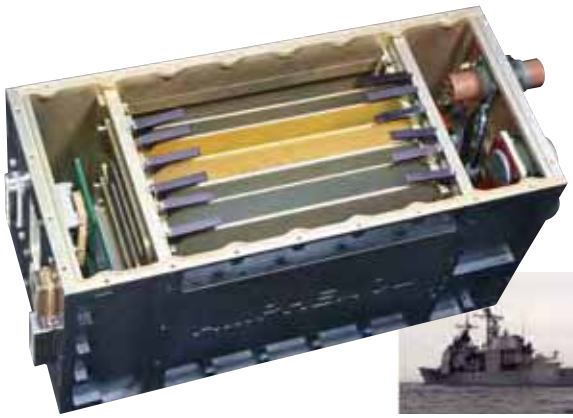

Amphenol's Solutions - The Pinnacle of Technology
Some of the world's most demanding programs rely on Amphenol's packaging solutions, including:

- **F-35**
- **F-22**
- **F-18**
- **MIDS/JTRS Radio**
- **Theater High Altitude Air Defense Radar (THAAD)**
- **AH-64 Apache**
- **787 Dreamliner**
- **Future combat Systems**
- **DDG-51**
- **DDG-1000**

Integrated Systems solutions are found aboard commercial airliners, helicopters, Navy and Air force Fighters, C4I electronics, missiles, ground vehicles, Homeland Security Systems, and Navy warships.

Wide range of Circular Interconnects

Amphenol has the broadest circular interconnect offering in the market place. Amphenol meets or exceeds the following major military specifications for circular connectors:

- MIL-DTL-38999
- MIL-DTL-26482
- MIL-DTL-83723
- MIL-DTL-5015
- MIL-DTL-22992
- MIL-C-81511

MIL-DTL-5015

A wide range of MIL-DTL-5015 products not covered in this catalog is available online at www.amphenol-industrial.com (Catalog 12-020) or refer to page 198 in the MIL-DTL-5015 Crimp Rear Release section of this catalog.

MIL-DTL-22992

Heavy Duty rugged series of connectors, “Class L”, QWLD and QWL are not covered in this catalog. See pages 429 and 430 for brief overviews of these series.

MIL-DTL-26482

Additional MIL-DTL-26482 Series 1 circular connectors not covered in this catalog is available online at www.amphenol-industrial.com (Catalog 12-070) or refer to page 120 in the MIL-DTL-26482 Matrix 2 section of this catalog.

MIL-DTL-81511

General duty circular connectors 348 series, MIL-C-81511, are not covered in this catalog. See page 431 for brief overview.

This Catalog covers the majority of Amphenol Aerospace Circular Interconnects. Amphenol also offers many connector choices that serve Industrial Markets such as Process Control, Rail Mass Transit, Heavy Equipment, Energy, Petrochemical, and Power Generation. Some Commercial Circular and Industrial interconnects products are covered on the next pages.

Amphe-Lite™, Non-MS Commercial 38999 Type

Reference Catalog 12-094

APPLICATION	STANDARDS/ REQUIREMENTS	COUPLING/ MOUNTING	CONTACT TERMINATION	PERFORMANCE ENVIRON./ELECT.
AL Series Commercial 38999, Series III type connector for higher performance industrial usage.	Offers 38999 type high performance capabilities for severe environment applications, yet is cost effective enough for general duty and non-environmental use.	Threaded coupling. Quickly, completely mates in one 360° turn of the coupling nut. Self locking - lockwiring is eliminated. Universal mounting holes for front or rear mounting, locksmith metal keying to aid in blind mating.	Crimp termination. Recessed pins (100% scoop-proof feature minimizes contact damage).	Operating temp. from –55°C to +125°C. IP67 rating for environmental sealing. Class F provides excellent EMI shielding. Class U provides a non-conductive finish. Composite shells resist severe corrosion. Operating voltage to 900 VAC (RMS) at sea level.

OPTIONAL FEATURES

- 3 shell styles, 59 insert patterns.
- Twinax, coax, filter contacts and fiber optic termini can be incorporated - ideal for communications equipment.
- Ground plane version and high decoupling version available.
- Non-magnetic version available.

MARKETS

- Communications
- Automotive
- Medical Equipment

Amphenol Aerospace

GT Series, Reverse Bayonet

Reference Catalog 12-024

APPLICATION	STANDARDS/ REQUIREMENTS	COUPLING/ MOUNTING	CONTACT TERMINATION	PERFORMANCE ENVIRON./ELECT.
GT Series Heavy duty, rugged connector, environmentally resistant. Preferred connector for mass transit. Also used in mil-aero applications such as military vehicles.	Utilizes MIL-DTL-5015 inserts. UL recognized. Intermateable with VG95234 connectors.	Reverse bayonet coupling (quick mating, audible, visual and tactile full mating indicators). Rated to 2000 couplings min. No lockwiring required.	Crimp or solder termination.	Operating temp. from –55°C to +125°C. With Viton inserts: –50°C to +200°C. Resilient inserts provide high dielectric strength and moisture barrier. IP67 performance in environmental versions. Resilient rubber covers provide higher shock and vibration capabilities. Operating voltage to 3000 VAC (RMS) at sea level.

OPTIONAL FEATURES

- Over 40 varieties of shell styles and backend accessory combinations.
- Optional insert materials: Neoprene, Viton*, or low smoke/flame retardant.
- Variety of conductive and non-conductive platings including non-cadmium.
- Resilient cover coupling nuts available for added damage protection and increased gripping surface.
- Many contact types are available, including both gold and silver plating, and alternate crimp barrel sizes.
- Available with RADSOK® High Power Contacts- see page 429

MARKETS

- Rail/Mass Transportation
- Power Generation, Petro-Chemical
- Heavy Equipment, Geophysical
- Power and Control Lighting Trusses
- Military Vehicles

GT-PC Series for High Power Applications

Reference Catalog 12-024

APPLICATION	STANDARDS/ REQUIREMENTS	COUPLING/ MOUNTING	CONTACT TERMINATION	PERFORMANCE ENVIRON./ELECT.
GT-PC Series Same standard features as the GT series, but with "Dead Front" pin contacts, size 0, recessed into the socket insert. Provides higher amperage capability and operator safety by preventing inadvertent contact with a live contact.	UL recognized. Currently available with 5 insert patterns incorporating size 0 contacts.	Reverse bayonet coupling (quick mating, audible, visual and tactile full mating indicators). Rated to 2000 couplings min. No lockwiring required.	Crimp termination.	Same performance as GT series, but special "Dead Front" recessed contacts provide higher amperage levels - up to 100 amps per contact. These special contacts also prevent accidental electrical shocks to technicians. "First Mate/"Last Break" features on one or more of the pins provide additional operator safety.

OPTIONAL FEATURES

- Same shell styles offered as in standard GT series family.
- Currently 5 insert patterns available.
- Wide selection of backend accessories available.

MARKETS

- High Voltage Power Distribution

GTC-M Series - The GT with Metal Clip Inserts

Reference Catalog 12-024.
Reference PDS-181
(Product Data Sheet)

APPLICATION	STANDARDS/ REQUIREMENTS	COUPLING/ MOUNTING	CONTACT TERMINATION	PERFORMANCE ENVIRON./ELECT.
GTC-M Series Combines the GT reverse bayonet shell and the rear release metal clip retention system which is used in the Amphenol®/Matrix® MIL-DTL-5015 connector. Provides easier insertion/ removal of contacts and improved environmental sealing.	Intermateable and intermountable with standard GT series.	Reverse bayonet coupling (quick mating, audible, visual and tactile full mating indicators). Rated to 2000 couplings min. No lockwiring required. Captivated coupling nut assembly allows unmating without the rear accessories attached.	Crimp or solder termination.	Operating temp. from –55°C to +200°C. Completely environmentally sealed with contact seals, gaskets, wire seals and insert-to-shell seals. IP67 rating for environmental sealing. Operating voltage to 3000 VAC (RMS) at sea level.

OPTIONAL FEATURES

- 7 shell styles offered with all insert patterns available from standard GT series family.
- Wide selection of backend accessories available.

MARKETS

- Mass Transportation
- Power Generation, Petro-Chemical
- Heavy Equipment, Geophysical

Pyle Star-Line®

Reference Catalog 12-054

APPLICATION	STANDARDS/ REQUIREMENTS	COUPLING/ MOUNTING	CONTACT TERMINATION	PERFORMANCE ENVIRON./ELECT.
Heavy duty, environmental circulars for high amperage and high density control and instrumentation applications. Rugged, double lead threaded. ZP/ZR designations.	Equals or exceeds MIL-DTL-5015 E and R specifications. UL listed and CSA listed for circuit breaking capability.	Double lead Acme threads provide complete coupling in one turn of the coupling nut, and do not clog under adverse weather conditions. Large wiring space provided in cable housings and conduit fitting bodies.	Solder, crimp and pressure terminals. Circuit breaking power and control types.	Operating temp. from –67°F to +257°F. IP67 rating for environmental sealing. Hard anodic coating provides dielectric strength with heat and corrosion resistance. Up to high amperage of 1135 amps at 1000VAC or DC rating available.

OPTIONAL FEATURES
- 5 shell styles with over 150 insert patterns.
- 3 retention styles with captive contacts or insertable/removable contacts.
- Contact inserts and adapters are interchangeable and reversible to suit special needs.
- Thermocouple contacts available.
- Variety of backend accessories including basket weave cable grips, straight or angled adapters, and receptacle mounted to junction boxes.

STAR-LOK® SERIES ALSO AVAILABLE. Reference Catalog 12-054.
- High power and rugged features of the Star-Line series, but with spring loaded reverse bayonet coupling.
- Same choices of inserts, contacts and hardware as Star-Line.
- Solder, crimp and pressure terminals. Circuit breaking power and control types.

MARKETS
- Mass Transportation
- Automotive Tooling
- Co Generation Equip.
- Oil Exploration & Production Equip.
- Motor Operated Valves

Pyle Star-Line EX®

Reference Catalog 12-054

APPLICATION	STANDARDS/ REQUIREMENTS	COUPLING/ MOUNTING	CONTACT TERMINATION	PERFORMANCE ENVIRON./ELECT.
Heavy duty, environmental circulars for high power applications with harsh/ potentially explosive environments. Rugged, double lead threaded. EX designations.	Hybrid form of the Star-Line series with higher temperature ranges. Cenelec Certified for use in Zone 1-IIc hazardous environment. EX Certificate #03ATEX 1101X	Double lead Acme threads provide complete coupling in one turn of the coupling nut, and do not clog under adverse weather conditions. Large wiring space provided in cable housings and conduit fitting bodies.	Solder, crimp and pressure terminals. Circuit breaking power and control types.	Operating temp. from –65°C to +257°C. IP67 rating for environmental sealing. Hard anodic coating provides dielectric strength with heat and corrosion resistance. Up to high amperage of 1135 amps at 1000VAC or DC rating available.

OPTIONAL FEATURES
- 5 shell styles with same insert patterns of Star-Line series.
- Variety of backend accessories including basket weave cable grips, straight or angled adapters, and receptacles mounted to junction boxes.
- Can be terminated onto unarmored or armored and sheathed cables built to several popular standards. Custom cable assemblies available.

MARKETS
- Mass Transportation
- Petro-chemical
- Off-shore oil drilling
- Automotive paint booths
- Aircraft Refueling Pits
- Pharmaceutical Mfg. Equip.

Amphe-Power™ P-Lok Connectors

Reference Brochure SL-391

Amphe-Power P-Lok

Amphe-Power 14mm P-Lok

APPLICATION	STANDARDS/ REQUIREMENTS	COUPLING/ MOUNTING	CONTACT TERMINATION	PERFORMANCE ENVIRON./ELECT.
Amphe-Power P-Lok connectors are designed for high amperage usage in industrial and transportation applications.	P-Lok and MIL-DTL-5015 characteristics, enhanced with RADSOK for higher amperage usage.	Spring pressure push-pull mating of the P-Lok series. Audible and tactile conformation of positive locking.	Crimp termination. Amphe-Power P-Lok connectors have RADSOK contacts, available in size 8 (69 amps), size 4 (120 amps), and size 0 (250 amps). The 14mm Amphe-Power design has size 28 shell, and a single crimp pin contact in 2/0 or 4/0 AWG size. The receptacle has the 14mm RADSOK® socket with crimp or busbar-mount terminations available.	Meets same performance levels as P-Lok. RADSOK socket is rated for 500A continuous duty. Environmentally sealed to IP67.

OPTIONAL FEATURES
- Standard connector options available, electroless nickel finish on the shell.
- Dead-front pin contacts are available.
- UL recognized leakage paths is an option.
- Touch-proof sockets are available.
- Custom over-molded cable solutions. Neoprene, Hypalon and other materials are available in both straight and right-angle wire orientations.

MARKETS
- Power Generation, Petro-Chemical
- Rail/Mass Transportation
- Fuel Cells, Energy Storage, Power Motors
- Hybrid Vehicles

Amphe-Power™ GT, Amphe-Power™ 5015 (AC)

Reference Brochure SL-391

Amphe-Power GT

Amphe-Power 5015 AC

APPLICATION	STANDARDS/ REQUIREMENTS	COUPLING/ MOUNTING	CONTACT TERMINATION	PERFORMANCE ENVIRON./ELECT.
High amperage capability connectors designed for the most demanding industrial and transportation applications. Amphe-Power GT designation: GT( )RDS Amphe-Power AC designation: AC( )R( ) designation	GT and 5015 (AC) connectors enhanced with RADSOK® contacts (hyperbolic, stamped grid configuration within the socket) that handle up to 150% higher amperages than standard contacts.	Amphe-Power GT is reverse bayonet coupling. Amphe-Power 5015 is threaded coupling.	Crimp termination. RADSOK® contacts, available in size 8 (69 amps), size 4 (120 amps), and size 0 (250 amps). For RADSOK® contact advantages, see page 79.	Amphe-Power connectors are all 5015 type performance. Operating temp. from –55°C to +125°C. GT and 5015 styles are IP67 similar performance in environmental versions. Current Amphe-Power lines support from 50A to over 500A continuous duty.

OPTIONAL FEATURES

- Most shell styles available in GT family and in AC 5015
- Hybrid arrangements with RADSOK and power contacts tailored to meet customer needs.

MARKETS

- Power Generation, Petro-Chemical
- Mass Transportation

* Amphenol AC Threaded Series- Reference catalog 12-025
Amphenol AC-B Reverse Bayonet Series - Reference 12-027

Amphe-Power™ Composite Amphe-GTR

Reference Brochure SL-391

APPLICATION	STANDARDS/ REQUIREMENTS	COUPLING/ MOUNTING	CONTACT TERMINATION	PERFORMANCE ENVIRON./ELECT.
Amphe-GTR GT connector with RADSOK® high amperage sockets. The plug shell, coupling nut, receptacle and hardware are all high performance molded composite material.	Listed per UL1977/UL1682/ UL817. Meets all the specifications for high power process control and server applications.	Reverse bayonet coupling.	Compression (setscrew) wire termination to the 4/6AWG or 8/10AWG conductors allows easy field replacement of pin or socket contacts, or complete plug and receptacle assemblies, without requiring specialized tooling.	Meets same performance levels as GT series.(See page 427). RADSOK® contacts enable increased current ratings to 120A on individual contacts. Utilizes a standard PG adapter to achieve IP67 seal rating. Flammable rated to UL94V-0.

OPTIONAL FEATURES

- Currently available in shell size 32 with 4 or 5AWG contacts. Consult Amphenol Power Solutions for future sizes and patterns.

MARKETS

- Factory Automation
- Rail/Mass Transportation
- Process Control

Class "L", MIL-DTL-22992

Reference Catalog 12-052

APPLICATION	STANDARDS/ REQUIREMENTS	COUPLING/ MOUNTING	CONTACT TERMINATION	PERFORMANCE ENVIRON./ELECT.
Class L Military MS90555 and Proprietary designations. Heavy duty, rugged, environmental circulars designed to meet the heaviest electrical loads for military or industrial applications. Current ranges of 40 to 200 amps, conductor sizes 6 to 4/0. Automatic grounding for safety.	Qualified to MIL-DTL-22992. Within the controlled parameters of mil-spec - shell size relationship to current carrying capacity to reduce the possibility of inadequate wiring for heavy electrical loads.	Double stub threaded per MIL-STD-1373 for fast coupling, easy cleaning. 5 key polarizing system assures that circuits with incompatible power characteristics (voltage, phase and frequency) are not mated. Rated to 500 complete mating/ unmating cycles.	Crimp termination. Contacts can be soldered.	Operating temp. from –55°C to +125°C. Unique arc quenching capability provides a positive safety feature if connectors are inadvertently disconnected under load. Programmed coupling sequence - grounding and neutral contacts engage before power contacts. Grommets and seals provide waterproofing. Rugged shells are resistant to vibration, high impact, shock and corrosion.

OPTIONAL FEATURES

- Direct current or single/three phase, 60/400 Hertz alternating current.
- 4 shell styles with 7 insert patterns that facilitate large conductors.
- Accessories have left hand threads to minimize cable twisting, wire breakage, accidental connector disassembly.
- Conductive and non-conductive finishes available.

MARKETS

- Military ground vehicles/Mobile facilities
- Geophysical/Heavy equipment
- Power distribution systems

QWLD, MIL-DTL-22992

Reference Catalog 12-052

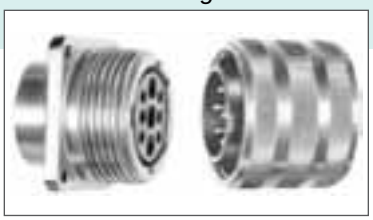

APPLICATION	STANDARDS/ REQUIREMENTS	COUPLING/ MOUNTING	CONTACT TERMINATION	PERFORMANCE ENVIRON./ELECT.
QWLD Military MS17343 and Commercial designations. Heavy duty, rugged, environmental circular designed for power and control circuits. Increased shell size compared to standard 5015 connectors for greater durability. Industrial version available.	MS approved versions qualified to MIL-DTL-22992. Incorporates MIL-DTL-5015 inserts plus special arrangements. Class C: pressurized. Class R: environmental.	Double stub threaded per MIL-STD-1373 for fast coupling, easy cleaning. 5 key polarization. Rated to 500 complete mating/ unmating cycles.	Crimp or solder termination.	Operating temp. from –55°C to +125°C.Resilient inserts provide high dielectric strength and moisture barrier. Sealing gaskets at every joint for waterproofing. Rugged shells are explosion proof and are resistant to vibration and shock, hydraulic fluids, oils and salt spray corrosion. Operating voltage to 3000 VAC (RMS) at sea level.

OPTIONAL FEATURES

- 7 shell styles with over 300 insert patterns that include both MS and special patterns for a wide variety of multiconductor cables.
- Coax and thermocouple contacts available.
- Accessories have left hand threads to minimize cable twisting, wire breakage, accidental connector disassembly.
- Alumilite hard anodic finish for abrasion and corrosion resistance or conductive cadmium plate finish.

QDP SERIES ALSO AVAILABLE - Consult Amphenol for further information.

- QWLD type shells with miniature crimp (PT-SE) inserts.
- Applications which require heavy duty shells, rugged finish, higher contact density.

MARKETS

- Military ground vehicles/Heavy equipment
- Geophysical
- Portable lighting systems
- Power distribution systems

QWL, MIL-DTL-22992 Type

Reference Catalog 12-053

APPLICATION	STANDARDS/ REQUIREMENTS	COUPLING/ MOUNTING	CONTACT TERMINATION	PERFORMANCE ENVIRON./ELECT.
QWL Series Commercial only. Heavy duty, rugged, environmental circulars designed to be more compact. Provides an economical alternative to military qualified designs for heavy duty connectors.	Commercial styles with performance levels that equal to MIL-DTL-22992. Incorporates MIL-DTL-5015 inserts plus special arrangements.	Double stub threaded per MIL-STD-1373 for fast coupling, easy cleaning. Single keyway polarization. Rated to 500 complete mating/ unmating cycles.	Crimp or solder termination.	Operating temp. from –55°C to +125°C. Resilient inserts provide high dielectric strength and moisture barrier. Sealing gaskets at every joint for waterproofing. Rugged shells are resistant to vibration and shock, hydraulic fluids, oils and salt spray corrosion. Operating voltage to 3000 VAC (RMS) at sea level.

OPTIONAL FEATURES

- 8 shell styles with over 300 insert patterns that include both MS and special patterns for a wide variety of multiconductor cables.
- Coax and thermocouple contacts available.
- Accessories have left hand threads to minimize cable twisting, wire breakage, accidental connector disassembly.
- Alumilite hard anodic finish for abrasion and corrosion resistance or conductive cadmium plate finish.

MARKETS

- Instrumentation/Control/Machine Tool
- Communications
- Geophysical
- Nuclear Industry

Aquacon Immersible Connectors

Reference Catalog 12-140

APPLICATION	STANDARDS/ REQUIREMENTS	COUPLING/ MOUNTING	CONTACT TERMINATION	PERFORMANCE ENVIRON./ELECT.
AJ Series Designed for underwater or fluid immersion applications, offering 1500 psi sealing capability assured by metal to metal threaded coupling and "O" ring seals.	MIL-DTL-38999 Series III type, with enhanced features for moisture sealing and corrosion resistance.	Threaded coupling. Quick mating with one 360° turn of the coupling nut. Visual mating indicator.	Crimp termination. Recessed pins (100% scoop-proof feature minimizes contact damage). Solder termination for hermetic receptacles.	Operating temp. from –55°C to +200°C. Specially designed aluminum bronze coupling nut and type 316 stainless steel shells resist corrosion and provide a 1500 pressure withstanding capability. Hermetic style inserts provide 1 x 10^{-6} cc/sec leakage rate. Rear accessory thread provides for the use of EMI hardware or environmentally resistant molded cable terminations.

OPTIONAL FEATURES

- Straight plug and either jam nut or square flange receptacle styles offered.
- Over 40 insert arrangements available.
- Hermetic receptacles are available with inserts of fused compression glass.

MARKETS

- Oceanic and fluid immersion applications.

67 Series, Connectors

Reference Catalog 12-023

APPLICATION	STANDARDS/ REQUIREMENTS	COUPLING/ MOUNTING	CONTACT TERMINATION	PERFORMANCE ENVIRON./ELECT.
67 Series Environmentally sealed, medium size connector. Designed to meet MIL-DTL-5015 specifications, but lighter weight, with gray anodized aluminum shell and bayonet coupling.	Meets temperature ranges and moisture resistance of MIL-DTL-5015 requirements with potting. Miniaturized size (approx. half the weight of standard MIL-DTL-5015 connectors). UL approved.	Spring-loaded bayonet coupling.	Crimp rear insertable, rear releasable contact termination.	Operating temp. from –55°C to +125°C. IP67 rating for environmental sealing. Operating voltage to 1800 VAC (RMS) at sea level.

OPTIONAL FEATURES
- 5 shell styles with 17 insert patterns.
- 4 construction classes for unitized back end grommet or optional wire sealing, clamping and potting styles.

MARKETS
- Military Aircraft
- Missiles

165 Series, Connectors

Reference Catalog 12-023

APPLICATION	STANDARDS/ REQUIREMENTS	COUPLING/ MOUNTING	CONTACT TERMINATION	PERFORMANCE ENVIRON./ELECT.
165 Series Environmentally sealed, medium size connector. Designed to meet MIL-DTL-5015 Class C specifications, but lighter weight, with gray anodized aluminum shell and bayonet coupling.	Meets temperature ranges and moisture resistance of MIL-DTL-5015 requirements with potting. Miniaturized size (approx. half the weight of standard MIL-DTL-5015 connectors). UL approved.	Bayonet coupling.	Crimp rear insertable, rear releasable contact termination.	Operating temp. from –55°C to +125°C. IP67 rating for environmental sealing. O-ring seals in both plug and receptacles make connectors pressure proof and water protected when mated. Operating voltage to 600 VAC (RMS) at sea level.

OPTIONAL FEATURES
- 5 shell styles with 7 insert patterns.
- Styles for jacketed cable attachment or for potting.

MARKETS
- Military Aircraft
- Missiles

348 Series, MIL-C-81511 Series I & II

Reference Catalog 12-093

APPLICATION	STANDARDS/ REQUIREMENTS	COUPLING/ MOUNTING	CONTACT TERMINATION	PERFORMANCE ENVIRON./ELECT.
348 Series M81511 For general duty requirements. Series II is standard length, Series I is longer shell with recessed pins.	MS versions are approved to MIL-C-81511 Series I & II	3 point bayonet coupling and 5 key/ keyway mating	Crimp termination. Series I has recessed pins (100% scoop-proof feature minimizes contact damage).	Operating temp. from –55°C to +200°C. IP67 rating for environmental sealing. Operating voltage to 600 VAC (RMS) at sea level.

OPTIONAL FEATURES
- 4 shell styles available.
- Series I with longer shells, recessed pins offers 28 insert patterns.
- Series II with standard shells offers 16 insert patterns.
- Shielded coax contacts available.

MARKETS
- Military Aerospace
- Military Vehicles
- Commercial Aircraft
- Medical Equipment

Shorting Plugs

Consult your local Amphenol sales office for further information.

APPLICATION	STANDARDS/ REQUIREMENTS	COUPLING/ MOUNTING	CONTACT TERMINATION	PERFORMANCE ENVIRON./ELECT.
Modified plugs or receptacles in all major mil-spec cylindrical connector types. Modified with a tethered eyelet/ braid attachment. Designed to provide specific circuit functions such as safety shorting, electrical commoning and arming.	Available modification design with the following series: MIL-DTL-26482 MIL-DTL-38999 MIL-DTL-5015 MIL-DTL-83723	Available with a tethered eyelet attachment.	Termination is per connector series utilized.	Performance is per connector series utilized.

OPTIONAL FEATURES
- Available with various lengths and attachments to meet customer requirements.

MARKETS
- Missiles

Wide range of Rectangular Interconnects

Amphenol provides an impressive array of Rectangular Connectors to meet the needs of high density systems and interconnect attachments to Printed Circuit Boards. The Low Mating Force Rectangulars have proven performance on the ground, in the air, and at sea. Applications include: M1A2 Abrams, F-16 Falcon, F/A-22 Raptor, F-35 Lightning 11, AIM-132, ASRAAM. The LRM Surface Mount Connectors shown on page 433 & 434 also have met the needs of major programs that include:

F-35, F-16, F-15, F/A-22, F/A-18, B2, JTRS, EH101, Sincgars, ATACMS, M1 Tanks, Grippen, F-117, Harpoon, LANTRIN, AH-64 APACHE, ASRAAM, ATFLIR

Low Mating Force Rectangular Connectors with Bristle Brush Contacts

*Reference Catalog 12-035**

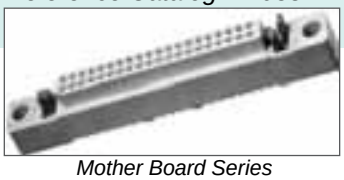

Mother Board Series

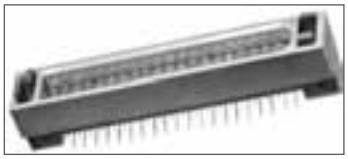

Daughter Board Series

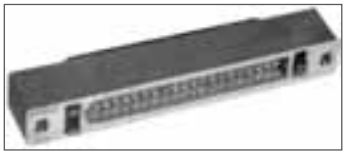

Input/Output Series

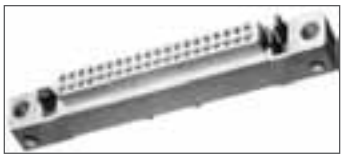

PC Series

APPLICATION	STANDARDS/ REQUIREMENTS	COUPLING/ MOUNTING	CONTACT TERMINATION/ ARRANGEMENTS	PERFORMANCE ENVIRON./ELECT.
Military designation: M55302. Proprietary designations: MB, DB, I/O, PC. Rectangular connectors for attachment to printed circuit boards. Offers high contact density capability. Contain Bristle Brush contacts, consisting of multiple strands of high tensile strength wire that are bundled together to form a "brush-like" contact.	Military versions meet MIL-DTL-55302/166 through /172.	For mounting to printed circuit boards or discrete wires. Body styles offered: • Mother board • Daughter board • Input/Output • PC Flexibility in mating: • Perpendicular boards • End to end boards • Parallel boards • Wire to boards • Card extenders. Polarization keys provide up to 256 possible positions.	Brush contact termination. (Also called B3 contacts). Termination Styles: • PCB through-hole solder • Wire wrap (MB only) • Crimp to discrete wires (Input/Output only) • Solderless compliant into 0.040 plated through holes (MB only) Arrangements: • 2, 3 or 4 row arrangements with 10 to 100 contacts per row in one contact per row increments. • 0.100 inch center to center square grid contact spacing.	Operating temp. from –65°C to +125°C. Connector bodies are high performance glass-filled thermoplastic moldings. Connector configurations are capable of supporting data rates up to 400 Mbps. Bristle Brush contacts provide: • Low mating/unmating forces - 70% to 90% reduction from conventional pin and socket contacts. • Proven durability and long contact life - over 20,000 cycles of mating and unmating without performance degradation. • Multiple points (14-17) of contact per mated contact. • Intermittency-free performance. • Redundant current paths (stable, low resistance). • Proven electrical and gas tight contact sites.

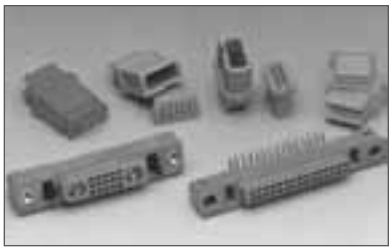

Variety of Rectangular Brush Connectors including smaller styles that have only 10 contacts and are available in color coded moldings.

OPTIONAL FEATURES

- Locking screws and bushings are available for attaching connectors to boards.
- Contact styles available: straight, 90 degree, PCB stub, wire wrap and crimp.
- Small 10-contact arrangement styles are available with option of multi-colored moldings for color coding applications.

MARKETS

- Medical Equipment
- IC Chip Testers
- GPS Systems
- Telecommunications
- Factory Automation
- Military and Commercial Aviation
- Military Vehicles
- Space applications

Low Mating Force High Cycle, Bristle Brush Contacts

As mentioned in the Rectangular section of this publication, the Amphenol Low Mating Force and Amphenol LRM Surface Mount Connectors utilize the Bristle Brush contact design. The Brush or B^3 contact is made up of multiple strands of high tensile wire that are bundled together. 70% to 90% reduction in mating/unmating forces is achieved over conventional contacts, and the brush contact has proven durability and long contact life. Hybrid Low Mating Force connectors can be designed with combinations of brush and coax/twinax/power contacts or fiber optic termini. LRM Surface Mount Connectors can also be designed with combinations of contact styles.

Bristle Brush Contacts - Multiple Stands of Wire are Bundled together to form a "Brush-like" Contact

*Amphenol is developing a combined rectangular catalog 12-R1. 12-035,12-037 and LM-300 will be included in the combined rectangular catalog please contact Amphenol Aerospace for future availability.

Hybrid Rectangular Connectors with Brush/Power/Coax/Fiber Optic Combinations

Reference Catalog 12-035

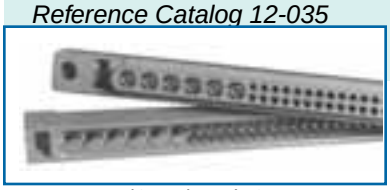

Power/Coax/Brush Contact Combinations

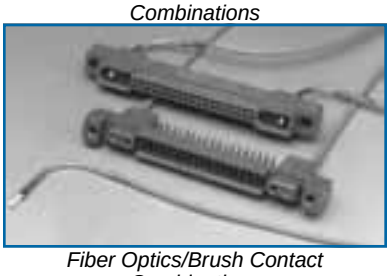

Fiber Optics/Brush Contact Combinations

APPLICATION	STANDARDS/ REQUIREMENTS	COUPLING/ MOUNTING	CONTACT TERMINATION/ ARRANGEMENTS	PERFORMANCE ENVIRON./ELECT.
Rectangular connectors for attachment to printed circuit boards. Offers versatility of combining contact types- power, coax, twinax, fiber optics and Brush contacts in one high density package.	M55302 type rectangular connectors with hybrid contact arrangements. Power contacts and shielded coax or twinax contacts meet M39029 standards. Fiber optic termini meet M29504/4 & /5 standards.	Same as shown above for Low Mating Force rectangular connectors.	Combinations of termination styles: • Brush contacts (as described above) • Power contacts - (standard M39029 size 16 or 12; same as used in MIL-DTL-38999 Series II) • Coax or twinax contacts - (M39029, size 16 and 12) • Fiber optic termini (multi-mode size 16; same as used in MIL-DTL-38999 Series III)	Connector performance and brush contact performance is the same as shown above for Low Mating Force Rectangular connectors. Optical performances of fiber optic termini are the same as termini used in multi-channel circular connectors.

OPTIONAL FEATURES

- Hybrid configurations are available with fiber optics and brush contacts. (See photo above and Fiber Optic section of this catalog).
- Hybrid configurations are available with power and/or shielded (coax or twinax contacts. (See photo shown above).

MARKETS

- All markets of Rectangular Low Mating Force Connectors, as shown above.

LRM Surface Mount Connectors with Brush Contacts

*Reference Catalog 12-037**

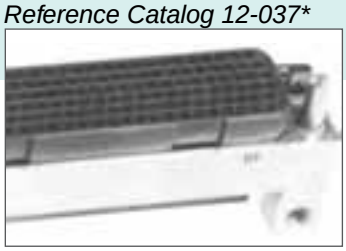

Chevron Grid - Up to 300 Contacts in 6 Rows.

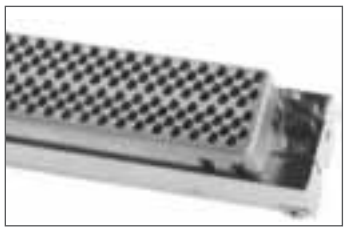

Staggered Grid - Up to 360 Contacts in 8 Rows.

GEN-X Grid - Up to 472 Contacts in 8 Rows.

APPLICATION	STANDARDS/ REQUIREMENTS	COUPLING/ MOUNTING	CONTACT TERMINATION/ ARRANGEMENTS	PERFORMANCE ENVIRON./ELECT.
Line replaceable modular interconnects with very high contact densities, for attachment to printed circuit boards. Contain Bristle Brush contacts, consisting of multiple strands of high tensile strength wire that are bundled together to form a "brush-like" contact. LRM connectors are available in SEM-E and custom form formats.	Uses Bristle Brush contact which meets MIL-DTL-55302. Amphenol staggered grid LRM connector is the F-22 Avionics system connector choice.	Modules: Surface mount/Straddle mount with .0375 spacing between leads, with rows of leads on each side of the module. Can be centered or off-centered mounted. Backplanes: Available with through-hole solder posts or with compliant pins. Polarization: Insert arrangement controls mating orientation. Up to 4096 keying combinations.	Brush contact termination. Chevron Grid: Backplane termination: PCB through-hole solder. Module/LRM termination: Surface mount on 0.025 pitch. Staggered Grid: Backplane termination: PCB through-hole solder or solderless compliant into 0.025 plated-through holes. Module/LRM termination: Surface mount on 0.025 pitch to flex circuit. GEN-X Grid: Backplane termination: PCB through-hole solder or solderless compliant into 0.025 plated-through holes. Module/LRM termination: Surface mount on 0.0375 pitch to rigid flex circuit boards.	Operating temp. from –65°C to +125°C. Suitable for vapor phase soldering. Connector bodies are aluminum alloy with electroless nickel finish. Superior performance under vibration. Connector configurations are capable of supporting data rates in excess of 1 Gbps. Staggered and GEN-X styles are standard with ESD protection - see below. Bristle Brush contacts provide: • Low mating/unmating forces - 70% to 90% reduction from conventional pin and socket contacts. • Proven durability and long contact life - over 20,000 cycles of mating and unmating without performance degradation. • Multiple points (14-17) of contact per mated contact. • Intermittency-free performance. • Redundant current paths (stable, low resistance). • Proven electrical and gas tight contact sites.

Variety of Rectangular Interconnection Products, including LRMs and Low Mating Force Brush Connectors. Also shows the OBIS, Optic-Electric Backplane.

OPTIONAL FEATURES

- Wide range of combinations available for PCB/heat sink accommodations.
- Ruggedized VME64-X is another LRM type connector - See next page.
- Hybrid arrangements with Brush contacts, coaxial, power and fiber optics are available in the Staggered grid style.

MARKETS

- Military and Commercial Aviation
- Military Vehicles and GPS Systems

LRM Connectors with ESD Protection

*Reference Catalog 12-037**

APPLICATION	STANDARDS/ REQUIREMENTS	COUPLING/ MOUNTING	CONTACT TERMINATION/ ARRANGEMENTS	PERFORMANCE ENVIRON./ELECT.
Staggered style and GEN-X style are standard with ESD protection. These connectors utilize the Faraday cage principal to shunt electrostatic discharge events to the conductive enclosure on which the connector is mounted, thus never allowing the high voltage, high current discharge event to reside on any contacts.	Exceeds protection requirements of IEC 801-2 and MIL-STD-1686.	LRM connectors with the added feature of ESD protection eliminate the need for discrete components (such as diodes) and maximizes PC board real estate.	See termination information for LRM connectors above.	Ensures that all components within a conductive enclosure will be subjected to a max. of 20V during electrostatic discharges between –26 KV and +26 KV. Response time is instantaneous. No capacitive loading of signal contacts. The ESD protection is provided on the module/LRM connector in the unmated condition, making it ideal for Level 2 maintenance.

OPTIONAL FEATURES

- (Also see ESD protection in MIL-DTL-38999 Series III connectors - Filter/Transient Protection section. Consult Amphenol for further information.)

MARKETS

- Military and Commercial Aviation
- Military Vehicles and GPS Systems

LRM Surface Mount Connectors with Fiber Optics, RF Modules, Power Supply Modules

*Reference 12-037**

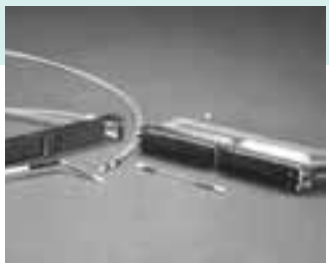

LRM with Fiber Optics

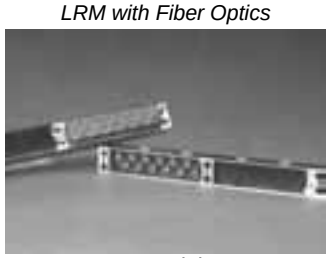

RF Modules

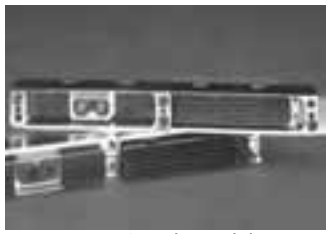

Power Supply Modules

APPLICATION	STANDARDS/ REQUIREMENTS	COUPLING/ MOUNTING	CONTACT TERMINATION/ ARRANGEMENTS	PERFORMANCE ENVIRON./ELECT.
Line replaceable modular interconnects with very high contact densities, for attachment to printed circuit boards. Offers versatility of combining contact types within modules - fiber optics, shielded RF coax, and power contacts one high density package.	High performance LRM connectors with hybrid contact arrangements available.	Same as for LRM connectors shown on preceding page.	Combinations of: • Brush contacts • Fiber Optic LRM - MIL-T-29504 type termini or MT ferrules (2-24 fiber lines per ferrule) • RF Modules with coax contacts - size 16 M39029 type, size 12 for DC-2 GHz or size 8 for DC-32 GHz. Other RF contacts can be accommodated. • Power Supply Modules with custom 270VDC sections utilizing size 22D crimp or compliant pin contacts. Crimp termination size 16, 12 and 8 contacts for high current applications.	Connector performances and brush contact performances are the same as shown on preceding page for LRM connectors. Power supply modules with 270VDC sections are capable of providing corona-free operation at 75,000 ft.

OPTIONAL FEATURES

- Digital/Brush contact inserts can be partially populated to permit high voltage carrying capacity through the electrical PWB, while isolating sensitive electrical signals.
- Differential pair inserts have been specifically designed to support data rates with excess of 1.2 Gbps.
- Also see page 40 for optical backplane interconnection system, that can provide up to 192 fiber optic lines and 80 digital contacts in SEM-E format.

MARKETS

- Military and Commercial Aviation
- Military Vehicles
- GPS Systems

*Amphenol is developing a combined rectangular catalog 12-R1. 12-035,12-037 and LM-300 will be included in the combined rectangular catalog please contact Amphenol Aerospace for future availability.

Pyle LMS Modular Connectors

*Reference Pyle Bulletin LM-300**

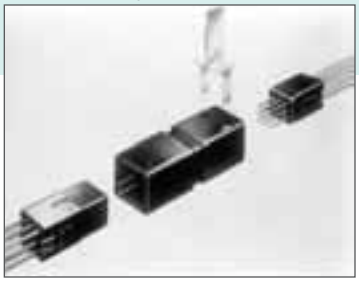

APPLICATION	STANDARDS/ REQUIREMENTS	COUPLING/ MOUNTING	CONTACT TERMINATION/ ARRANGEMENTS	PERFORMANCE ENVIRON./ELECT.
In-line splice connectors - simple, low cost interconnection devices that incorporate LMD modules and contacts.	Supplements the LMD family.	3-piece assembly with 2 styles - standard requiring removal tool, or style with a push button release. Bracket available for panel mounting.	Uses modules common to LMD connectors.	Operating temp. from –55°C to +140°C.

OPTIONAL FEATURES
- Panel mounting bracket available or tie straps.
- Module removal tool available for standard splice style.

MARKETS
- Instrumentation and Testing Equipment

Pyle LMD Modular Connectors

*Reference Pyle Bulletin LM-300**

APPLICATION	STANDARDS/ REQUIREMENTS	COUPLING/ MOUNTING	CONTACT TERMINATION/ ARRANGEMENTS	PERFORMANCE ENVIRON./ELECT.
Rectangular interconnects comprised of housings, modules and contacts, designed to provide flexibility in the assembly of wire harnesses. For attachment to PC boards. Also designs for rack & panel or cable to cable attachment.	Designed for wire harness terminations and to eliminate costly PC board and associated hardware.	Linear module design - for rack & panel or cable to cable applications. Bussing modules - allow for a plurality of circuit networks without extra hardware. Diode modules - sealed for protection; eliminate need for PC boards/ hardware. Relay modules - sealed or unsealed; eliminate need for PC boards/hardware.	Modules incorporate crimp contacts in sizes 8, 16, 20 and 22.	Operating temp. from –55°C to +140°C. Durability: 250 cycles mating and unmating. Module insertion and removal force: 5 lbs. max. Housings, modules and contacts are all ordered separately and require assembly with appropriate LMD accessory tools. Housings of black thermoplastic are U/L rated 94VO flame retardant. Housings of white thermoplastic provide increased resistance to industrial oils and solvents.

OPTIONAL FEATURES
- Variety of module options provide a mix of both active and passive devices within one connector.
- Modules offered either environmentally sealed or unsealed.
- Standard design - housings with 6 bays with choice of four module contact arrangements: 1 #8, 4 #16, 9 #20, 16 #22. PC tail contacts also available.
- Housing material options: black or white thermoplastic.
- Plug and receptacle housings may be front or rear panel mounted.
- Optional keying post provides six position keying capability.
- Optional center jackscrew available for ease of mating and unmating and high reliability under vibration.
- Two types of cable strain reliefs - for either internal or external attachment.

MARKETS
- Instrumentation and Avionics Controls

VME P0/J0 MT Connectors with Fiber Optics

*Reference 12-037**

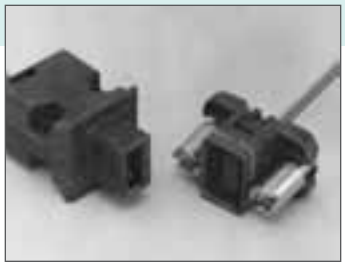

APPLICATION	STANDARDS/ REQUIREMENTS	COUPLING/ MOUNTING	CONTACT TERMINATION/ ARRANGEMENTS	PERFORMANCE ENVIRON./ELECT.
For attachment to VME-64X printed circuit board and cards where fiber optics is required. Used in place of P0/J0 electrical applicable connectors.	Tested to IEEE 1156.1-1993 paragraphs.	Mount to standard VME64X cards and backplanes in the P0/J0 location.	Uses fiber optic "MT" ferrules in the P0/J0 location.	Operating temp. from –55°C to +125°C. Shock: 100g, 6ms, 1/2 sine, 18 pulses Shock: 30g, 6ms, 1/2 sine, 18 pulses Sine Vibration: 10g, 40 min/ axis, 3 axis Random Vibration: $0.15g^2$ Hz, 40 min/axis, 3 axis ESD: 15 KV/150 pF

OPTIONAL FEATURES
- Designed to customer specifications.

MARKETS
- Military and Commercial Aviation
- Military Vehicles
- GPS Systems

*Amphenol is developing a combined rectangular catalog 12-R1. 12-035,12-037 and LM-300 will be included in the combined rectangular catalog please contact Amphenol Aerospace for future availability.

OCEAN CHIPS
Океан Электроники
Поставка электронных компонентов

Компания «Океан Электроники» предлагает заключение долгосрочных отношений при поставках импортных электронных компонентов на взаимовыгодных условиях!

Наши преимущества:

- Поставка оригинальных импортных электронных компонентов напрямую с производств Америки, Европы и Азии, а так же с крупнейших складов мира;
- Широкая линейка поставок активных и пассивных импортных электронных компонентов (более 30 млн. наименований);
- Поставка сложных, дефицитных, либо снятых с производства позиций;
- Оперативные сроки поставки под заказ (от 5 рабочих дней);
- Экспресс доставка в любую точку России;
- Помощь Конструкторского Отдела и консультации квалифицированных инженеров;
- Техническая поддержка проекта, помощь в подборе аналогов, поставка прототипов;
- Поставка электронных компонентов под контролем ВП;
- Система менеджмента качества сертифицирована по Международному стандарту ISO 9001;
- При необходимости вся продукция военного и аэрокосмического назначения проходит испытания и сертификацию в лаборатории (по согласованию с заказчиком);
- Поставка специализированных компонентов военного и аэрокосмического уровня качества (Xilinx, Altera, Analog Devices, Intersil, Interpoint, Microsemi, Actel, Aeroflex, Peregrine, VPT, Syfer, Eurofarad, Texas Instruments, MS Kennedy, Miteq, Cobham, E2V, MA-COM, Hittite, Mini-Circuits, General Dynamics и др.);

Компания «Океан Электроники» является официальным дистрибьютором и эксклюзивным представителем в России одного из крупнейших производителей разъемов военного и аэрокосмического назначения «**JONHON**», а так же официальным дистрибьютором и эксклюзивным представителем в России производителя высокотехнологичных и надежных решений для передачи СВЧ сигналов «**FORSTAR**».

AVIC JONHON

«JONHON» (основан в 1970 г.)

Разъемы специального, военного и аэрокосмического назначения:

(Применяются в военной, авиационной, аэрокосмической, морской, железнодорожной, горно- и нефтедобывающей отраслях промышленности)

«FORSTAR» (основан в 1998 г.)

ВЧ соединители, коаксиальные кабели, кабельные сборки и микроволновые компоненты:

(Применяются в телекоммуникациях гражданского и специального назначения, в средствах связи, РЛС, а так же военной, авиационной и аэрокосмической отраслях промышленности).

FORSTAR®

Телефон: 8 (812) 309-75-97 (многоканальный)
Факс: 8 (812) 320-03-32
Электронная почта: ocean@oceanchips.ru
Web: http://oceanchips.ru/
Адрес: 198099, г. Санкт-Петербург, ул. Калинина, д. 2, корп. 4, лит. А