3.3V ZERO DELAY CLOCK BUFFER

IDT2305A

FEATURES:

- Phase-Lock Loop Clock Distribution
- 10MHz to 133MHz operating frequency
- Distributes one clock input to one bank of five outputs
- Zero Input-Output Delay
- Output Skew < 250ps
- Low jitter <200 ps cycle-to-cycle
- IDT2305A-1 for Standard Drive
- IDT2305A-1H for High Drive
- No external RC network required
- Operates at 3.3V V_{DD}
- Power down mode
- Available in SOIC package

DESCRIPTION:

The IDT2305A is a high-speed phase-lock loop (PLL) clock buffer, designed to address high-speed clock distribution applications. The zero delay is achieved by aligning the phase between the incoming clock and the output clock, operable within the range of 10 to 133MHz.

The IDT2305A is an 8-pin version of the IDT2309A. IDT2305A accepts one reference input, and drives out five low skew clocks. The -1H version of this device operates up to 133MHz frequency and has a higher drive than the -1 device. All parts have on-chip PLLs which lock to an input clock on the REF pin. The PLL feedback is on-chip and is obtained from the CLKOUT pad. In the absence of an input clock, the IDT2305A enters power down. In this mode, the device will draw less than 12µA for Commercial Temperature range and less than 25µA for Industrial temperature range, the outputs are tri-stated, and the PLL is not running, resulting in a significant reduction of power.

The IDT2305A is characterized for both Industrial and Commercial operation.

FUNCTIONAL BLOCK DIAGRAM

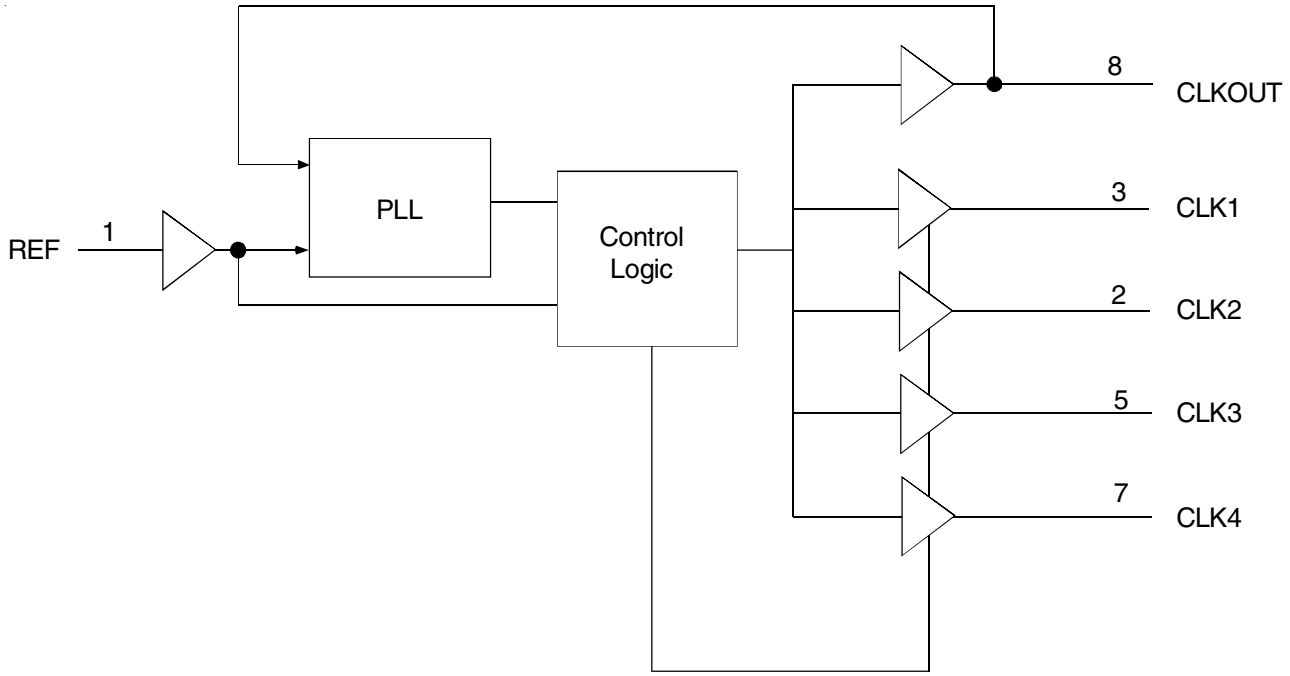

The IDT logo is a registered trademark of Integrated Device Technology, Inc.

© 2012 Integrated Device Technology, Inc.

PIN CONFIGURATION

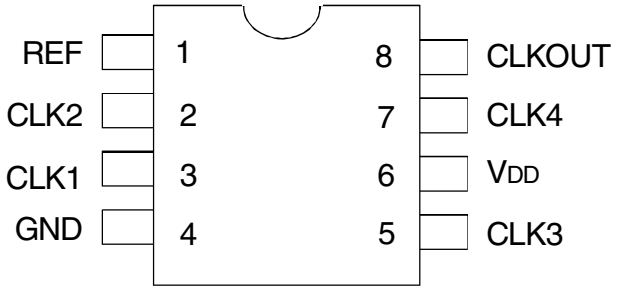

SOIC
TOP VIEW

ABSOLUTE MAXIMUM RATINGS[1]

Symbol	Rating	Max.	Unit
V_{DD}	Supply Voltage Range	–0.5 to +4.6	V
V_I [2]	Input Voltage Range (REF)	–0.5 to +5.5	V
V_I	Input Voltage Range (except REF)	–0.5 to V_{DD}+0.5	V
I_{IK} (V_I < 0)	Input Clamp Current	–50	mA
I_O (V_O = 0 to V_{DD})	Continuous Output Current	±50	mA
V_{DD} or GND	Continuous Current	±100	mA
T_A = 55°C (in still air)[3]	Maximum Power Dissipation	0.7	W
T_{STG}	Storage Temperature Range	–65 to +150	°C
Operating Temperature	Commercial Temperature Range	0 to +70	°C
Operating Temperature	Industrial Temperature Range	-40 to +85	°C

NOTES:
1. Stresses greater than those listed under ABSOLUTE MAXIMUM RATINGS may cause permanent damage to the device. This is a stress rating only and functional operation of the device at these or any other conditions above those indicated in the operational sections of this specification is not implied. Exposure to absolute maximum rating conditions for extended periods may affect reliability.
2. The input and output negative-voltage ratings may be exceeded if the input and output clamp-current ratings are observed.
3. The maximum package power dissipation is calculated using a junction temperature of 150°C and a board trace length of 750 mils.

APPLICATIONS:

- SDRAM
- Telecom
- Datacom
- PC Motherboards/Workstations
- Critical Path Delay Designs

PIN DESCRIPTION

Pin Name	Pin Number	Type	Functional Description
REF	1	IN	Input reference clock, 5 Volt tolerant input
CLK2[1]	2	Out	Output clock
CLK1[1]	3	Out	Output clock
GND	4	Ground	Ground
CLK3[1]	5	Out	Output clock
V_{DD}	6	PWR	3.3V Supply
CLK4[1]	7	Out	Output clock
CLKOUT[1]	8	Out	Output clock, internal feedback on this pin

NOTES:
1. Weak pull down on all outputs.

OPERATING CONDITIONS - COMMERCIAL

Symbol	Parameter	Min.	Max.	Unit
V_{DD}	Supply Voltage	3	3.6	V
T_A	Operating Temperature (Ambient Temperature)	0	70	°C
C_L	Load Capacitance < 100MHz	—	30	pF
	Load Capacitance 100MHz - 133MHz	—	10	
C_{IN}	Input Capacitance	—	7	pF

DC ELECTRICAL CHARACTERISTICS - COMMERCIAL

Symbol	Parameter	Conditions		Min.	Max.	Unit
V_{IL}	Input LOW Voltage Level			—	0.8	V
V_{IH}	Input HIGH Voltage Level			2	—	V
I_{IL}	Input LOW Current	V_{IN} = 0V		—	50	µA
I_{IH}	Input HIGH Current	V_{IN} = V_{DD}		—	100	µA
V_{OL}	Output LOW Voltage	Standard Drive	I_{OL} = 8mA	—	0.4	V
		High Drive	I_{OL} = 12mA (-1H)			
V_{OH}	Output HIGH Voltage	Standard Drive	I_{OH} = -8mA	2.4	—	V
		High Drive	I_{OH} = -12mA (-1H)			
I_{DD_PD}	Power Down Current	REF = 0MHz		—	12	µA
I_{DD}	Supply Current	Unloaded Outputs at 66.66MHz		—	32	mA

SWITCHING CHARACTERISTICS (2305A-1) - COMMERCIAL[1,2]

Symbol	Parameter	Conditions	Min.	Typ.	Max.	Unit
t_1	Output Frequency	10pF Load	10	—	133	MHz
		30pF Load	10	—	100	
	Duty Cycle = $t_2 \div t_1$	Measured at 1.4V, F_{OUT} = 66.66MHz	40	50	60	%
t_3	Rise Time	Measured between 0.8V and 2V	—	—	2.5	ns
t_4	Fall Time	Measured between 0.8V and 2V	—	—	2.5	ns
t_5	Output to Output Skew	All outputs equally loaded	—	—	250	ps
t_6	Delay, REF Rising Edge to CLKOUT Rising Edge	Measured at $V_{DD}/2$	—	0	±350	ps
t_7	Device-to-Device Skew	Measured at $V_{DD}/2$ on the CLKOUT pins of devices	—	0	700	ps
t_J	Cycle-to-Cycle Jitter, pk - pk	Measured at 54-81MHz, loaded outputs	—	—	170	ps
		Other frequencies, loaded outputs			200	ps
t_{LOCK}	PLL Lock Time	Stable power supply, valid clock presented on REF pin	—	—	1	ms

NOTES:
1. REF Input has a threshold voltage of $V_{DD}/2$.
2. All parameters specified with loaded outputs.

SWITCHING CHARACTERISTICS (2305A-1H) - COMMERCIAL[1,2]

Symbol	Parameter	Conditions	Min.	Typ.	Max.	Unit
t_1	Output Frequency	10pF Load	10	—	133	MHz
		30pF Load	10	—	100	
	Duty Cycle = $t_2 \div t_1$	Measured at 1.4V, F_{OUT} = 66.66MHz	40	50	60	%
	Duty Cycle = $t_2 \div t_1$	Measured at 1.4V, F_{OUT} <50MHz	45	50	55	%
t_3	Rise Time	Measured between 0.8V and 2V	—	—	1.5	ns
t_4	Fall Time	Measured between 0.8V and 2V	—	—	1.5	ns
t_5	Output to Output Skew	All outputs equally loaded	—	—	250	ps
t_6	Delay, REF Rising Edge to CLKOUT Rising Edge	Measured at $V_{DD}/2$	—	0	±350	ps
t_7	Device-to-Device Skew	Measured at $V_{DD}/2$ on the CLKOUT pins of devices	—	0	700	ps
t_8	Output Slew Rate	Measured between 0.8V and 2V using Test Circuit #2	1	—	—	V/ns
t_J	Cycle-to-Cycle Jitter, pk - pk	Measured at 54-81MHz, loaded outputs	—	—	170	ps
		Other frequencies, loaded outputs			200	ps
t_{LOCK}	PLL Lock Time	Stable power supply, valid clock presented on REF pin	—	—	1	ms

NOTES:
1. REF Input has a threshold voltage of $V_{DD}/2$.
2. All parameters specified with loaded outputs.

OPERATING CONDITIONS - INDUSTRIAL

Symbol	Parameter	Min.	Max.	Unit
V_{DD}	Supply Voltage	3	3.6	V
T_A	Operating Temperature (Ambient Temperature)	-40	+85	°C
C_L	Load Capacitance < 100MHz	—	30	pF
	Load Capacitance 100MHz - 133MHz	—	10	
C_{IN}	Input Capacitance	—	7	pF

DC ELECTRICAL CHARACTERISTICS - INDUSTRIAL

Symbol	Parameter	Conditions		Min.	Max.	Unit
V_{IL}	Input LOW Voltage Level			—	0.8	V
V_{IH}	Input HIGH Voltage Level			2	—	V
I_{IL}	Input LOW Current	V_{IN} = 0V		—	50	µA
I_{IH}	Input HIGH Current	V_{IN} = V_{DD}		—	100	µA
V_{OL}	Output LOW Voltage	Standard Drive	I_{OL} = 8mA	—	0.4	V
		High Drive	I_{OL} = 12mA (-1H)			
V_{OH}	Output HIGH Voltage	Standard Drive	I_{OH} = -8mA	2.4	—	V
		High Drive	I_{OH} = -12mA (-1H)			
I_{DD_PD}	Power Down Current	REF = 0MHz		—	25	µA
I_{DD}	Supply Current	Unloaded Outputs at 66.66MHz		—	35	mA

SWITCHING CHARACTERISTICS (2305A-1) - INDUSTRIAL (1,2)

Symbol	Parameter	Conditions	Min.	Typ.	Max.	Unit
t_1	Output Frequency	10pF Load	10	—	133	MHz
		30pF Load	10	—	100	
	Duty Cycle = $t_2 \div t_1$	Measured at 1.4V, F_{OUT} = 66.66MHz	40	50	60	%
t_3	Rise Time	Measured between 0.8V and 2V	—	—	2.5	ns
t_4	Fall Time	Measured between 0.8V and 2V	—	—	2.5	ns
t_5	Output to Output Skew	All outputs equally loaded	—	—	250	ps
t_6	Delay, REF Rising Edge to CLKOUT Rising Edge	Measured at $V_{DD}/2$	—	0	±350	ps
t_7	Device-to-Device Skew	Measured at $V_{DD}/2$ on the CLKOUT pins of devices	—	0	700	ps
t_J	Cycle-to-Cycle Jitter, pk - pk	Measured at 54-81MHz, loaded outputs	—	—	170	ps
		Other frequencies, loaded outputs			200	ps
t_{LOCK}	PLL Lock Time	Stable power supply, valid clock presented on REF pin	—	—	1	ms

NOTES:
1. REF Input has a threshold voltage of $V_{DD}/2$.
2. All parameters specified with loaded outputs.

SWITCHING CHARACTERISTICS (2305A-1H) - INDUSTRIAL (1,2)

Symbol	Parameter	Conditions	Min.	Typ.	Max.	Unit
t_1	Output Frequency	10pF Load	10	—	133	MHz
		30pF Load	10	—	100	
	Duty Cycle = $t_2 \div t_1$	Measured at 1.4V, F_{OUT} = 66.66MHz	40	50	60	%
	Duty Cycle = $t_2 \div t_1$	Measured at 1.4V, F_{OUT} <50MHz	45	50	55	%
t_3	Rise Time	Measured between 0.8V and 2V	—	—	1.5	ns
t_4	Fall Time	Measured between 0.8V and 2V	—	—	1.5	ns
t_5	Output to Output Skew	All outputs equally loaded	—	—	250	ps
t_6	Delay, REF Rising Edge to CLKOUT Rising Edge	Measured at $V_{DD}/2$	—	0	±350	ps
t_7	Device-to-Device Skew	Measured at $V_{DD}/2$ on the CLKOUT pins of devices	—	0	700	ps
t_8	Output Slew Rate	Measured between 0.8V and 2V using Test Circuit #2	1	—	—	V/ns
t_J	Cycle-to-Cycle Jitter, pk - pk	Measured at 54-81MHz, loaded outputs	—	—	170	ps
		Other frequencies, loaded outputs			200	ps
t_{LOCK}	PLL Lock Time	Stable power supply, valid clock presented on REF pin	—	—	1	ms

NOTES:
1. REF Input has a threshold voltage of $V_{DD}/2$.
2. All parameters specified with loaded outputs.

ZERO DELAY AND SKEW CONTROL

All outputs should be uniformly loaded in order to achieve Zero I/O Delay. Since the CLKOUT pin is the internal feedback for the PLL, its relative loading can affect and adjust the input/output delay.

For designs utilizing zero I/O Delay, all outputs including CLKOUT must be equally loaded. Even if the output is not used, it must have a capacitive load equal to that on the other outputs in order to obtain true zero I/O Delay. If I/O Delay adjustments are needed, use the Output Load Difference diagram to calculate loading differences between the CLKOUT pin and other outputs. For zero output-to-output skew, all outputs must be loaded equally.

SWITCHING WAVEFORMS

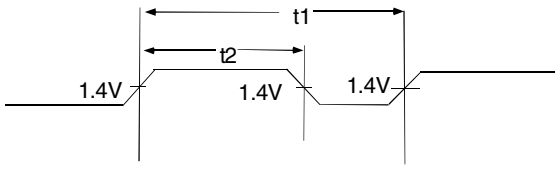

Duty Cycle Timing

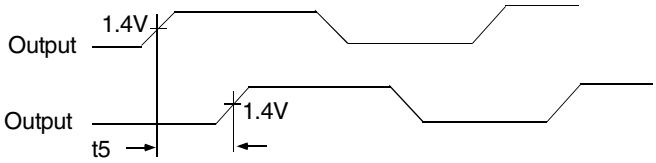

Output to Output Skew

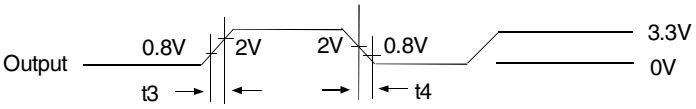

All Outputs Rise/Fall Time

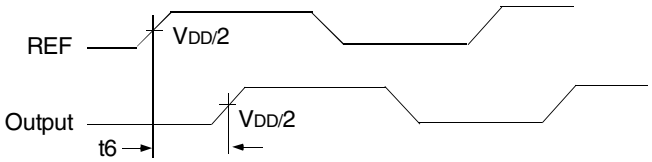

Input to Output Propagation Delay

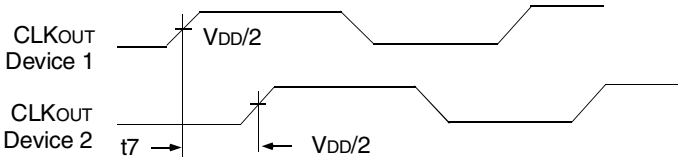

Device to Device Skew

TEST CIRCUITS

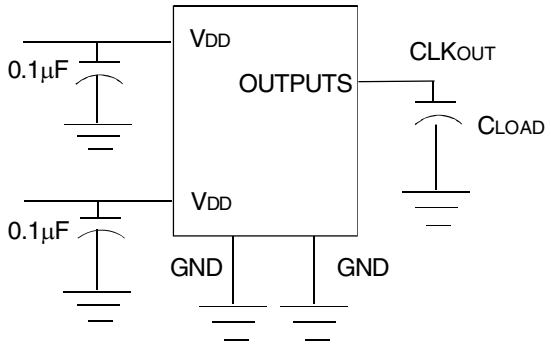

Test Circuit 1 (all Parameters Except t8)

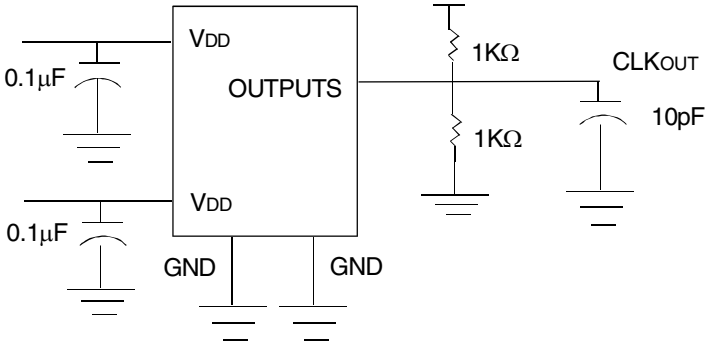

Test Circuit 2 (t8, Output Slew Rate On -1H Devices)

ORDERING INFORMATION

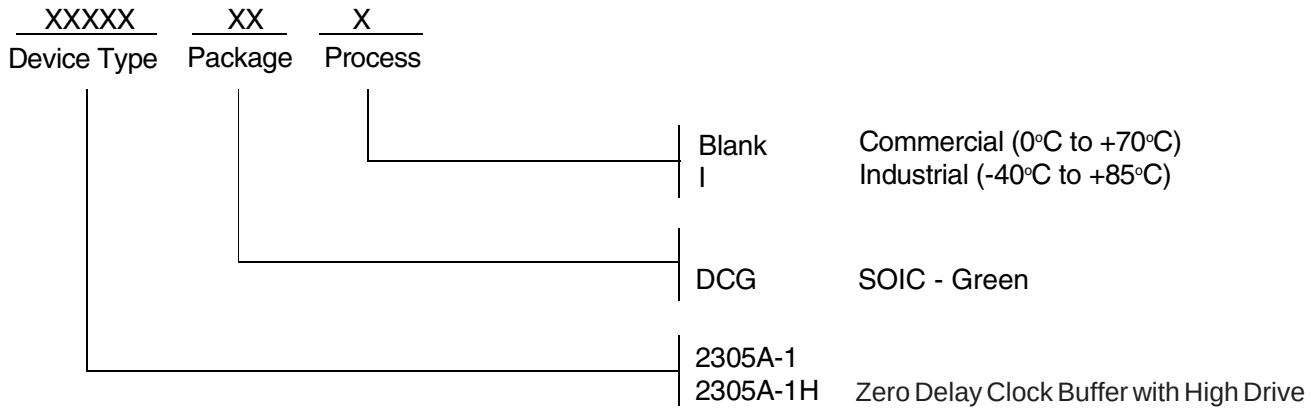

Ordering Code	Package Type	Operating Range
2305A-1DCG8 (tape and reel)	8-Pin SOIC	Commercial
2305A-1DCG	8-Pin SOIC	Commercial
2305A-1DCGI	8-Pin SOIC	Industrial
2305A-1DCGI8 (tape and reel)	8-Pin SOIC	Industrial
2305A-1HDCG8 (tape and reel)	8-Pin SOIC	Commercial
2305A-1HDCG	8-Pin SOIC	Commercial
2305A-1HDCGI	8-Pin SOIC	Industrial
2305A-1HDCGI8 (tape and reel)	8-Pin SOIC	Industrial

G denotes Pb-free, RoHS complaint package; "8" denotes tape and reel

CORPORATE HEADQUARTERS
6024 Silver Creek Valley Road
San Jose, CA 95138

for SALES:
800-345-7015 or 408-284-8200
fax: 408-284-2775
www.idt.com

for Tech Support:
clockhelp@idt.com

OCEAN CHIPS
Океан Электроники
Поставка электронных компонентов

Компания «Океан Электроники» предлагает заключение долгосрочных отношений при поставках импортных электронных компонентов на взаимовыгодных условиях!

Наши преимущества:

- Поставка оригинальных импортных электронных компонентов напрямую с производств Америки, Европы и Азии, а так же с крупнейших складов мира;
- Широкая линейка поставок активных и пассивных импортных электронных компонентов (более 30 млн. наименований);
- Поставка сложных, дефицитных, либо снятых с производства позиций;
- Оперативные сроки поставки под заказ (от 5 рабочих дней);
- Экспресс доставка в любую точку России;
- Помощь Конструкторского Отдела и консультации квалифицированных инженеров;
- Техническая поддержка проекта, помощь в подборе аналогов, поставка прототипов;
- Поставка электронных компонентов под контролем ВП;
- Система менеджмента качества сертифицирована по Международному стандарту ISO 9001;
- При необходимости вся продукция военного и аэрокосмического назначения проходит испытания и сертификацию в лаборатории (по согласованию с заказчиком);
- Поставка специализированных компонентов военного и аэрокосмического уровня качества (Xilinx, Altera, Analog Devices, Intersil, Interpoint, Microsemi, Actel, Aeroflex, Peregrine, VPT, Syfer, Eurofarad, Texas Instruments, MS Kennedy, Miteq, Cobham, E2V, MA-COM, Hittite, Mini-Circuits, General Dynamics и др.);

Компания «Океан Электроники» является официальным дистрибьютором и эксклюзивным представителем в России одного из крупнейших производителей разъемов военного и аэрокосмического назначения **«JONHON»**, а так же официальным дистрибьютором и эксклюзивным представителем в России производителя высокотехнологичных и надежных решений для передачи СВЧ сигналов **«FORSTAR»**.

AVIC JONHON

«JONHON» (основан в 1970 г.)

Разъемы специального, военного и аэрокосмического назначения:

(Применяются в военной, авиационной, аэрокосмической, морской, железнодорожной, горно- и нефтедобывающей отраслях промышленности)

«FORSTAR» (основан в 1998 г.)

ВЧ соединители, коаксиальные кабели, кабельные сборки и микроволновые компоненты:

(Применяются в телекоммуникациях гражданского и специального назначения, в средствах связи, РЛС, а так же военной, авиационной и аэрокосмической отраслях промышленности).

FORSTAR®

Телефон: 8 (812) 309-75-97 (многоканальный)
Факс: 8 (812) 320-03-32
Электронная почта: ocean@oceanchips.ru
Web: http://oceanchips.ru/
Адрес: 198099, г. Санкт-Петербург, ул. Калинина, д. 2, корп. 4, лит. А