DATA SHEET

P83C524; P80C528; P83C528
8-bit microcontrollers

Product specification
File under Integrated Circuits, IC20

1997 Dec 15

Philips
Semiconductors

PHILIPS

CONTENTS

1 FEATURES
2 GENERAL DESCRIPTION
3 QUICK REFERENCE DATA
4 ORDERING INFORMATION
5 BLOCK DIAGRAM
6 FUNCTIONAL DIAGRAM
7 PINNING INFORMATION
7.1 Pinning
7.2 Pin description
8 FUNCTIONAL DESCRIPTION
8.1 General
8.2 Instruction Set Execution
9 MEMORY ORGANIZATION
9.1 Program Memory
9.2 Internal Data Memory
9.3 Addressing
10 I/O FACILITIES
11 TIMERS/COUNTERS
11.1 Timer 0 and Timer 1
11.1.1 Timer/Counter Mode Control register (TMOD)
11.1.2 Timer/Counter Control Register (TCON)
11.2 Timer 2
11.2.1 Timer 2 Control Register (T2CON)
11.2.2 Capture Mode
11.2.3 Automatic Reload Mode
11.2.4 Baud Rate Generator Mode
11.3 Watchdog Timer T3
12 SERIAL PORT (UART)
12.1 Serial Port Control Register (SCON)
12.2 SM0 and SM1 operating modes (SCON)
13 BIT-LEVEL I^{2}C INTERFACE
13.1 I^{2}C Interrupt Register (S1INT)
13.2 Single-bit Data Register with I^{2}C Auto-clock (S1BIT)
13.2.1 Reading or Writing the S1BIT SFR
13.3 Control and Status Register for the I^{2}C-bus (S1SCS)
14 INTERRUPT SYSTEM
14.1 Interrupt Enable Register (IE)
14.2 Interrupt Priority Register (IP)
14.3 Interrupt Vectors
15 IDLE AND POWER-DOWN OPERATION
15.1 Power Control Register (PCON)
15.2 Idle Mode
15.3 Power-down Mode
15.4 Wake-up from Power-down Mode
16 OSCILLATOR CIRCUIT
17 RESET CIRCUIT
17.1 Power-on reset
18 INSTRUCTION SET
19 LIMITING VALUES
20 DC CHARACTERISTICS
21 AC CHARACTERISTICS
21.1 AC Characteristics 16 MHz version
21.2 AC Characteristics 24 MHz version
22 I^{2}C CHARACTERISTICS (BIT-LEVEL)
23 XTAL1 CHARACTERISTICS
24 SERIAL PORT CHARACTERISTICS
25 TIMING DIAGRAMS
25.1 Timing symbol definitions
26 PACKAGE OUTLINES
27 SOLDERING
27.1 Introduction
27.2 DIP
27.2.1 Soldering by dipping or by wave
27.2.2 Repairing soldered joints
27.3 PLCC and QFP
27.3.1 Reflow soldering
27.3.2 Wave soldering
27.3.3 Repairing soldered joints
28 DEFINITIONS
29 LIFE SUPPORT APPLICATIONS
30 PURCHASE OF PHILIPS I^{2}C COMPONENTS

1 FEATURES

- 80C51 CPU
- 32 kbytes on-chip ROM, expandable externally to 64 kbytes Program Memory address space
- P83C524:
  - 16 kbytes on-chip ROM, expandable externally from 32 kbytes to 64 kbytes Program Memory address space (address space 16 k to 32 k not usable)
- P80C528:
  - ROMless version of P83C528
- P83C528:
  - 32 kbytes on-chip ROM, expandable externally from 32 kbytes to 64 kbytes Program Memory address space
- EPROM versions are available: see separate data sheet P87C524 and P87C528
- 512 bytes on-chip RAM, expandable externally to 64 kbytes Data Memory address space
- Four 8-bit I/O ports
- Full-duplex UART compatible with the standard 80C51 and the 8052
- Two standard 16-bit timer/counters
- An additional 16-bit timer (functionally equivalent to the timer 2 of the 8052)
- On-chip Watchdog Timer (WDT) with an own oscillator
- Bit-level I^2C-bus hardware serial I/O Port
- 7-source and 7-vector interrupt structure with 2 priority levels
- Up to 3 external interrupt request inputs
- Two programmable power reduction modes (Idle and Power-down)
- Termination of Idle mode by any interrupt, external or WDT (watchdog) reset
- Wake-up from Power-down by external interrupt, external or WDT reset
- ROM code protection
- XTAL frequency range: 3.5 MHz to 16 MHz and 3.5 MHz to 24 MHz
- All packaging pin-outs fully compatible to the standard 8051/8052.

2 GENERAL DESCRIPTION

The P83C524 and P83C528 single-chip 8-bit microcontrollers are manufactured in an advanced CMOS process and are derivatives of the PCB80C51 microcontroller family. These devices provide architectural enhancements that make them applicable in a variety of applications in general control systems, especially in those systems which need a large ROM and RAM capacity on chip.

The P83C524 and P83C528 contain a non-volatile 16 k × 8 respectively 32 k × 8 read-only program memory, a volatile 512 bytes × 8 read/write data memory, four 8-bit I/O ports, two 16-bit timer/event counters (identical to the timers of the 80C51), a 16-bit timer (identical to the timer 2 of the 8052), a multi-source, two-priority-level, nested interrupt structure, two serial interfaces (UART and bit-level I^2C-bus), a watchdog timer (WDT) with a separate oscillator, an on-chip oscillator and timing circuits. For systems that require extra capability, the P83C524 and P83C528 can be expanded using standard TTL compatible memories and logic.

The device also functions as an arithmetic processor having facilities for both binary and BCD arithmetic plus bit-handling capabilities. The P83C524 and P83C528 have the same instruction set as the PCB80C51 which consists of over 100 instructions: 49 one-byte, 46 two-byte and 16 three-byte. With a 16 MHz crystal, 58% of the instructions are executed in 750 ns and 40% in 1.5 μs. Multiply and divide instructions require 3 μs.

3 QUICK REFERENCE DATA

SYMBOL	PARAMETER	CONDITION	MIN.	MAX.	UNIT
P83C524, P80C528, P83C528 (see characteristics tables for extended temperature range versions)					
V_{DD}	supply voltage range		4.5	5.5	V
I_{DD}	supply current: operating modes 16 MHz	V_{DD} = 5.5 V, f_{CLK} = 16 MHz	–	33	mA
I_{ID}	supply current: Idle mode 16 MHz	V_{DD} = 5.5 V, f_{CLK} = 16 MHz	–	6	mA
I_{PD}	supply current: Power-down mode	$2V \leq V_{PD} \leq V_{DD}$ max.	–	100	μA
P_{tot}	total power dissipation		–	1	W
T_{stg}	storage temperature range		–65	+150	°C
T_{amb}	operating ambient temperature range		–40	+85	°C

4 ORDERING INFORMATION

EXTENDED TYPE NUMBER	PACKAGE			TEMPERATURE RANGE (°C)	FREQ. (MHZ)
	NAME	DESCRIPTION	VERSION		
ROMless					
P80C528EBP	DIP40	plastic dual in-line package; 40 leads (600 mil)	SOT129-1	0 to +70	3.5 to 16
P80C528EFP				–40 to +85	
P80C528IBP				0 to +70	3.5 to 24
P80C528IFP				–40 to +85	
P80C528EBA	PLCC44	plastic leaded chip carrier; 44 leads	SOT187-2	0 to +70	3.5 to 16
P80C528EFA				–40 to +85	
P80C528IBA				0 to +70	3.5 to 24
P80C528IFA				–40 to +85	
P80C528EBB	QFP44	plastic quad flat package; 44 leads (lead length 1.3 mm); body 10 × 10 × 1.75 mm	SOT307-2	0 to +70	3.5 to 16
P80C528EFB				–40 to +85	
P80C528IBB				0 to +70	3.5 to 24
P80C528IFB				–40 to +85	
ROM					
P83C524EBP	DIP40	plastic dual in-line package; 40 leads (600 mil)	SOT129-1	0 to +70	3.5 to 16
P83C524EFP				–40 to +85	
P83C524IBP				0 to +70	3.5 to 24
P83C524IFP				–40 to +85	
P83C524EBA	PLCC44	plastic leaded chip carrier; 44 leads	SOT187-2	0 to +70	3.5 to 16
P83C524EFA				–40 to +85	
P83C524IBA				0 to +70	3.5 to 24
P83C524IFA				–40 to +85	
P83C524EBB	QFP44	plastic quad flat package; 44 leads (lead length 1.3 mm); body 10 × 10 × 1.75 mm	SOT307-2	0 to +70	3.5 to 16
P83C524EFB				–40 to +85	
P83C524IBB				0 to +70	3.5 to 24
P83C524IFB				–40 to +85	

EXTENDED TYPE NUMBER	PACKAGE			TEMPERATURE RANGE (°C)	FREQ. (MHZ)
	NAME	DESCRIPTION	VERSION		
P83C528EBP	DIP40	plastic dual in-line package; 40 leads (600 mil)	SOT129-1	0 to +70	3.5 to 16
P83C528EFP				–40 to +85	
P83C528IBP				0 to +70	3.5 to 24
P83C528IFP				–40 to +85	
P83C528EBA	PLCC44	plastic leaded chip carrier; 44 leads	SOT187-2	0 to +70	3.5 to 16
P83C528EFA				–40 to +85	
P83C528IBA				0 to +70	3.5 to 24
P83C528IFA				–40 to +85	
P83C528EBB	QFP44	plastic quad flat package; 44 leads (lead length 1.3 mm); body 10 × 10 × 1.75 mm	SOT307-2	0 to +70	3.5 to 16
P83C528EFB				–40 to +85	
P83C528IBB				0 to +70	3.5 to 24
P83C528IFB				–40 to +85	

5 BLOCK DIAGRAM

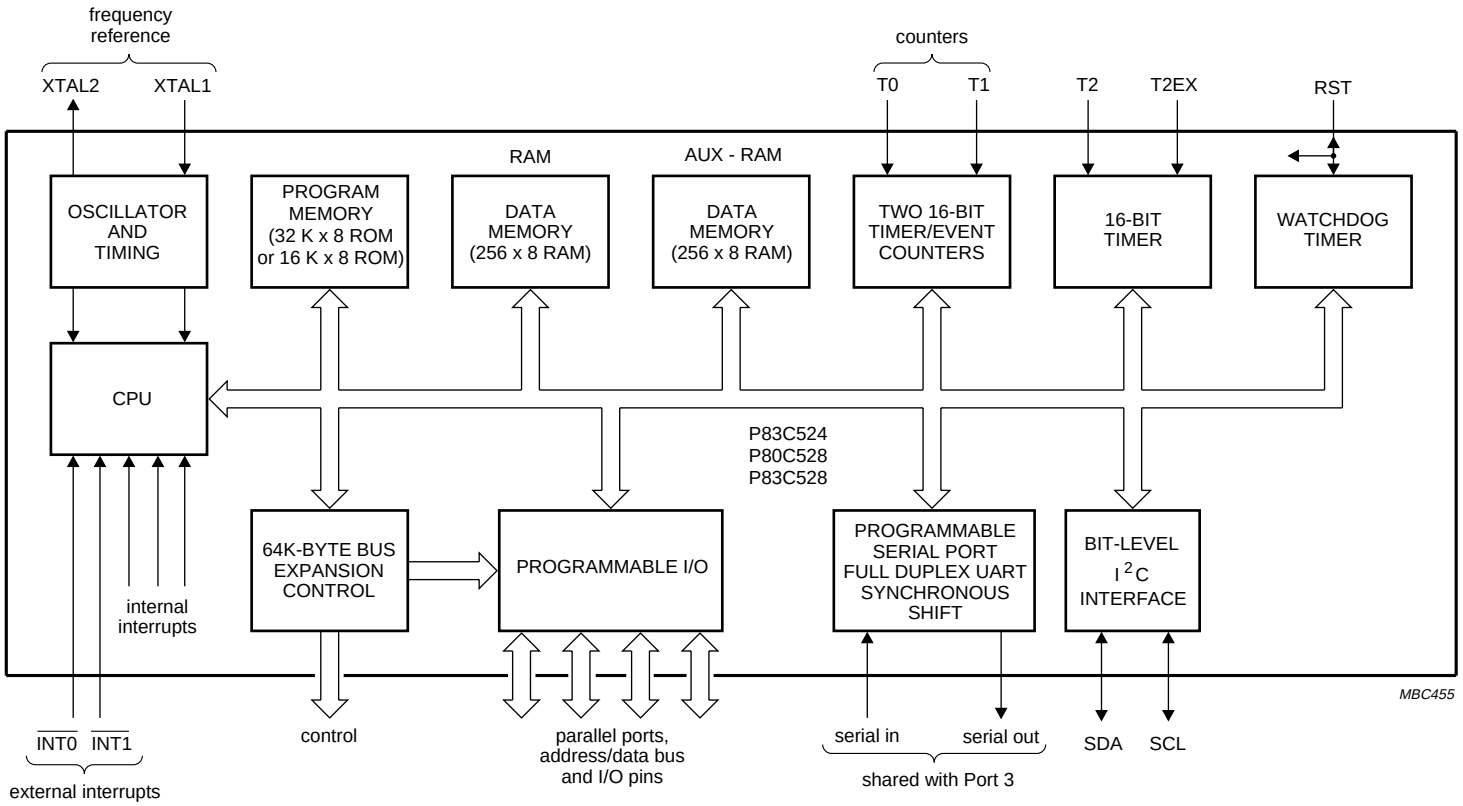

Fig.1 Block diagram.

6 FUNCTIONAL DIAGRAM

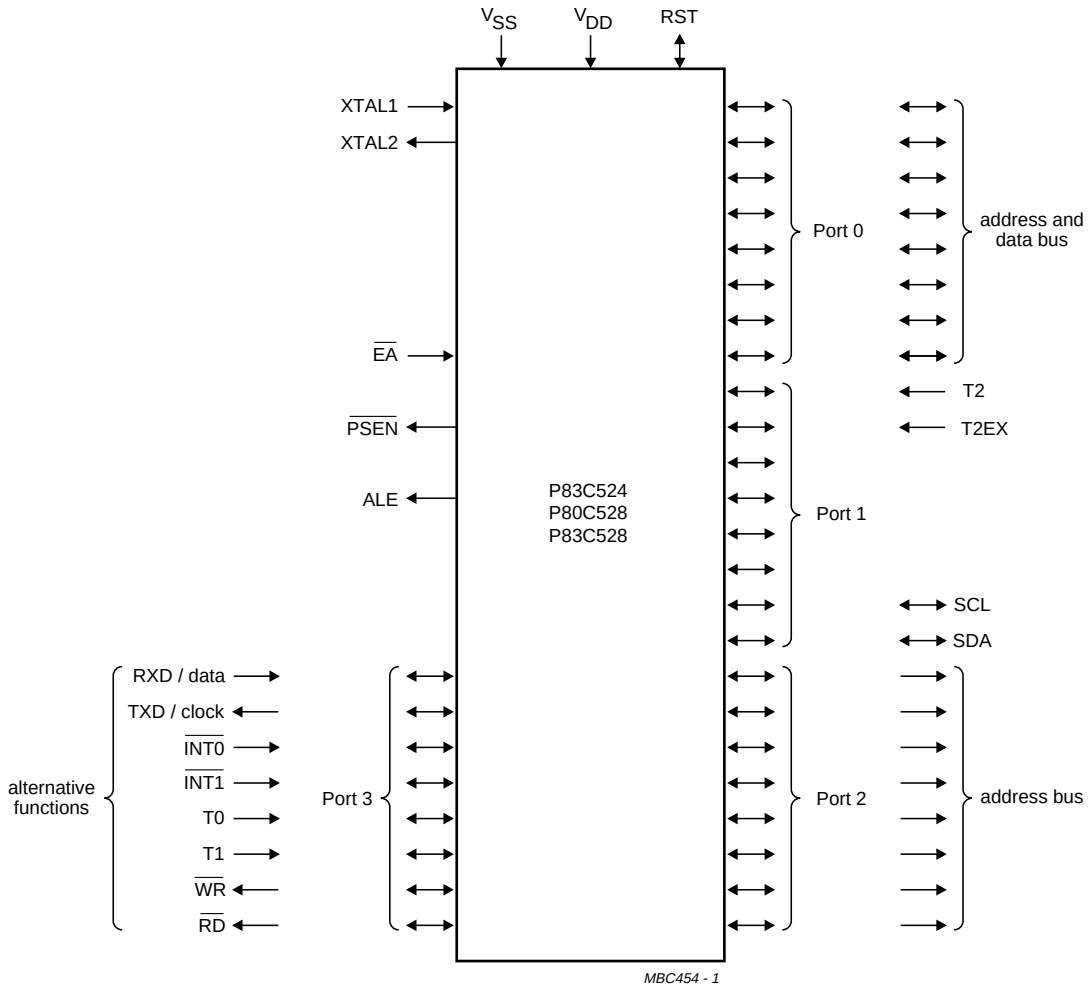

Fig.2 Functional diagram.

7 PINNING INFORMATION

7.1 Pinning

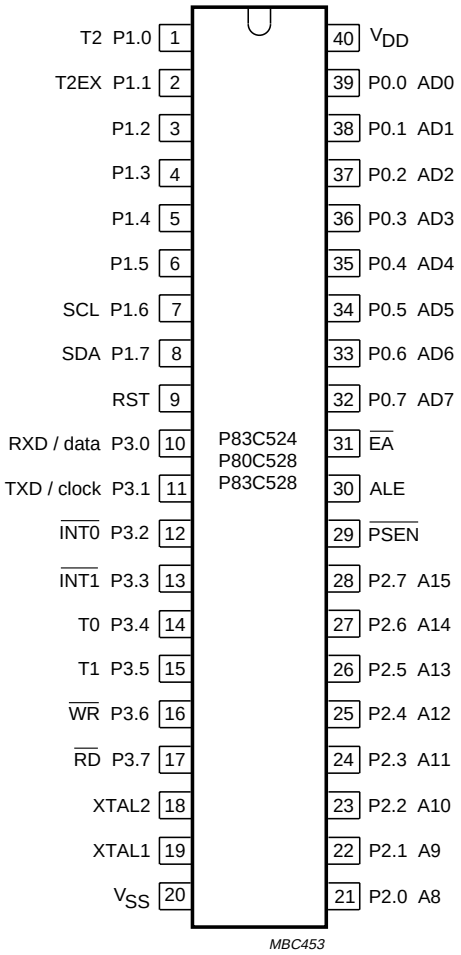

Fig.3 Pin configuration DIP40 (SOT129-1).

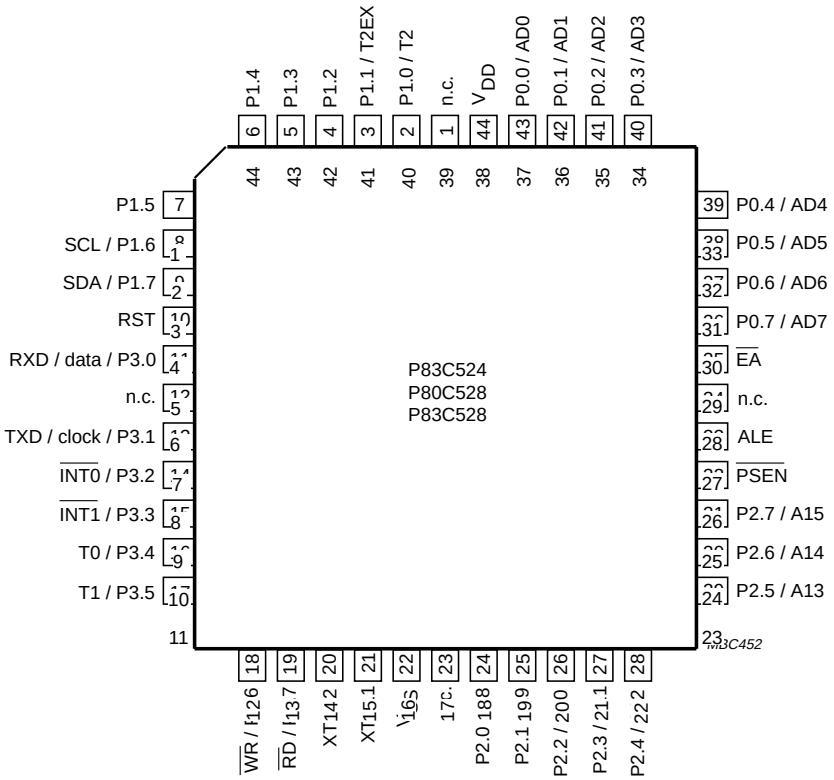

Fig.4 Pin configuration QFP44 (SOT307-2).

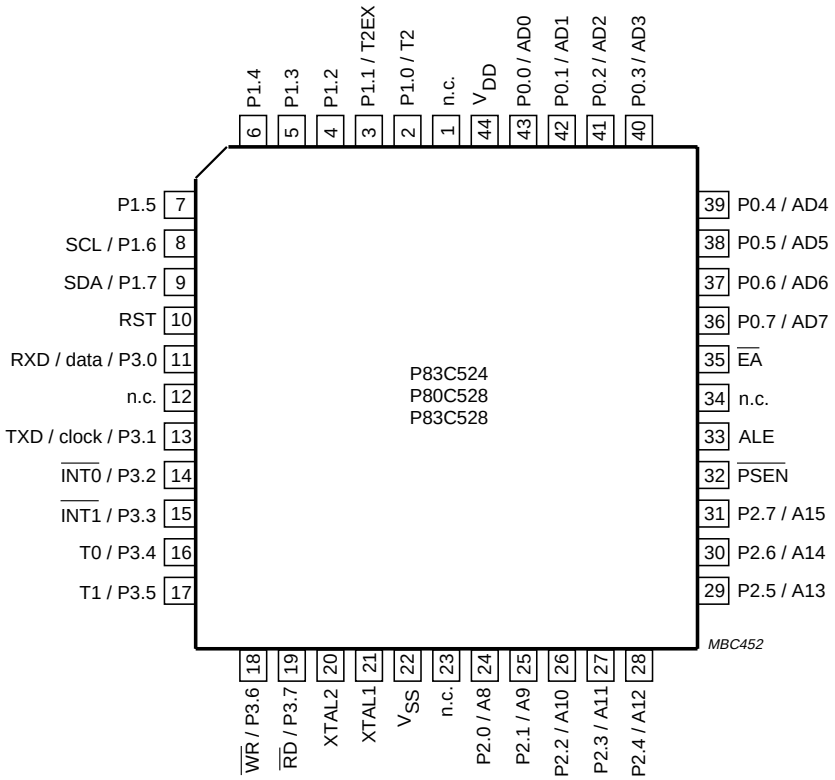

Fig.5 Pin configuration PLCC44 (SOT187-2).

7.2 Pin description

Table 1 Pin description for P83C524, P80C528 and P83C528; see note 1

SYMBOL	PIN			DESCRIPTION
	SOT 129-1	SOT 187-2	SOT 307-2	
P1.0–P1.7	1 to 8	2–9 (1 n.c.)	1–3, 40–44 (39 n.c.)	**Port 1**: 8-bit quasi-bidirectional I/O Port. Port 1 can sink/source one TTL (= 4 LSTTL) input. It can drive CMOS inputs without external pull-ups, except P1.6 and P1.7 which have open drain outputs.
				Port 1 alternative functions:
T2	1	2	40	**P1.0** Timer/event counter 2 external event counter input (falling edge triggered)
T2EX	2	3	41	**P1.1** Timer/event counter 2 capture/reload trigger or external interrupt 2 input (falling edge triggered)
SCL	7	8	2	**P1.6** I^2C-bus Serial Port clock line
SDA	8	9	3	**P1.7** I^2C-bus Serial Port data line.
RST	9	10	4	**RESET**: a HIGH level on this pin for two machine cycles while the oscillator is running, resets the device. An internal pull-down resistor permits power-on reset using only a capacitor connected to V_{DD}. After a WDT overflow this pin is pulled HIGH while the internal reset signal is active.
P3.0–P3.7	10–17	11, 13–19 (12 n.c.)	5, 7–13 (6 n.c.)	**Port 3**: 8-bit quasi-bidirectional I/O Port with internal pull-ups. Port 3 can sink/source one TTL (= 4 LSTTL) input. It can drive CMOS inputs without external pull-ups.
				Port 3 alternative functions:
RXD/data	10	11	5	**P3.0** Serial Port data input (asynchronous) or data input/output (synchronous)
TXD/clock	11	13	7	**P3.1** Serial Port data output (asynchronous) or clock output (synchronous)
$\overline{INT0}$	12	14	8	**P3.2** external interrupt 0 or gate control input for timer/event counter 0
$\overline{INT1}$	13	15	9	**P3.3** external interrupt 1 or gate control input for timer/event counter 1
T0	14	16	10	**P3.4** external input for timer/event counter 0
T1	15	17	11	**P3.5** external input for timer/event counter 1
$\overline{WR}$	16	18	12	**P3.6** external data memory write strobe
$\overline{RD}$	17	19	13	**P3.7** external data memory read strobe.
				The generation or use of a Port 3 pin as an alternative function is carried out automatically by the P83C528 provided the associated Special Function Register (SFR) bit is set HIGH.
XTAL2	18	20	14	**Crystal input 2**: output of the inverting amplifier that forms the oscillator. This pin left open-circuit when an external oscillator clock is used (see Figures 22 and 23).

SYMBOL	PIN			DESCRIPTION
	SOT 129-1	SOT 187-2	SOT 307-2	
XTAL1	19	21	15	**Crystal input 1**: input to the inverting amplifier that forms the oscillator, and input to the internal clock generator. Receives the external oscillator clock signal when an external oscillator is used (see Figures 22 and 23).
V_{SS}	20	22	16	**Ground**: circuit ground potential.
P2.0-P2.7	21–28	24–31 (23 n.c.)	18–25 (17 n.c.)	**Port 2**: 8-bit quasi-bidirectional I/O Port with internal pull-ups. During access to external memories (RAM/ROM) that use 16-bit addresses (MOVX @DPTR) Port 2 emits the high-order address byte (A8 to A15). Port 2 can sink/source one TTL (= 4 LSTTL) input. It can drive CMOS inputs without external pull-ups.
$\overline{PSEN}$	29	32	26	**Program Store Enable output**: read strobe to the external program memory via Port 0 and Port 2. It is activated twice each machine cycle during fetches from external program memory. When executing out of external program memory two activations of $\overline{PSEN}$ are skipped during each access to external data memory. $\overline{PSEN}$ is not activated (remains HIGH) during no fetches from external program memory. $\overline{PSEN}$ can sink/source 8 LSTTL inputs. It can drive CMOS inputs without external pull-ups.
ALE	30	33	27	**Address Latch Enable output**: latches the LOW byte of the address during access to external memory in normal operation. It is activated every six oscillator periods except during an external data memory access. ALE can sink/source 8 LSTTL inputs. It can drive CMOS inputs without an external pull-up.
$\overline{EA}$	31	35 (34 n.c.)	29 (28 n.c.)	**External Access input**: when during RESET, $\overline{EA}$ is held at a TTL HIGH level, the CPU executes out of the internal program ROM, provided the program counter is less than 32768. When $\overline{EA}$ is held at a TTL LOW level during RESET, the CPU executes out of external program memory via Port 0 and Port 2. $\overline{EA}$ is not allowed to float.
P0.0-P0.7	32–39	36–43	30–37	**Port 0**: 8-bit open drain bidirectional I/O Port. It is also the multiplexed low-order address and data bus during accesses to external memory (AD0 to AD7). During these accesses internal pull-ups are activated. Port 0 can sink/source 8 LSTTL inputs.
V_{DD}	40	44	38	**Power supply**: +5 V power supply pin during normal operation, Idle mode and Power-down mode.

Note

1. To avoid a 'latch-up' effect at power-on, the voltage on any pin (at any time) must not be higher than V_{DD} +0.5 V or lower than V_{SS} –0.5 V respectively.

8 FUNCTIONAL DESCRIPTION

8.1 General

The P83C524, P80C528 and P83C528 are stand-alone high-performance microcontrollers designed for use in real time applications such as instrumentation, industrial control, medium to high-end consumer applications and specific automotive control applications.

In addition to the 80C51 standard functions, the devices provide a number of dedicated hardware functions for these applications. The P83C524 and P83C528 are control-oriented CPUs with on-chip program and data memory. They can be extended with external program memory up to 64 kbytes. They can also access up to 64 kbytes of external data memory. For systems requiring extra capability, the P83C524 and P83C528 can be expanded using standard memories and peripherals.

The P83C524, P80C528 and P83C528 have two software selectable modes of reduced activity for further power reduction: Idle and Power-down. The Idle mode freezes the CPU while allowing the RAM, timers, serial ports and interrupt system to continue functioning. The Power-down mode saves the RAM contents but freezes the oscillator causing all other chip functions to be inoperative except the WDT if it is enabled. The Power-down mode can be terminated by an external reset, a WDT overflow, and in addition, by either of the two external interrupts.

8.2 Instruction Set Execution

The P83C524, P80C528 and P83C528 use the powerful instruction set of the 80C51. Additional SFRs are incorporated to control the on-chip peripherals. The instruction set consists of 49 single-byte, 46 two-byte and 16 three-byte instructions. When using a 16 MHz oscillator, 64 instructions execute in 750 ns and 45 instructions execute in 1.5 s. Multiply and divide instructions execute in 3 µs (see Chapter 18).

9 MEMORY ORGANIZATION

The central processing unit (CPU) manipulates operands in three memory spaces; these are the 64 kbyte external data memory (of which the lower 256 bytes reside in the internal AUX-RAM), 512 byte internal data memory (consisting of 256 bytes standard RAM and 256 bytes AUX-RAM) and the 64 kbyte internal and external program memory.

9.1 Program Memory

The program memory address space of the P83C528 comprises an internal and an external memory portion. The P83C528 has 32 kbyte of program memory on-chip. The program memory can be externally expanded up to 64 kbyte. If the $\overline{EA}$ pin is held HIGH, the P83C528 executes out of the internal program memory unless the address exceeds 7FFFH. Locations 8000H through 0FFFFH are then fetched from the external program memory. If the $\overline{EA}$ pin is held LOW, the P83C528 fetches all instructions from the external program memory. Fig.6 illustrates the program memory address space.

By setting a mask programmable security bit the ROM content is protected i.e. it cannot be read out by any test mode or by any instruction in the external program memory space. The MOVC instructions are the only ones which have access to program code in the internal or external program memory. The $\overline{EA}$ input is latched during RESET and is 'don't care' after RESET. This implementation prevents reading from internal program code by switching from external program memory to internal program memory during MOVC instruction or an instruction that handles immediate data. Table 2 lists the access to the internal and external program memory by the MOVC instructions when the security bit has been set to a logical one. If the security bit has been set to a logical 0 there are no restrictions for the MOVC instructions.

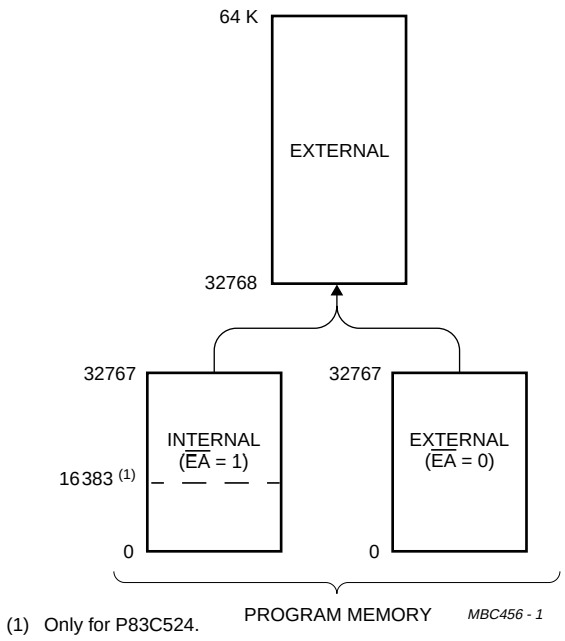

(1) Only for P83C524.

Fig.6 Program Memory Address Space.

Table 2 Internal and external program memory access with security bit set

INSTRUCTION	ACCESS TO INTERNAL PROGRAM MEMORY	ACCESS TO EXTERNAL PROGRAM MEMORY
MOVC in internal program memory	YES	YES
MOVC in external program memory	NO	YES

9.2 Internal Data Memory

The internal data memory is divided into three physically separated parts: 256 byte of RAM, 256 byte of AUX-RAM, and a 128 byte special function area (SFR). These parts can be addressed as follows (see Table 3 and Fig.11):

- RAM 0 to 127 can be addressed directly and indirectly as in the 80C51. Address pointers are R0 and R1 of the selected register bank.
- RAM 128 to 255 can only be addressed indirectly. Address pointers are R0 and R1 of the selected register bank.
- AUX-RAM 0 to 255 is indirectly addressable as the external data memory locations 0 to 255 with the MOVX instructions. Address pointers are R0 and R1 of the selected register bank and DPTR. When executing from internal program memory, an access to AUX-RAM 0 to 255 will not affect the ports P0, P2, P3.6 and P3.7.
- the SFRs can only be addressed directly in the address range from 128 to 255.

An access to external data memory locations higher than 255 will be performed with the MOVX DPTR instructions in the same way as in the 80C51 structure, i.e. with P0 and P2 as data/address bus and P3.6 and P3.7 as write and read timing signals (see Figures 7, 8, 9 and 10). Note that the external data memory cannot be accessed with R0 and R1 as address pointer.

Fig.11 shows the internal and external data memory address space. Fig.12 shows the Special Function Register (SFR) memory map. Four 8-bit register banks occupy locations 0 through 31 in the lower RAM area. Only one of these banks may be enabled at a time. The next 16 bytes, locations 32 through 47, contain 128 directly addressable bit locations.

The stack can be located anywhere in the internal 256 byte RAM. The stack depth is only limited by the available internal RAM space of 256 bytes. All registers except the Program Counter and the four 8-bit register banks reside in the SFR address space.

Table 3 Internal data memory access

LOCATION	ADDRESSED
RAM 0 to 127	DIRECT and INDIRECT
RAM 128 to 255	INDIRECT only
AUX-RAM 0 to 255	INDIRECT only with MOVX
Special Function Register (SFR) 128 to 255	DIRECT only

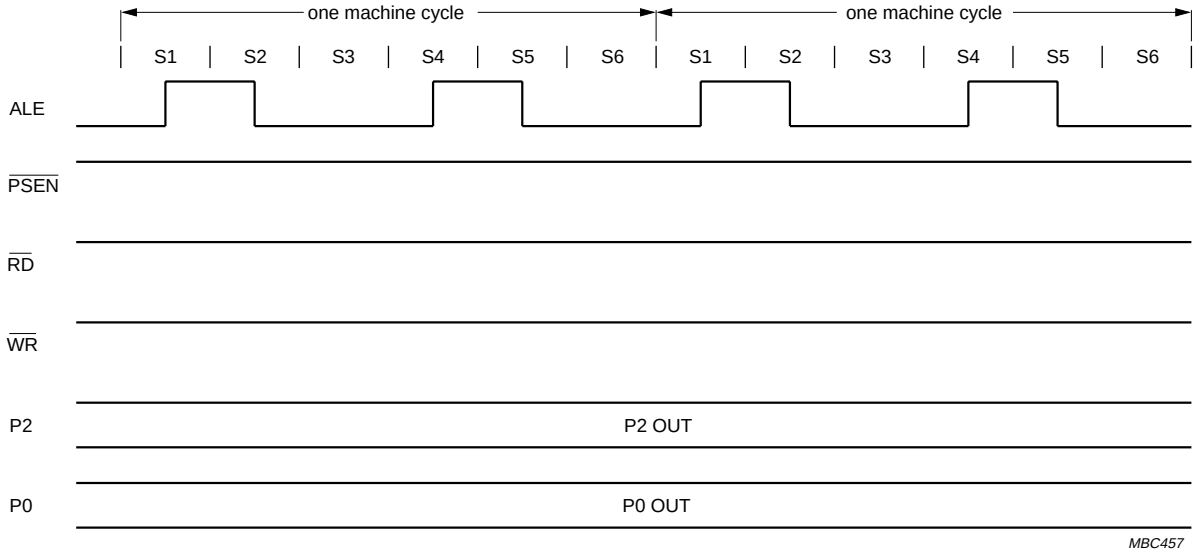

a. Without a MOVX.

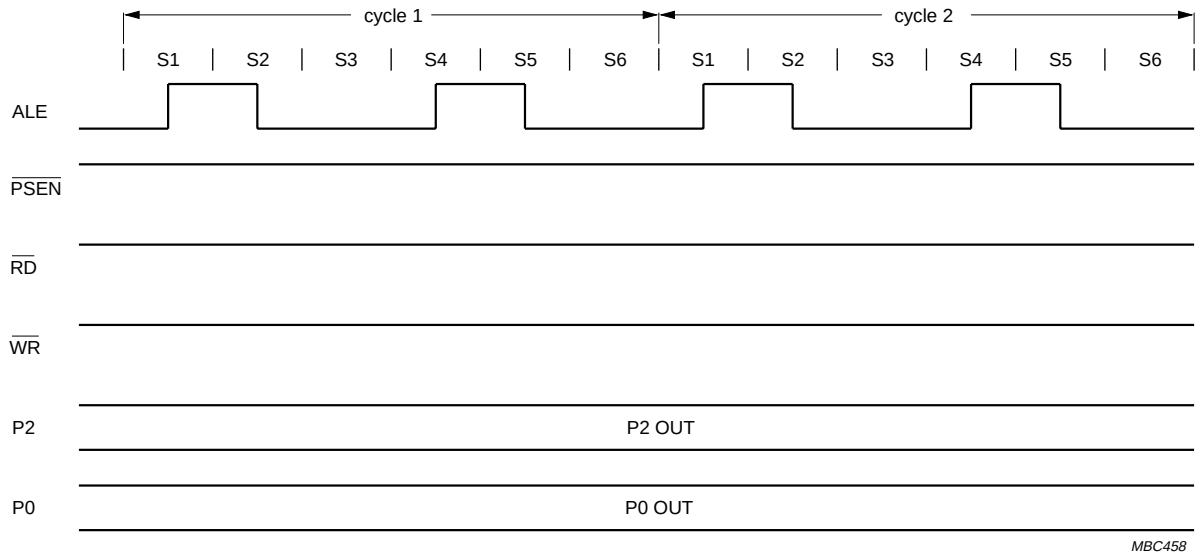

b. With a MOVX to the AUX-RAM (read and write).

Fig.7 Internal program memory execution.

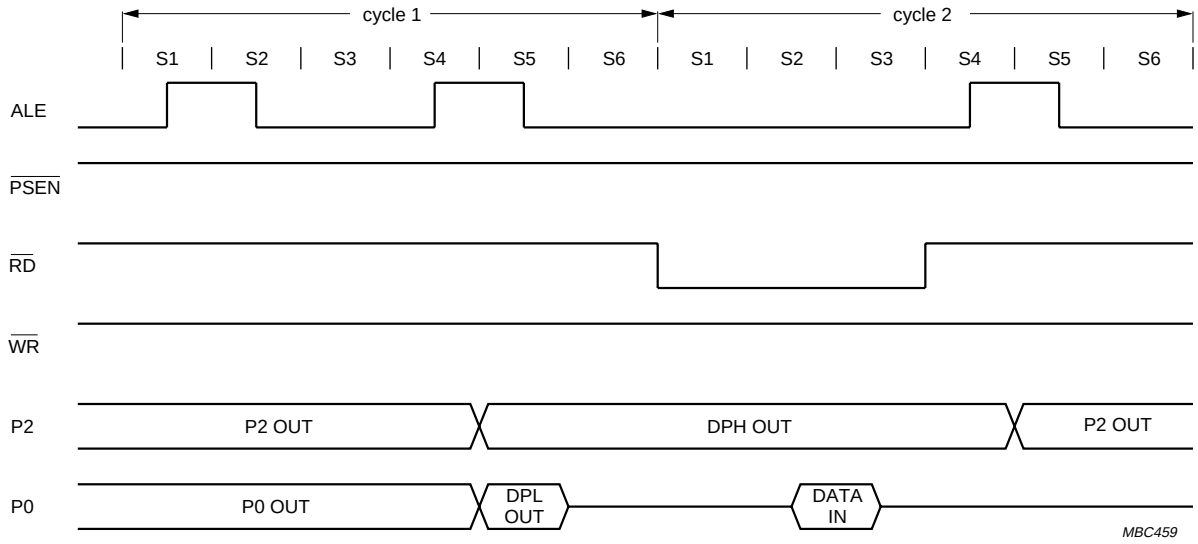

a. With a MOVX to the External Data Memory (read).

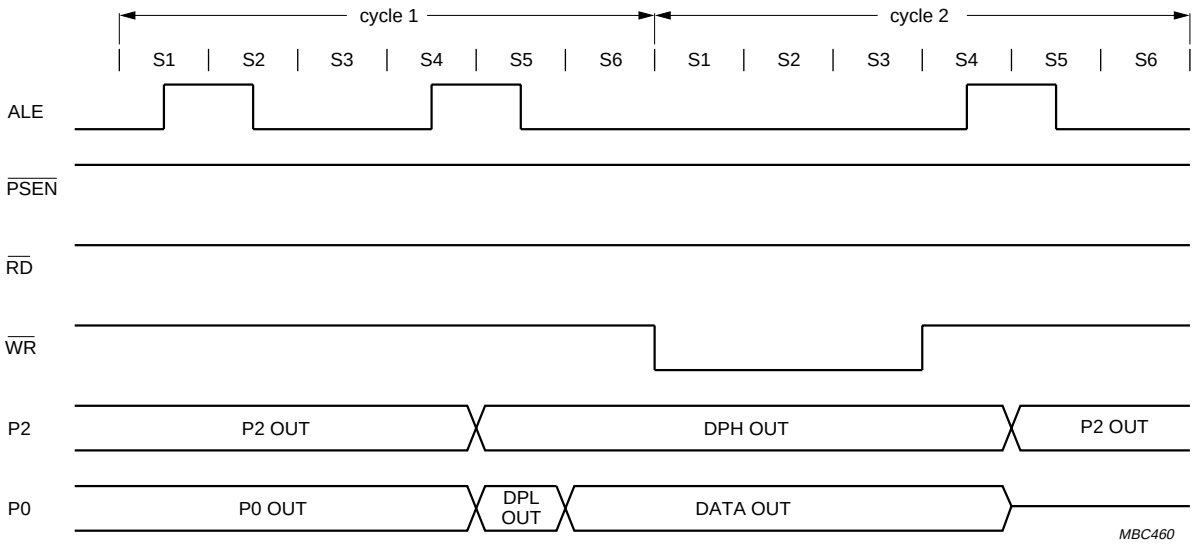

b. With a MOVX to the External Data Memory (write).

Fig.8 Internal program memory execution (continued).

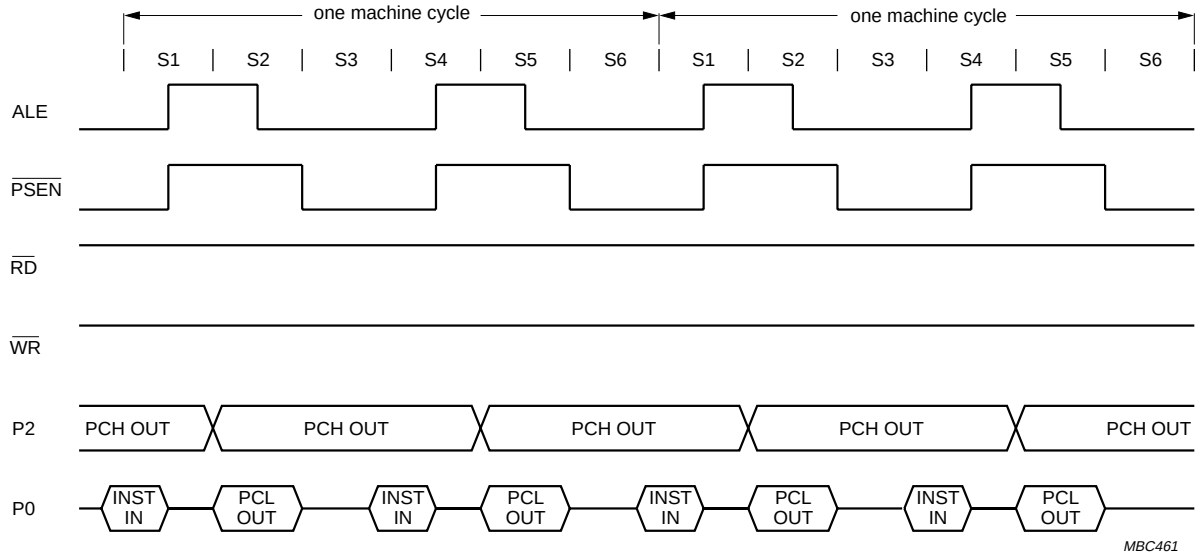

a. Without a MOVX.

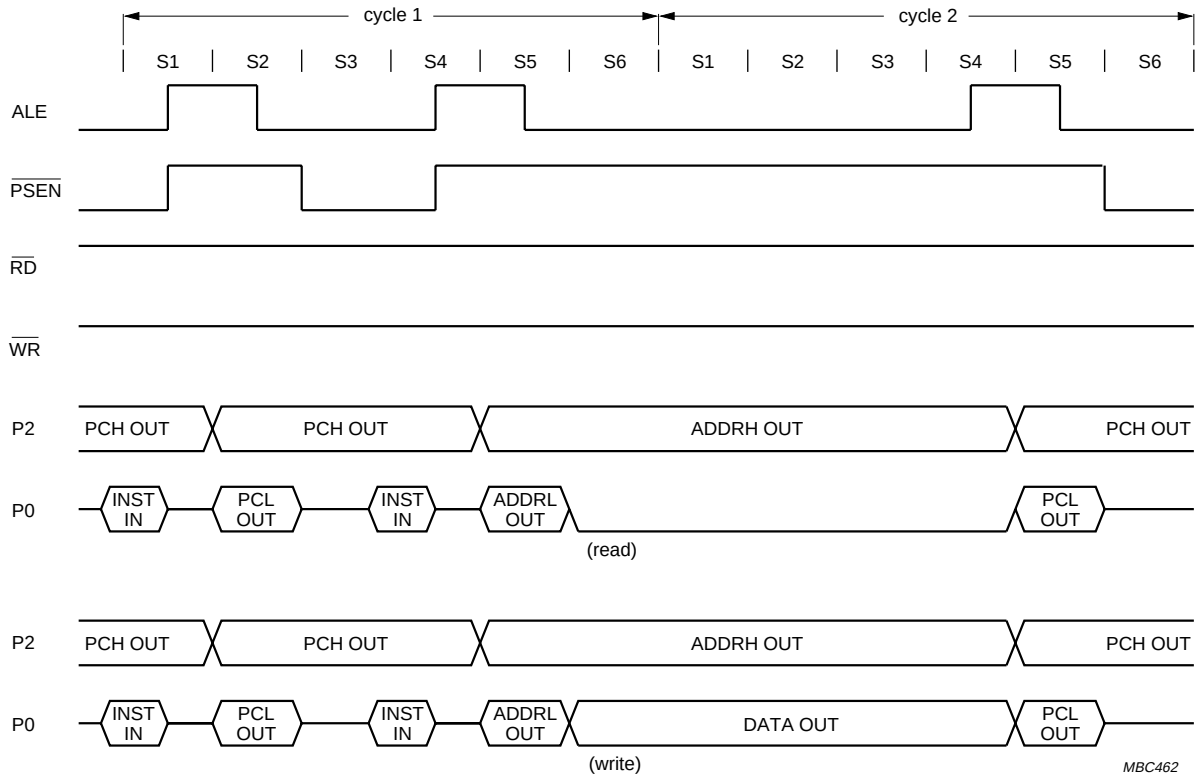

b. With a MOVX to the AUX-RAM (read and write).

Fig.9 External program memory execution.

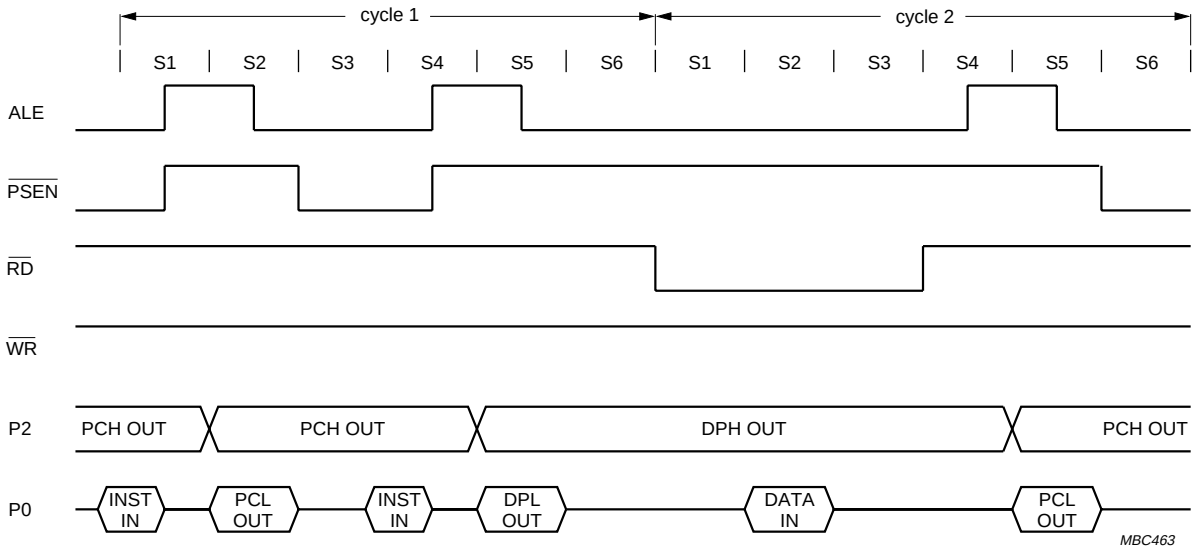

a. With a MOVX to the External Data Memory (read).

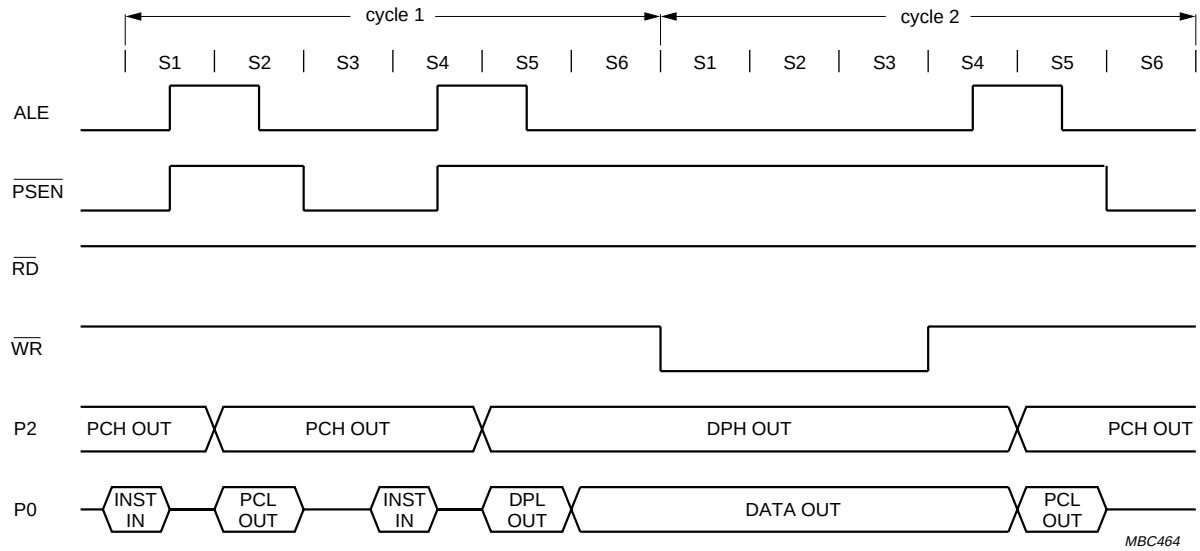

b. With a MOVX to the External Data Memory (write).

Fig.10 External program memory execution (continued).

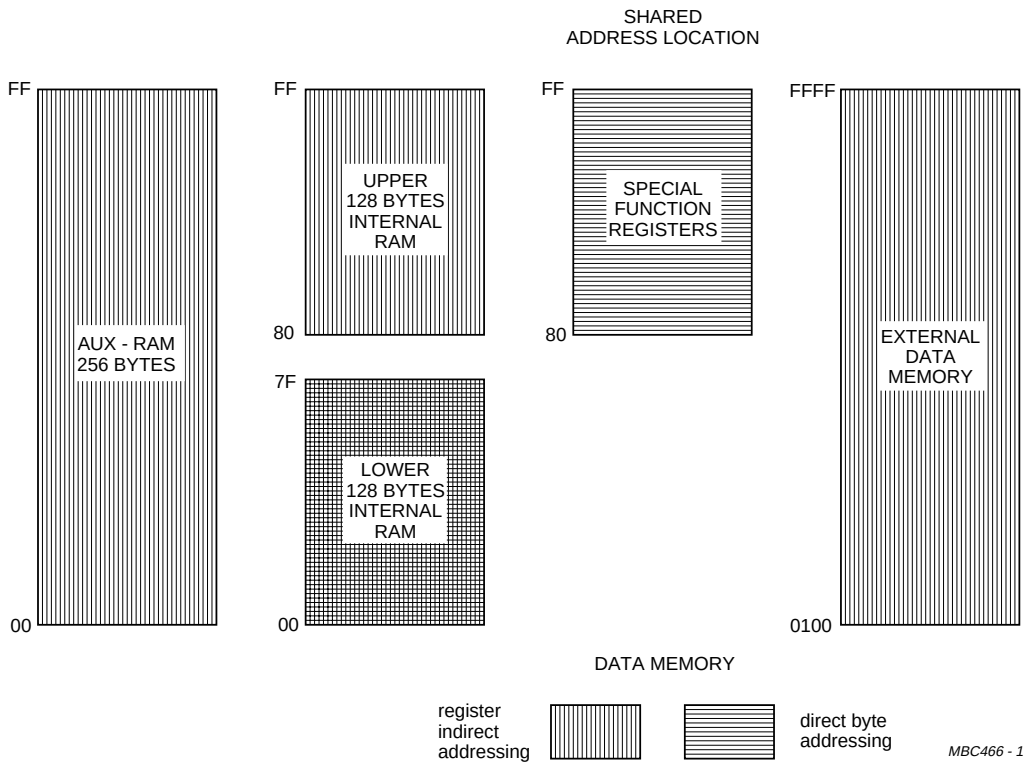

Fig.11 Internal and external data memory address space.

REGISTER MNEMONIC	BIT MNEMONIC / BIT ADDRESS (HEX)								DIRECT BYTE ADDRESS (HEX)
T3									FFH
B	F7	F6	F5	F4	F3	F2	F1	F0	F0H
ACC	E7	E6	E5	E4	E3	E2	E1	E0	E0H
S1INT									DAH
S1BIT									D9H
S1SCS	SDI/ SDO DF	SCI/ SCO DE	CLH DO	BB DC	RBF DB	WBF DA	STR D9	ENS D8	D8H
PSW	CY D7	AC D6	FO D5	RSI D4	RSO D3	OV D2	FI D1	P D0	D0H
TH2									CDH
TL2									CCH
RCAP2H									CBH
RCAP2L									CAH
T2CON	TF2 CF	EXF2 CE	RCLK CD	TCLK CC	EXEN2 CB	TR2 CA	C/$\overline{T2}$ C9	CP/$\overline{RL2}$ C8	C8H
IP	- - - BF	PS1 BE	PT2 BD	PS BC	PT1 BB	PX1 BA	PT0 B9	PX0 B8	B8H
P3	B7	B6	B5	B4	B3	B2	B1	B0	B0H
IE	EA AF	ES1 AE	ET2 AD	ES AC	ET1 AB	EX1 AA	ET0 A9	EX0 A8	A8H
WDCON									A5H
P2	A7	A6	A5	A4	A3	A2	A1	A0	A0H
SBUF									99H
SCON	SM0 9F	SM1 9E	SM2 9D	REN 9C	TB8 9B	RB8 9A	TI 99	RI 98	98H
P1	97	96	95	94	93	92	91	90	90H
TH1									8DH
TH0									8CH
TL1									8BH
TL0									8AH
TMOD									89H
TCON	TF1 8F	TR1 8E	TF0 8D	TR0 8C	IE1 8B	IT1 8A	IE0 89	IT0 88	88H
PCON									87H
DPH									83H
DPL									82H
SP									81H
P0	87	86	85	84	83	82	81	80	80H

MBC465 - 1

Fig.12 Special Function Register (SFR) memory map.

9.3 Addressing

The P83C528 has five modes for addressing:

- Register
- Direct
- Register-Indirect
- Immediate
- Base-Register plus Index-Register-Indirect.

The first three methods can be used for addressing destination operands. Most instructions have a 'destination/source' field that specifies the data type, addressing methods and operands involved. For operations other than MOVs, the destination operand is also a source operand.

Access to memory addresses is as follows:

- Register in one of the four 8-bit register banks through Register, Direct or Register-Indirect addressing.
- 512 bytes of internal RAM through Direct or Register-Indirect addressing. Bytes 0-127 of internal RAM may be addressed directly/indirectly. Bytes 128-255 of internal RAM share their address location with the SFRs and so may only be addressed indirectly as data RAM. Bytes 0-255 of AUX-RAM can only be addressed indirectly via MOVX.
- SFR through Direct addressing at address locations 128-255.
- External data memory through Register-Indirect addressing.
- Program memory look-up tables through Base-Register plus Index-Register-Indirect addressing.

10 I/O FACILITIES

The P83C528 has four 8-bit ports. Ports 0-3 are the same as in the 80C51, with the exception of the additional function of Port 1. Port lines P1.0 and P1.1 may be used as inputs for Timer 2, P1.1 may also be used as an additional (third) external interrupt request input. Port lines P1.6 and P1.7 may be selected as the SCL and SDA lines of Serial Port SIO1 (I^2C). Because the I^2C-bus may be active while the device is disconnected from V_{DD}, these pins are provided with open drain drivers. Pins P1.6 and P1.7 do not have pull-up devices when used as ports.

Ports 0, 1, 2, and 3 perform the following alternative functions:

- Port 0: provides the multiplexed low-order address and data bus used for expanding the P83C528 with standard memories and peripherals.
- Port 1: pins can be configured individually to provide: external interrupt request input (external interrupt 2); external inputs for Timer/counter 2; SCL and SDA for the I^2C interface.
- Port 2: provides the high-order address bus when expanding the P83C528 with external program memory and/or external data memory.
- Port 3: pins can be configured individually to provide: external interrupt request inputs (external interrupt 0/1); external inputs for Timer/counter 0 and Timer/counter 1; Serial Port receiver input and transmitter output control-signals to read and write external data memory.

Bits which are not used for the alternative functions may be used as normal bidirectional I/O pins. The generation or use of a Port 1 or Port 3 pin as an alternative function is carried out automatically by the P83C528 provided the associated SFR bit is HIGH. Otherwise the port pin is held at a logical LOW level.

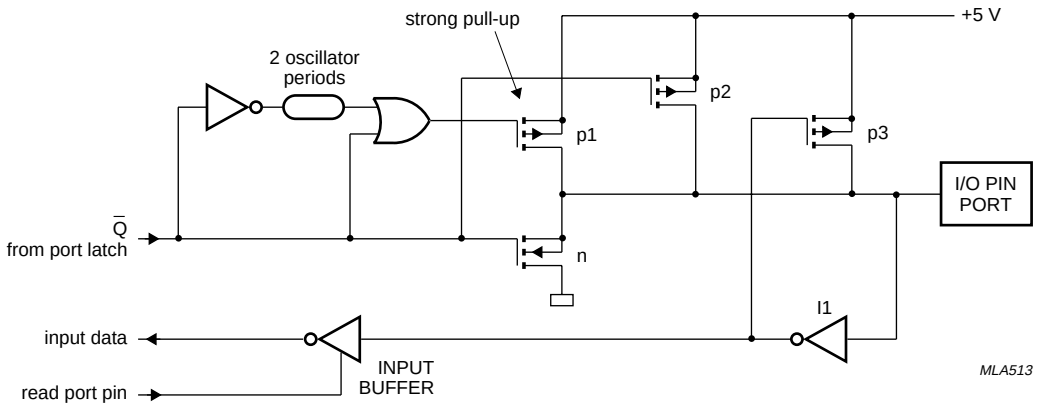

Fig.13 I/O buffers in the P83C528 (Ports 1, 2 and 3 except P1.6 and P1.7).

11 TIMERS/COUNTERS

The P83C528 contains three 16-bit timer/counters, Timer 0, Timer 1 and Timer 2, and one 8-bit timer, the Watchdog Timer T3. Timer 0, Timer 1 and Timer 2 may be programmed to carry out the following functions:

- measure time intervals and pulse durations
- count events
- generate interrupt requests.

11.1 Timer 0 and Timer 1

Timers 0 and 1 each have a control bit in TMOD SFR that selects the timer or counter function of the corresponding timer. In the timer function, the register is incremented every machine cycle. Thus, one can think of it as counting machine cycles. Since a machine cycle consists of 12 oscillator periods, the count rate is $^1/_{12}$ of the oscillator frequency.

In the counter function, the register is incremented in response to a HIGH-to-LOW transition at the corresponding external input pin, T0 or T1. In this function, the external input is sampled during S5P2 of every machine cycle. When the samples show a HIGH in one cycle and a LOW in the next cycle, the counter is incremented. Thus, it takes two machine cycles (24 oscillator periods) to recognize a HIGH-to-LOW transition. There are no restrictions on the duty cycle of the external input signal, but to ensure that a given level is sampled at least once before it changes, it should be held for at least one full machine cycle.

Timer 0 and Timer 1 can be programmed independently to operate in one of four modes:

Mode 0 8-bit timer/counter with divide-by-32 prescaler

Mode 1 16-bit timer/counter

Mode 2 8-bit timer/counter with automatic reload

Mode 3 Timer 0: one 8-bit timer/counter and one 8-bit timer. Timer 1: stopped.

When Timer 0 is in Mode 3, Timer 1 can be programmed to operate in Modes 0, 1 or 2 but cannot set an interrupt request flag and generate an interrupt. However, the overflow from Timer 1 can be used to pulse the Serial Port transmission-rate generator. With a 16 MHz crystal, the counting frequency of these timer/counters is as follows:

- in the timer function, the timer is incremented at a frequency of 1.33 MHz (oscillator frequency divided by 12).
- in the counter function, the frequency handling range for external inputs is 0 Hz to 0.66 MHz.

Both internal and external inputs can be gated to the timer by a second external source for directly measuring pulse duration.

The timers are started and stopped under software control. Each one sets its interrupt request flag when it overflows from all logic 1's to all logic 0's (respectively, the automatic reload value), with the exception of Mode 3 as previously described.

11.1.1 TIMER/COUNTER MODE CONTROL REGISTER (TMOD)

Table 4 Timer/Counter Mode Control register (address 89H)

7	6	5	4	3	2	1	0
TIMER 1				**TIMER 0**			
GATE	C/$\overline{T}$	M1	M0	GATE	C/$\overline{T}$	M1	M0

Table 5 Description of the TMOD bits

BIT	SYMBOL	FUNCTION
TIMER 1		
7	GATE	**Timer 1 gating control**: when set, Timer/counter '1' is enabled only while 'INT1' pin is HIGH and 'TR1' control bit is set. When cleared, Timer/counter '1' is enabled whenever 'TR1' control bit is set.
6	C/$\overline{T}$	**Timer or counter selector**: cleared for timer operation (input from internal system clock). Set for counter operation (input from 'T1' input pin).
5	M1	**operating mode**: see Table 6.
4	M0	**operating mode**: see Table 6.
TIMER 0		
3	GATE	**Timer 0 gating control**: when set, Timer/counter '0' is enabled only while 'INT0' pin is HIGH and 'TR0' control bit is set. When cleared, Timer/counter '0' is enabled whenever 'TR0' control bit is set.
2	C/$\overline{T}$	**Timer or counter selector**: cleared for timer operation (input from internal system clock). Set for counter operation (input from 'T0' input pin).
1	M1	**operating mode**: see Table 6.
0	M0	**operating mode**: see Table 6.

Table 6 TMOD M1 and M0 operating modes

M1	M0	FUNCTION
0	0	**8-bit timer/counter**: 'THx' with 5-bit prescaler.
0	1	**16-bit timer/counter**: 'THx' and 'TLx' are cascaded, there is no prescaler.
1	0	**8-bit autoload timer/counter**: 'THx' holds a value which is to be reloaded into 'TLx' each time it overflows.
1	1	**Timer 0**: TL0 is an 8-bit timer/counter controlled by the standard Timer 0 control bits. TH0 is an 8-bit timer controlled by Timer 1 control bits.
1	1	**Timer 1**: Timer/counter 1 stopped.

11.1.2 TIMER/COUNTER CONTROL REGISTER (TCON)

Table 7 Timer/Counter Control register (address 88H)

7	6	5	4	3	2	1	0
TF1	TR1	TF0	TR0	IE1	IT1	IE0	IT0

Table 8 Description of the TCON bits

BIT	SYMBOL	FUNCTION
7	TF1	**Timer 1 overflow flag**: set by hardware on timer/counter overflow. Cleared when interrupt is processed.
6	TR1	**Timer 1 run control bit**: set/cleared by software to turn timer/counter ON/OFF.
5	TF0	**Timer 0 overflow flag**: set by hardware on timer/counter overflow. Cleared when interrupt is processed.
4	TR0	**Timer 0 run control bit**: set/cleared by software to turn timer/counter ON/OFF.
3	IE1	**Interrupt 1 edge flag**: set by hardware when external interrupt is detected. Cleared when interrupt is processed.
2	IT1	**Interrupt 1 type control bit**: set/cleared by software to specify falling edge/LOW level triggered external interrupt.
1	IE0	**Interrupt 0 edge flag**: set by hardware when external interrupt is detected. Cleared when interrupt is processed.
0	IT0	**Interrupt 0 type control bit**: set/cleared by software to specify falling edge/LOW level triggered external interrupt.

11.2 Timer 2

Timer 2 is functionally similar to the Timer 2 of the 8052AH. Timer 2 is a 16-bit timer/counter which is formed by two SFRs, TL2 and TH2. Another pair of SFRs, RCAP2L and RCAP2H, form a 16-bit capture register or a 16-bit reload register. Like Timer 0 and 1, Timer 2 can operate either as timer or as event counter. This is selected by bit C/$\overline{T2}$ in the T2CON SFR. The timer has three operating modes: 'capture', 'autoload' and 'baud rate generator', which are selected by bits in the T2CON SFR (see Table 9).

Table 9 Timer 2 operating modes

RCLK + TCLK	CP/$\overline{RL2}$	TR2	MODE
0	0	1	16-bit automatic reload
0	1	1	16-bit capture
1	X	1	baud rate generator
X	X	0	OFF

11.2.1 Timer 2 Control Register (T2CON)

Table 10 Timer 2 Control register (address C8H)

7	6	5	4	3	2	1	0
TF2	EXF2	RCLK	TCLK	EXEN2	TR2	C/$\overline{T2}$	CP/$\overline{RL2}$

Table 11 Description of the T2CON bits

MNEMONIC	POSITION	FUNCTION
TF2	T2CON.7	**Timer 2 overflow flag**: set by a Timer 2 overflow and must be cleared by software. TF2 will not be set when either RCLK = 1 or TCLK = 1. When Timer 2 interrupt is enabled, TF2 = 1 (see EXF2).
EXF2	T2CON.6	**Timer 2 external flag**: set when either a capture or reload is caused by a negative transition on T2EX and EXEN2 = 1. When Timer 2 interrupt is enabled, EXF2 = 1 will cause the CPU to vector to Timer 2 interrupt routine.
RCLK	T2CON.5	**Receive clock flag**: when set, causes the Serial Port to use Timer 2 overflow pulses for its receive clock in Modes 1 and 3. RCLK = 0 causes Timer 1 overflows to be used for the receive clock.
TCLK	T2CON.4	**Transmit clock flag**: when set, causes the Serial Port to use Timer 2 overflow pulses for its transmit clock in Modes 1 and 3. TCLK = 0 causes Timer 1 overflows to be used for the transmit clock.
EXEN2	T2CON.3	**Timer 2 external enable flag**: when set, allows a capture or reload to occur as a result of a negative transition on T2EX if Timer 2 is not being used to clock the Serial Port. EXEN2 = 0 causes Timer 2 to ignore events at T2EX.
TR2	T2CON.2	**Start/stop control**: a logic 1 starts Timer 2. A logic 0 stops Timer 2.
C/$\overline{T2}$	T2CON.1	**Timer/counter select**: 0 = internal timer (OSC/12). 1 = external event counter (falling edge triggered).
CP/$\overline{RL2}$	T2CON.0	**Capture/reload flag**: when set, capture will occur on negative transitions at T2EX if EXEN2 = 1. When cleared, reloads will occur upon either Timer 2 overflows or negative transitions at T2EX if EXEN2 = 1. When either RCLK = 1 or TCLK = 1, this bit is ignored and the timer is forced to reload upon overflow.

11.2.2 CAPTURE MODE

In the capture mode (see Fig.14) there are two options which are selected by bit EXEN2 in T2CON. If EXEN2 = 0, then Timer 2 is a 16-bit timer/counter which on overflow sets bit TF2 (Timer 2 overflow bit). TF2 can be used to generate an interrupt. If EXEN2 = 1, Timer 2 operates as above, with the added feature that a HIGH-to-LOW transition at the external input T2EX causes the current value in Timer 2 registers (TL2 and TH2) to be captured into registers RCAP2L and RCAP2H, respectively. The HIGH-to-LOW transition of T2EX also causes bit EXF2 in T2CON to be set. EXF2 can be used to generate an interrupt.

11.2.3 AUTOMATIC RELOAD MODE

In the automatic reload mode (see Fig.15)there are two options which are selected by bit EXEN2 in T2CON. If EXEN2 = 0, then a Timer 2 overflow sets TF2 and causes the Timer 2 registers to be reloaded with the 16-bit value in registers RCAP2L and RCAP2H, which are preset by software.

If EXEN2 = 1, Timer 2 operates as above, with the added feature that a HIGH-to-LOW transition at the external input T2EX triggers the 16-bit reload and sets EXF2.

11.2.4 BAUD RATE GENERATOR MODE

The baud rate generator mode (see Fig.16) is selected by RCLK = 1 and/or TCLK = 1 in T2CON. Overflows of either Timer 2 or Timer 1 can be used independently for generating baud rates for transmit and receive. The baud rate generation by Timer 1 and/or Timer 2 is used for the Serial Port in Mode 1 and Mode 3. The baud rate generation mode is similar to the automatic reload mode, in that a rollover in TH2 causes the Timer 2 registers to be reloaded with the 16-bit value in registers RCAP2L and RCAP2H, which are preset by software. The baud rate for the Serial Port in Modes 1 and 3 are determined by Timer 2's overflow rate as follows:

$$\text{Baud Rate} = \frac{\text{Timer 2 overflow rate}}{16}$$

Timer 2 can be configured for either 'timer' or 'counter' operation. In timer operation a prescaler divides the oscillator frequency by 2 (by 12 in the previous modes) and the baud rate is given by the formula:

$$\text{Baud Rate} = \frac{\text{oscillator frequency}}{32 \times [65536 - (\text{RCAP2H,RCAP2L})]}$$

In this mode an overflow of Timer 2 does not set TF2. If EXEN2 = 1, a HIGH-to-LOW transition at pin T2EX sets EXF2 and can be used to generate an interrupt.

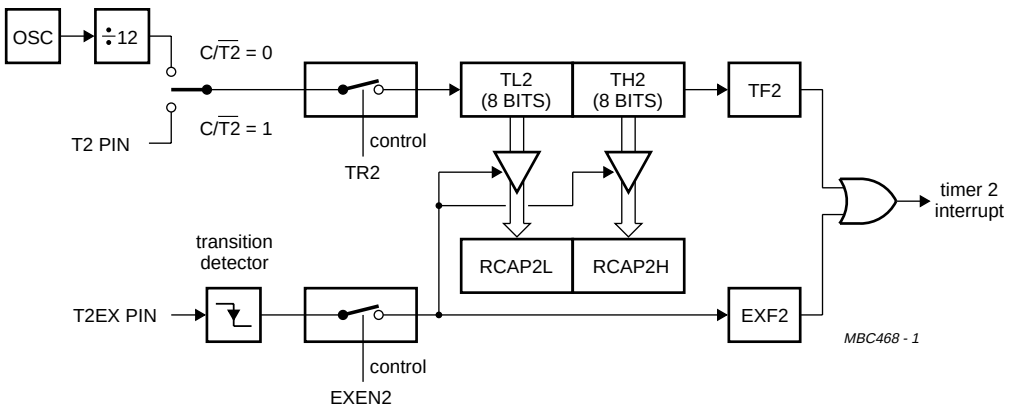

Fig.14 Timer 2 in capture mode.

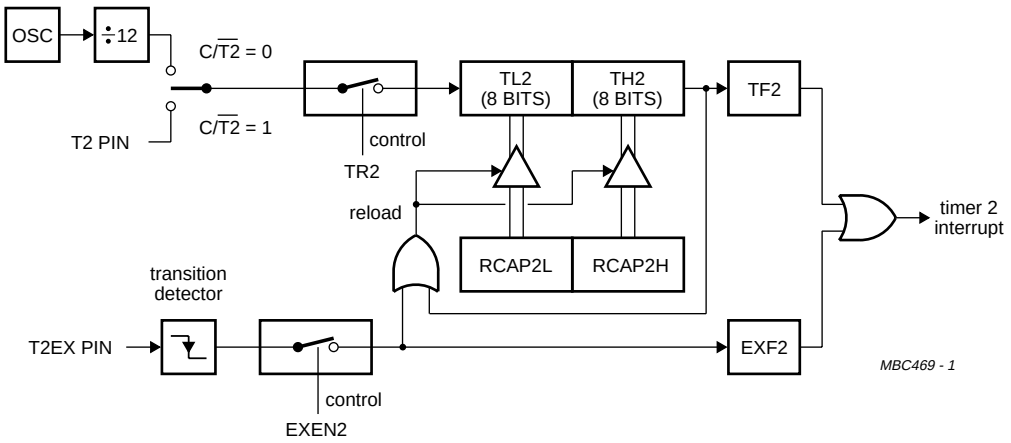

Fig.15 Timer 2 in automatic reload mode.

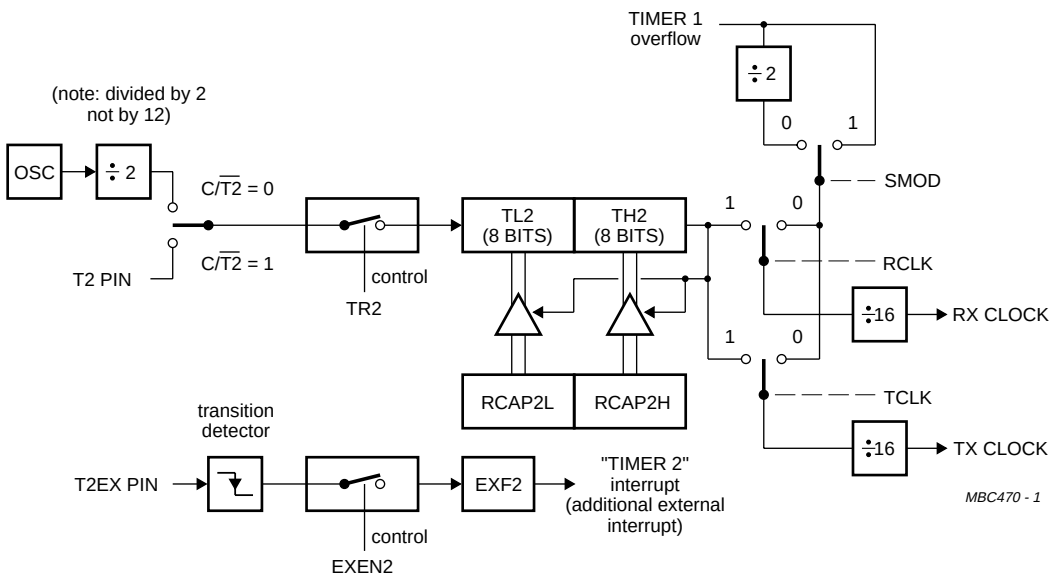

Fig.16 Timer 2 in baud rate generator mode.

11.3 Watchdog Timer T3

The Watchdog Timer (WDT) see Fig.17, consists of an 11-bit prescaler and an 8-bit timer formed by SFR T3. The prescaler is incremented by an on-chip oscillator with a fixed frequency of 1 MHz. The maximum tolerance on this frequency is –50% and +100%. The 8-bit timer increments every 2048 cycles of the on-chip oscillator. When a timer overflow occurs, the microcontroller is reset and a reset-output-pulse of 16 x 2048 cycles of the on-chip oscillator is generated at pin RST. The internal RESET signal is not inhibited when the external RST pin is kept LOW by e.g. an external reset circuit. The RESET signal drives Ports 1, 2 and 3 outputs into the High state and Port 0 into high impedance, no matter if the XTAL-clock is running or not.

The WDT is controlled by WDCON SFR with the direct address location A5H. WDCON can be read and written by software. A value of A5H in WDCON halts the on-chip oscillator and clears both the prescaler and Timer T3. After RESET, WDCON contains A5H. Every value other than A5H in WDCON enables the WDT. When the WDT is enabled it runs independent of the XTAL-clock.

Timer T3 can be read on the fly. Timer T3 can be written only if WDCON has previously been loaded with 5AH, otherwise T3 and the prescaler are not affected. A successful write operation to T3 also clears the prescaler and clears WDCON. During a read or write operation addressing T3, the output of the on-chip oscillator is inhibited to prevent timing problems due to asynchronous increments of T3. To prevent an overflow of the WDT, the user program has to reload T3 within periods that are shorter than the programmed Watchdog time interval. This time interval is determined by the 8-bit reload value that is written into register T3.

$$\text{Watchdog time interval} = \frac{[256 - (T3)] \times 2048}{\text{on-chip oscillator frequency}}$$

The advantages of this implementation are:

- Only an internal reset connection to the microcontroller core
- The Power-down mode and the Watchdog (WDT) function can be used concurrently
- The WDT also monitors the XTAL oscillator. In case of a failure the port outputs are forced to a defined High state
- Interference will not disable the WDT because it is unlikely that it will force WDCON to A5H
- Tolerances of the on-chip oscillator can be adjusted by testing the T3 value and adapting the reload value
- The WDT can be enabled and disabled under control of the user software. This gives the possibility to use both the Watchdog function and the Power-down function
- The direct address A5H of WDCON and its disable value A5H will not unintentionally be present at a random location in the field of program code, except for immediate data, because the opcode A5H is not used in the instruction set.

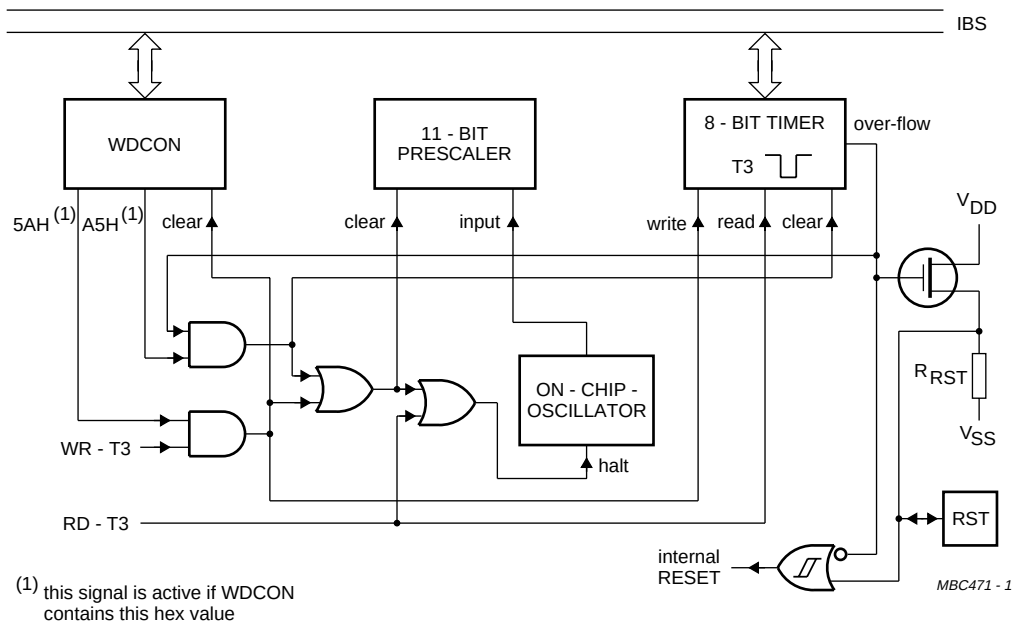

(1) this signal is active if WDCON contains this hex value

Fig.17 Watchdog Timer T3.

12 SERIAL PORT (UART)

The Serial Port is functionally similar to the implementation in the 8052AH, with the possibility of two different baud rates for receive and transmit with Timer 1 and Timer 2 as baud rate generators. It is full duplex, meaning it can receive and transmit simultaneously. It is also receive-buffered, meaning it can commence reception of a second byte before a previously received byte has been read from the receive register. However, if the first byte still has not been read by the time the reception of the second byte is complete, one of the bytes will be lost. The Serial Port receive and transmit registers are both accessed as SBUF SFR. Writing to SBUF loads the transmit register, and reading SBUF accesses the physically separate receive register. The Serial Port can operate in one of four modes:

Mode 0 serial data enters and exits through RXD. TXD outputs the shift clock. 8 bits are transmitted/received: 8 data bits (LSB first). The baud rate is fixed at 1/12 the oscillator frequency.

Mode 1 10 bits are transmitted (through TXD) or received (through RXD): a start bit (0), 8 data bits (LSB first), and a stop bit (1). On receive, the stop bit goes into RB8 in SCON SFR. The baud rate is variable.

Mode 2 11 bits are transmitted (through TXD) or received (through RXD): a start bit (0), 8 data bits (LSB first), a programmable 9th data bit, and a stop bit (1). On transmit, the 9th data bit (TB8 in SCON) can be assigned the value of 0 or 1. For example, the parity bit (P, in the PSW) could be moved into TB8. On receive, the 9th data bit goes into RB8 in SCON, while the stop bit is ignored. The baud rate is programmable to either 1/32 or 1/64 the oscillator frequency.

Mode 3 11 bits are transmitted (through TXD) or received (through RXD): a start bit (0), 8 data bits (LSB first), a programmable 9th data bit, and a stop bit (1). In fact, Mode 3 is the same as Mode 2 in all respects except the baud rate. The baud rate in Mode 3 is variable.

In all four modes, transmission is initiated by any instruction that uses SBUF as a destination register. In Mode 0, reception is initiated by the condition RI = 0 and REN = 1. Reception is initiated by incoming start bit if REN = 1 in the other modes.

12.1 Serial Port Control Register (SCON)

Table 12 Serial Port Control register (address 98H)

7	6	5	4	3	2	1	0
SM0	SM1	SM2	REN	TB8	RB8	TI	RI

Table 13 Description of the SCON bits

BIT	SYMBOL	FUNCTION
7	SM0	see Table 14.
6	SM1	see Table 14.
5	SM2	**Enables the multiprocessor communication feature in Modes 2 and 3**. In these modes, if SM2 is set to 1 then RI will not be activated if the received 9th data bit (RB8) is 0. In Mode 1, if SM2 = 1, then RI will not be activated if a valid stop bit is not received. In Mode 0, SM2 should be 0.
4	REN	**Enables serial reception**. Set and cleared by software as required.
3	TB8	**9th data bit that will be transmitted in Modes 2 and 3**. Set and cleared by software as required.
2	RB8	**In Modes 2 and 3, RB8 is the 9th data bit that is received**. In Mode 1, if SM2 = 0, RB8 is the stop bit that is received. In Mode 0, RB8 is not used.
1	TI	**Transmit interrupt flag**. It is set by hardware at the end of the 8th bit time in Mode 0, or at the beginning of the stop bit in the other modes. TI must be cleared by software.
0	RI	**Receive interrupt flag**. It is set by hardware at the end of the 8th bit time in Mode 0, or halfway through the stop bit time in the other modes (except: see SM2). RI must be cleared by software.

12.2 SM0 and SM1 operating modes (SCON)

SCON bits SM0 and SM1 can operate in the following modes (see Table 14):

Table 14 SM0 and SM1 operating modes

MODE	SM0	SM1	DESCRIPTION	BAUD RATE
0	0	0	shift register	$\frac{1}{12}f_{OSC}$
1	0	1	8-bit UART	variable
2	1	0	9-bit UART	$\frac{1}{32}f_{OSC}$, $\frac{1}{64}f_{OSC}$
3	1	1	9-bit UART	variable

13 BIT-LEVEL I²C INTERFACE

This bit-level serial I/O interface supports the I²C-bus (see Fig.18). P1.6/SCL and P1.7/SDA are the serial I/O pins. These two pins meet the I²C specification concerning the input levels and output drive capability. Consequently, these pins have an open drain output configuration. All four modes of the I²C-bus are supported:

- master transmitter
- master receiver
- slave transmitter
- slave receiver.

The advantages of the bit-level I²C hardware compared with a full software I²C implementation are:

- the hardware can generate the SCL pulse
- testing a single bit (RBF respectively, WBF) is sufficient as a check for error free transmission.

The bit-level I²C hardware operates on serial bit level and performs the following functions:

- filtering the incoming serial data and clock signals
- recognizing the START condition
- generating a serial interrupt request SI after reception of a START condition and the first falling edge of the serial clock
- recognizing the STOP condition
- recognizing a serial clock pulse on the SCL line
- latching a serial bit on the SDA line (SDI)
- stretching the SCL LOW period of the serial clock to suspend the transfer of the next serial data bit
- setting Read Bit Finished (RBF) when the SCL clock pulse has finished and Write Bit Finished (WBF) if there is no arbitration loss detected (i.e. SDA = 0 while SDO = 1)
- setting a serial clock LOW-to-HIGH detected (CLH) flag
- setting a Bus Busy (BB) flag on a START condition and clearing this flag on a STOP condition
- releasing the SCL line and clearing the CLH, RBF and WBF flags to resume transfer of the next serial data bit
- generating an automatic clock if the single bit data register S1BIT is used in master mode.

The following functions must be done in software:

- handling the I²C START interrupts
- converting serial to parallel data when receiving
- converting parallel to serial data when transmitting
- comparing the received slave address with its own
- interpreting the acknowledge information
- guarding the I²C status if RBF or WBF = 0.

additionally, if acting as master:

- generating START and STOP conditions
- handling bus arbitration
- generating serial clock pulses if S1BIT is not used.

Three SFRs control the bit-level I²C interface: S1INT, S1BIT and S1SCS.

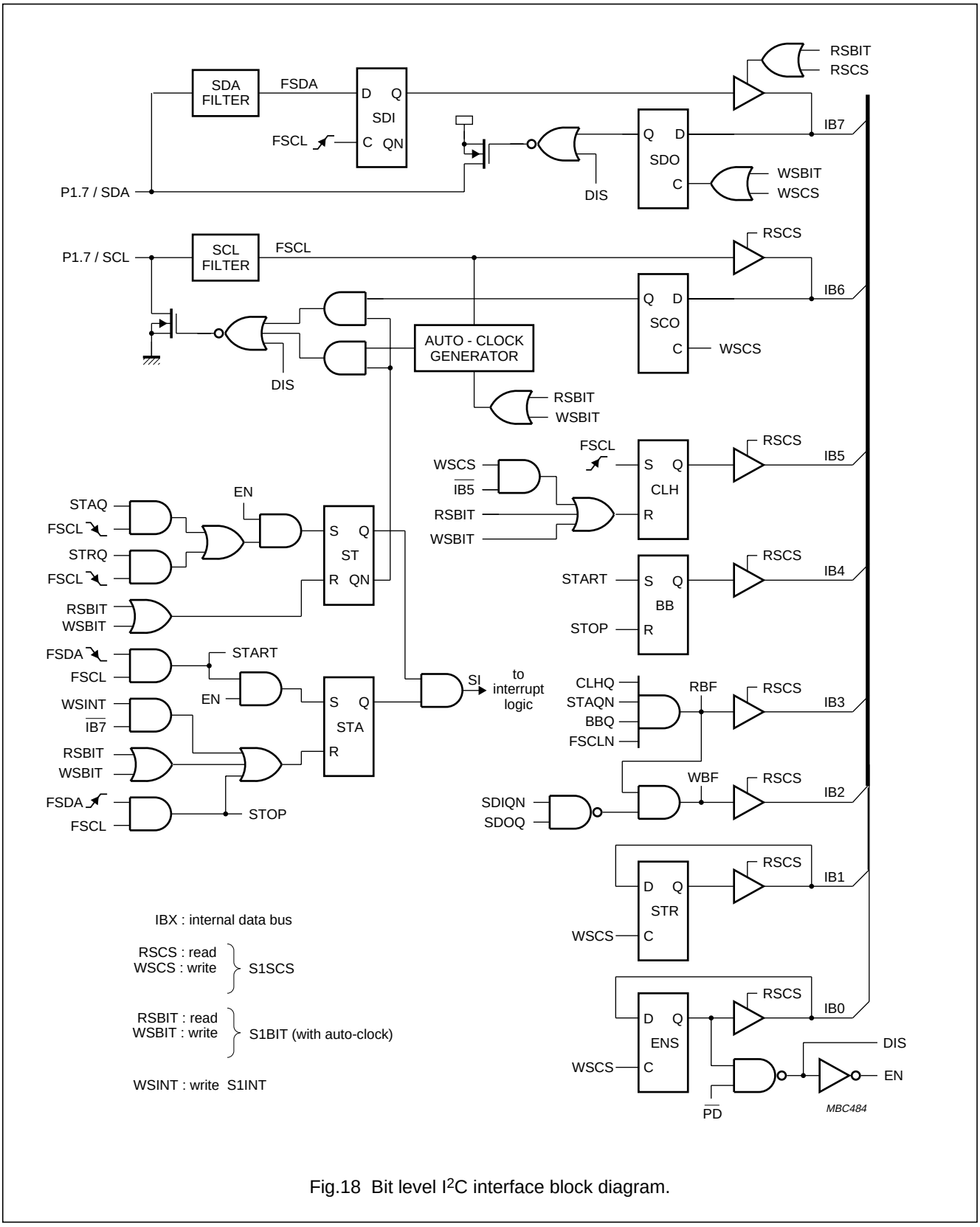

Fig.18 Bit level I²C interface block diagram.

13.1 I²C Interrupt Register (S1INT)

Table 15 I²C Interrupt register (address DAH) (1)

7	6	5	4	3	2	1	0
SI	X	X	X	X	X	X	X

Note

1. **SI bit**: writing a logic 0 clears this bit, writing a logic 1 has no effect.

Table 16 Description of the S1INT bits

BIT	SYMBOL	FUNCTION
7	SI	**Serial Interrupt request (SI) flag**: if a START condition occurs the SI flag in the S1INT SFR is set on the falling edge of the filtered serial clock. If SI = 1 is detected during a transfer this can be a 'spurious START' error condition. If no transfer is taking place the SI = 1 is a START from an external master. Provided the bits EA and ES1 in IE SFR are set, SI then generates an interrupt so that a slave address receive routine can be started. SI can be cleared by accessing the S1BIT register or by writing '00' to S1INT. Also after reception of a START condition, the LOW period of the clock pulse is stretched, suspending the serial transfer to allow the software to take action. This clock stretching is ended by a read or write access to S1BIT.
6 to 0	–	X = undefined during read, don't care during write.

13.2 Single-bit Data Register with I²C Auto-clock (S1BIT)

Table 17 Single-bit Data register with I²C Auto-clock (address D9H)(1)

7	6	5	4	3	2	1	0
READ							
SDI	0	0	0	0	0	0	0
WRITE							
SDO	X	X	X	X	X	X	X

Note

1. Access of the **S1BIT SFR** clears SI, CLH, RBF and WBF. It starts the auto-clock if SCO = 0.

Table 18 Description of the S1BIT bits

BIT	SYMBOL	FUNCTION
7	SDO/SDI	**Serial Data Output (SDO) and the filtered Serial Data Input (SDI)**. SDI data is latched on the rising edge of the filtered serial clock. S1BIT.7 accesses the same memory locations as S1SCS.7. S1BIT SFR is not bit-addressable.
6 to 0	–	X = don't care.

13.2.1 READING OR WRITING THE S1BIT SFR

Reading or writing the S1BIT SFR starts an I^2C bit I/O sequence: some flags are cleared (SI, CLH, RBF, WBF), clock stretching is finished and the auto-clock is started. An auto-clock pulse is 'OR-ed' with SCO and thus will be output only if the SCO flag has been set to 0. SCO = 1 inhibits the auto-clock start, so a dummy read or write of S1BIT SFR can be used to finish clock stretching and clear SI, CLH, RBF and WBF if the auto-clock is not used.

The auto-clock is an active HIGH SCL pulse that starts 28 XTAL clock periods after the SDI read or SDO write via S1BIT. The duration of the auto-clock pulse is 100 XTAL clock periods. If the SCL line is kept LOW by any device that wants to hold up the bus transfer, the auto-clock counter waits after 20 XTAL clock periods so that the auto-clock pulse length will be at least 80 XTAL clock periods (5 µs at f_{OSC} = 16 MHz).

Every bit I/O should be followed by a RBF or WBF bit test. A bit transfer has been finished successfully if after reading a bit the RBF flag is 1 or after writing a bit the WBF flag is 1. When after reading a bit the RBF flag is still 0, the bus status just before the S1SCS status read can be determined as follows:

- if CLH = 0 then a bus device is still stretching the clock
- if SCI = 1 while CLH = 1 then the SCL pulse is not finished
- if BB = 0 there has been a STOP condition.

When after writing a bit the WBF flag is still 0 and none of the 3 status conditions mentioned for RBF are found then a 'bus arbitration lost' condition will be the cause. This can be determined also from the states of the received bit and the last transmitted bit: 'arbitration loss' if SDO = 1 and SDI = 0.

13.3 Control and Status Register for the I^2C-bus (S1SCS)

Table 19 Control and Status register for the I^2C-bus (address D8H)

7	6	5	4	3	2	1	0
READ							
SDI(1)	SCI(1)	CLH(2)	BB	RBF(3)	WBF(4)	STR	ENS
WRITE							
SDO	SCO	CLH(2)	X	X	X	STR	ENS

Notes

1. **SDI and SCI bits**: read-modify-write operations like 'SETB bit' or 'CLR bit' access SDO and SCO for reading and writing.
2. **CLH bit**: writing a logic 0 clears this bit, writing a 1 has no effect.
3. **RBF and WBF bits**: writing a logic 0 to CLH also clears these bits.
4. X = don't care.

Table 20 Description of the S1SCS bits

BIT	SYMBOL	FUNCTION
7	SDO/SDI	**Serial Data Output and the filtered Serial Data Input**. SDI data is latched on the rising edge of the filtered serial clock. S1SCS.7 accesses the same memory locations as S1BIT.7. Access of the data bit via S1SCS will not start an auto-clock pulse.
6	SCO/SCI	**Serial Clock Output and the filtered Serial Clock Input**. Serial clock output SCO is 'OR-ed' with the auto-clock. If SCO = 1 the auto-clock output is inhibited. The internal clock stretching logic and external devices can pull the SCL line LOW. If the auto-clock is not used, the SCL line has to be controlled by setting SCO = 1, waiting for CLH = 1 and setting SCO = 0 after the specified SCL HIGH time. (Because of the input filter, CLH will be set at least 8 XTAL clock periods after the SCL LOW-to-HIGH transition.)
5	CLH	**Serial Clock LOW-to-HIGH transition flag**: set with a rising edge of the filtered serial clock. CLH = 1 indicates that, since the last CLH reset, a new valid data bit has been latched in SDI. CLH can be reset by writing a 0 to S1SCS.5 or by a read/write of S1BIT. Clearing CLH also clears RBF and WBF.
4	BB	**Bus Busy flag**: indicating that there has been a START condition that was not yet followed by a STOP condition.
3	RBF	**Read Bit Finished flag**: indicating a successful bit read. RBF = 1 implies the following conditions: CLH = 1: SCL had a rising edge SCI = 0: the SCL pulse has finished SI = 0: no START condition occurred BB = 1: no STOP condition occurred The RBF flag can be cleared by clearing the CLH flag.
2	WBF	**Write Bit Finished flag**: indicating a successful bit write. The same conditions as for RBF are true and also no 'arbitration loss' condition occurred. Arbitration is lost if a 1 data bit in SDO was over-ruled on SDA by an external device. The WBF flag can be cleared by clearing the CLH flag.
1	STR	**STRetch control flag**. STR = 1 enables stretching of all SCL LOW periods. This allows the processor in I^2C slave mode to react on a fast master. The STR flag remains set until cleared by writing a 0 to S1SCS.1. **The STretch (ST)** flag (not readable) pulls the serial clock LOW while ST = 1. The ST flag is set on the falling edge of the filtered serial clock if STR = 1. It is also set after reception of a START condition, regardless of the STR contents. ST is cleared with a read or write of S1BIT.
0	ENS	**ENable Serial I/O flag**. ENS = 1 enables the START detection and clock stretching logic. ENS = 0 can be used to switch off the I^2C-bus hardware. Note that the SDO and SCO control flags must be set to 1 before ENS is set to avoid pulling SCL or SDA lines to 0.

14 INTERRUPT SYSTEM

The P83C528 contains the same interrupt structure as the PCB80C51BH, but with a seven-source interrupt structure with two priority levels (see Fig.19).

The External Interrupts $\overline{INT0}$ and $\overline{INT1}$ can each be either level-activated or transition-activated, depending on bits IT0 and IT1 in TCON SFR. The flags that actually generate these interrupts are bits IE0 and IE1 in TCON. When an external interrupt is generated, the corresponding request flag is cleared by the hardware when the service routine is vectored to, only if the interrupt was transition-activated. If the interrupt was level-activated then the interrupt request flag remains set until the external interrupt pin INTx goes high.

The Timer 0 and Timer 1 Interrupts are generated by TF0 and TF1, which are set by a rollover in their respective timer/counter register (except for Timer 0 in Mode 3 of the serial interface). When a Timer interrupt is generated, the flag that generated it is cleared by the on-chip hardware when the service routine is vectored to.

The Serial Port Interrupt is generated by the logical 'OR' of RI and TI. Neither of these flags is cleared by hardware. The service routine will normally have to determine whether it was RI or TI that generated the interrupt, and the bit will have to be cleared by software.

The Timer 2 Interrupt is generated by the logical OR of TF2 and EXF2. Neither of these flags is cleared by hardware. In fact the service routine may have to determine whether it was TF2 or EXF2 that generated the interrupt, and the bit will have to be cleared by software.

An additional (third) external interrupt is available, if Timer 2 is not used as timer/counter or if Timer 2 is used in baud rate generator mode. That external interrupt 2 is falling edge triggered. It shares the Timer 2 interrupt vector, interrupt enable and interrupt priority bits. If bit T2CON.3/EXEN2 = 1, a HIGH-to-LOW transition at pin P1.1/T2EX sets the interrupt request flag T2CON.6/EXF2 and can be used to generate an external interrupt.

The I^2C interrupt is generated by SI in S1INT. This flag has to be cleared by software. All of the bits that generate interrupts can be set or cleared by software, with the same result as though they had been set or cleared by hardware, with the exception of the I^2C interrupt request flag SI, which cannot be set by software. That is, interrupts can be generated or pending interrupts can be cancelled in software.

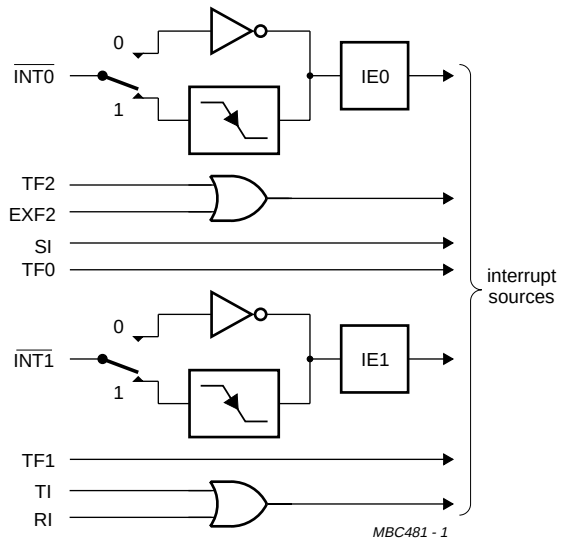

Fig.19 P83C528 Interrupt Sources.

14.1 Interrupt Enable Register (IE)

Table 21 Interrupt Enable register (address A8H)

7	6	5	4	3	2	1	0
EA	ES1	ET2	ES	ET1	EX1	ET0	EX0

Table 22 Description of the IE bits

BIT	SYMBOL	FUNCTION
7	EA	general enable/disable control: 0 = **NO** interrupt is enabled 1 = **ANY** individually enabled interrupt will be accepted
6	ES1	enable **bit-level I^{2}C I/O** interrupt
5	ET2	enable **Timer 2** interrupt
4	ES	enable **Serial Port** interrupt
3	ET1	enable **Timer 1** interrupt
2	EX1	enable **External** interrupt 1
1	ET0	enable **Timer 0** interrupt
0	EX0	enable **External** interrupt 0

14.2 Interrupt Priority Register (IP)

Table 23 Interrupt Priority register (address B8H)

7	6	5	4	3	2	1	0
–	PS1	PT2	PS	PT1	PX1	PT0	PX0

14.3 Interrupt Vectors

The interrupt vectors are listed in Table 25.

Table 24 Description of the IP bits

BIT	SYMBOL	FUNCTION
7	–	**reserved**
6	PS1	**Bit-level I^2C** interrupt priority level
5	PT2	**Timer 2** interrupt priority level
4	PS	**Serial Port** interrupt priority level
3	PT1	**Timer 1** interrupt priority level
2	PX1	**External interrupt 1** priority level
1	PT0	**Timer 0** interrupt priority level
0	PX0	**External interrupt 0** priority level

Table 25 Interrupt vectors

NUMBER	SOURCE	PRIORITY WITHIN LEVEL	VECTOR ADDRESS
1	IE0	(highest)	0003H
2	TF2+EXF2	–	002BH
3	SI (I^2C)	–	0053H
4	TF0	–	000BH
5	IE1	–	0013H
6	TF1	–	001BH
7	RI + TI	(lowest)	0023H

15 IDLE AND POWER-DOWN OPERATION

Idle mode operation permits the interrupt, serial ports and timer blocks to function while the CPU is halted. The following functions remain active during Idle mode. These functions may generate an interrupt or reset and thus end the Idle mode:

- Timer 0, Timer 1, Timer 2, Watchdog Timer
- UART, I^2C-Interface
- External interrupt

The Power-down operation freezes the oscillator. The Power-down mode can only be activated by setting the PD bit in the PCON register (see Fig.20).

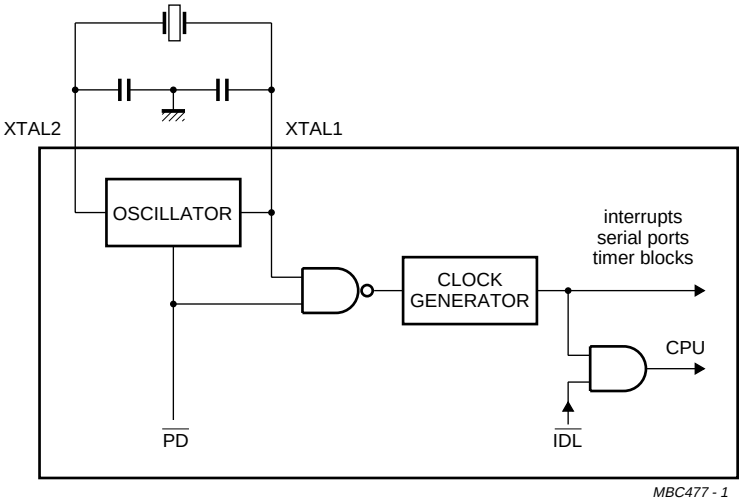

Fig.20 Internal Idle and Power-down clock configuration.

15.1 Power Control Register (PCON)

Special modes are activated by software via the PCON SFR. PCON is not bit addressable. The reset value of PCON is 0XXX0000.

Table 26 Power Control Register (address 87H)

7	6	5	4	3	2	1	0
SMOD	–	–	–	GF1	GF0	PD	IDL

Table 27 Description of the PCON bits

BIT	SYMBOL	FUNCTION
7	SMOD	**Double Baud rate bit**: when set to logic 1 the baud rate is doubled when Timer 1 is used to generate baud rate, and the Serial Port is used in modes 1, 2 or 3.
6	–	**reserved** for future use
5	–	**reserved** for future use
4	–	**reserved** for future use
3	GF1	**general-purpose** flag bit
2	GF0	**general-purpose** flag bit
1	PD	**Power-down bit**: setting this bit activates Power-down mode
0	IDL	**Idle mode bit**: setting this bit activates the Idle mode.

Notes

1. If logic 1s are written to PD and IDL at the same time, PD takes precedence.
2. User software should not write 1s to reserved bits. These bits may be used in future 80C51 family products to invoke new features.

15.2 Idle Mode

The instruction that sets PCON.0 is the last instruction executed in the normal operating mode before Idle mode is activated. Once in the Idle mode, the CPU status is preserved in its entirety: the Stack Pointer, Program Counter, Program Status Word, Accumulator, RAM and all other registers maintain their data during Idle mode. The status of external pins during Idle mode is shown in Table 28.

There are three ways to terminate the Idle mode:

- Activation of any enabled interrupt will cause PCON.0 to be cleared by hardware terminating Idle mode. The interrupt is serviced, and following return from interrupt instruction RETI, the next instruction to be executed will be the one which follows the instruction that wrote a logic 1 to PCON.0.
- The flag bits GF0 and GF1 may be used to determine whether the interrupt was received during normal execution or during the Idle mode. For example, the instruction that writes to PCON.0 can also set or clear one or both flag bits. When Idle mode is terminated by an interrupt, the service routine can examine the status of the flag bits.
- The second way of terminating the Idle mode is with an external hardware reset. Since the oscillator is still running, the hardware reset is required to be active for two machine cycles (24 oscillator periods) to complete the reset operation.
- The third way of terminating the Idle mode is by internal watchdog reset.

15.3 Power-down Mode

The instruction that sets PCON.1 is the last executed prior to going into the Power-down mode. The oscillator is stopped. Note that the Power-down mode also can be entered when the watchdog has been enabled. The Power-down mode can be terminated by an external RESET in the same way as in the 80C51 or in addition by any one of the two external interrupts, IE0 or IE1 (see Section 15.4). A reset generated by the WDT terminates the Power-down mode in the same way as an external RESET.

The status of the external pins during Power-down mode is shown in Table 28. If the Power-down mode is activated while in external program memory, the port data that is held in the P2 SFR is restored to Port 2. If the data is a logic 1, the port pin is held HIGH during the Power-down mode by the strong pull-up transistor p1 (see Fig.13).

Table 28 Status of the external pins during Idle and Power-down modes

MODE	MEMORY	ALE	PSEN	PORT 0	PORT 1	PORT 2	PORT 3
Idle	internal	1	1	port data	port data	port data	port data
Idle	external	1	1	floating	port data	address	port data
Power-down	internal	0	0	port data	port data	port data	port data
Power-down	external	0	0	floating	port data	port data	port data

15.4 Wake-up from Power-down Mode

The Power-down mode of the P83C528 can also be terminated by any one of the two external interrupts, IE0 or IE1. A termination with an external interrupt does not affect the internal data memory and does not affect the Special Function Registers (SFRs). This gives the possibility to exit Power-down without changing the port output levels. To terminate the Power-down mode with an external interrupt, IE0 or IE1 must be switched to be level-sensitive and must be enabled. The external interrupt input signal $\overline{INT0}$ and $\overline{INT1}$ must be kept LOW till the oscillator has restarted and stabilized (see Fig.21).

In order to prevent any interrupt priority problems during wake-up, the priority of the desired wake-up interrupt should be higher than the priorities of all other enabled interrupt sources. The instruction following the one that put the device into the Power-down mode will be the first one which will be executed after an interrupt has been serviced.

Table 29 Internal registers status after a RESET

REGISTER	CONTENTS
ACC	00H
B	00H
DPH, DPL	00H
IE	0000 0000B
IP	X000 0000B
PCH, PCL	00H
PCON	0XXX 0000B
PSW	00H
P0 to P3	FFH
SBUF	Indeterminate
SCON	00H
SP	07H
TCON	00H
TMOD	00H
TH0, TL0	00H
TH1, TL1	00H
T2CON	00H
TH2, TL2	00H
RCAP2H, RCAP2L	00H
S1BIT	X000 0000B
S1INT	0XXX XXXXB
S1SCS	XXX0 0000B
T3	00H
WDCON	A5H

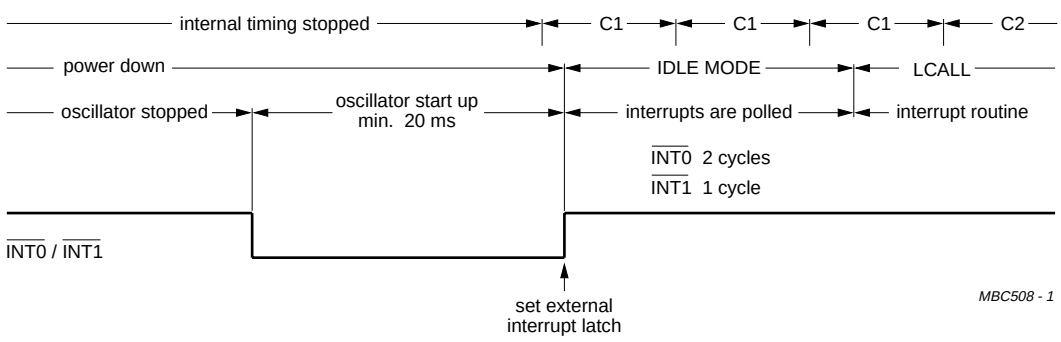

Fig.21 Wake up by external interrupt input.

16 OSCILLATOR CIRCUIT

The oscillator circuit of the P83C528 is a single-stage inverting amplifier in a Pierce oscillator configuration. The circuitry between the XTAL1 and XTAL2 is basically an inverter biased to the transfer point. Either a crystal or ceramic resonator can be used as the feedback element to complete the oscillator circuitry. Both are operated in parallel resonance. XTAL1 is the high gain amplifier input, and XTAL2 is the output (see Fig.22). To drive the P83C528 externally, XTAL1 is driven from an external source and XTAL2 left open-circuit (see Fig.23).

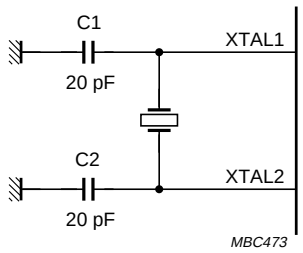

Fig.22 P83C528 oscillator circuit.

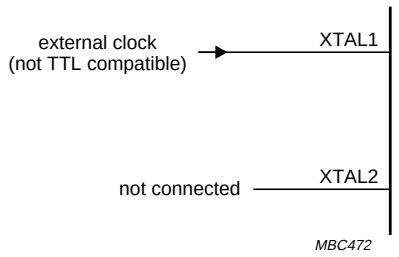

Fig.23 Driving the P83C528 from an external source.

17 RESET CIRCUIT

The reset circuitry for the P83C528 is connected to the reset pin RST. A Schmitt trigger is used at the input for noise rejection. The output of the Schmitt trigger is sampled by the reset circuitry every machine cycle.

A reset is accomplished by holding the RST pin HIGH for at least two machine cycles (24 oscillator periods). The CPU responds by executing an internal reset. During reset ALE and $\overline{PSEN}$ output a HIGH level. In order to perform a correct reset, this level must not be affected by external elements.

With the P83C528, the RST line can also be pulled HIGH internally by a pull-up transistor activated by the WDT T3. The length of the reset pulse from T3 is 16 x 2048 cycles of the on-chip watchdog oscillator. If the WDT is also used to reset external devices, the usual capacitor arrangement should not be connected to RST pin. Instead, an extra circuit should be used to perform the Power-on Reset operation. It should be remembered that a Timer T3 overflow, if enabled, will force a reset condition to the P83C528 by an internal connection, whether the output RST is tied LOW or not (see Fig.24).

The internal reset is executed during the second cycle in which RST is pulled HIGH and is repeated every cycle until RST goes LOW. It leaves the internal registers as shown by Table 29.

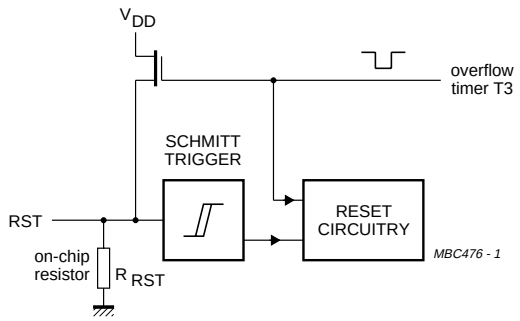

Fig.24 On-chip reset configuration.

17.1 Power-on reset

When V_{DD} is turned on, and provided its rise-time does not exceed 10 ms, an automatic reset can be obtained by connecting the RST pin to V_{DD} via a 2.2 µF capacitor. When the power is switched on, the voltage on the RST pin is equal to V_{DD} minus the capacitor voltage, and decreases from V_{DD} as the capacitor charges through the internal resistor (R_{RST}) to ground. The larger the capacitor, the more slowly V_{RST} decreases. V_{RST} must remain above the lower threshold of the Schmitt trigger long enough to effect a complete reset. The time required is the oscillator start-up time, plus 2 machine cycles, or 16 x 2048 cycles of the on-chip watchdog oscillator if it is running, whichever is longer (see Fig.25).

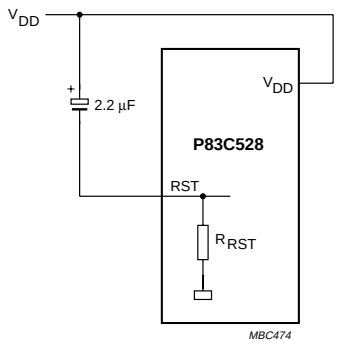

Fig.25 Power-on reset.

18 INSTRUCTION SET

The instruction set consists of 49 single-byte, 46 two-byte and 16 three-byte instructions. When using a 12 MHz oscillator, 64 instructions execute in 1 cycle (1 μs) and 45 instructions execute in 2 cycles (2 μs). Multiply and divide instructions execute in 4 cycles (4 μs).

Table 30 Instruction set description: Arithmetic operations

MNEMONIC		DESCRIPTION	BYTES	CYCLES	OPCODE (HEX)
Arithmetic operations					
ADD	A,Rr	Add register to A	1	1	2*
ADD	A,direct	Add direct byte to A	2	1	25
ADD	A,@Ri	Add indirect RAM to A	1	1	26, 27
ADD	A,#data	Add immediate data to A	2	1	24
ADDC	A,Rr	Add register to A with carry flag	1	1	3*
ADDC	A,direct	Add direct byte to A with carry flag	2	1	35
ADDC	A,@Ri	Add indirect RAM to A with carry flag	1	1	36, 37
ADDC	A,#data	Add immediate data to A with carry flag	2	1	34
SUBB	A,Rr	Subtract register from A with borrow	1	1	9*
SUBB	A,direct	Subtract direct byte from A with borrow	2	1	95
SUBB	A,@Ri	Subtract indirect RAM from A with borrow	1	1	96, 97
SUBB	A,#data	Subtract immediate data from A with borrow	2	1	94
INC	A	Increment A	1	1	04
INC	Rr	Increment register	1	1	0*
INC	direct	Increment direct byte	2	1	05
INC	@Ri	Increment indirect RAM	1	1	06, 07
DEC	A	Decrement A	1	1	14
DEC	Rr	Decrement register	1	1	1*
DEC	direct	Decrement direct byte	2	1	15
DEC	@Ri	Decrement indirect RAM	1	1	16, 17
INC	DPTR	Increment data pointer	1	2	A3
MUL	AB	Multiply A and B	1	4	A4
DIV	AB	Divide A by B	1	4	84
DA	A	Decimal adjust A	1	1	D4

Table 31 Instruction set description: Logic operations

MNEMONIC		DESCRIPTION	BYTES	CYCLES	OPCODE (HEX)
Logic operations					
ANL	A,Rr	AND register to A	1	1	5*
ANL	A,direct	AND direct byte to A	2	1	55
ANL	A,@Ri	AND indirect RAM to A	1	1	56, 57
ANL	A,#data	AND immediate data to A	2	1	54
ANL	direct,A	AND A to direct byte	2	1	52
ANL	direct,#data	AND immediate data to direct byte	3	2	53
ORL	A,Rr	OR register to A	1	1	4*
ORL	A,direct	OR direct byte to A	2	1	45
ORL	A,@Ri	OR indirect RAM to A	1	1	46, 47
ORL	A,#data	OR immediate data to A	2	1	44
ORL	direct,A	OR A to direct byte	2	1	42
ORL	direct,#data	OR immediate data to direct byte	3	2	43
XRL	A,Rr	Exclusive-OR register to A	1	1	6*
XRL	A,direct	Exclusive-OR direct byte to A	2	1	65
XRL	A,@Ri	Exclusive-OR indirect RAM to A	1	1	66, 67
XRL	A,#data	Exclusive-OR immediate data to A	2	1	64
XRL	direct,A	Exclusive-OR A to direct byte	2	1	62
XRL	direct,#data	Exclusive-OR immediate data to direct byte	3	2	63
CLR	A	Clear A	1	1	E4
CPL	A	Complement A	1	1	F4
RL	A	Rotate A left	1	1	23
RLC	A	Rotate A left through the carry flag	1	1	33
RR	A	Rotate A right	1	1	03
RRC	A	Rotate A right through the carry flag	1	1	13
SWAP	A	Swap nibbles within A	1	1	C4

Table 32 Instruction set description: Data transfer

MNEMONIC		DESCRIPTION	BYTES	CYCLES	OPCODE (HEX)
Data transfer					
MOV	A,Rr	Move register to A	1	1	E*
MOV	A,direct (note 1)	Move direct byte to A	2	1	E5
MOV	A,@Ri	Move indirect RAM to A	1	1	E6, E7
MOV	A,#data	Move immediate data to A	2	1	74
MOV	Rr,A	Move A to register	1	1	F*
MOV	Rr,direct	Move direct byte to register	2	2	A*
MOV	Rr,#data	Move immediate data to register	2	1	7*
MOV	direct,A	Move A to direct byte	2	1	F5
MOV	direct,Rr	Move register to direct byte	2	2	8*
MOV	direct,direct	Move direct byte to direct	3	2	85
MOV	direct,@Ri	Move indirect RAM to direct byte	2	2	86, 87
MOV	direct,#data	Move immediate data to direct byte	3	2	75
MOV	@RI,A	Move A to indirect RAM	1	1	F6, F7
MOV	@Ri,direct	Move direct byte to indirect RAM	2	2	A6, A7
MOV	@Ri,#data	Move immediate data to indirect RAM	2	1	76, 77
MOV	DPTR,#data 16	Load data pointer with a 16-bit constant	3	2	90
MOVC	A,@A+DPTR	Move code byte relative to DPTR to A	1	2	93
MOVC	A,@A+PC	Move code byte relative to PC to A	1	2	83
MOVX	A,@Ri	Move external RAM (8-bit address) to A	1	2	E2, E3
MOVX	A,@DPTR	Move external RAM (16-bit address) to A	1	2	E0
MOVX	@Ri,A	Move A to external RAM (8-bit address)	1	2	F2, F3
MOVX	@DPTR,A	Move A to external RAM (16-bit address)	1	2	F0
PUSH	direct	Push direct byte onto stack	2	2	C0
POP	direct	Pop direct byte from stack	2	2	D0
XCH	A,Rr	Exchange register with A	1	1	C*
XCH	A,direct	Exchange direct byte with A	2	1	C5
XCH	A,@Ri	Exchange indirect RAM with A	1	1	C6, C7
XCHD	A,@Ri	Exchange LOW-order digit indirect RAM with A	1	1	D6, D7

Note

1. MOV A,ACC is not permitted.

Table 33 Instruction set description: Boolean variable manipulation, Program and machine control

MNEMONIC		DESCRIPTION	BYTES	CYCLES	OPCODE (HEX)
Boolean variable manipulation					
CLR	C	Clear carry flag	1	1	C3
CLR	bit	Clear direct bit	2	1	C2
SETB	C	Set carry flag	1	1	D3
SETB	bit	Set direct bit	2	1	D2
CPL	C	Complement carry flag	1	1	B3
CPL	bit	Complement direct bit	2	1	B2
ANL	C,bit	AND direct bit to carry flag	2	2	82
ANL	C,/bit	AND complement of direct bit to carry flag	2	2	B0
ORL	C,bit	OR direct bit to carry flag	2	2	72
ORL	C,/bit	OR complement of direct bit to carry flag	2	2	A0
MOV	C,bit	Move direct bit to carry flag	2	1	A2
MOV	bit,C	Move carry flag to direct bit	2	2	92
Program and machine control					
ACALL	addr11	Absolute subroutine call	2	2	•1addr
LCALL	addr16	Long subroutine call	3	2	12
RET		Return from subroutine	1	2	22
RETI		Return from interrupt	1	2	32
AJMP	addr11	Absolute jump	2	2	♦1addr
LJMP	addr16	Long jump	3	2	02
SJMP	rel	Short jump (relative address)	2	2	80
JMP	@A+DPTR	Jump indirect relative to the DPTR	1	2	73
JZ	rel	Jump if A is zero	2	2	60
JNZ	rel	Jump if A is not zero	2	2	70
JC	rel	Jump if carry flag is set	2	2	40
JNC	rel	Jump if carry flag is not set	2	2	50
JB	bit,rel	Jump if direct bit is set	3	2	20
JNB	bit,rel	Jump if direct bit is not set	3	2	30
JBC	bit,rel	Jump if direct bit is set and clear bit	3	2	10
CJNE	A,direct,rel	Compare direct to A and jump if not equal	3	2	B5
CJNE	A,#data,rel	Compare immediate to A and jump if not equal	3	2	B4
CJNE	Rr,#data,rel	Compare immediate to register and jump if not equal	3	2	B*
CJNE	@Ri,#data,rel	Compare immediate to indirect and jump if not equal	3	2	B6, B7
DJNZ	Rr,rel	Decrement register and jump if not zero	2	2	D*
DJNZ	direct,rel	Decrement direct and jump if not zero	3	2	D5
NOP		No operation	1	1	00

Table 34 Description of the mnemonics in the Instruction set

MNEMONIC	DESCRIPTION
Data addressing modes	
Rr	working register R0-R7.
direct	128 internal RAM locations and any special function register (SFR).
@Ri	indirect internal RAM location addressed by register R0 or R1 of the actual register bank.
#data	8-bit constant included in instruction.
#data 16	16-bit constant included as bytes 2 and 3 of instruction.
bit	direct addressed bit in internal RAM or SFR.
addr16	16-bit destination address. Used by LCALL and LJMP. The branch will be anywhere within the 64 kbytes program memory address space.
addr11	11-bit destination address. Used by ACALL and AJMP. The branch will be within the same 2 kbytes page of program memory as the first byte of the following instruction.
rel	Signed (two's complement) 8-bit offset byte. Used by SJMP and all conditional jumps. Range is –128 to +127 bytes relative to first byte of the following instruction.
Hexadecimal opcode cross-reference	
*	8, 9, A, B, C, D, E, F.
•	11, 31, 51, 71, 91, B1, D1, F1.
♦	01, 21, 41, 61, 81, A1, C1, E1.

Table 35 Instruction map

First hexadecimal character of opcode ↓ | **← Second hexadecimal character of opcode →**

↓	0	1	2	3	4	5	6	7	8	9	A	B	C	D	E	F
0	NOP	AJMP addr11	LJMP addr16	RR A	INC A	INC direct	INC @Ri 0	INC @Ri 1	INC Rr 0	INC Rr 1	INC Rr 2	INC Rr 3	INC Rr 4	INC Rr 5	INC Rr 6	INC Rr 7
1	JBC bit,rel	ACALL addr11	LCALL addr16	RRC A	DEC A	DEC direct	DEC @Ri 0	DEC @Ri 1	DEC Rr 0	DEC Rr 1	DEC Rr 2	DEC Rr 3	DEC Rr 4	DEC Rr 5	DEC Rr 6	DEC Rr 7
2	JB bit,rel	AJMP addr11	RET	RL A	ADD A,#data	ADD A,direct	ADD A,@Ri 0	ADD A,@Ri 1	ADD A,Rr 0	ADD A,Rr 1	ADD A,Rr 2	ADD A,Rr 3	ADD A,Rr 4	ADD A,Rr 5	ADD A,Rr 6	ADD A,Rr 7
3	JNB bit,rel	ACALL addr11	RETI	RLC A	ADDC A,#data	ADDC A,direct	ADDC A,@Ri 0	ADDC A,@Ri 1	ADDC A,Rr 0	ADDC A,Rr 1	ADDC A,Rr 2	ADDC A,Rr 3	ADDC A,Rr 4	ADDC A,Rr 5	ADDC A,Rr 6	ADDC A,Rr 7
4	JC rel	AJMP addr11	ORL direct,A	ORL direct,#data	ORL A,#data	ORL A,direct	ORL A,@Ri 0	ORL A,@Ri 1	ORL A,Rr 0	ORL A,Rr 1	ORL A,Rr 2	ORL A,Rr 3	ORL A,Rr 4	ORL A,Rr 5	ORL A,Rr 6	ORL A,Rr 7
5	JNC rel	ACALL addr11	ANL direct,A	ANL direct,#data	ANL A,#data	ANL A,direct	ANL A,@Ri 0	ANL A,@Ri 1	ANL A,Rr 0	ANL A,Rr 1	ANL A,Rr 2	ANL A,Rr 3	ANL A,Rr 4	ANL A,Rr 5	ANL A,Rr 6	ANL A,Rr 7
6	JZ rel	AJMP addr11	XRL direct,A	XRL direct,#data	XRL A,#data	XRL A,direct	XRL A,@Ri 0	XRL A,@Ri 1	XRL A,Rr 0	XRL A,Rr 1	XRL A,Rr 2	XRL A,Rr 3	XRL A,Rr 4	XRL A,Rr 5	XRL A,Rr 6	XRL A,Rr 7
7	JNZ rel	ACALL addr11	ORL C,bit	JMP @A+DPTR	MOV A,#data	MOV direct,#data	MOV @Ri,#data 0	MOV @Ri,#data 1	MOV Rr,#data 0	MOV Rr,#data 1	MOV Rr,#data 2	MOV Rr,#data 3	MOV Rr,#data 4	MOV Rr,#data 5	MOV Rr,#data 6	MOV Rr,#data 7
8	SJMP rel	AJMP addr11	ANL C,bit	MOVC A,@A+PC	DIV AB	MOV direct,direct	MOV direct,@Ri 0	MOV direct,@Ri 1	MOV direct,Rr 0	MOV direct,Rr 1	MOV direct,Rr 2	MOV direct,Rr 3	MOV direct,Rr 4	MOV direct,Rr 5	MOV direct,Rr 6	MOV direct,Rr 7
9	MOV DTPR,#data16	ACALL addr11	MOV bit,C	MOVC A,@A+DPTR	SUBB A,#data	SUBB A,direct	SUBB A,@Ri 0	SUBB A,@Ri 1	SUB A,Rr 0	SUB A,Rr 1	SUB A,Rr 2	SUB A,Rr 3	SUB A,Rr 4	SUB A,Rr 5	SUB A,Rr 6	SUB A,Rr 7
A	ORL C,/bit	AJMP addr11	MOV bit,C	INC DPTR	MUL AB		MOV @Ri,direct 0	MOV @Ri,direct 1	MOV Rr,direct 0	MOV Rr,direct 1	MOV Rr,direct 2	MOV Rr,direct 3	MOV Rr,direct 4	MOV Rr,direct 5	MOV Rr,direct 6	MOV Rr,direct 7
B	ANL C,/bit	ACALL addr11	CPL bit	CPL C	CJNE A,#data,rel	CJNE A,direct,rel	CJNE @Ri,#data,rel 0	CJNE @Ri,#data,rel 1	CJNE Rr,#data,rel 0	CJNE Rr,#data,rel 1	CJNE Rr,#data,rel 2	CJNE Rr,#data,rel 3	CJNE Rr,#data,rel 4	CJNE Rr,#data,rel 5	CJNE Rr,#data,rel 6	CJNE Rr,#data,rel 7
C	PUSH direct	AJMP addr11	CLR bit	CLR C	SWAP A	XCH A,direct	XCH A,@Ri 0	XCH A,@Ri 1	XCH A,Rr 0	XCH A,Rr 1	XCH A,Rr 2	XCH A,Rr 3	XCH A,Rr 4	XCH A,Rr 5	XCH A,Rr 6	XCH A,Rr 7
D	POP direct	ACALL addr11	SETB bit	SETB C	DA A	DJNZ direct,rel	XCHD A,@Ri 0	XCHD A,@Ri 1	DJNZ Rr,rel 0	DJNZ Rr,rel 1	DJNZ Rr,rel 2	DJNZ Rr,rel 3	DJNZ Rr,rel 4	DJNZ Rr,rel 5	DJNZ Rr,rel 6	DJNZ Rr,rel 7
E	MOVX A,@DTPR	AJMP addr11	MOVX A,@Ri 0	MOVX A,@Ri 1	CLR A	MOV A,direct [1]	MOV A,@Ri 0	MOV A,@Ri 1	MOV A,Rr 0	MOV A,Rr 1	MOV A,Rr 2	MOV A,Rr 3	MOV A,Rr 4	MOV A,Rr 5	MOV A,Rr 6	MOV A,Rr 7
F	MOVX @DTPR,A	ACALL addr11	MOVX @Ri,A 0	MOVX @Ri,A 1	CPL A	MOV direct,A	MOV @Ri,A 0	MOV @Ri,A 1	MOV Rr,A 0	MOV Rr,A 1	MOV Rr,A 2	MOV Rr,A 3	MOV Rr,A 4	MOV Rr,A 5	MOV Rr,A 6	MOV Rr,A 7

Note

1. MOV A, ACC is not a valid instruction.

19 LIMITING VALUES

In accordance with the Absolute Maximum System (IEC 134)

SYMBOL	PARAMETER	MIN.	MAX.	UNIT
V_{DD}	supply voltage range	–0.5	+6.0	V
V_I	all input voltages	–0.5	V_{DD} +0.5	V
P_{tot}	total power dissipation	–	1	W
T_{stg}	storage temperature range	–65	+150	°C
T_{amb}	operating ambient temperature range:			
	version xBx	0	+70	°C
	version xFx	–40	+85	°C

20 DC CHARACTERISTICS

V_{DD} = 5 V ± 10%; V_{SS} = 0 V; T_{amb} = 0 to +70°C; –40 to +85°C. All voltages with respect to V_{SS} unless otherwise specified.

SYMBOL	PARAMETER	CONDITIONS	MIN.	MAX.	UNIT
Supply					
V_{DD}	supply voltage range		4.5	5.5	V
I_{DD}	supply current operating modes, note 1	V_{DDmax}, 16 MHz V_{DDmax}, 24 MHz	–	33 43	mA mA
I_{ID}	supply current Idle mode, note 2	V_{DDmax}, 16 MHz V_{DDmax}, 24MHz	–	6 7.5	mA mA
I_{PD}	supply current Power–down mode	2 V ≤ V_{DD} ≤ V_{DDmax}; note 3	–	100	µA
Inputs					
V_{IL}	LOW level input voltage (except $\overline{EA}$, P1.6, P1.7)		–0.5	0.2 V_{DD}–0.1	V
V_{IL1}	LOW level input voltage $\overline{EA}$		–0.5	0.2 V_{DD}–0.3	V
V_{IL2}	LOW level input voltage P1.6, P1.7	note 6	–0.5	0.3 V_{DD}	V
V_{IH}	HIGH level input voltage (except RST, XTAL1, P1.6, P1.7)		0.2 V_{DD} +0.9	V_{DD} +0.5	V
V_{IH1}	HIGH level input voltage RST, XTAL1		0.7 V_{DD}	V_{DD} +0.5	V
V_{IH2}	HIGH level input voltage P1.6, P1.7	note 6	0.7 V_{DD}	5.5	V
I_{IL}	LOW level input current Ports 1, 2 and 3 (except P1.6 and P1.7)	V_I = 0.45 V	–	–50	µA
I_{TL}	input current HIGH-to-LOW transition Ports 1, 2 and 3 (except P1.6 and P1.7)	V_I = 2.0 V	–	–650	µA
I_{LI1}	input leakage current Port 0, $\overline{EA}$	0.45 < V_I < V_{DD}	–	±10	µA
I_{LI2}	input leakage current P1.6 and P1.7	0 V < V_I < 5.5 V 0 V < V_{DD} < 5.5 V	–	±10	µA
Outputs					
V_{OL}	LOW level output voltage Ports 1, 2 and 3 (except P1.6 and P1.7)	I_{OL} = 1.6 mA; notes 6 and 7	–	0.45	V
V_{OL1}	LOW level output voltage Port 0, ALE, $\overline{PSEN}$	I_{OL} = 3.2 mA; notes 4 and 7	–	0.45	V
V_{OL2}	LOW level output voltage P1.6 and P1.7	I_{OL} = 3.0 mA; note 7	–	0.40	V
V_{OH}	HIGH level output voltage Ports 1, 2 and 3 (except P1.6 and P1.7)	I_{OH} = –60 µA; V_{DD} = 5 V ±10% I_{OH} = –25 µA I_{OH} = –10 µA	2.4 0.75 V_{DD} 0.9 V_{DD}	– – –	V

SYMBOL	PARAMETER	CONDITIONS	MIN.	MAX.	UNIT
V_{OH1}	HIGH level output voltage Port0in in external bus mode, ALE, $\overline{PSEN}$, RST	I_{OH} = –800 μA; V_{DD} = 5 V± 10% I_{OH} = –300 μA; I_{OH} = –80 μA; note 5	2.4 $0.75V_{DD}$ $0.9V_{DD}$	– – –	V
R_{RST}	RST pull–down resistor		50	150	kΩ
$C_{I/O}$	I/O pin capacitance	test frequency = 1 MHz; T_{amb} = 25 °C	–	10	pF

Notes to the DC characteristics

1. Conditions for:
   a) The operating supply current is measured with all output pins disconnected; XTAL1 driven with $t_r = t_f$ = 5 ns; $V_{IL} = V_{SS}$ +0.5 V; $V_{IH} = V_{DD}$ –0.5 V; XTAL2 not connected; $\overline{EA}$ = RST = Port 0 = P1.6 = P1.7 = V_{DD}; the WDT is disabled (by the external RESET).
2. Conditions for:
   a) The Idle mode supply current is measured with all output pins disconnected; XTAL1 driven with $t_r = t_f$ = 5 ns; $V_{IL} = V_{SS}$ +0.5 V; $V_{IH} = V_{DD}$ –0.5 V; XTAL2 not connected; the WDT is disabled; $\overline{EA}$ = RST = V_{SS}; Port 0 = P1.6 = P1.7 = V_{DD}.
3. Conditions for:
   a) The Power-down current is measured with all output pins disconnected; XTAL2 not connected; WDT is disabled; $\overline{EA}$ = RST = XTAL1 = V_{SS}; Port 0 = P1.6 = P1.7 = V_{DD}.
4. Capacitive loading on Port 0 and Port 2 may cause spurious noise pulses to be superimposed on the LOW level output voltage of ALE, Port 1 and Port 3. The noise is due to external bus capacitance discharging into the Port 0 and Port 2 pins when these pins make a HIGH-to-LOW transition during bus operations. In the worst cases (capacitive loading > 100pF), the noise pulse on the ALE line may exceed 0.8 V. In such cases it may be desirable to qualify ALE with a Schmitt Trigger, or use an address latch with a Schmitt Trigger STROBE input.
5. Capacitive loading on Port 0 and Port 2 may cause the HIGH level output voltage on ALE and $\overline{PSEN}$ to momentarily fall below the 0.9 V_{DD} specification when the address bits are stabilizing.
6. The input threshold voltage of P1.6 and P1.7 (SIO1) meets the I^2C specification, so a voltage below 0.3 V_{DD} will be recognized as a logic 0 while an input above 0.7 V_{DD} will be recognized as a logic 1.
7. Under steady state (non-transient) conditions, I_{OL} must be externally limited as follows:
   a) Maximum I_{OL} per port pin:10 mA.
   b) Maximum I_{OL} per 8-bit port:- Port 0: 26 mA; Ports 1, 2 and 3: 15 mA.
   c) Maximum total I_{OL} for all output pins: 71 mA. If I_{OL} exceeds the test condition, V_{OL} may exceed the related specification.
   d) Pins are not guaranteed to sink current greater than the listed test conditions.
8. I_{DD} max. at other frequencies can be derived from Fig.26 where f is the external oscillator frequency in MHz; I_{DD} max. is given in mA.

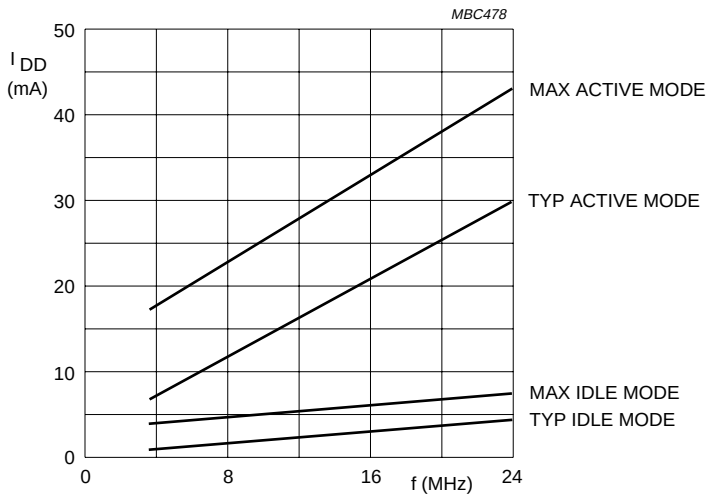

Valid only within frequency specifications of device under test.

Fig.26 I_{DD} as a function of frequency.

21 AC CHARACTERISTICS

21.1 AC Characteristics 16 MHz version

See notes 1, 2 and 3 in Section 21.2; Cl = 100 pF for Port 0, ALE and $\overline{PSEN}$; C_L = 80 pF for all other outputs unless otherwise specified.

SYMBOL	PARAMETER	16 MHZ		VARIABLE CLOCK		UNIT
		MIN.	MAX.	MIN.	MAX.	
External program memory						
t_{LHLL}	ALE pulse duration	85	–	2 t_{CK}–40	–	ns
t_{AVLL}	address set-up time to ALE	8	–	t_{CK}–55	–	ns
t_{LLAX}	address hold time after ALE	28	–	t_{CK}–35	–	ns
t_{LLIV}	time from ALE to valid instruction input	–	150	–	4 t_{CK}–100	ns
t_{LLPL}	time from ALE to control pulse $\overline{PSEN}$	23	–	t_{CK}–40	–	ns
t_{PLPH}	control pulse duration $\overline{PSEN}$	143	–	3 t_{CK}–45	–	ns
t_{PLIV}	time from $\overline{PSEN}$ to valid instruction input	–	83	–	3 t_{CK}–105	ns
t_{PXIX}	input instruction hold time after $\overline{PSEN}$	0	–	0	–	ns
t_{PXIZ}	input instruction float delay after $\overline{PSEN}$	–	38	–	t_{CK}–25	ns
t_{AVIV}	address to valid instruction input	–	208	–	5 t_{CK}–105	ns
t_{PLAZ}	address float time to $\overline{PSEN}$	–	10	–	10	ns
External data memory						
t_{LHLL}	ALE pulse duration	85	–	2 t_{CK}–40	–	ns
t_{AVLL}	address set-up time to ALE	8	–	t_{CK}–55	–	ns
t_{LLAX}	address hold time after ALE	28	–	t_{CK}–35	–	ns
t_{RLRH}	$\overline{RD}$ pulse duration	275	–	6 t_{CK}–100	–	ns
t_{WLWH}	$\overline{WR}$ pulse duration	275	–	6 t_{CK}–100	–	ns
t_{RLDV}	$\overline{RD}$ to valid data input	–	148	–	5 t_{CK}–165	ns
t_{RHDX}	data hold time after $\overline{RD}$	0	–	0	–	ns
t_{RHDZ}	data float delay after $\overline{RD}$	–	55	–	2 t_{CK}–70	ns
t_{LLDZ}	time from ALE to valid data input	–	350	–	8 t_{CK}–150	ns
t_{AVDV}	address to valid data input	–	398	–	9 t_{CK}–165	ns
t_{LLWL}	time from ALE to $\overline{RD}$ or $\overline{WR}$	138	238	3 t_{CK}–50	3 t_{CK}+50	ns
t_{AVWL}	time from address to $\overline{RD}$ or $\overline{WR}$	120	–	4 t_{CK}–130	–	ns
t_{WHLH}	time from $\overline{RD}$ or $\overline{WR}$ HIGH to ALE HIGH	23	103	t_{CK}–40	t_{CK}+ 40	ns
t_{QVWX}	data valid to $\overline{WR}$ transition	3	–	t_{CK}–60	–	ns
t_{QVWH}	data set-up time before $\overline{WR}$	288	–	7 t_{CK}–150	–	ns
t_{WHQX}	data hold time after $\overline{WR}$	13	–	t_{CK}–50	–	ns
t_{RLAZ}	address float delay after $\overline{RD}$	–	0	–	0	ns

21.2 AC Characteristics 24 MHz version

See notes 1, 2 and 3.; Cl = 100 pF for Port 0, ALE and $\overline{PSEN}$; C_L = 80 pF for all other outputs unless otherwise specified.

SYMBOL	PARAMETER	24 MHZ		VARIABLE CLOCK		UNIT
		MIN.	MAX.	MIN.	MAX.	
External program memory						
t_{LHLL}	ALE pulse duration	43	–	2 t_{CK}–40	–	ns
t_{AVLL}	address set-up time to ALE	17	–	t_{CK}–25	–	ns
t_{LLAX}	address hold time after ALE	17	–	t_{CK}–25	–	ns
t_{LLIV}	time from ALE to valid instruction input	–	102	–	4 t_{CK}–65	ns
t_{LLPL}	time from ALE to control pulse $\overline{PSEN}$	17	–	t_{CK}–25	–	ns
t_{PLPH}	control pulse duration $\overline{PSEN}$	80	–	3 t_{CK}–45	–	ns
t_{PLIV}	time from $\overline{PSEN}$ to valid instruction input	–	65	–	3 t_{CK}–60	ns
t_{PXIX}	input instruction hold time after $\overline{PSEN}$	0	–	0	–	ns
t_{PXIZ}	input instruction float delay after $\overline{PSEN}$	–	17	–	t_{CK}–25	ns
t_{AVIV}	address to valid instruction input	–	128	–	5 t_{CK}–80	ns
t_{PLAZ}	address float time to $\overline{PSEN}$	–	10	–	10	ns
External data memory						
t_{LHLL}	ALE pulse duration	43	–	2 t_{CK}–40	–	ns
t_{AVLL}	address set-up time to ALE	17	–	t_{CK}–25	–	ns
t_{LLAX}	address hold time after ALE	17	–	t_{CK}–25	–	ns
t_{RLRH}	$\overline{RD}$ pulse duration	150	–	6 t_{CK}–100	–	ns
t_{WLWH}	$\overline{WR}$ pulse duration	150	–	6 t_{CK}–100	–	ns
t_{RLDV}	$\overline{RD}$ to valid data input	–	118	–	5 t_{CK}–90	ns
t_{RHDX}	data hold time after $\overline{RD}$	0	–	0	–	ns
t_{RHDZ}	data float delay after $\overline{RD}$	–	55	–	2 t_{CK}–28	ns
t_{LLDZ}	time from ALE to valid data input	–	183	–	8 t_{CK}–150	ns
t_{AVDV}	address to valid data input	–	210	–	9 t_{CK}–165	ns
t_{LLWL}	time from ALE to $\overline{RD}$ or $\overline{WR}$	75	175	3 t_{CK}–50	3 t_{CK}+50	ns
t_{AVWL}	time from address to $\overline{RD}$ or $\overline{WR}$	92	–	4 t_{CK}–75	–	ns
t_{WHLH}	time from $\overline{RD}$ or $\overline{WR}$ HIGH to ALE HIGH	17	67	t_{CK}–25	t_{CK}+ 25	ns
t_{QVWX}	data valid to $\overline{WR}$ transition	12	–	t_{CK}–30	–	ns
t_{QVWH}	data set-up time before $\overline{WR}$	162	–	7 t_{CK}–130	–	ns
t_{WHQX}	data hold time after $\overline{WR}$	17	–	t_{CK}–25	–	ns
t_{RLAZ}	address float delay after $\overline{RD}$	–	0	–	0	ns

Notes to the AC Characteristics 16 and 24 MHz versions

1. For the AC Characteristics the following conditions are valid:
   a) **P83C52x EBx**: V_{DD} = 5 V ±10%; V_{SS} = 0 V; T_{amb} = 0 to +70 °C; t_{CK} min. = 63 ns
   b) **P83C52x EFx:** V_{DD} = 5 V ±10%; V_{SS} = 0 V; T_{amb} = –40 to +85 °C; t_{CK} min. = 63 ns.
2. t_{CK} min. = 1/f max. (maximum operating frequency); t_{CK} = clock period (see section for timing symbol definitions).
3. The maximum operating frequency is limited to 16/24 MHz and the minimum to 3.5 MHz (all versions Ixx/Exx).

22 I²C CHARACTERISTICS (BIT-LEVEL)

SYMBOL	PARAMETER	INPUT	OUTPUT	I²C SPEC	UNIT
SCL timing					
$t_{HD;STA}$	START condition hold time	≥ 14 t_{CK}; note 1	note 2	≥ 4.0	µs
t_{LOW}	SCL LOW time	≥ 16 t_{CK}	note 2	≥ 4.7	µs
t_{HIGH}	SCL HIGH time	≥ 14 t_{CK}; note 1	≥ 80 t_{CK}; note 3	≥ 4.0	µs
t_{RC}	SCL RISE time	≤ 1; note 4	note 5	≤ 1.0	µs
t_{FC}	SCL FALL time	≤ 0.3; note 4	≤ 0.3; note 6	≤ 0.3	µs
SDA timing					
$t_{SU;DAT}$	data set-up time	≥ 250 ns	note 2	≥ 250	ns
$t_{HD;DAT}$	data hold time	≥ 0 ns	note 2	≥ 0	ns
$t_{SU;STA}$	repeated START set-up time	≥ 14 t_{CK}; note 1	note 2	≥ 4.7	µs
$t_{SU;STO}$	STOP condition set–up time	≥ 14 t_{CK}; note 1	note 2	≥ 4.0	µs
t_{BUF}	bus free time	≥ 14 t_{CK}; note 1	note 2	≥ 4.7	µs
t_{RD}	SDA RISE time	≤ 1; note 4	note 5	≤ 1.0	µs
t_{FD}	SDA FALL time	≤ 300 ns; note 4	≤ 0.3; note 6	≤ 0.3	µs

Notes

1. At f_{CLK} = 3.5 MHz, this evaluates to 14 × 286 ns = 4 µs, i.e. the bit-level I²C interface can respond to the I²C protocol for f_{CLK} ≥3.5 MHz.
2. This parameter is determined by the user software, it has to comply with the I²C specification.
3. This value gives the auto-clock pulse length which meets the I²C specification for the specified XTAL1 clock frequency range. Alternatively, the SCL pulse may be timed by software.
4. Spikes on SDA and SCL lines with a duration of less than 4 × f_{CLK} will be filtered out.
5. The RISE time is determined by the external bus line capacitance and pull-up resistor, it must be ≤1 µs.
6. The maximum capacitance on bus lines SDA and SCL is 400 pF.

23 XTAL1 CHARACTERISTICS

Oscillator circuitry: crystal capacitors: C1 = C2 = 20 pF (see Fig.31).

Table 36 External clock drive XTAL

SYMBOL	PARAMETER	VARIABLE CLOCK		UNIT
		MIN.	MAX.	
f_{CLK}	clock frequency	3.5	24	MHz
t_{CK}	clock period	42	286	ns
t_{HIGH}	HIGH time	17	$t_{CK} - t_{LOW}$	ns
t_{LOW}	LOW time	17	$t_{CK} - t_{HIGH}$	ns
t_r	RISE time	–	5	ns
t_f	FALL time	–	5	ns
t_{CY}	cycle time ($t_{CY} = 12\ t_{CK}$)	0.5	3.43	µs

24 SERIAL PORT CHARACTERISTICS

See Table 37 and Fig.32.

Table 37 Serial Port Timing: Shift Register Mode

V_{DD} = 5 V ±10%; V_{SS} = 0 V; T_{amb} = 0 °C to 70 °C; Load Capacitance = 80 pF

SYMBOL	PARAMETER	24 MHZ OSCILLATOR		VARIABLE OSCILLATOR		UNIT
		MIN.	MAX.	MIN.	MAX.	
t_{XLXL}	Serial Port clock cycle time	0.5	–	12 t_{CK}	–	µs
t_{QVXH}	output data setup to clock rising edge	283	–	10 t_{CK}–133	–	ns
t_{XHQX}	output data hold after clock rising edge	23	–	2 t_{CK}–60	–	ns
t_{XHDX}	input data hold after clock rising edge	0	–	0	–	ns
t_{XHDV}	clock rising edge to input data valid	–	283	–	10 t_{CK}–133	ns

25 TIMING DIAGRAMS

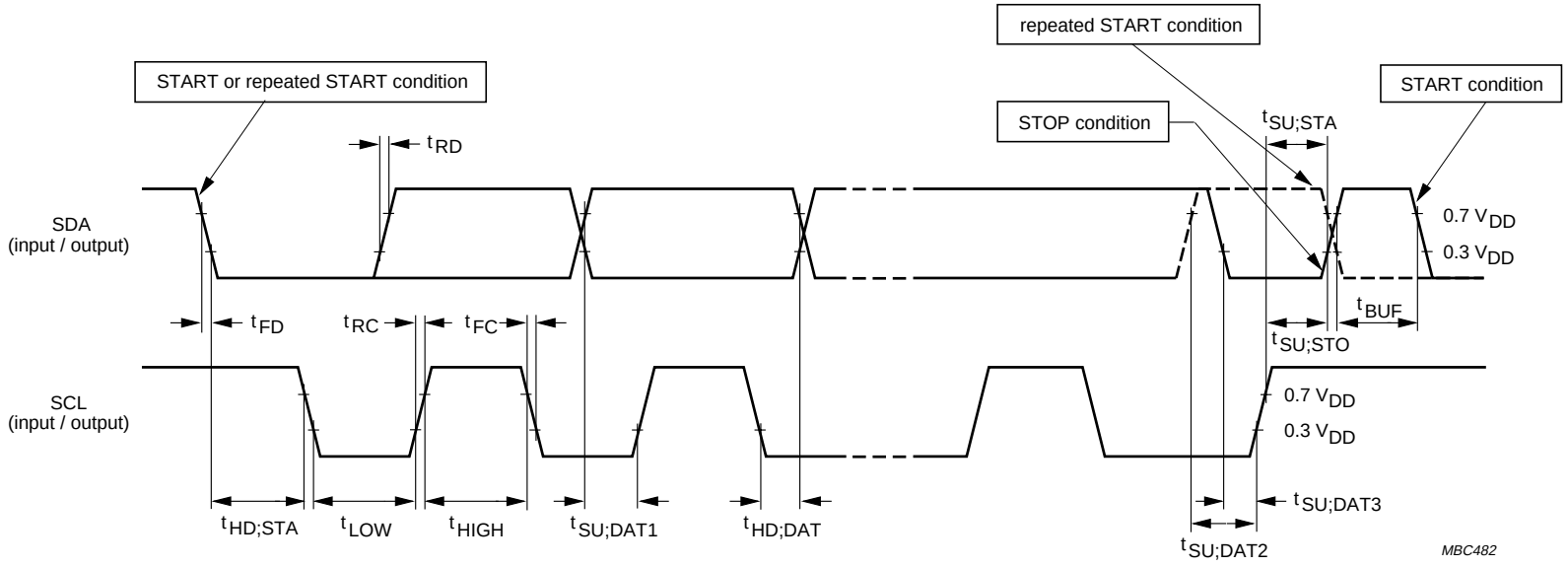

Fig.27 I^2C interface timing.

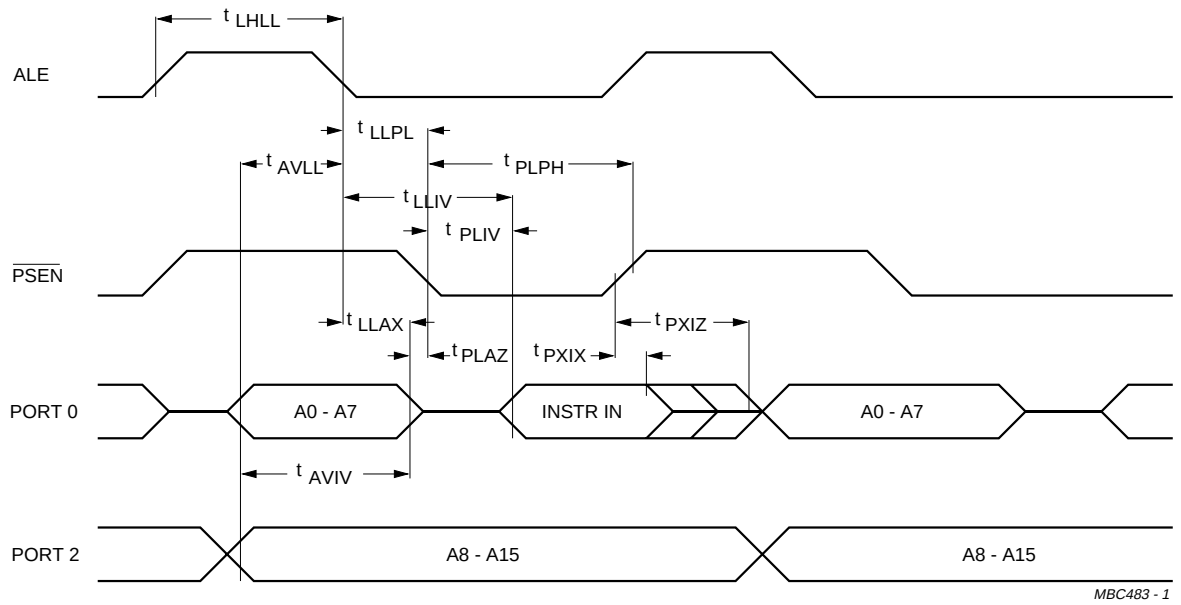

Fig.28 External program memory read cycle.

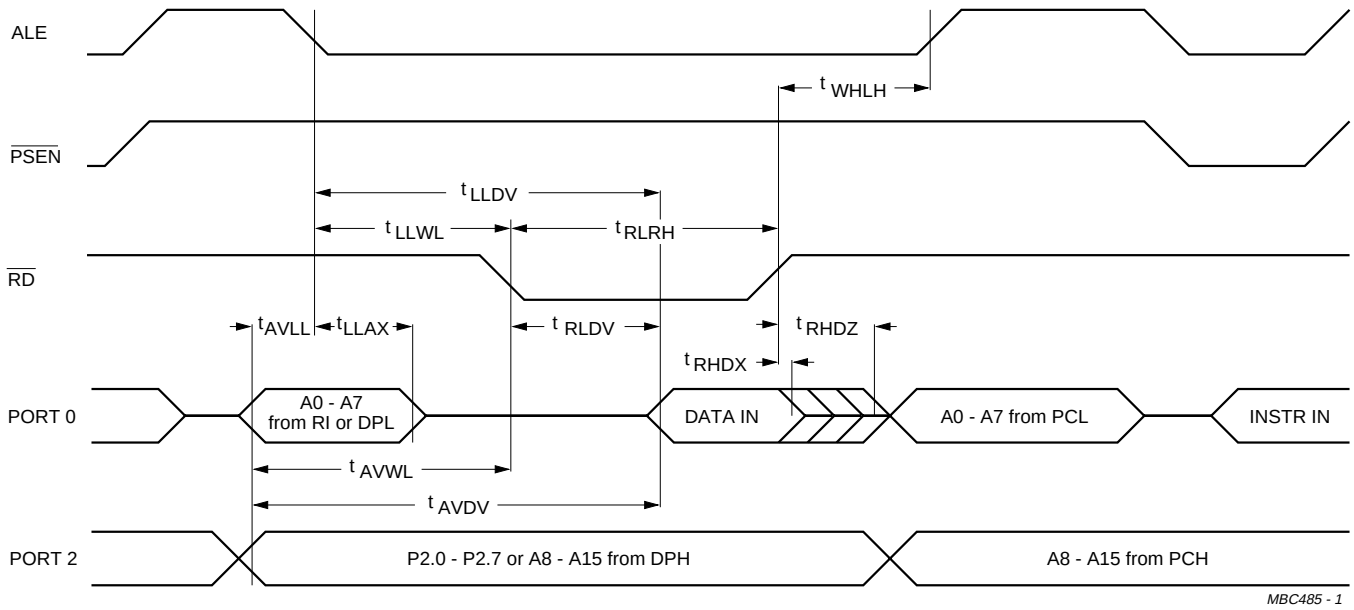

Fig.29 External data memory read cycle.

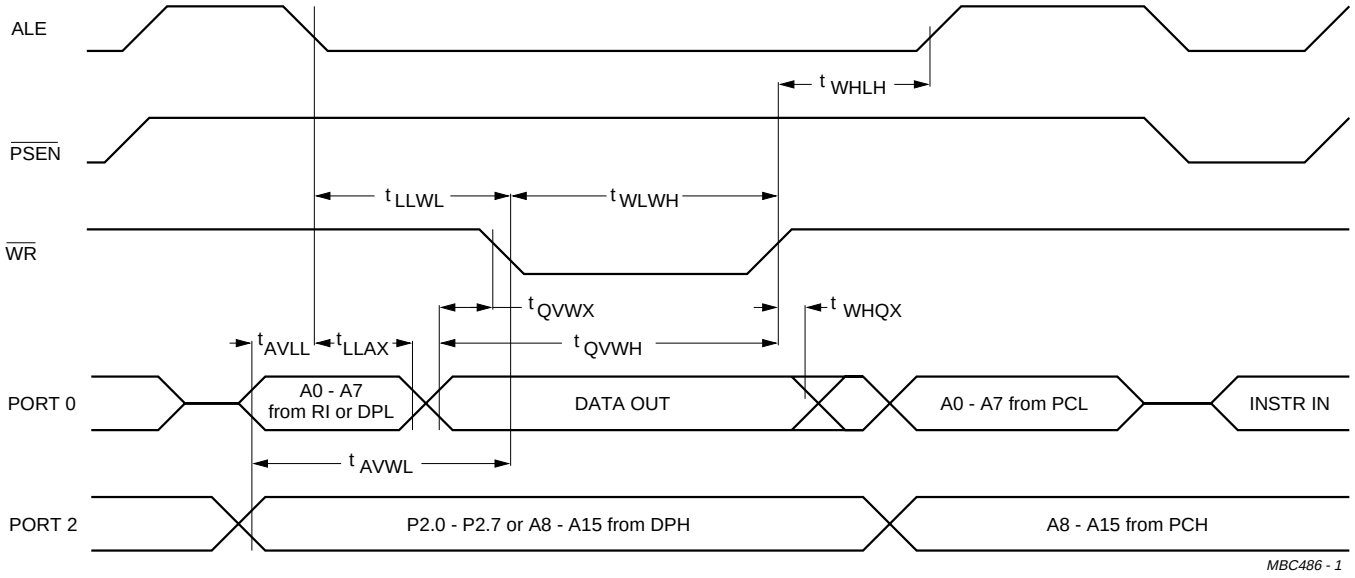

Fig.30 External data memory write cycle.

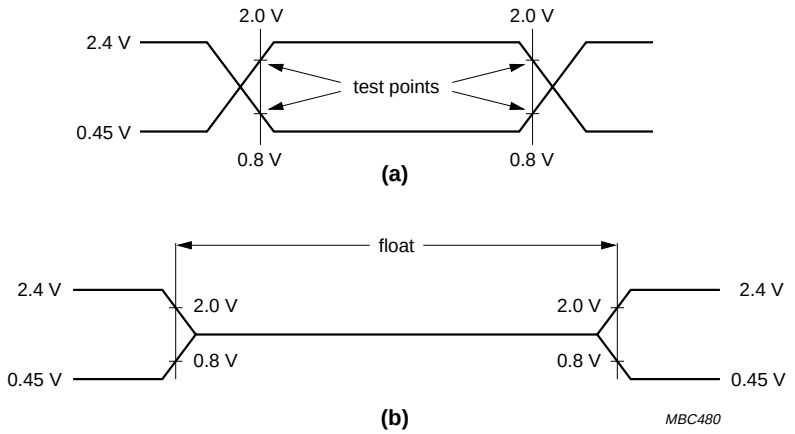

AC testing inputs are driven at 2.4 V for a logic 1 and 0.45 V for a logic 0. Timing measurements are taken at 2.0 V for a logic 1 and 0.8 V for logic 0 see (a). The float state is defined as the point at which a Port 0 pin sinks 3.2 mA or sources 400 μA at the voltage test levels see (b).

Fig.31 AC testing input, output waveform (a) and float waveform (b).

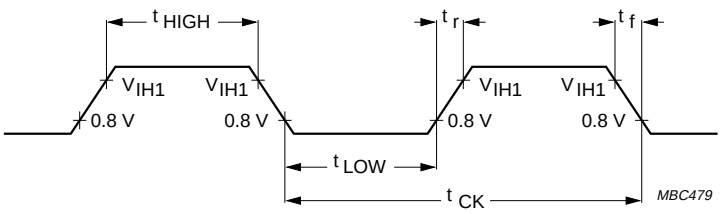

See Table 36.

Fig.32 External clock drive XTAL1.

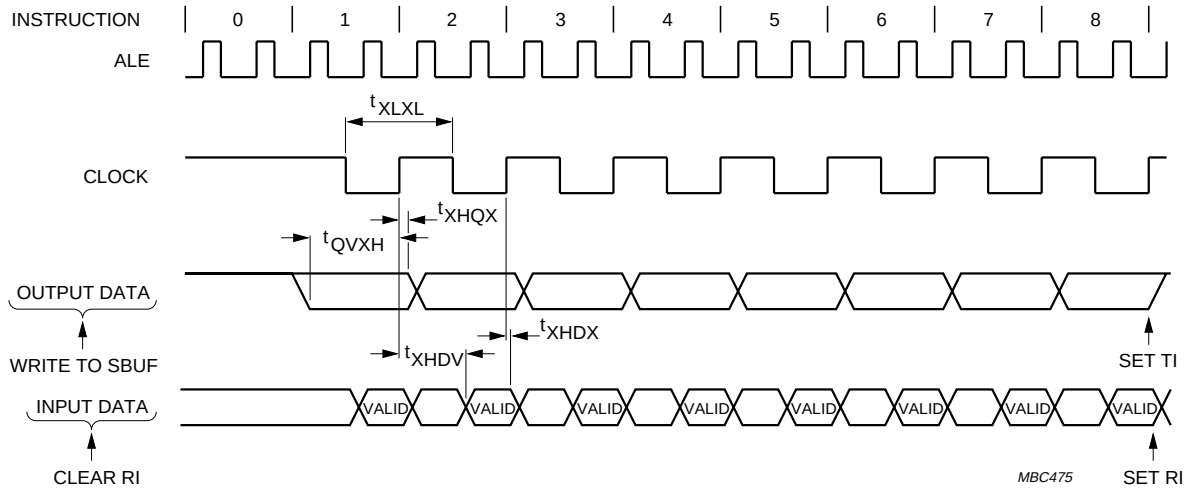

See Table 37.

Fig.33 Shift register mode timing waveforms.

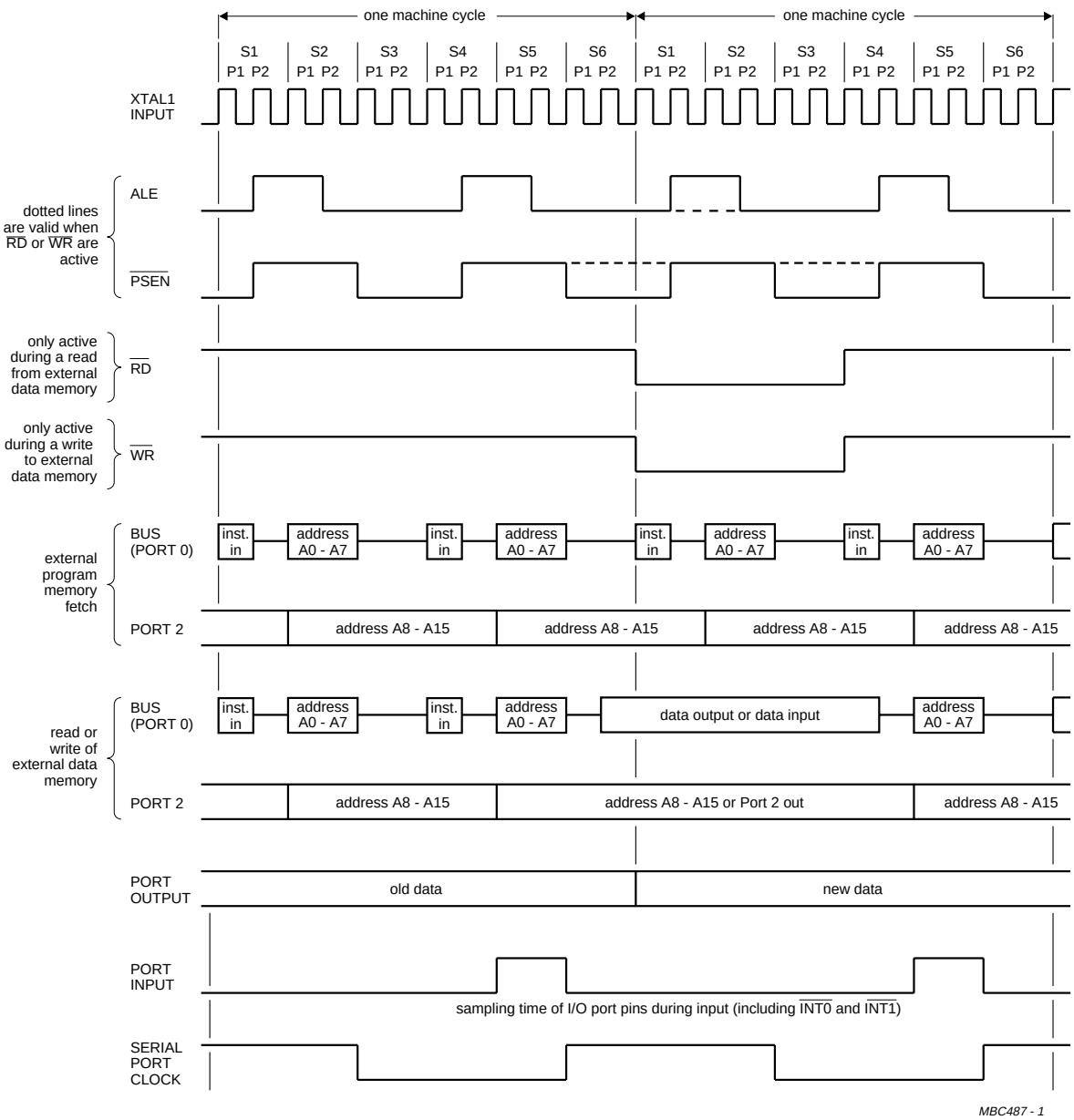

Fig.34 Instruction cycle timing.

25.1 Timing symbol definitions

Oscillator:

f_{CLK} = clock frequency

t_{CK} = clock period

Timing symbols (acronyms):

Each timing symbol has five characters. The first character is always a 't' (= time). the remaining four characters of the symbol (typed in subscript), depending on their relative positions, indicate the name of a signal or the logical status of that signal. the designations are as follows:

A =address

C = clock

D = input data

H = logic level HIGH

I = instruction (program memory contents)

L = Logic level LOW or ALE

P = $\overline{PSEN}$

Q = output data

R = $\overline{RD}$ signal

t = time

V = valid

W = $\overline{WR}$ signal

X = no longer a valid logic level

Z = float

Examples:

t_{AVLL} = time for address valid to ALE LOW

t_{LLPL} = time for ALE LOW to $\overline{PSEN}$ LOW

26 PACKAGE OUTLINES

DIP40: plastic dual in-line package; 40 leads (600 mil) **SOT129-1**

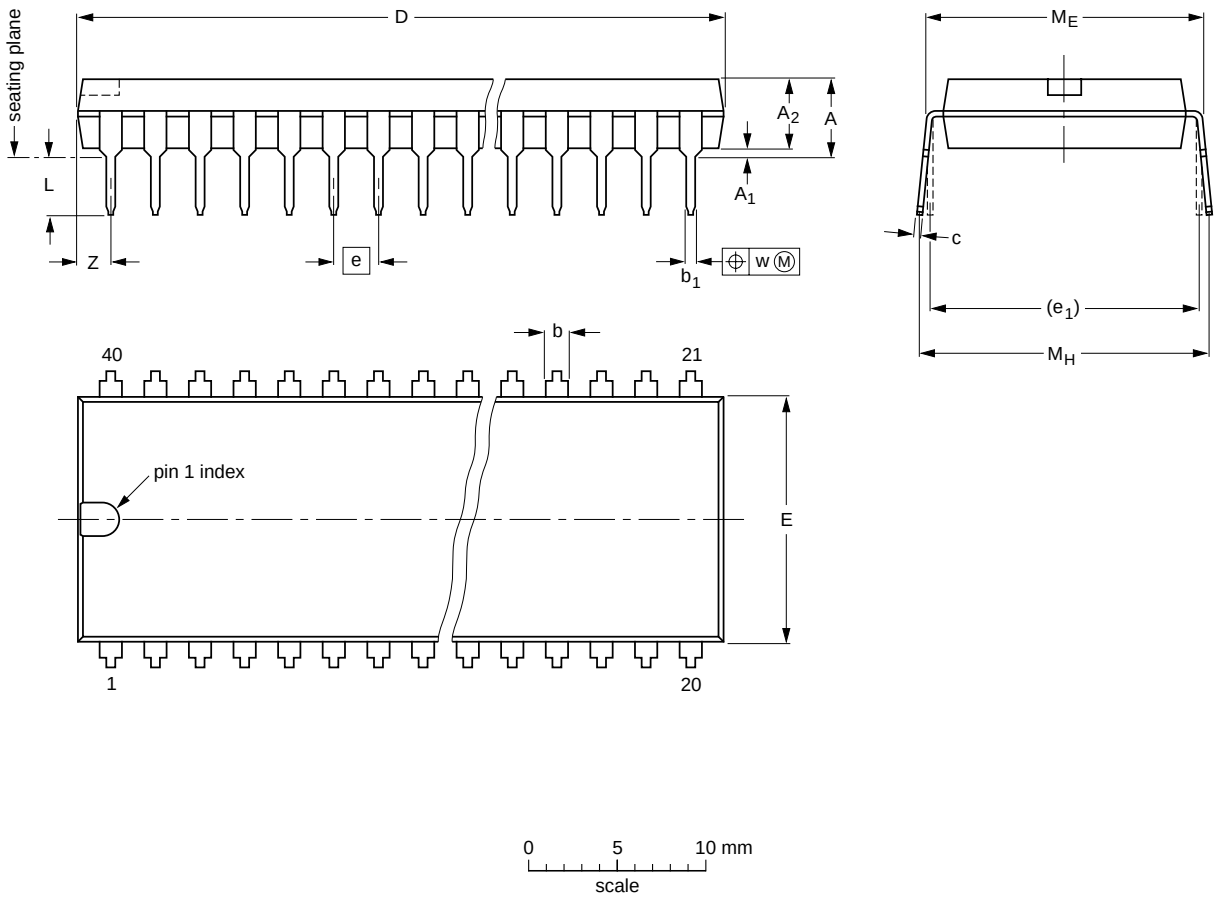

DIMENSIONS (inch dimensions are derived from the original mm dimensions)

UNIT	A max.	A_1 min.	A_2 max.	b	b_1	c	D (1)	E (1)	e	e_1	L	M_E	M_H	w	Z (1) max.
mm	4.7	0.51	4.0	1.70 1.14	0.53 0.38	0.36 0.23	52.50 51.50	14.1 13.7	2.54	15.24	3.60 3.05	15.80 15.24	17.42 15.90	0.254	2.25
inches	0.19	0.020	0.16	0.067 0.045	0.021 0.015	0.014 0.009	2.067 2.028	0.56 0.54	0.10	0.60	0.14 0.12	0.62 0.60	0.69 0.63	0.01	0.089

Note

1. Plastic or metal protrusions of 0.25 mm maximum per side are not included.

OUTLINE VERSION	REFERENCES				EUROPEAN PROJECTION	ISSUE DATE
	IEC	JEDEC	EIAJ			
SOT129-1	051G08	MO-015AJ				~~92-11-17~~ 95-01-14

PLCC44: plastic leaded chip carrier; 44 leads **SOT187-2**

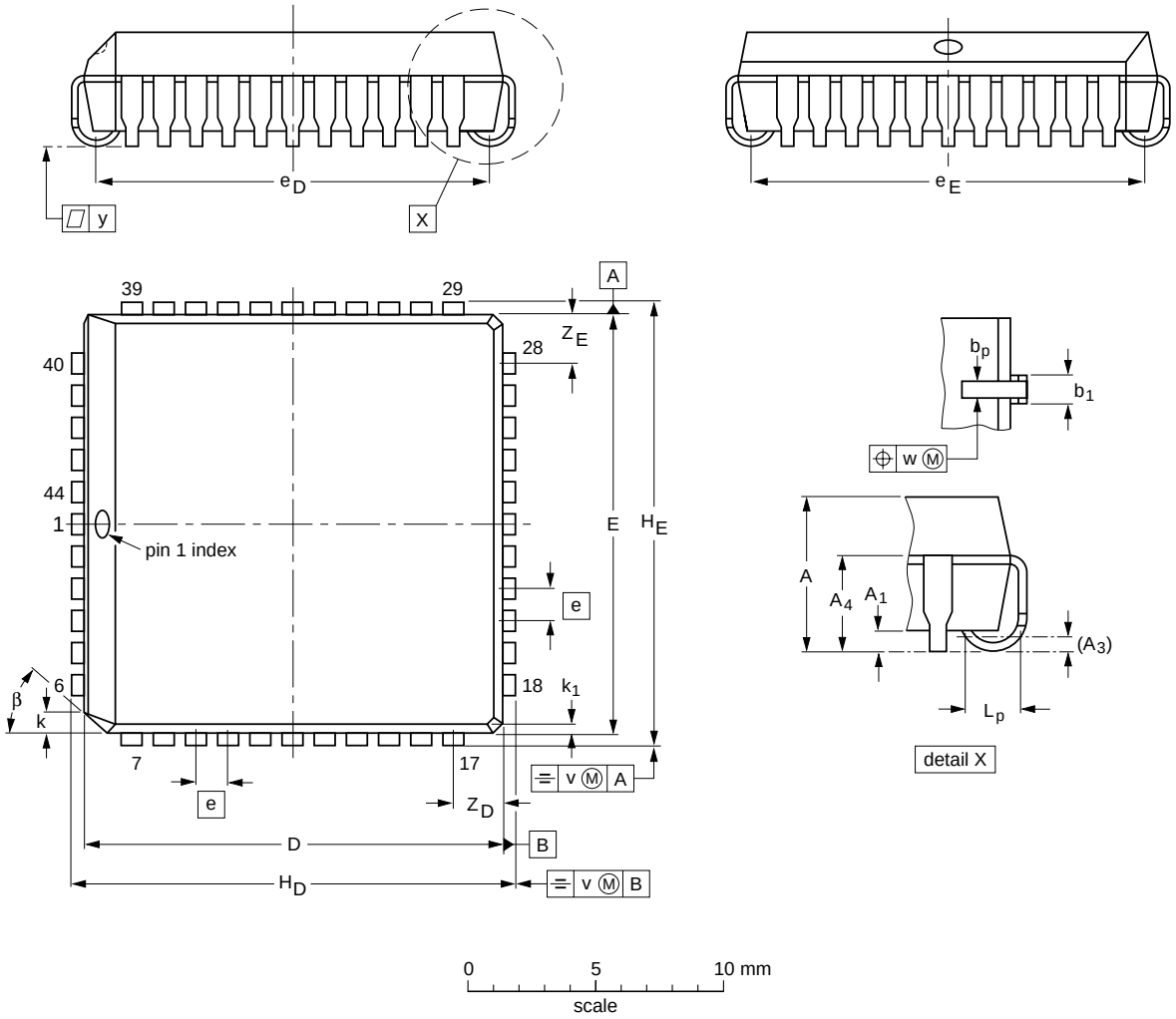

DIMENSIONS (millimetre dimensions are derived from the original inch dimensions)

UNIT	A	A_1 min.	A_3	A_4 max.	b_p	b_1	D(1)	E(1)	e	e_D	e_E	H_D	H_E	k	k_1 max.	L_p	v	w	y	Z_D(1) max.	Z_E(1) max.	β
mm	4.57 4.19	0.51	0.25	3.05	0.53 0.33	0.81 0.66	16.66 16.51	16.66 16.51	1.27	16.00 14.99	16.00 14.99	17.65 17.40	17.65 17.40	1.22 1.07	0.51	1.44 1.02	0.18	0.18	0.10	2.16	2.16	45°
inches	0.180 0.165	0.020	0.01	0.12	0.021 0.013	0.032 0.026	0.656 0.650	0.656 0.650	0.05	0.630 0.590	0.630 0.590	0.695 0.685	0.695 0.685	0.048 0.042	0.020	0.057 0.040	0.007	0.007	0.004	0.085	0.085	

Note

1. Plastic or metal protrusions of 0.01 inches maximum per side are not included.

OUTLINE VERSION	REFERENCES				EUROPEAN PROJECTION	ISSUE DATE
	IEC	JEDEC	EIAJ			
SOT187-2	112E10	MO-047AC				~~92-11-17~~ 95-02-25

QFP44: plastic quad flat package; 44 leads (lead length 1.3 mm); body 10 x 10 x 1.75 mm **SOT307-2**

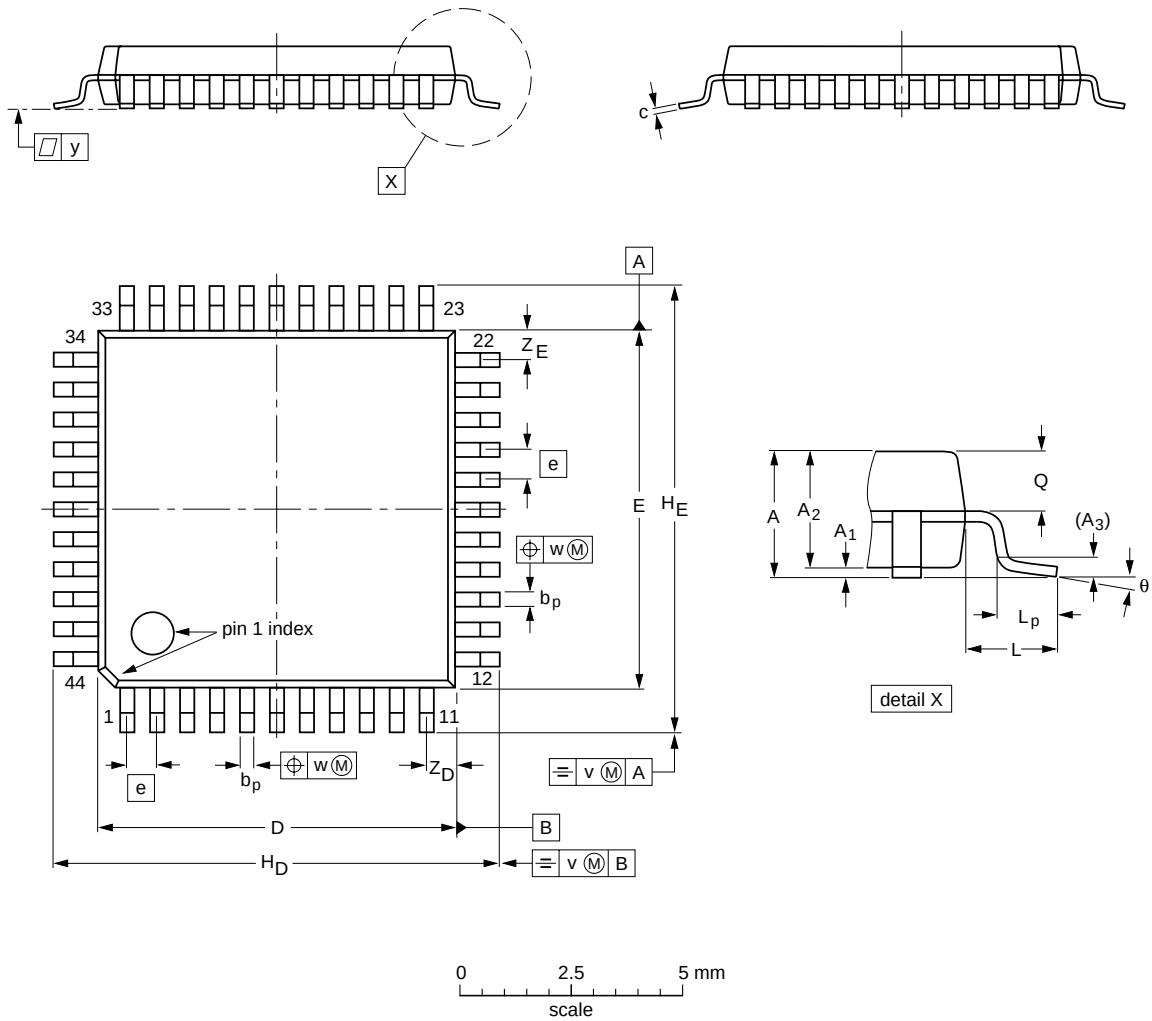

DIMENSIONS (mm are the original dimensions)

UNIT	A max.	A_1	A_2	A_3	b_p	c	D(1)	E(1)	e	H_D	H_E	L	L_p	Q	v	w	y	Z_D(1)	Z_E(1)	θ
mm	2.10	0.25 0.05	1.85 1.65	0.25	0.40 0.20	0.25 0.14	10.1 9.9	10.1 9.9	0.8	12.9 12.3	12.9 12.3	1.3	0.95 0.55	0.85 0.75	0.15	0.15	0.1	1.2 0.8	1.2 0.8	10° 0°

Note

1. Plastic or metal protrusions of 0.25 mm maximum per side are not included.

OUTLINE VERSION	REFERENCES				EUROPEAN PROJECTION	ISSUE DATE
	IEC	JEDEC	EIAJ			
SOT307-2						~~92-11-17~~ 95-02-04

27 SOLDERING

27.1 Introduction

There is no soldering method that is ideal for all IC packages. Wave soldering is often preferred when through-hole and surface mounted components are mixed on one printed-circuit board. However, wave soldering is not always suitable for surface mounted ICs, or for printed-circuits with high population densities. In these situations reflow soldering is often used.

This text gives a very brief insight to a complex technology. A more in-depth account of soldering ICs can be found in our *"IC Package Databook"* (order code 9398 652 90011).

27.2 DIP

27.2.1 SOLDERING BY DIPPING OR BY WAVE

The maximum permissible temperature of the solder is 260 °C; solder at this temperature must not be in contact with the joint for more than 5 seconds. The total contact time of successive solder waves must not exceed 5 seconds.

The device may be mounted up to the seating plane, but the temperature of the plastic body must not exceed the specified maximum storage temperature ($T_{stg\ max}$). If the printed-circuit board has been pre-heated, forced cooling may be necessary immediately after soldering to keep the temperature within the permissible limit.

27.2.2 REPAIRING SOLDERED JOINTS

Apply a low voltage soldering iron (less than 24 V) to the lead(s) of the package, below the seating plane or not more than 2 mm above it. If the temperature of the soldering iron bit is less than 300 °C it may remain in contact for up to 10 seconds. If the bit temperature is between 300 and 400 °C, contact may be up to 5 seconds.

27.3 PLCC and QFP

27.3.1 REFLOW SOLDERING

Reflow soldering techniques are suitable for all PLCC and QFP packages.

The choice of heating method may be influenced by larger PLCC or QFP packages (44 leads, or more). If infrared or vapour phase heating is used and the large packages are not absolutely dry (less than 0.1% moisture content by weight), vaporization of the small amount of moisture in them can cause cracking of the plastic body. For more information, refer to the Drypack chapter in our *"Quality Reference Handbook"* (order code 9397 750 00192).

Reflow soldering requires solder paste (a suspension of fine solder particles, flux and binding agent) to be applied to the printed-circuit board by screen printing, stencilling or pressure-syringe dispensing before package placement.

Several methods exist for reflowing; for example, infrared/convection heating in a conveyor type oven. Throughput times (preheating, soldering and cooling) vary between 50 and 300 seconds depending on heating method. Typical reflow peak temperatures range from 215 to 250 °C.

27.3.2 WAVE SOLDERING

27.3.2.1 PLCC

Wave soldering techniques can be used for all PLCC packages if the following conditions are observed:

- A double-wave (a turbulent wave with high upward pressure followed by a smooth laminar wave) soldering technique should be used.
- The longitudinal axis of the package footprint must be parallel to the solder flow.
- The package footprint must incorporate solder thieves at the downstream corners.

27.3.2.2 QFP

Wave soldering is **not** recommended for QFP packages. This is because of the likelihood of solder bridging due to closely-spaced leads and the possibility of incomplete solder penetration in multi-lead devices.

CAUTION
Wave soldering is NOT applicable for all QFP packages with a pitch (e) equal or less than 0.5 mm.

If wave soldering cannot be avoided, for QFP packages with a pitch (e) larger than 0.5 mm, the following conditions must be observed:

- **A double-wave (a turbulent wave with high upward pressure followed by a smooth laminar wave) soldering technique should be used.**
- **The footprint must be at an angle of 45° to the board direction and must incorporate solder thieves downstream and at the side corners.**

27.3.2.3 Method (PLCC and QFP)

During placement and before soldering, the package must be fixed with a droplet of adhesive. The adhesive can be applied by screen printing, pin transfer or syringe dispensing. The package can be soldered after the adhesive is cured.

Maximum permissible solder temperature is 260 °C, and maximum duration of package immersion in solder is 10 seconds, if cooled to less than 150 °C within 6 seconds. Typical dwell time is 4 seconds at 250 °C.

A mildly-activated flux will eliminate the need for removal of corrosive residues in most applications.

27.3.3 REPAIRING SOLDERED JOINTS

Fix the component by first soldering two diagonally-opposite end leads. Use only a low voltage soldering iron (less than 24 V) applied to the flat part of the lead. Contact time must be limited to 10 seconds at up to 300 °C. When using a dedicated tool, all other leads can be soldered in one operation within 2 to 5 seconds between 270 and 320 °C.

28 DEFINITIONS

Data sheet status	
Objective specification	This data sheet contains target or goal specifications for product development.
Preliminary specification	This data sheet contains preliminary data; supplementary data may be published later.
Product specification	This data sheet contains final product specifications.
Limiting values	
Limiting values given are in accordance with the Absolute Maximum Rating System (IEC 134). Stress above one or more of the limiting values may cause permanent damage to the device. These are stress ratings only and operation of the device at these or at any other conditions above those given in the Characteristics sections of this specification is not implied. Exposure to limiting values for extended periods may affect device reliability.	
Application information	
Where application information is given, it is advisory and does not form part of the specification.	

29 LIFE SUPPORT APPLICATIONS

These products are not designed for use in life support appliances, devices, or systems where malfunction of these products can reasonably be expected to result in personal injury. Philips customers using or selling these products for use in such applications do so at their own risk and agree to fully indemnify Philips for any damages resulting from such improper use or sale.

30 PURCHASE OF PHILIPS I²C COMPONENTS

Purchase of Philips I²C components conveys a license under the Philips' I²C patent to use the components in the I²C system provided the system conforms to the I²C specification defined by Philips. This specification can be ordered using the code 9398 393 40011.

NOTES

NOTES

NOTES

Philips Semiconductors – a worldwide company

Argentina: see South America

Australia: 34 Waterloo Road, NORTH RYDE, NSW 2113, Tel. +61 2 9805 4455, Fax. +61 2 9805 4466

Austria: Computerstr. 6, A-1101 WIEN, P.O. Box 213, Tel. +43 160 1010, Fax. +43 160 101 1210

Belarus: Hotel Minsk Business Center, Bld. 3, r. 1211, Volodarski Str. 6, 220050 MINSK, Tel. +375 172 200 733, Fax. +375 172 200 773

Belgium: see The Netherlands

Brazil: see South America

Bulgaria: Philips Bulgaria Ltd., Energoproject, 15th floor, 51 James Bourchier Blvd., 1407 SOFIA, Tel. +359 2 689 211, Fax. +359 2 689 102

Canada: PHILIPS SEMICONDUCTORS/COMPONENTS, Tel. +1 800 234 7381

China/Hong Kong: 501 Hong Kong Industrial Technology Centre, 72 Tat Chee Avenue, Kowloon Tong, HONG KONG, Tel. +852 2319 7888, Fax. +852 2319 7700

Colombia: see South America

Czech Republic: see Austria

Denmark: Prags Boulevard 80, PB 1919, DK-2300 COPENHAGEN S, Tel. +45 32 88 2636, Fax. +45 31 57 0044

Finland: Sinikalliontie 3, FIN-02630 ESPOO, Tel. +358 9 615800, Fax. +358 9 61580920

France: 51 Rue Carnot, BP317, 92156 SURESNES Cedex, Tel. +33 1 40 99 6161, Fax. +33 1 40 99 6427

Germany: Hammerbrookstraße 69, D-20097 HAMBURG, Tel. +49 40 23 53 60, Fax. +49 40 23 536 300

Greece: No. 15, 25th March Street, GR 17778 TAVROS/ATHENS, Tel. +30 1 4894 339/239, Fax. +30 1 4814 240

Hungary: see Austria

India: Philips INDIA Ltd, Band Box Building, 2nd floor, 254-D, Dr. Annie Besant Road, Worli, MUMBAI 400 025, Tel. +91 22 493 8541, Fax. +91 22 493 0966

Indonesia: see Singapore

Ireland: Newstead, Clonskeagh, DUBLIN 14, Tel. +353 1 7640 000, Fax. +353 1 7640 200

Israel: RAPAC Electronics, 7 Kehilat Saloniki St, PO Box 18053, TEL AVIV 61180, Tel. +972 3 645 0444, Fax. +972 3 649 1007

Italy: PHILIPS SEMICONDUCTORS, Piazza IV Novembre 3, 20124 MILANO, Tel. +39 2 6752 2531, Fax. +39 2 6752 2557

Japan: Philips Bldg 13-37, Kohnan 2-chome, Minato-ku, TOKYO 108, Tel. +81 3 3740 5130, Fax. +81 3 3740 5077

Korea: Philips House, 260-199 Itaewon-dong, Yongsan-ku, SEOUL, Tel. +82 2 709 1412, Fax. +82 2 709 1415

Malaysia: No. 76 Jalan Universiti, 46200 PETALING JAYA, SELANGOR, Tel. +60 3 750 5214, Fax. +60 3 757 4880

Mexico: 5900 Gateway East, Suite 200, EL PASO, TEXAS 79905, Tel. +9-5 800 234 7381

Middle East: see Italy

Netherlands: Postbus 90050, 5600 PB EINDHOVEN, Bldg. VB, Tel. +31 40 27 82785, Fax. +31 40 27 88399

New Zealand: 2 Wagener Place, C.P.O. Box 1041, AUCKLAND, Tel. +64 9 849 4160, Fax. +64 9 849 7811

Norway: Box 1, Manglerud 0612, OSLO, Tel. +47 22 74 8000, Fax. +47 22 74 8341

Philippines: Philips Semiconductors Philippines Inc., 106 Valero St. Salcedo Village, P.O. Box 2108 MCC, MAKATI, Metro MANILA, Tel. +63 2 816 6380, Fax. +63 2 817 3474

Poland: Ul. Lukiska 10, PL 04-123 WARSZAWA, Tel. +48 22 612 2831, Fax. +48 22 612 2327

Portugal: see Spain

Romania: see Italy

Russia: Philips Russia, Ul. Usatcheva 35A, 119048 MOSCOW, Tel. +7 095 755 6918, Fax. +7 095 755 6919

Singapore: Lorong 1, Toa Payoh, SINGAPORE 1231, Tel. +65 350 2538, Fax. +65 251 6500

Slovakia: see Austria

Slovenia: see Italy

South Africa: S.A. PHILIPS Pty Ltd., 195-215 Main Road Martindale, 2092 JOHANNESBURG, P.O. Box 7430 Johannesburg 2000, Tel. +27 11 470 5911, Fax. +27 11 470 5494

South America: Al. Vicente Pinzon, 173, 6th floor, 04547-130 SÃO PAULO, SP, Brazil, Tel. +55 11 821 2333, Fax. +55 11 821 2382

Spain: Balmes 22, 08007 BARCELONA, Tel. +34 3 301 6312, Fax. +34 3 301 4107

Sweden: Kottbygatan 7, Akalla, S-16485 STOCKHOLM, Tel. +46 8 632 2000, Fax. +46 8 632 2745

Switzerland: Allmendstrasse 140, CH-8027 ZÜRICH, Tel. +41 1 488 2686, Fax. +41 1 481 7730

Taiwan: Philips Semiconductors, 6F, No. 96, Chien Kuo N. Rd., Sec. 1, TAIPEI, Taiwan Tel. +886 2 2134 2865, Fax. +886 2 2134 2874

Thailand: PHILIPS ELECTRONICS (THAILAND) Ltd., 209/2 Sanpavuth-Bangna Road Prakanong, BANGKOK 10260, Tel. +66 2 745 4090, Fax. +66 2 398 0793

Turkey: Talatpasa Cad. No. 5, 80640 GÜLTEPE/ISTANBUL, Tel. +90 212 279 2770, Fax. +90 212 282 6707

Ukraine: PHILIPS UKRAINE, 4 Patrice Lumumba str., Building B, Floor 7, 252042 KIEV, Tel. +380 44 264 2776, Fax. +380 44 268 0461

United Kingdom: Philips Semiconductors Ltd., 276 Bath Road, Hayes, MIDDLESEX UB3 5BX, Tel. +44 181 730 5000, Fax. +44 181 754 8421

United States: 811 East Arques Avenue, SUNNYVALE, CA 94088-3409, Tel. +1 800 234 7381

Uruguay: see South America

Vietnam: see Singapore

Yugoslavia: PHILIPS, Trg N. Pasica 5/v, 11000 BEOGRAD, Tel. +381 11 625 344, Fax.+381 11 635 777

For all other countries apply to: Philips Semiconductors, International Marketing & Sales Communications, Building BE-p, P.O. Box 218, 5600 MD EINDHOVEN, The Netherlands, Fax. +31 40 27 24825

Internet: http://www.semiconductors.philips.com

© Philips Electronics N.V. 1997

SCA56

All rights are reserved. Reproduction in whole or in part is prohibited without the prior written consent of the copyright owner.

The information presented in this document does not form part of any quotation or contract, is believed to be accurate and reliable and may be changed without notice. No liability will be accepted by the publisher for any consequence of its use. Publication thereof does not convey nor imply any license under patent- or other industrial or intellectual property rights.

Printed in The Netherlands 457047/25/01/pp76 Date of release: 1997 Dec 15 Document order number: 9397 750 02916

Let's make things better.

Philips Semiconductors

PHILIPS

OCEAN CHIPS
Океан Электроники
Поставка электронных компонентов

Компания «Океан Электроники» предлагает заключение долгосрочных отношений при поставках импортных электронных компонентов на взаимовыгодных условиях!

Наши преимущества:

- Поставка оригинальных импортных электронных компонентов напрямую с производств Америки, Европы и Азии, а так же с крупнейших складов мира;
- Широкая линейка поставок активных и пассивных импортных электронных компонентов (более 30 млн. наименований);
- Поставка сложных, дефицитных, либо снятых с производства позиций;
- Оперативные сроки поставки под заказ (от 5 рабочих дней);
- Экспресс доставка в любую точку России;
- Помощь Конструкторского Отдела и консультации квалифицированных инженеров;
- Техническая поддержка проекта, помощь в подборе аналогов, поставка прототипов;
- Поставка электронных компонентов под контролем ВП;
- Система менеджмента качества сертифицирована по Международному стандарту ISO 9001;
- При необходимости вся продукция военного и аэрокосмического назначения проходит испытания и сертификацию в лаборатории (по согласованию с заказчиком);
- Поставка специализированных компонентов военного и аэрокосмического уровня качества (Xilinx, Altera, Analog Devices, Intersil, Interpoint, Microsemi, Actel, Aeroflex, Peregrine, VPT, Syfer, Eurofarad, Texas Instruments, MS Kennedy, Miteq, Cobham, E2V, MA-COM, Hittite, Mini-Circuits, General Dynamics и др.);

Компания «Океан Электроники» является официальным дистрибьютором и эксклюзивным представителем в России одного из крупнейших производителей разъемов военного и аэрокосмического назначения **«JONHON»**, а так же официальным дистрибьютором и эксклюзивным представителем в России производителя высокотехнологичных и надежных решений для передачи СВЧ сигналов **«FORSTAR»**.

AVIC JONHON

«JONHON» (основан в 1970 г.)

Разъемы специального, военного и аэрокосмического назначения:

(Применяются в военной, авиационной, аэрокосмической, морской, железнодорожной, горно- и нефтедобывающей отраслях промышленности)

«FORSTAR» (основан в 1998 г.)

ВЧ соединители, коаксиальные кабели, кабельные сборки и микроволновые компоненты:

(Применяются в телекоммуникациях гражданского и специального назначения, в средствах связи, РЛС, а так же военной, авиационной и аэрокосмической отраслях промышленности).

FORSTAR®

Телефон: 8 (812) 309-75-97 (многоканальный)
Факс: 8 (812) 320-03-32
Электронная почта: ocean@oceanchips.ru
Web: http://oceanchips.ru/
Адрес: 198099, г. Санкт-Петербург, ул. Калинина, д. 2, корп. 4, лит. А