Lxx04xx & Qxx04xx Series

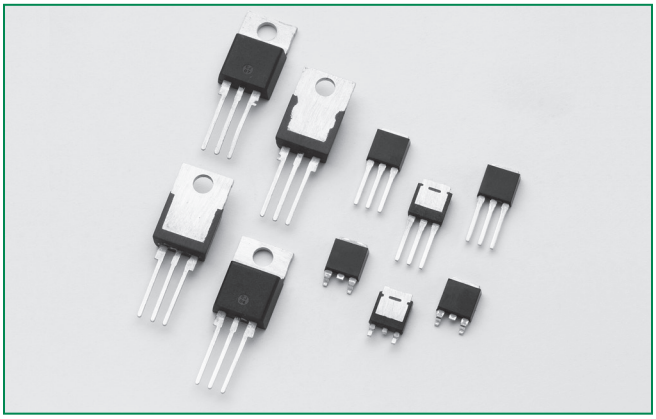

Agency Approval

Agency	Agency File Number
®	L Package : E71639

Main Features

Symbol	Value	Unit
$I_{T(RMS)}$	4	A
V_{DRM}/V_{RRM}	400 to 1000	V
$I_{GT\ (Q1)}$	3 to 25	mA

Schematic Symbol

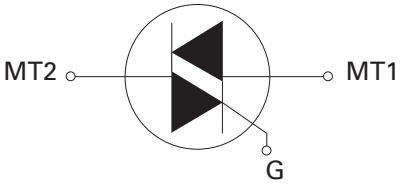

Description

4 Amp bi-directional solid state switch series is designed for AC switching and phase control applications such as motor speed and temperature modulation controls, lighting controls, and static switching relays.

Sensitive type devices guarantee gate control in Quadrants I & IV needed for digital control circuitry.

Standard type devices normally operate in Quadrants I & III triggered from AC line.

Features & Benefits

- RoHS Compliant
- Glass – passivated junctions
- Voltage capability up to 1000 V
- Surge capability up to 55 A
- Electrically isolated "L-Package" is UL recognized for 2500Vrms
- Solid-state switching eliminates arcing or contact bounce that create voltage transients
- No contacts to wear out from reaction of switching events
- Restricted (or limited) RFI generation, depending on activation point of sine wave
- Requires only a small gate activation pulse in each half-cycle

Applications

Typical applications are AC solid-state switches, power tools, home/brown goods and white goods appliances.

Sensitive gate Triacs can be directly driven by microprocessor or popular opto-couplers/isolators.

Internally constructed isolated packages are offered for ease of heat sinking with highest isolation voltage.

Absolute Maximum Ratings — Sensitive Triacs (4 Quadrants)

Symbol	Parameter			Value	Unit
$I_{T(RMS)}$	RMS on-state current (full sine wave)	Lxx04Ly / Lxx04Dy	T_C = 85°C	4	A
		Lxx04Ry / Lxx04Vy	T_C = 75°C		
I_{TSM}	Non repetitive surge peak on-state current (full cycle, T_J initial = 25°C)	f = 50 Hz	t = 20 ms	33	A
		f = 60 Hz	t = 16.7 ms	40	
I^2t	I^2t Value for fusing	t_p = 8.3 ms		6.6	A^2s
di/dt	Critical rate of rise of on-state current (I_G = 50mA with ≤ 0.1µs rise time)	f = 120 Hz	T_J = 110°C	50	A/µs
I_{GTM}	Peak gate trigger current	t_p ≤ 10 µs	T_J = 110°C	1.2	A
$P_{G(AV)}$	Average gate power dissipation		T_J = 110°C	0.3	W
T_{stg}	Storage temperature range			-40 to 150	°C
T_J	Operating junction temperature range			-40 to 110	°C

Note: xx = voltage, y = sensitivity

©2011 Littelfuse, Inc
Specifications are subject to change without notice.
Please refer to http://www.littelfuse.com for current information.

Absolute Maximum Ratings — Standard Triacs

Symbol	Parameter			Value	Unit
$I_{T(RMS)}$	RMS on-state current (full sine wave)	Qxx04Ly / Qxx04Dy	T_C = 95°C	4	A
		Qxx04Ry / Qxx04Vy	T_C = 85°C		
I_{TSM}	Non repetitive surge peak on-state current (full cycle, T_J initial = 25°C)	f = 50 Hz	t = 20 ms	46	A
		f = 60 Hz	t = 16.7 ms	55	
I^2t	I^2t Value for fusing	t_p = 8.3 ms		12.5	A^2s
di/dt	Critical rate of rise of on-state current (I_G = 50mA with ≤ 0.1µs rise time)	f = 120 Hz	T_J = 125°C	50	A/µs
I_{GTM}	Peak gate trigger current	t_p ≤ 10 µs; I_{GT} ≤ I_{GTM}	T_J = 125°C	1.2	A
$P_{G(AV)}$	Average gate power dissipation		T_J = 125°C	0.3	W
T_{stg}	Storage temperature range			-40 to 150	°C
T_J	Operating junction temperature range			-40 to 125	°C

Note: xx = voltage, y = sensitivity

Electrical Characteristics (T_J = 25°C, unless otherwise specified) — Sensitive Triac (4 Quadrants)

Symbol	Test Conditions	Quadrant		Lxx04x3	Lxx04x5	Lxx04x6	Lxx04x8	Unit
I_{GT}	V_D = 12V R_L = 60 Ω	I – II – III	MAX.	3	5	5	10	mA
		IV		3	5	10	20	
V_{GT}		ALL	MAX.	1.3				V
V_{GD}	V_D = V_{DRM} R_L = 3.3 kΩ T_J = 110°C	ALL	MIN.	0.2				V
I_H	I_T = 100mA		MAX.	5	10	10	15	mA
dv/dt	V_D = V_{DRM} Gate Open T_J = 100°C	400V	TYP.	25	25	30	35	V/µs
		600V		15	15	20	25	
(dv/dt)c	(di/dt)c = 2.16 A/ms T_J = 110°C		TYP.	0.5	1	1	1	V/µs
t_{gt}	I_G = 2 x I_{GT} PW = 15µs I_T = 5.6 A(pk)		TYP.	2.8	3.0	3.0	3.2	µs

Electrical Characteristics (T_J = 25°C, unless otherwise specified) — Standard Triac

Symbol	Test Conditions	Quadrant		Qxx04x3	Qxx04x4	Unit
I_{GT}	V_D = 12V R_L = 60 Ω	I – II – III	MAX.	10	25	mA
		IV	TYP.	25	50	
V_{GT}		I – II – III	MAX.	1.3	1.3	V
V_{GD}	V_D = V_{DRM} R_L = 3.3 kΩ T_J = 125°C	ALL	MIN.	0.2	0.2	V
I_H	I_T = 200mA		MAX.	20	30	mA
dv/dt	V_D = V_{DRM} Gate Open T_J = 125°C	400V	MIN.	40	75	V/µs
		600V		30	50	
		800V			40	
	V_D = V_{DRM} Gate Open T_J = 100°C	1000V			50	
(dv/dt)c	(di/dt)c = 2.16 A/ms T_J = 125°C		TYP.	2	2	V/µs
t_{gt}	I_G = 2 x I_{GT} PW = 15µs I_T = 5.6 A(pk)		TYP.	2.5	3.0	µs

Note: xx = voltage, x = package

©2011 Littelfuse, Inc
Specifications are subject to change without notice.
Please refer to http://www.littelfuse.com for current information.

Static Characteristics (T_J = 25°C, unless otherwise specified)

Symbol	Test Conditions					Value	Unit
V_{TM}	I_{TM} = 5.6A t_p = 380 µs	MAX.				1.60	V
I_{DRM} I_{RRM}	$V_{DRM} = V_{RRM}$	MAX.	Lxx04xy	T_J = 25°C	400-600V	5	µA
				T_J = 110°C	400-600V	200	µA
			Qxx04xy	T_J = 25°C	400-1000V	10	µA
				T_J = 125°C	400-800V	2	mA
				T_J = 100°C	1000V	3	mA

Thermal Resistances

Symbol	Parameter		Value	Unit
$R_{\theta(J-C)}$	Junction to case (AC)	L/Qxx04Dy	3.5	°C/W
		L/Qxx04Ly	3.6	
		L/Qxx04Ry	3.6	
		L/Qxx04Vy	6.0	
$R_{\theta(J-A)}$	Junction to ambient	L/Qxx04Ly	50	°C/W
		L/Qxx04Ry	45	
		L/Qxx04Vy	70	

Note: xx = voltage, x = package, y = sensitivity

Figure 1: Definition of Quadrants

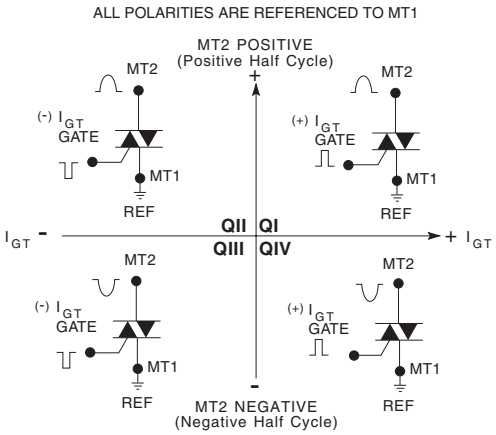

Figure 2: Normalized DC Gate Trigger Current for All Quadrants vs. Junction Temperature

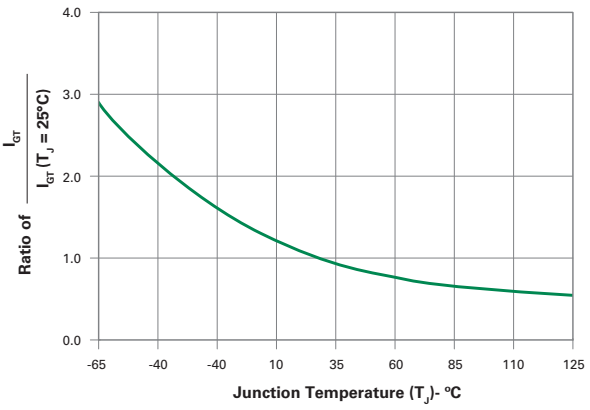

©2011 Littelfuse, Inc
Specifications are subject to change without notice.
Please refer to http://www.littelfuse.com for current information.

Figure 3: Normalized DC Holding Current vs. Junction Temperature

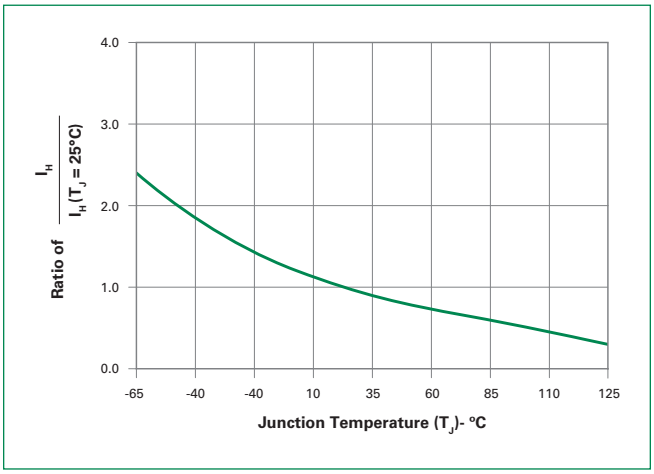

Figure 4: Normalized DC Gate Trigger Voltage for All Quadrants vs. Junction Temperature

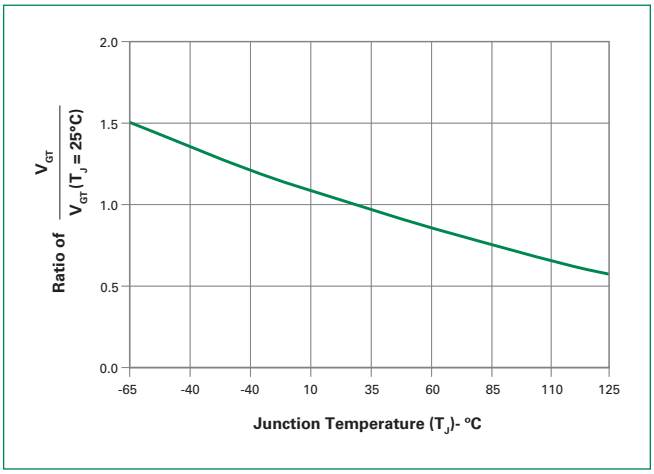

Figure 5: Power Dissipation (Typical) vs. RMS On-State Current

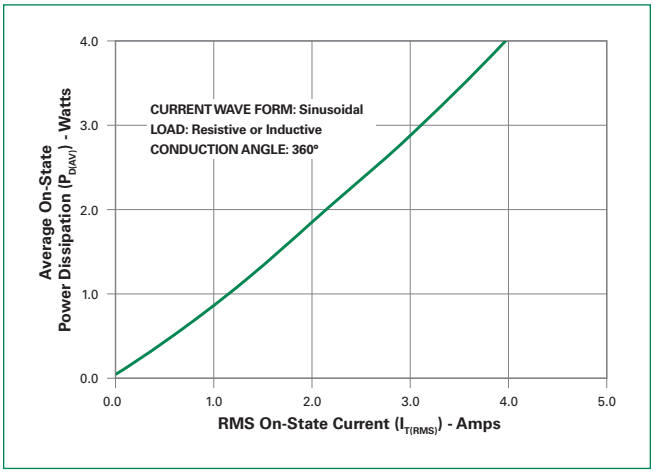

Figure 6: Maximum Allowable Case Temperature vs. On-State Current

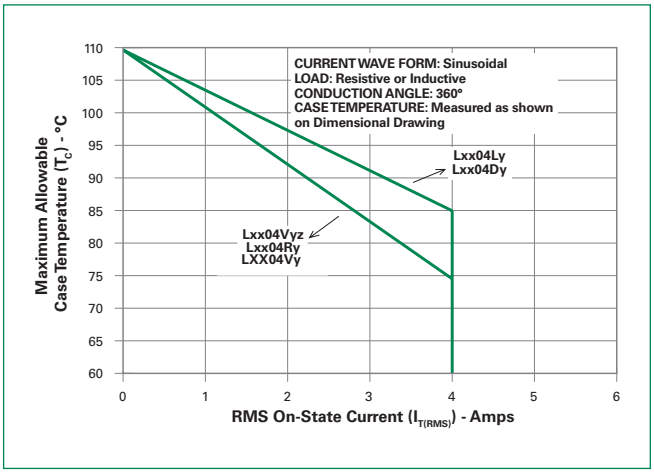

Figure 7: Maximum Allowable Case Temperature vs. On-State Current

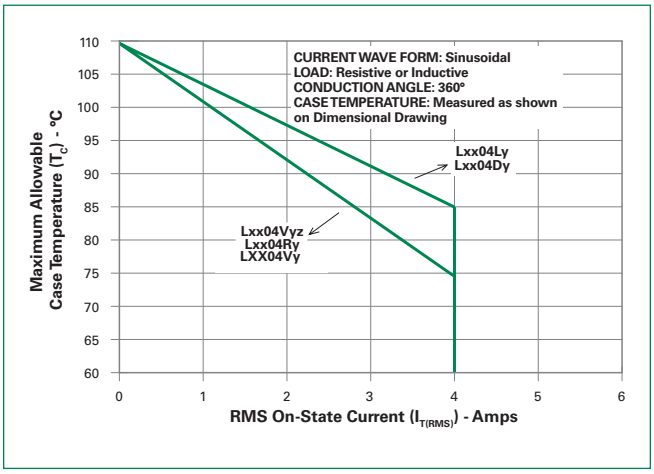

Figure 8: Maximum Allowable Ambient Temperature vs. On-State Current

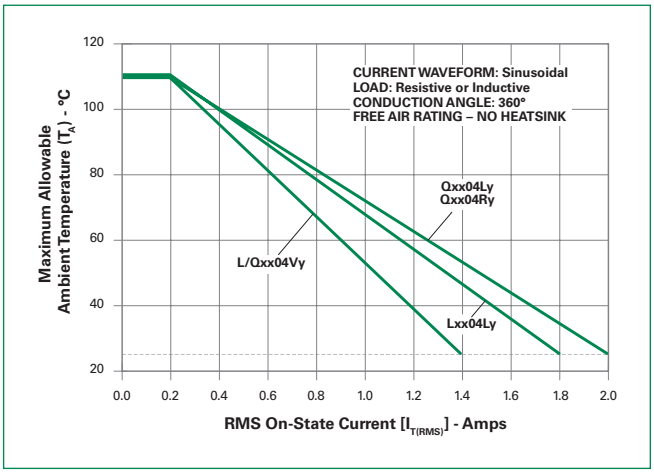

Note: xx = voltage, y = sensitivity

©2011 Littelfuse, Inc
Specifications are subject to change without notice.
Please refer to http://www.littelfuse.com for current information.

Figure 9: On-State Current vs. On-State Voltage (Typical)

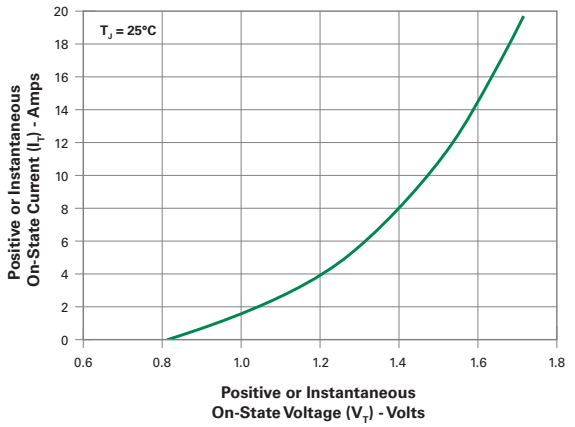

Figure 10: Surge Peak On-State Current vs. Number of Cycles

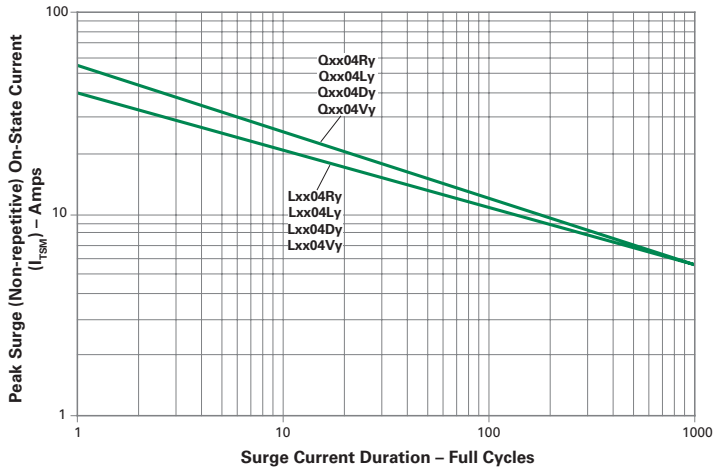

Supply Frequency: 60Hz Sinusoidal
Load: Resistive
RMS On-State [$I_{T(RMS)}$]: Max Rated Value at Specific Case Temperature

Notes:
1. Gate control may be lost during and immediately following surge current interval.
2. Overload may not be repeated until junction temperature has returned to steady-state rated value.

Note: xx = voltage, y = sensitivity

©2011 Littelfuse, Inc
Specifications are subject to change without notice.
Please refer to http://www.littelfuse.com for current information.

Soldering Parameters

Reflow Condition		Pb – Free assembly
Pre Heat	-Temperature Min ($T_{s(min)}$)	150°C
	-Temperature Max ($T_{s(max)}$)	200°C
	-Time (min to max) (t_s)	60 – 180 secs
Average ramp up rate (Liquidus Temp) (T_L) to peak		5°C/second max
$T_{S(max)}$ to T_L - Ramp-up Rate		5°C/second max
Reflow	-Temperature (T_L) (Liquidus)	217°C
	-Temperature (t_L)	60 – 150 seconds
Peak Temperature (T_P)		260°C $^{+0/-5}$
Time within 5°C of actual peak Temperature (t_p)		20 – 40 seconds
Ramp-down Rate		5°C/second max
Time 25°C to peak Temperature (T_P)		8 minutes Max.
Do not exceed		280°C

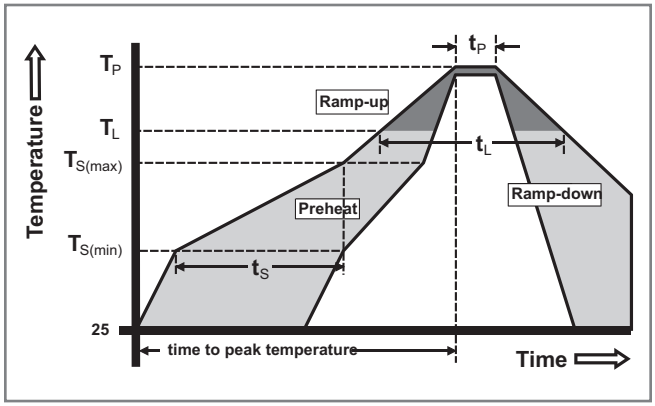

Physical Specifications

Terminal Finish	100% Matte Tin-plated
Body Material	UL recognized epoxy meeting flammability classification 94V-0
Terminal Material	Copper Alloy

Design Considerations

Careful selection of the correct device for the application's operating parameters and environment will go a long way toward extending the operating life of the Thyristor. Good design practice should limit the maximum continuous current through the main terminals to 75% of the device rating. Other ways to ensure long life for a power discrete semiconductor are proper heat sinking and selection of voltage ratings for worst case conditions. Overheating, overvoltage (including dv/dt), and surge currents are the main killers of semiconductors. Correct mounting, soldering, and forming of the leads also help protect against component damage.

Environmental Specifications

Test	Specifications and Conditions
AC Blocking	MIL-STD-750, M-1040, Cond A Applied Peak AC voltage @ 125°C for 1008 hours
Temperature Cycling	MIL-STD-750, M-1051, 100 cycles; -40°C to +150°C; 15-min dwell time
Temperature/ Humidity	EIA / JEDEC, JESD22-A101 1008 hours; 320V - DC: 85°C; 85% rel humidity
High Temp Storage	MIL-STD-750, M-1031, 1008 hours; 150°C
Low-Temp Storage	1008 hours; -40°C
Thermal Shock	MIL-STD-750, M-1056 10 cycles; 0°C to 100°C; 5-min dwell time at each temperature; 10 sec (max) transfer time between temperature
Autoclave	EIA / JEDEC, JESD22-A102 168 hours (121°C at 2 ATMs) and 100% R/H
Resistance to Solder Heat	MIL-STD-750 Method 2031
Solderability	ANSI/J-STD-002, category 3, Test A
Lead Bend	MIL-STD-750, M-2036 Cond E

©2011 Littelfuse, Inc
Specifications are subject to change without notice.
Please refer to http://www.littelfuse.com for current information.

Dimensions — TO-220AB (R-Package) — Non-Isolated Mounting Tab Common with Center Lead

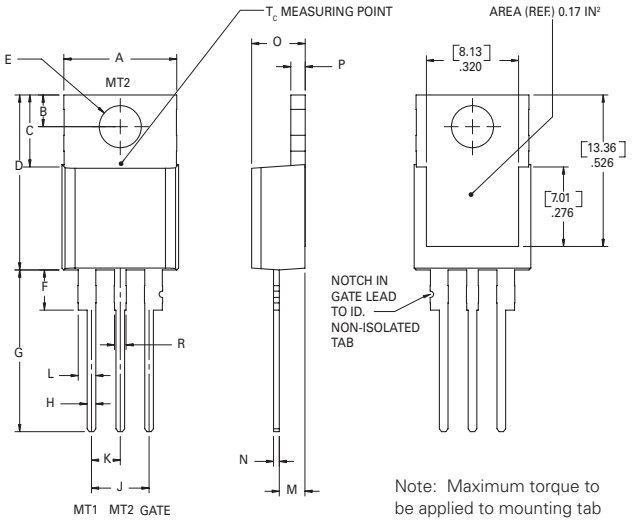

Note: Maximum torque to be applied to mounting tab is 8 in-lbs. (0.904 Nm).

Dimension	Inches		Millimeters	
	Min	Max	Min	Max
A	0.380	0.420	9.65	10.67
B	0.105	0.115	2.67	2.92
C	0.230	0.250	5.84	6.35
D	0.590	0.620	14.99	15.75
E	0.142	0.147	3.61	3.73
F	0.110	0.130	2.79	3.30
G	0.540	0.575	13.72	14.61
H	0.025	0.035	0.64	0.89
J	0.195	0.205	4.95	5.21
K	0.095	0.105	2.41	2.67
L	0.060	0.075	1.52	1.91
M	0.085	0.095	2.16	2.41
N	0.018	0.024	0.46	0.61
O	0.178	0.188	4.52	4.78
P	0.045	0.060	1.14	1.52
R	0.038	0.048	0.97	1.22

Dimensions — TO-220AB (L-Package) — Isolated Mounting Tab

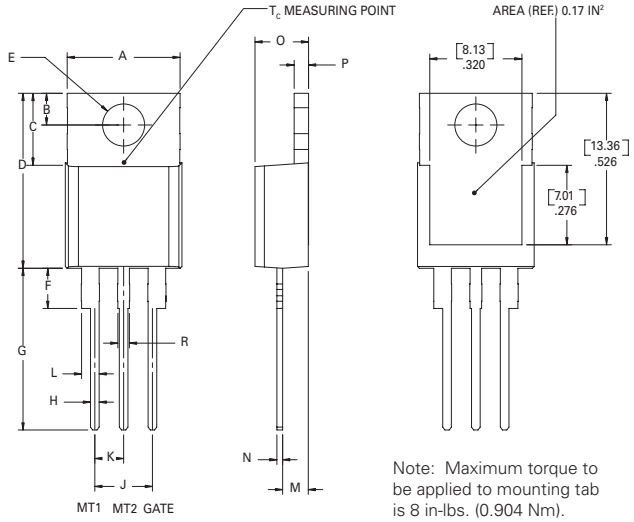

Note: Maximum torque to be applied to mounting tab is 8 in-lbs. (0.904 Nm).

Dimension	Inches		Millimeters	
	Min	Max	Min	Max
A	0.380	0.420	9.65	10.67
B	0.105	0.115	2.67	2.92
C	0.230	0.250	5.84	6.35
D	0.590	0.620	14.99	15.75
E	0.142	0.147	3.61	3.73
F	0.110	0.130	2.79	3.30
G	0.540	0.575	13.72	14.61
H	0.025	0.035	0.64	0.89
J	0.195	0.205	4.95	5.21
K	0.095	0.105	2.41	2.67
L	0.060	0.075	1.52	1.91
M	0.085	0.095	2.16	2.41
N	0.018	0.024	0.46	0.61
O	0.178	0.188	4.52	4.78
P	0.045	0.060	1.14	1.52
R	0.038	0.048	0.97	1.22

©2011 Littelfuse, Inc
Specifications are subject to change without notice.
Please refer to http://www.littelfuse.com for current information.

Dimensions — TO-251AA (V-Package) — V-PAK Through Hole

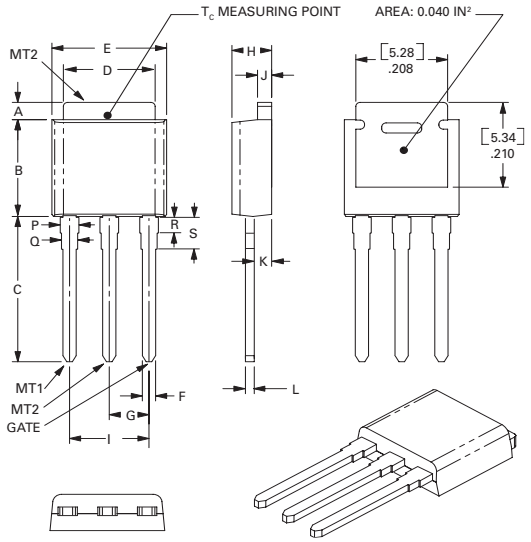

Dimension	Inches			Millimeters		
	Min	Typ	Max	Min	Typ	Max
A	0.040	0.044	0.050	1.02	1.11	1.27
B	0.235	0.242	0.245	5.97	6.15	6.22
C	0.350	0.361	0.375	8.89	9.18	9.53
D	0.205	0.208	0.213	5.21	5.29	5.41
E	0.255	0.262	0.265	6.48	6.66	6.73
F	0.027	0.031	0.033	0.69	0.80	0.84
G	0.087	0.090	0.093	2.21	2.28	2.36
H	0.085	0.092	0.095	2.16	2.34	2.41
I	0.176	0.180	0.184	4.47	4.57	4.67
J	0.018	0.020	0.023	0.46	0.51	0.58
K	0.038	0.040	0.044	0.97	1.01	1.12
L	0.018	0.020	0.023	0.46	0.52	0.58
P	0.042	0.047	0.052	1.06	1.20	1.32
Q	0.034	0.039	0.044	0.86	1.00	1.11
R	0.034	0.039	0.044	0.86	1.00	1.11
S	0.074	0.079	0.084	1.86	2.00	2.11

Dimensions — TO-252AA (D-Package) — D-PAK Surface Mount

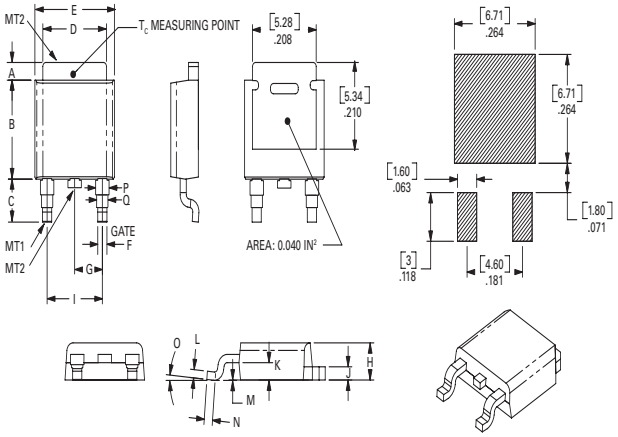

Dimension	Inches			Millimeters		
	Min	Typ	Max	Min	Typ	Max
A	0.040	0.043	0.050	1.02	1.09	1.27
B	0.235	0.243	0.245	5.97	6.16	6.22
C	0.106	0.108	0.113	2.69	2.74	2.87
D	0.205	0.208	0.213	5.21	5.29	5.41
E	0.255	0.262	0.265	6.48	6.65	6.73
F	0.027	0.031	0.033	0.69	0.80	0.84
G	0.087	0.090	0.093	2.21	2.28	2.36
H	0.085	0.092	0.095	2.16	2.33	2.41
I	0.176	0.179	0.184	4.47	4.55	4.67
J	0.018	0.020	0.023	0.46	0.51	0.58
K	0.038	0.040	0.044	0.97	1.02	1.12
L	0.018	0.020	0.023	0.46	0.51	0.58
M	0.000	0.000	0.004	0.00	0.00	0.10
N	0.021	0.026	0.027	0.53	0.67	0.69
O	0°	0°	5°	0°	0°	5°
P	0.042	0.047	0.052	1.06	1.20	1.32
Q	0.034	0.039	0.044	0.86	1.00	1.11

©2011 Littelfuse, Inc
Specifications are subject to change without notice.
Please refer to http://www.littelfuse.com for current information.

Product Selector

Part Number	Voltage				Gate Sensitivity Quadrants		Type	Package
	400V	600V	800V	1000V	I – II – III	IV		
Lxx04L3	X	X			3 mA	3 mA	Sensitive Triac	TO-220L
Lxx04D3	X	X			3 mA	3 mA	Sensitive Triac	TO-252 D-PAK
Lxx04R3	X	X			3mA	3mA	Sensitive Triac	TO-220R
Lxx04V3	X	X			3 mA	3 mA	Sensitive Triac	TO-251 V-PAK
Lxx04L5	X	X			5 mA	5 mA	Sensitive Triac	TO-220L
Lxx04D5	X	X			5 mA	5 mA	Sensitive Triac	TO-252 D-PAK
Lxx04R5	X	X			5mA	5mA	Sensitive Triac	TO-220R
Lxx04V5	X	X			5 mA	5 mA	Sensitive Triac	TO-251 V-PAK
Lxx04L6	X	X			5 mA	10 mA	Sensitive Triac	TO-220L
Lxx04D6	X	X			5 mA	10 mA	Sensitive Triac	TO-252 D-PAK
Lxx04R6	X	X			5mA	10mA	Sensitive Triac	TO-220R
Lxx04V6	X	X			5 mA	10 mA	Sensitive Triac	TO-251 V-PAK
Lxx04L8	X	X			10 mA	20 mA	Sensitive Triac	TO-220L
Lxx04D8	X	X			10 mA	20 mA	Sensitive Triac	TO-252 D-PAK
Lxx04R8	X	X			10mA	20mA	Sensitive Triac	TO-220R
Lxx04V8	X	X			10 mA	20 mA	Sensitive Triac	TO-251 V-PAK
Qxx04L3	X	X			10 mA		Standard Triac	TO-220L
Qxx04D3	X	X			10 mA		Standard Triac	TO-252 D-PAK
Qxx04V3	X	X			10 mA		Standard Triac	TO-251 V-PAK
Qxx04R3	X	X			10mA		Standard Triac	TO-220R
Qxx04L4	X	X	X	X	25 mA		Standard Triac	TO-220L
Qxx04D4	X	X	X	X	25 mA		Standard Triac	TO-252 D-PAK
Qxx04R4	X	X	X	X	25mA		Standard Triac	TO-220R
Qxx04V4	X	X	X	X	25 mA		Standard Triac	TO-251 V-PAK

Packing Options

Part Number	Marking	Weight	Packing Mode	Base Quantity
L/Q004L/Ry/TP	L/Qxx04L/Ry	2.2 g	Bulk	500
L/Qxx04LyTP	L/Qxx04Ly	2.2 g	Tube	500 (50 per tube)
L/Qxx04DyRP	L/Qxx04Dy	0.3 g	Embossed Carrier	2500
L/Qxx04DyTP	L/Qxx04Dy	0.3 g	Tube Pack	750 (75 per tube)
L/Qxx04VyTP	L/Qxx04Vy	0.4 g	Tube Pack	750 (75 per tube)

Note: xx = Voltage; y = Sensitivity

©2011 Littelfuse, Inc
Specifications are subject to change without notice.
Please refer to http://www.littelfuse.com for current information.

TO-252 Embossed Carrier Reel Pack (RP) Specifications

Meets all EIA-481-2 Standards

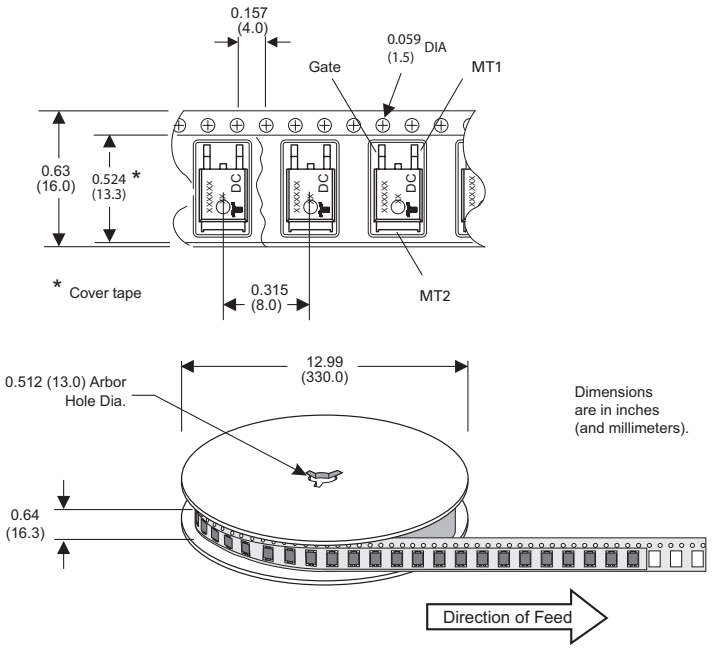

Part Numbering System

Q 60 04 L 4 xx

DEVICE TYPE
L : Sensitive Triac
Q : Standard Triac

VOLTAGE RATING
40 : 400V
60 : 600V
80 : 800V
K0 : 1000V

CURRENT RATING
04 : 4A

LEAD FORM DIMENSIONS
xx : Lead Form Option

SENSITIVITY & TYPE
Sensitive Triac:
3 : 3 mA (QI, II, III, IV)
5 : 5 mA (QI, II, III, IV)
6 : 5 mA (QI, II, III)
10 mA (QIV)
8 : 10 mA (QI, II, III)
20 mA (QIV)
Standard Triac:
3 : 10 mA (QI, II, III)
4 : 25 mA (QI, II, III)

PACKAGE TYPE
L :TO-220 Isolated
R :TO-220 Non-Isolated
V :TO-251 (V-Pak)
D :TO-252 (D-Pak)

Part Marking System

TO-220 AB – (R Package)

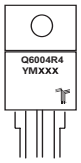

TO-251AA &
TO-252AA
(V and D Packages)

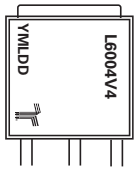

TO-220 AB – (L Package)

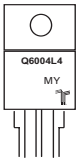

©2011 Littelfuse, Inc
Specifications are subject to change without notice.
Please refer to http://www.littelfuse.com for current information.

OCEAN CHIPS
Океан Электроники
Поставка электронных компонентов

Компания «Океан Электроники» предлагает заключение долгосрочных отношений при поставках импортных электронных компонентов на взаимовыгодных условиях!

Наши преимущества:

- Поставка оригинальных импортных электронных компонентов напрямую с производств Америки, Европы и Азии, а так же с крупнейших складов мира;
- Широкая линейка поставок активных и пассивных импортных электронных компонентов (более 30 млн. наименований);
- Поставка сложных, дефицитных, либо снятых с производства позиций;
- Оперативные сроки поставки под заказ (от 5 рабочих дней);
- Экспресс доставка в любую точку России;
- Помощь Конструкторского Отдела и консультации квалифицированных инженеров;
- Техническая поддержка проекта, помощь в подборе аналогов, поставка прототипов;
- Поставка электронных компонентов под контролем ВП;
- Система менеджмента качества сертифицирована по Международному стандарту ISO 9001;
- При необходимости вся продукция военного и аэрокосмического назначения проходит испытания и сертификацию в лаборатории (по согласованию с заказчиком);
- Поставка специализированных компонентов военного и аэрокосмического уровня качества (Xilinx, Altera, Analog Devices, Intersil, Interpoint, Microsemi, Actel, Aeroflex, Peregrine, VPT, Syfer, Eurofarad, Texas Instruments, MS Kennedy, Miteq, Cobham, E2V, MA-COM, Hittite, Mini-Circuits, General Dynamics и др.);

Компания «Океан Электроники» является официальным дистрибьютором и эксклюзивным представителем в России одного из крупнейших производителей разъемов военного и аэрокосмического назначения «**JONHON**», а так же официальным дистрибьютором и эксклюзивным представителем в России производителя высокотехнологичных и надежных решений для передачи СВЧ сигналов «**FORSTAR**».

AVIC JONHON

«JONHON» (основан в 1970 г.)

Разъемы специального, военного и аэрокосмического назначения:

(Применяются в военной, авиационной, аэрокосмической, морской, железнодорожной, горно- и нефтедобывающей отраслях промышленности)

«FORSTAR» (основан в 1998 г.)

ВЧ соединители, коаксиальные кабели, кабельные сборки и микроволновые компоненты:

(Применяются в телекоммуникациях гражданского и специального назначения, в средствах связи, РЛС, а так же военной, авиационной и аэрокосмической отраслях промышленности).

FORSTAR®

Телефон: 8 (812) 309-75-97 (многоканальный)
Факс: 8 (812) 320-03-32
Электронная почта: ocean@oceanchips.ru
Web: http://oceanchips.ru/
Адрес: 198099, г. Санкт-Петербург, ул. Калинина, д. 2, корп. 4, лит. А