Data Sheet | May 13, 2005 | FN7286.1

Dual Input, High Speed, Dual Channel CCD Driver

The EL7243 dual input, 2-channel driver achieves the same excellent switching performance of the EL7212 family while providing added flexibility. The power package makes this part extremely well suited for high frequency and heavy loads as in CCD applications. The 2-input logic and configuration is applicable to numerous power MOSFET drive circuits. As with other Elantec drivers, the EL7243 is excellent for driving large capacitive loads with minimal delay and switching times. “Shoot-thru” protection and latching circuits can be implemented by simply “cross-coupling” the 2-channels.

Pinout

EL7243
(20-PIN THERMAL SOIC)
TOP VIEW

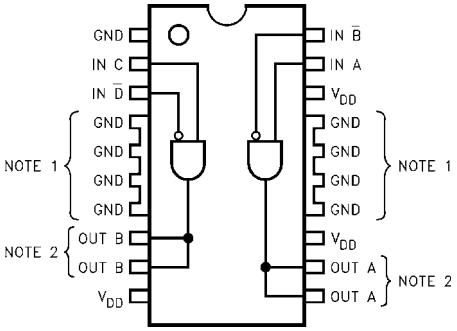

Note 1: Pins 4–7 and 14–17 are electrically connected.
Note 2: Output pins must be tied together.

Manufactured under U.S. Patent Nos. 5,334,883, #5,341,047

Features

- Logic AND/NAND input
- 3V and 5V Input compatible
- Clocking speeds up to 20MHz
- 20ns Switching/delay time
- 2A Peak drive
- Isolated drains
- Low output impedance
- Low quiescent current
- Wide operating voltage — 4.5V to 16V
- Pb-Free available (RoHS compliant)

Applications

- CCD Drivers
- Short circuit protected switching
- Under-voltage shut-down circuits
- Switch-mode power supplies
- Motor controls
- Power MOSFET switching
- Switching capacitive loads
- Shoot-thru protection
- Latching drivers

Ordering Information

PART NUMBER	PACKAGE	TAPE & REEL	PKG. DWG. #
EL7243CM	20-Pin SOIC	-	MDP0027
EL7243CM-T13	20-Pin SOIC	13”	MDP0027
EL7243CMZ (See Note)	20-Pin SOIC (Pb-free)	-	MDP0027
EL7243CMZ-T13 (See Note)	20-Pin SOIC (Pb-free)	13”	MDP0027

NOTE: Intersil Pb-free products employ special Pb-free material sets; molding compounds/die attach materials and 100% matte tin plate termination finish, which are RoHS compliant and compatible with both SnPb and Pb-free soldering operations. Intersil Pb-free products are MSL classified at Pb-free peak reflow temperatures that meet or exceed the Pb-free requirements of IPC/JEDEC J STD-020.

CAUTION: These devices are sensitive to electrostatic discharge; follow proper IC Handling Procedures.
1-888-INTERSIL or 1-888-352-6832 | Intersil (and design) is a registered trademark of Intersil Americas Inc.
Copyright Intersil Americas Inc. 1996, 2003, 2005. All Rights Reserved
All other trademarks mentioned are the property of their respective owners.

Absolute Maximum Ratings (T_A = 25°C)

Supply (V+ to Gnd) 16.5V
Input Pins. . . . . -0.3V to +0.3V above V+
Combined Peak Output Current. 4A
Storage Temperature Range . . . . . .-65°C to +150°C
Ambient Operating Temperature . . . . . .-40°C to +85°C
Operating Junction Temperature . . . . . 125°C
Power Dissipation
20-pin “Batwing” SOIC 1500mW

CAUTION: Stresses above those listed in “Absolute Maximum Ratings” may cause permanent damage to the device. This is a stress only rating and operation of the device at these or any other conditions above those indicated in the operational sections of this specification is not implied.

IMPORTANT NOTE: All parameters having Min/Max specifications are guaranteed. Typical values are for information purposes only. Unless otherwise noted, all tests are at the specified temperature and are pulsed tests, therefore: $T_J = T_C = T_A$

DC Electrical Specifications

T_A = 25°C, V_{DD} = 15V unless otherwise specified

PARAMETER	DESCRIPTION	TEST CONDITIONS	MIN	TYP	MAX	UNITS
INPUT						
V_{IH}	Logic “1” Input Voltage		2.4			V
I_{IH}	Logic “1” Input Current	@V_{DD}		0.1	10	µA
V_{IL}	Logic “0” Input Voltage				0.8	V
I_{IL}	Logic “0” Input Current	@0V		0.1	10	µA
V_{HVS}	Input Hysteresis			0.3		V
OUTPUT						
R_{OH}	Pull-Up Resistance	I_{OUT} = -100mA		3	6	Ω
R_{OL}	Pull-Down Resistance	I_{OUT} = +100mA		4	6	Ω
I_{PK}	Peak Output Current	Source Sink		2 2		A
I_{DC}	Continuous Output Current	Source/Sink	200			mA
POWER SUPPLY						
I_S	Power Supply Current	Inputs High		1	2.5	mA
V_S	Operating Voltage		4.5		16	V

AC Electrical Specifications

T_A = 25°C, V = 15V unless otherwise specified

PARAMETER	DESCRIPTION	TEST CONDITIONS	MIN	TYP	MAX	UNITS
SWITCHING CHARACTERISTICS						
t_R	Rise Time	C_L = 500pF C_L = 1000pF			10 20	ns
t_F	Fall Time	C_L = 500pF C_L = 1000pF			10 20	ns
t_{D-ON}	Turn-On Delay Time			20	25	ns
t_{D-OFF}	Turn-Off Delay Time			20	25	ns

Timing Table

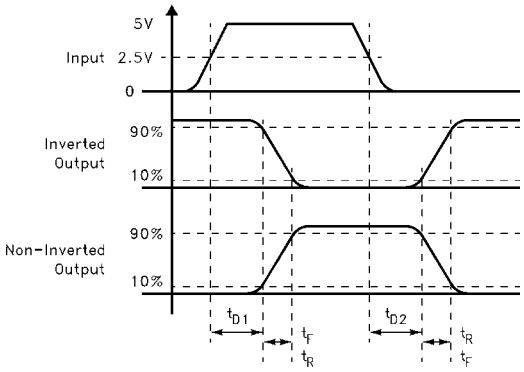

Standard Test Configuration

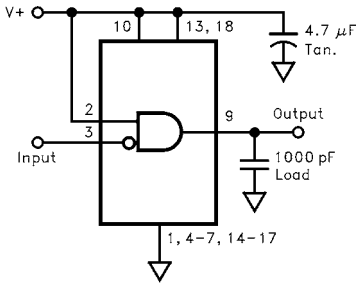

Pins 19, 20 connected to V+

Simplified Schematic

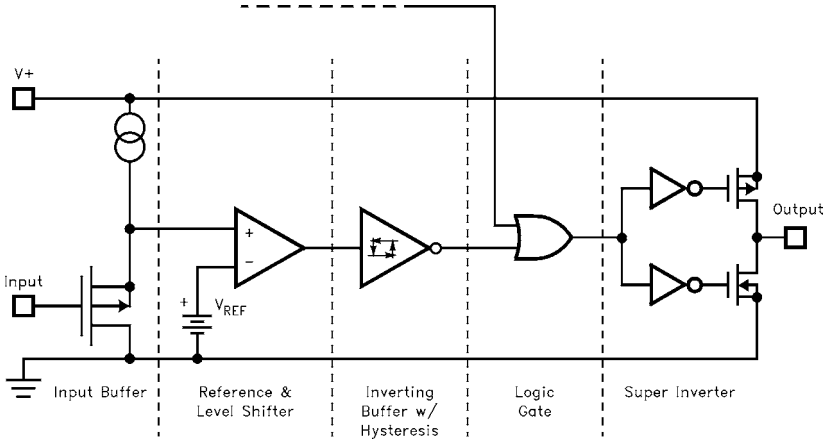

Typical Performance Curves

Max Power/Derating Curves

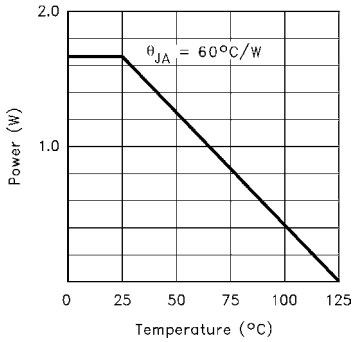

Switch Threshold vs Supply Voltage

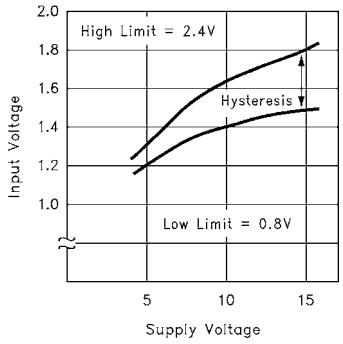

Input Current vs Voltage

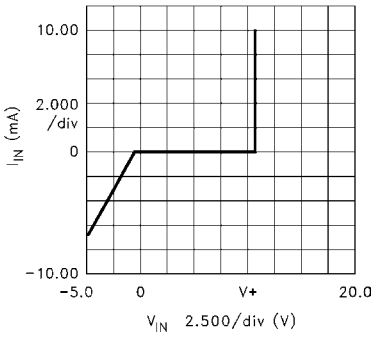

Peak Drive vs Supply Voltage

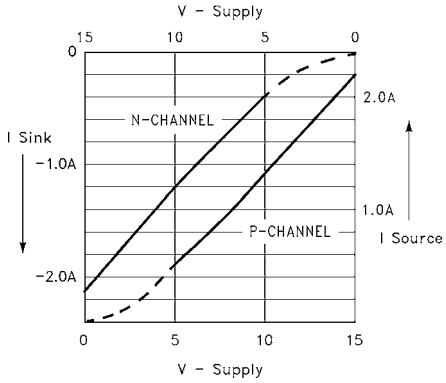

Quiescent Supply Current

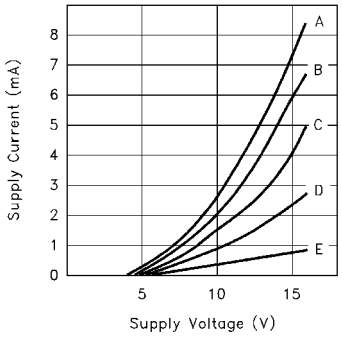

CASE:

A	ALL INPUTS GND
B	3 INPUTS GND
C	2 INPUTS GND
D	1 INPUT GND
E	ALL INPUTS V+

"ON" Resistance vs Supply Voltage

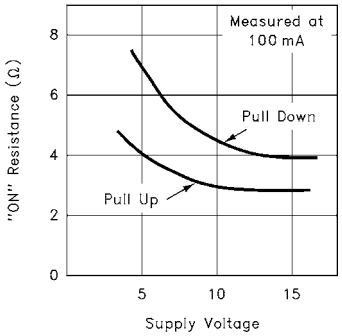

Typical Performance Curves (Continued)

Average Supply Current vs Voltage and Frequency

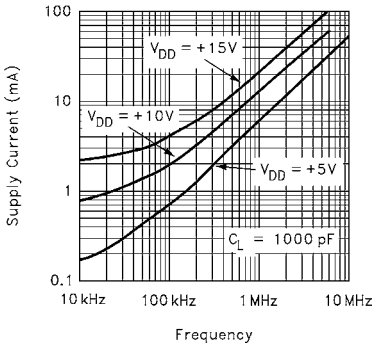

Average Supply Current vs Capacitive Load

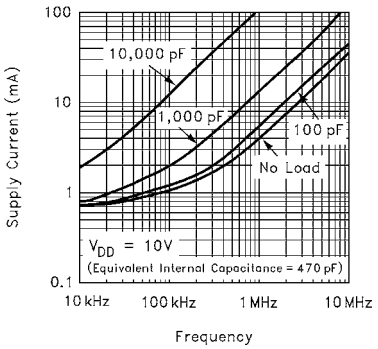

Rise/Fall Time vs Load

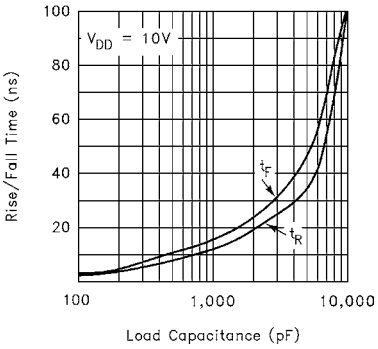

Rise/Fall Time vs Supply Voltage

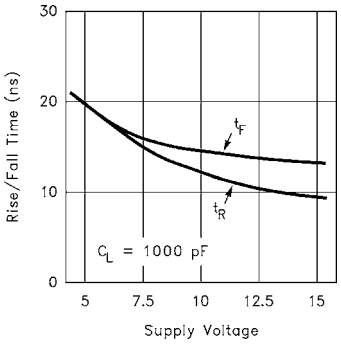

Rise/Fall Time vs Temperature

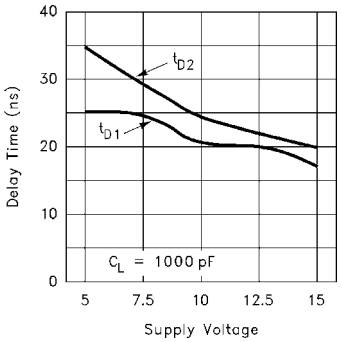

Propagation Delay vs Supply Voltage

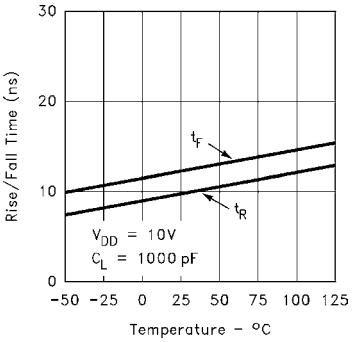

Delay vs Temperature

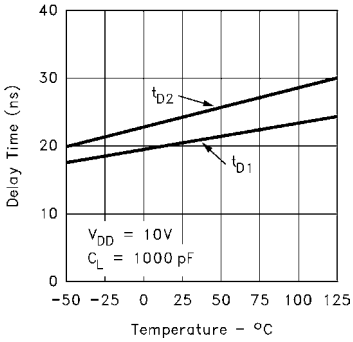

Applications Information

Typical CCD Configuration

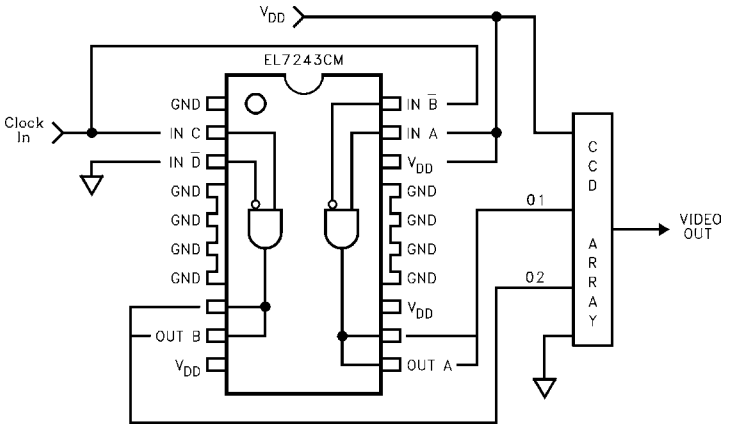

EL7243 Macromodel

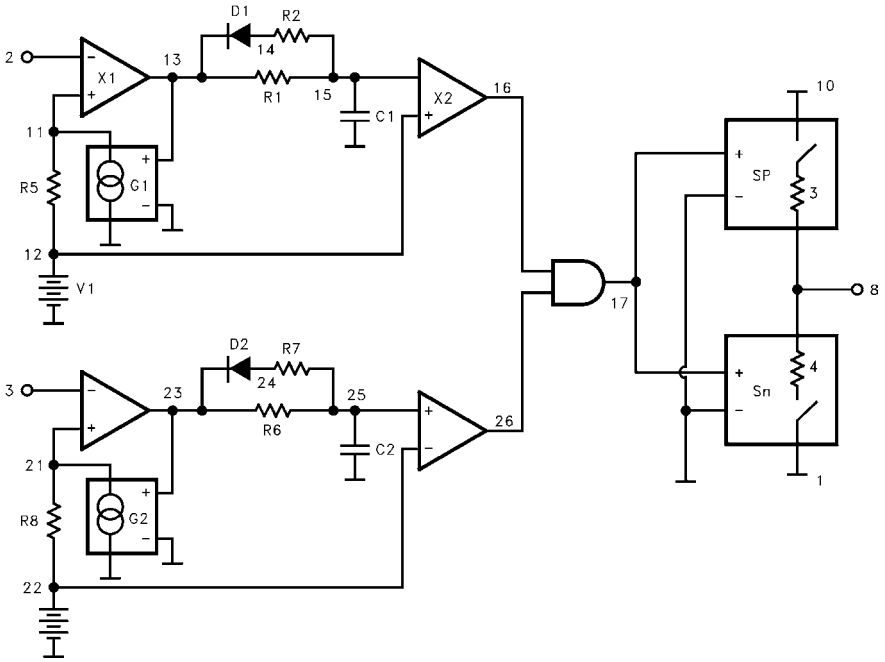

EL7243 Macromodel

```
* EL7243 Macromodel
* Revision A, January 1996
* Connections      Gnd
*                  |    Inp+
*                  |    |    Inp-
*                  |    |    |    out
*                  |    |    |    |    VCC
.subckt M7243      1    2    3    8    10
V1 12 1 1.6
R1 13 15 1k
R2 14 15 5k
R5 11 12 100
C1 15 1 43.3pF
D1 14 13 dmod
X1 13 11 2 1 comp1
X2 16 12 15 1 comp1
V2 22 1 1.6
R6 23 25 1K
R7 24 25 5K
R8 21 22 100
C2 25 1 43.3pF
D2 24 23 dmod
X3 23 21 3 1 comp1
X4 26 25 22 1 comp1
X5 16 26 17 1 And-gate
sp 10 8 17 1 spmod
sn 8 1 17 1 snmod
g1 11 1 13 1 938u
g2 21 1 23 1 938u
.model dmod d
.model spmod vswitch ron=3 roff=2meg von=1 voff=1.5
.model snmod vswitch ron=4 roff=2meg von=3 voff=2
.ends M7243
* AND Gate Subcircuit*
.subckt And-gate inp1 inp2 out-AS Vss-A
el out-A Vss-A table {v(inp1)*v(inp2)} = (0, 3.2) (3.2, 0)
Rout-a out-a vss-a 10 meg
rinpa inp1 vss-a 10 meg
rinpb inp2 vss-a 10 meg
.ends and-gate
* Comparator Subcircuit *
.subckt comp1 out inp inm vss
el out vss table {(v(inp)-v(inm))*5000} = (0,0) (3.2, 3.2)
Rout out vss 10meg
Rinp inp vss 10meg
Rinm inm vss 10meg
.ends omp1
```

All Intersil U.S. products are manufactured, assembled and tested utilizing ISO9000 quality systems.
Intersil Corporation's quality certifications can be viewed at www.intersil.com/design/quality

Intersil products are sold by description only. Intersil Corporation reserves the right to make changes in circuit design, software and/or specifications at any time without notice. Accordingly, the reader is cautioned to verify that data sheets are current before placing orders. Information furnished by Intersil is believed to be accurate and reliable. However, no responsibility is assumed by Intersil or its subsidiaries for its use; nor for any infringements of patents or other rights of third parties which may result from its use. No license is granted by implication or otherwise under any patent or patent rights of Intersil or its subsidiaries.

For information regarding Intersil Corporation and its products, see www.intersil.com

OCEAN CHIPS
Океан Электроники
Поставка электронных компонентов

Компания «Океан Электроники» предлагает заключение долгосрочных отношений при поставках импортных электронных компонентов на взаимовыгодных условиях!

Наши преимущества:

- Поставка оригинальных импортных электронных компонентов напрямую с производств Америки, Европы и Азии, а так же с крупнейших складов мира;
- Широкая линейка поставок активных и пассивных импортных электронных компонентов (более 30 млн. наименований);
- Поставка сложных, дефицитных, либо снятых с производства позиций;
- Оперативные сроки поставки под заказ (от 5 рабочих дней);
- Экспресс доставка в любую точку России;
- Помощь Конструкторского Отдела и консультации квалифицированных инженеров;
- Техническая поддержка проекта, помощь в подборе аналогов, поставка прототипов;
- Поставка электронных компонентов под контролем ВП;
- Система менеджмента качества сертифицирована по Международному стандарту ISO 9001;
- При необходимости вся продукция военного и аэрокосмического назначения проходит испытания и сертификацию в лаборатории (по согласованию с заказчиком);
- Поставка специализированных компонентов военного и аэрокосмического уровня качества (Xilinx, Altera, Analog Devices, Intersil, Interpoint, Microsemi, Actel, Aeroflex, Peregrine, VPT, Syfer, Eurofarad, Texas Instruments, MS Kennedy, Miteq, Cobham, E2V, MA-COM, Hittite, Mini-Circuits, General Dynamics и др.);

Компания «Океан Электроники» является официальным дистрибьютором и эксклюзивным представителем в России одного из крупнейших производителей разъемов военного и аэрокосмического назначения **«JONHON»**, а так же официальным дистрибьютором и эксклюзивным представителем в России производителя высокотехнологичных и надежных решений для передачи СВЧ сигналов **«FORSTAR»**.

AVIC JONHON

«JONHON» (основан в 1970 г.)

Разъемы специального, военного и аэрокосмического назначения:

(Применяются в военной, авиационной, аэрокосмической, морской, железнодорожной, горно- и нефтедобывающей отраслях промышленности)

«FORSTAR» (основан в 1998 г.)

ВЧ соединители, коаксиальные кабели, кабельные сборки и микроволновые компоненты:

(Применяются в телекоммуникациях гражданского и специального назначения, в средствах связи, РЛС, а так же военной, авиационной и аэрокосмической отраслях промышленности).

FORSTAR®

Телефон: 8 (812) 309-75-97 (многоканальный)
Факс: 8 (812) 320-03-32
Электронная почта: ocean@oceanchips.ru
Web: http://oceanchips.ru/
Адрес: 198099, г. Санкт-Петербург, ул. Калинина, д. 2, корп. 4, лит. А