Si500D

DIFFERENTIAL OUTPUT SILICON OSCILLATOR

Features

- Quartz-free, MEMS-free, and PLL-free all-silicon oscillator
- Any output frequencies from 0.9 to 200 MHz
- Short lead times
- Excellent temperature stability (±20 ppm)
- Highly reliable startup and operation
- High immunity to shock and vibration
- Low jitter: <1.5 ps rms
- 0 to 85 °C operation includes 10-year aging in hot environments
- Footprint compatible with industry-standard 3.2 x 5.0 mm XOs
- CMOS, SSTL, LVPECL, LVDS, and HCSL versions available
- Driver stopped, tri-state, or powerdown operation
- RoHS compliant
- 1.8, 2.5, or 3.3 V options
- Low power
- More than 10x better fit rate than competing crystal solutions

Specifications

Parameters	Condition	Min	Typ	Max	Units
Frequency Range		0.9	—	200	MHz
Frequency Stability	Temperature stability, 0 to +70 °C	—	±10	—	ppm
	Temperature stability, 0 to +85 °C	—	±20	—	ppm
	Total stability, 0 to +70 °C operation[1]	—	—	±150	ppm
	Total stability, 0 to +85 °C operation[2]	—	—	±250	ppm
Operating Temperature	Commercial	0	—	70	°C
	Extended commercial	0	—	85	°C
Storage Temperature		–55	—	+125	°C
Supply Voltage	1.8 V option	1.71	—	1.98	V
	2.5 V option	2.25	—	2.75	V
	3.3 V option	2.97	—	3.63	V

Notes:

1. Inclusive of 25 °C initial frequency accuracy, operating temperature range, supply voltage change, output load change, first-year aging at 25 °C, shock, vibration, and one solder reflow.
2. Inclusive of 25 °C initial frequency accuracy, operating temperature range, supply voltage change, output load change, ten-year aging at 85 °C, shock, vibration, and one solder reflow.
3. See “AN409: Output Termination Options for the Si500S and Si500D Silicon Oscillators” for further details regarding output clock termination recommendations.
4. $V_{TT} = .5 \times V_{DD}$.
5. $V_{TT} = .45 \times V_{DD}$.

Copyright © 2011 by Silicon Laboratories

Parameters	Condition	Min	Typ	Max	Units
Supply Current	LVPECL	—	34.0	36.0	mA
	Low Power LVPECL	—	19.3	22.2	mA
	LVDS	—	14.9	16.5	mA
	HCSL	—	25.3	29.3	mA
	Differential CMOS(3.3 V option, 10 pF on each output, 200 MHz)	—	33	36	mA
	Differential CMOS(3.3 V option, 1 pFon each output, 40 MHz)	—	16	—	mA
	Differential SSTL-3.3	—	24.5	27.7	mA
	Differential SSTL-2.5	—	24.3	26.7	mA
	Differential SSTL-1.8	—	22.2	25	mA
	Tri-State	—	9.7	10.7	mA
	Powerdown	—	1.0	1.9	mA
Output Symmetry	V_{DIFF} = 0	46 – 13 ns/T_{CLK}	—	54 + 13 ns/T_{CLK}	%
Rise and Fall Times (20/80%)[3]	LVPECL/LVDS	—	—	460	ps
	HCSL/Differential SSTL	—	—	800	ps
	Differential CMOS, 15 pF, ≥80 MHz	—	1.1	1.6	ns
LVPECL Output Option (DC coupling, 50 Ω to V_{DD} – 2.0 V)[3]	Mid-level	V_{DD} – 1.5	—	V_{DD} – 1.34	V
	Diff swing	.720	—	.880	V_{PK}
Low Power LVPECL Output Option (AC coupling, 100 Ω Differential Load)[3]	Mid-level	—	N/A	—	V
	Diff swing	.68	—	.95	V_{PK}
LVDS Output Option (2.5/3.3 V) (R_{TERM} = 100 Ω diff)[3]	Mid-level	1.15	—	1.26	V
	Diff swing	0.25	—	0.45	V_{PK}
LVDS Output Option (1.8 V) (R_{TERM} = 100 Ω diff)[3]	Mid-level	0.85	—	0.96	V
	Diff swing	0.25	—	0.45	V_{PK}
HCSL Output Option[3]	Mid-level	0.35	—	0.425	V
	Diff swing	0.65	—	0.82	V_{PK}
	DC termination per pad	45	—	55	Ω
CMOS Output Voltage[3]	V_{OH}, sourcing 9 mA	V_{DD} – 0.6	—	—	V
	V_{OL}, sinking 9 mA	—	—	0.6	V
SSTL-1.8 Output Voltage[4]	V_{OH}	V_{TT} + 0.375	—	—	V
	V_{OL}	—	—	V_{TT} – 0.375	
SSTL-2.5 Output Voltage[4]	V_{OH}	V_{TT} + 0.48	—	—	V
	V_{OL}	—	—	V_{TT} – 0.48	
SSTL-3.3 Output Voltage[5]	V_{OH}	V_{TT} + 0.48	—	—	V
	V_{OL}	—	—	V_{TT} – 0.48	
Powerup Time	From time V_{DD} crosses min spec supply	—	—	2	ms
OE Deassertion to Clk Stop		—	—	250 + 3 x T_{CLK}	ns
Return from Output Driver Stopped Mode		—	—	250 + 3 x T_{CLK}	ns
Return From Tri-State Time		—	—	12 + 3 x T_{CLK}	µs

Notes:

1. Inclusive of 25 °C initial frequency accuracy, operating temperature range, supply voltage change, output load change, first-year aging at 25 °C, shock, vibration, and one solder reflow.
2. Inclusive of 25 °C initial frequency accuracy, operating temperature range, supply voltage change, output load change, ten-year aging at 85 °C, shock, vibration, and one solder reflow.
3. See “AN409: Output Termination Options for the Si500S and Si500D Silicon Oscillators” for further details regarding output clock termination recommendations.
4. V_{TT} = .5 x V_{DD}.
5. V_{TT} = .45 x V_{DD}.

Parameters	Condition	Min	Typ	Max	Units
Return From Powerdown Time		—	—	2	ms
Period Jitter (1-sigma)	Non-CMOS	—	1	2	ps RMS
	CMOS, C_L = 7 pF	—	1	3	ps RMS
Integrated Phase Jitter	1.0 MHz – min(20 MHz, 0.4 x F_{OUT}),non-CMOS	—	0.6	1	ps RMS
	1.0 MHz – min(20 MHz, 0.4 x F_{OUT}),CMOS format	—	0.7	1.5	ps RMS

Notes:

1. Inclusive of 25 °C initial frequency accuracy, operating temperature range, supply voltage change, output load change, first-year aging at 25 °C, shock, vibration, and one solder reflow.
2. Inclusive of 25 °C initial frequency accuracy, operating temperature range, supply voltage change, output load change, ten-year aging at 85 °C, shock, vibration, and one solder reflow.
3. See “AN409: Output Termination Options for the Si500S and Si500D Silicon Oscillators” for further details regarding output clock termination recommendations.
4. V_{TT} = .5 x V_{DD}.
5. V_{TT} = .45 x V_{DD}.

Package Specifications

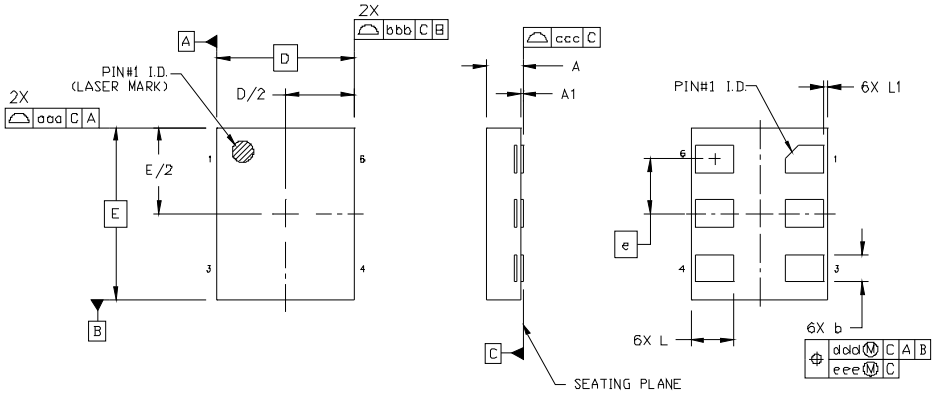

Table 1. Package Diagram Dimensions (mm)

Dimension	Min	Nom	Max
A	0.80	0.85	0.90
A1	0.00	0.03	0.05
b	0.59	0.64	0.69
D	3.20 BSC.		
e	1.27 BSC.		
E	4.00 BSC.		
L	0.95	1.00	1.05

Dimension	Min	Nom	Max
L1	0.00	0.05	0.10
aaa	—	—	0.10
bbb	—	—	0.10
ccc	—	—	0.08
ddd	—	—	0.10
eee	—	—	0.05

Table 2. Pad Connections

1	OE
2	NC—Make no external connection to this pin
3	GND
4	Output
5	Complementary Output
6	VDD

Table 3. Tri-State/Powerdown/Driver Stopped Function on OE (3rd Option Code)

	A	B	C	D	E	F
Open	Active	Active	Active	Active	Active	Active
1 Level	Active	Tri-State	Active	Power-down	Active	Driver Stopped
0 Level	Tri-State	Active	Power-down	Active	Driver Stopped	Active

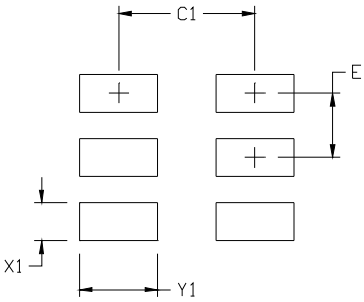

Dimension	(mm)
C1	2.70
E	1.27
X1	0.75
Y1	1.55

Figure 1. Recommended Land Pattern

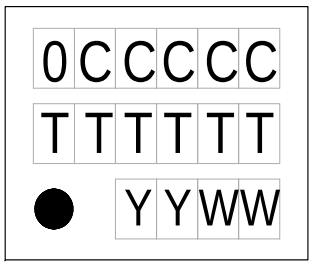

0 = Si500
CCCCC = mark code
TTTTTT = assembly manufacturing code
YY = year
WW = work week

Figure 2. Top Mark

Environmental Compliance

Parameter	Conditions/Test Method
Mechanical Shock	MIL-STD-883, Method 2002.4
Mechanical Vibration	MIL-STD-883, Method 2007.3 A
Resistance to Soldering Heat	MIL-STD-202, 260 C° for 8 seconds
Solderability	MIL-STD-883, Method 2003.8
Damp Heat	IEC 68-2-3
Moisture Sensitivity Level	J-STD-020, MSL 3

Ordering Information

The Si500D supports a variety of options including frequency, output format, supply voltage, and tri-state/powerdown. Specific device configurations are programmed into the Si500D at time of shipment. Configurations are specified using the figure below. Silicon Labs provides a web-based part number utility that can be used to simplify part number configuration. Refer to www.silabs.com/SiliconXOPartnumber to access this tool. The Si500D XO series is supplied in a ROHS-compliant, Pb-free, 6-pad, 3.2 x 4.0 mm package. Tape and reel packaging is available as an ordering option.

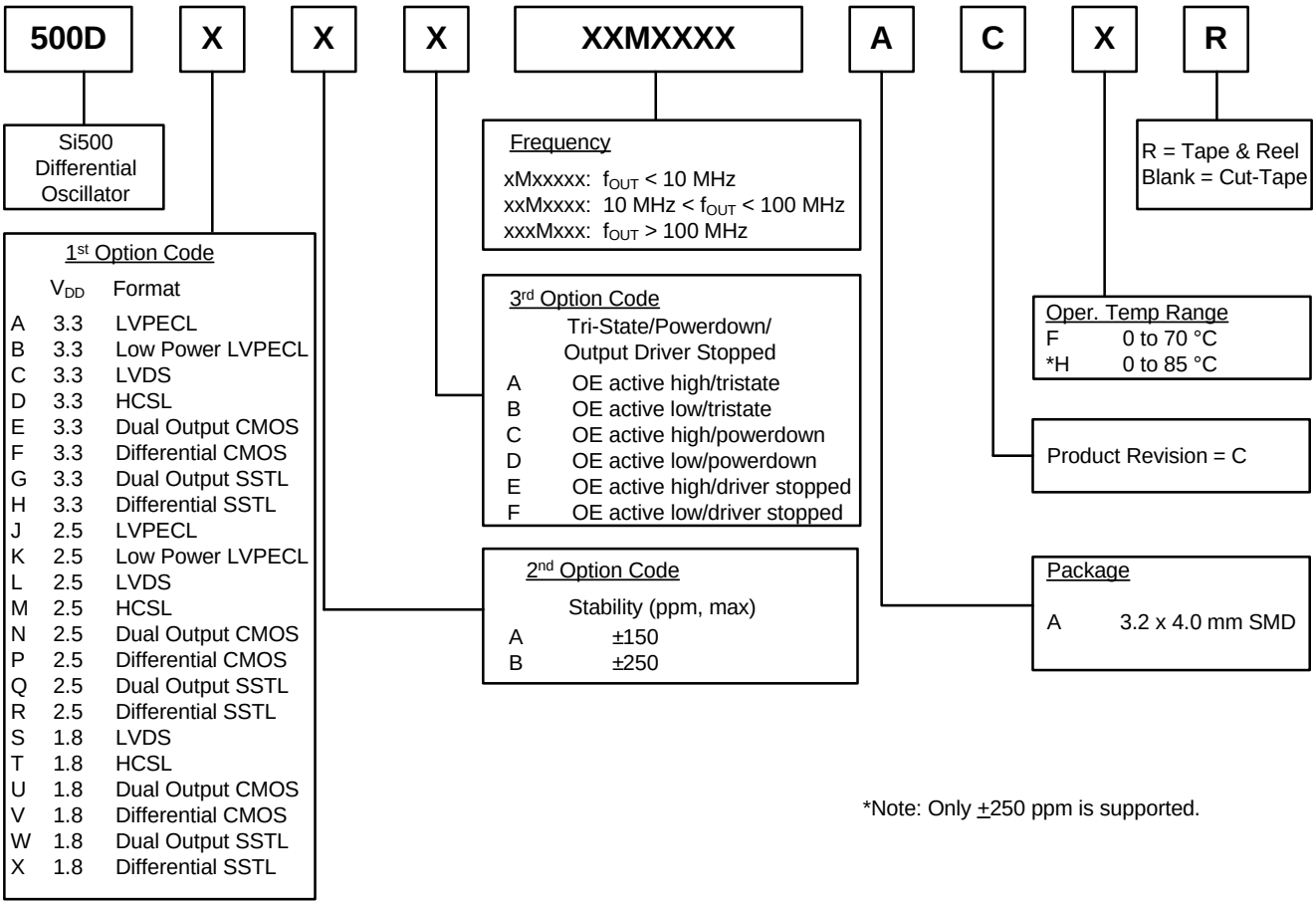

DOCUMENT CHANGE LIST

Revision 0.2 to Revision 0.3

- Revision B to Revision C updated in Ordering Information
- 0 to 85 C° Operating Temperature Range option added

Revision 0.3 to Revision 1.0

- Clarified SSTL specifications.
- Revised Differential CMOS supply current values.
- Clarified Differential CMOS supply current loading conditions.

Revision 1.0 to Revision 1.1

- Updated Ordering information for ±250 ppm from 0 to +85 °C.
- Updated jitter from 1.5 ps to 1.5 ps rms.
- Updated operating temperature to include extended commercial at 0 to +85 °C.
- Updated features to include LVPECL, LVDS, and HCSL.

ClockBuilder Pro

One-click access to Timing tools, documentation, software, source code libraries & more. Available for Windows and iOS (CBGo only).

www.silabs.com/CBPro

Timing Portfolio
www.silabs.com/timing

SW/HW
www.silabs.com/CBPro

Quality
www.silabs.com/quality

Support and Community
community.silabs.com

Disclaimer
Silicon Labs intends to provide customers with the latest, accurate, and in-depth documentation of all peripherals and modules available for system and software implementers using or intending to use the Silicon Labs products. Characterization data, available modules and peripherals, memory sizes and memory addresses refer to each specific device, and "Typical" parameters provided can and do vary in different applications. Application examples described herein are for illustrative purposes only. Silicon Labs reserves the right to make changes without further notice to the product information, specifications, and descriptions herein, and does not give warranties as to the accuracy or completeness of the included information. Without prior notification, Silicon Labs may update product firmware during the manufacturing process for security or reliability reasons. Such changes will not alter the specifications or the performance of the product. Silicon Labs shall have no liability for the consequences of use of the information supplied in this document. This document does not imply or expressly grant any license to design or fabricate any integrated circuits. The products are not designed or authorized to be used within any FDA Class III devices, applications for which FDA premarket approval is required or Life Support Systems without the specific written consent of Silicon Labs. A "Life Support System" is any product or system intended to support or sustain life and/or health, which, if it fails, can be reasonably expected to result in significant personal injury or death. Silicon Labs products are not designed or authorized for military applications. Silicon Labs products shall under no circumstances be used in weapons of mass destruction including (but not limited to) nuclear, biological or chemical weapons, or missiles capable of delivering such weapons. Silicon Labs disclaims all express and implied warranties and shall not be responsible or liable for any injuries or damages related to use of a Silicon Labs product in such unauthorized applications.

Trademark Information
Silicon Laboratories Inc.® , Silicon Laboratories®, Silicon Labs®, SiLabs® and the Silicon Labs logo®, Bluegiga®, Bluegiga Logo®, ClockBuilder®, CMEMS®, DSPLL®, EFM®, EFM32®, EFR, Ember®, Energy Micro, Energy Micro logo and combinations thereof, "the world's most energy friendly microcontrollers", Ember®, EZLink®, EZRadio®, EZRadioPRO®, Gecko®, Gecko OS, Gecko OS Studio, ISOmodem®, Precision32®, ProSLIC®, Simplicity Studio®, SiPHY®, Telegesis, the Telegesis Logo®, USBXpress® , Zentri, the Zentri logo and Zentri DMS, Z-Wave®, and others are trademarks or registered trademarks of Silicon Labs. ARM, CORTEX, Cortex-M3 and THUMB are trademarks or registered trademarks of ARM Holdings. Keil is a registered trademark of ARM Limited. Wi-Fi is a registered trademark of the Wi-Fi Alliance. All other products or brand names mentioned herein are trademarks of their respective holders.

Silicon Laboratories Inc.
400 West Cesar Chavez
Austin, TX 78701
USA

http://www.silabs.com

OCEAN CHIPS
Океан Электроники
Поставка электронных компонентов

Компания «Океан Электроники» предлагает заключение долгосрочных отношений при поставках импортных электронных компонентов на взаимовыгодных условиях!

Наши преимущества:

- Поставка оригинальных импортных электронных компонентов напрямую с производств Америки, Европы и Азии, а так же с крупнейших складов мира;
- Широкая линейка поставок активных и пассивных импортных электронных компонентов (более 30 млн. наименований);
- Поставка сложных, дефицитных, либо снятых с производства позиций;
- Оперативные сроки поставки под заказ (от 5 рабочих дней);
- Экспресс доставка в любую точку России;
- Помощь Конструкторского Отдела и консультации квалифицированных инженеров;
- Техническая поддержка проекта, помощь в подборе аналогов, поставка прототипов;
- Поставка электронных компонентов под контролем ВП;
- Система менеджмента качества сертифицирована по Международному стандарту ISO 9001;
- При необходимости вся продукция военного и аэрокосмического назначения проходит испытания и сертификацию в лаборатории (по согласованию с заказчиком);
- Поставка специализированных компонентов военного и аэрокосмического уровня качества (Xilinx, Altera, Analog Devices, Intersil, Interpoint, Microsemi, Actel, Aeroflex, Peregrine, VPT, Syfer, Eurofarad, Texas Instruments, MS Kennedy, Miteq, Cobham, E2V, MA-COM, Hittite, Mini-Circuits, General Dynamics и др.);

Компания «Океан Электроники» является официальным дистрибьютором и эксклюзивным представителем в России одного из крупнейших производителей разъемов военного и аэрокосмического назначения **«JONHON»**, а так же официальным дистрибьютором и эксклюзивным представителем в России производителя высокотехнологичных и надежных решений для передачи СВЧ сигналов **«FORSTAR»**.

AVIC JONHON

«JONHON» (основан в 1970 г.)

Разъемы специального, военного и аэрокосмического назначения:

(Применяются в военной, авиационной, аэрокосмической, морской, железнодорожной, горно- и нефтедобывающей отраслях промышленности)

«FORSTAR» (основан в 1998 г.)

ВЧ соединители, коаксиальные кабели, кабельные сборки и микроволновые компоненты:

(Применяются в телекоммуникациях гражданского и специального назначения, в средствах связи, РЛС, а так же военной, авиационной и аэрокосмической отраслях промышленности).

FORSTAR®

Телефон: 8 (812) 309-75-97 (многоканальный)
Факс: 8 (812) 320-03-32
Электронная почта: ocean@oceanchips.ru
Web: http://oceanchips.ru/
Адрес: 198099, г. Санкт-Петербург, ул. Калинина, д. 2, корп. 4, лит. А