ABP SERIES

32305128
Issue F

Basic Board Mount Pressure Sensors

High Accuracy, Compensated/Amplified
60 mbar to 10 bar | 6 kPa to 1 MPa | 1 psi to 150 psi
Digital or Analog Output, Liquid Media Capable

DESCRIPTION

The ABP Series are piezoresistive silicon pressure sensors offering a ratiometric analog or digital output for reading pressure over the specified full scale pressure span and temperature range. They are calibrated and temperature compensated for sensor offset, sensitivity, temperature effects and accuracy errors (which include non-linearity, repeatability and hysteresis) using an on-board Application Specific Integrated Circuit (ASIC). Calibrated output values for pressure are updated at approximately 1 kHz for analog and 2 kHz for digital. All products are designed and manufactured according to ISO 9001 standards.

- Dry gases option: The input port is limited to non-corrosive, non-ionic media (e.g., dry air, gases) and should not be exposed to condensation. The gases are limited to media compatible with high temperature polyamide, silicone, alumina ceramic, silicon, gold, and glass.
- Liquid media option: Includes an additional silicone-based gel coating to protect the electronics under port P1, which enables use with non-corrosive liquids (e.g. water and saline) and in applications where condensation can occur. Since port P2 is designed for use with non-corrosive liquids, this option is often suitable for wet-wet differential sensing.

DIFFERENTIATION

- Enhanced accuracy helps the design engineer fully understand the error in measurement.
- Wide supply voltage range offers design flexibility.
- Power consumption when utilizing sleep mode option allows for use in battery-powered applications.

VALUE TO CUSTOMERS

- Simplifies design-in: Small size saves room on the PC board (PCB), or simplifies design in smaller and lower power devices. Meets Moisture Sensitivity Level 1 requirements, which allows for unlimited shelf life when stored at <30 °C/85 %RH and, under most storage conditions, allows for PCB soldering without any material concern about solder joint quality due to aging of the sensor terminals, which minimizes the concern about aging of the terminals prior PCB assembly. Pressure choices allow engineers to select range required for their application. Leadless SMT, SMT, and DIP package options.
- Cost-effective: Small size helps engineers reduce design and manufacturing costs while maintaining enhanced performance and reliability of the systems they design.
- Accurate: Total Error Band (TEB) and wide pressure range enable engineers to optimize system performance by improving resolution and system accuracy. Optional internal diagnostics validate that the sensor readings are correct.
- Flexible: Supply voltage range, variety of pressure units, types, and ranges, output options, and wide operating temperature range simplify use in the application.
- Versatile: Wet-media compatibility, sleep mode, and temperature output options make the sensor a versatile choice for Internet of Things applications.
- Honeywell Brand: Utilize proprietary Honeywell technology, and are protected by multiple global patents.

POTENTIAL APPLICATIONS

- **Medical:** CPAP, blood analysis, blood pressure monitoring, breast pumps, drug dosing, hospital beds, massage machines, oxygen concentrators, patient monitoring, sleep apnea equipment, urine analyzers, ventilators/portable ventilators, and wound therapy
- **Industrial:** Air brakes, HVAC/transmitters, life sciences, material handling, pneumatic control and regulation, process gas monitoring, and valve positioning/positioners
- **Commercial:** Air beds, coffee makers, and washing machines

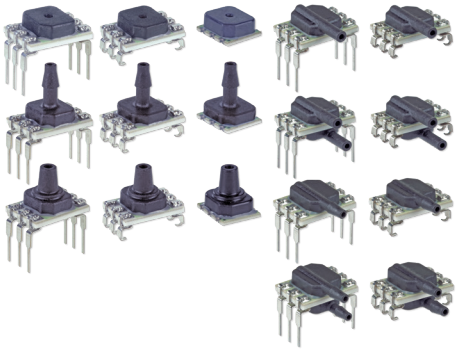

FEATURES

- Measures gage and differential pressures
- Total Error Band (see Figure 1): ±1.5 %FSS
- Liquid media option: Allows for wet/wet operation on dual ported devices
- Industry-leading long-term stability: ±0.25 %FSS
- Industry-leading accuracy: ±0.25 %FSS BFSL
- Wide pressure range: 60 mbar to 10 bar | 6 kPa to 1 MPa | 1 psi to 150 psi
- As small as 8 mm x 7 mm
- High burst pressures (see Table 7)
- Calibrated over temperature range of 0°C to 50°C [32°F to 122°F]
- Operates from a single power supply of either 3.3 Vdc or 5.0 Vdc
- Output: Ratiometric analog or I^2C- or SPI-compatible 12-bit digital
- Power consumption: 2 uA typical when utilizing sleep mode option
- Meet IPC/JEDEC J-STD-020D.1 Moisture Sensitivity Level 1 requirements
- REACH and RoHS compliant
- Options: Internal diagnostic function, liquid media, sleep mode, temperature output

PORTFOLIO

Honeywell offers a variety of board mount pressure sensors for potential use in medical and industrial applications. To view the entire product portfolio, click here.

Honeywell

FIGURE 1. TOTAL ERROR BAND

Total Error Band (TEB) is a single specification that includes all possible sources of error. TEB should not be confused with accuracy, which is actually a component of TEB. TEB is the worst error that the sensor could experience. The TEB specification on a datasheet may be confusing. Honeywell uses the TEB specification in its datasheet because it is the most comprehensive measurement of a sensor's true accuracy. Honeywell also provides the accuracy specification in order to provide a common comparison with competitors' literature that does not use the TEB specification. Many competitors do not use TEB—they simply specify the accuracy of their device. Their accuracy specification, however, may exclude certain parameters. On their datasheet, the errors are listed individually. When combined, the total error (or what would be TEB) can be significant.

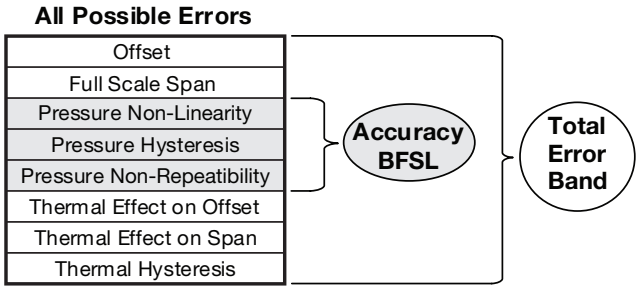

TABLE 1. ABSOLUTE MAXIMUM RATINGS[1]

CHARACTERISTIC	MIN.	MAX.	UNIT
Supply voltage (V_{supply})	-0.3	6.0	Vdc
Voltage on any pin	-0.3	V_{supply} + 0.3	V
Digital interface clock frequency: I^2C SPI	 100 50	 400 800	kHz
ESD susceptibility (human body model)	2	—	kV
Storage temperature	-40 [-40]	85 [185]	°C [°F]
Soldering time and temperature: lead solder temperature (DIP) peak reflow temperature (Leadless SMT, SMT)	 4 s max. at 250°C [482°F] 15 s max. at 250°C [482°F]		

[1]Absolute maximum ratings are the extreme limits the device will withstand without damage.

TABLE 2. ENVIRONMENTAL SPECIFICATIONS

CHARACTERISTIC	PARAMETER
Humidity: all external surfaces internal surfaces of Liquid Media Option (T, V, F, G) internal surfaces of Dry Gases Option (N, D)	 0 %RH to 95 %RH, non-condensing 0 %RH to 100 %RH, condensing 0 %RH to 95 %RH, non-condensing
Vibration	15 g, 10 Hz to 2 kHz
Shock	100 g, 6 ms duration
Life[1]	1 million pressure cycles minimum
Solder reflow	J-STD-020-D.1 Moisture Sensitivity Level 1 (unlimited shelf life when stored at ≤30°C/85 %RH)

[1]Life may vary depending on specific application in which the sensor is used.

TABLE 3. WETTED MATERIALS[1]

COMPONENT	PRESSURE PORT 1 (P1)		PRESSURE PORT 2 (P2)
	DRY GAS OPTION	LIQUID MEDIA OPTION	
Ports and covers	high temperature polyamide		
Substrate	alumina ceramic	—	alumina ceramic
Adhesives	epoxy, silicone	epoxy, silicone gel	epoxy, silicone
Electronic components	silicon, glass, solder, gold, aluminum	304 SST	silicon

[1]Contact Honeywell Customer Service for detailed material information.

TABLE 4. SENSOR PRESSURE TYPES

PRESSURE TYPE	DESCRIPTION
Gage	Output is proportional to the difference between applied pressure and atmospheric (ambient) pressure.
Differential	Output is proportional to the difference between the pressures applied to each port (Port 1 – Port 2).

TABLE 5. OPERATING SPECIFICATIONS

CHARACTERISTIC	ANALOG			DIGITAL			UNIT
	MIN.	TYP.	MAX.	MIN.	TYP.	MAX.	
Supply voltage (V_{supply}):[1, 2, 3]							
3.3 Vdc	3.0	3.3	3.6	3.0	3.3	3.6	Vdc
5.0 Vdc	4.75	5.0	5.25	4.75	5.0	5.25	
Supply current:							
3.3 Vdc	—	2.1	2.8	—	3.1	3.9	mA
5.0 Vdc	—	2.7	3.8	—	3.7	4.6	mA
sleep mode option	—	—	—	—	1	10	uA
Operating temperature range[4]	-40 [-40]	—	85 [185]	-40 [-40]	—	85 [185]	°C [°F]
Compensated temperature range[5]	0 [-32]	—	50 [122]	0 [-32]	—	50 [122]	°C [°F]
Temperature output option[6]	—	—	—	—	±4	—	°C
Startup time (power up to data ready)	—	—	5	—	—	3	ms
Response time	—	1	—	—	0.46	—	ms
Clipping limit:							
upper	—	—	97.5	—	—	—	%Vsupply
lower	2.5	—	—	—	—	—	
I^2C/SPI voltage level:							
low	—	—	—	—	—	20	%Vsupply
high	—	—	—	80	—	—	
Pull up on SDA/MISO, SCL/SCLK, SS	—	—	—	1	—	—	kOhm
Total Error Band[7]	—	—	±1.5	—	—	±1.5	%FSS[8]
Accuracy[9]	—	—	±0.25	—	—	±0.25	%FSS BFSL
Long term stability (1000 hr, 25°C [77°F])	—	—	±0.25	—	—	±0.25	%FSS
Output resolution	0.03	—	—	—	—	—	%FSS
	—	—	—	12	—	—	bits

[1]Sensors are either 3.3 Vdc or 5.0 Vdc based on the catalog listing selected.

[2]Ratiometricity of the sensor (the ability of the device output to scale to the supply voltage) is achieved within the specified operating voltage.

[3]The sensor is not reverse polarity protected. Incorrect application of supply voltage or ground to the wrong pin may cause electrical failure.

[4]Operating temperature range: The temperature range over which the sensor will produce an output proportional to pressure.

[5]Compensated temperature range: The temperature range over which the sensor will produce an output proportional to pressure within the specified performance limits.

[6]Temperature output option: Typical temperature output error over the compensated temperature range of 0°C to 50°C. Operation in Sleep Mode may affect temperature output error depending on duty cycle.

[7]Total Error Band: The maximum deviation from the ideal transfer function over the entire compensated temperature and pressure range. Includes all errors due to offset, full scale span, pressure non-linearity, pressure hysteresis, repeatability, thermal effect on offset, thermal effect on span, and thermal hysteresis.

[8]Full Scale Span (FSS): The algebraic difference between the output signal measured at the maximum (Pmax.) and minimum (Pmin.) limits of the pressure range. (See Figure 2.)

[9]Accuracy: The maximum deviation in output from a Best Fit Straight Line (BFSL) fitted to the output measured over the pressure range at 25°C [77°F]. Includes all errors due to pressure non-linearity, pressure hysteresis, and non-repeatability.

TABLE 6. SENSOR OUTPUT AT SIGNIFICANT PERCENTAGES (DIGITAL VERSIONS ONLY)

% OUTPUT	DIGITAL COUNTS	
	DECIMAL	HEX
0	0	0x0000
10	1638	0x0666
50	8192	0x2000
90	14746	0x399A
100	16383	0x3FFF

FIGURE 2. TRANSFER FUNCTION LIMITS[1]

Analog Versions

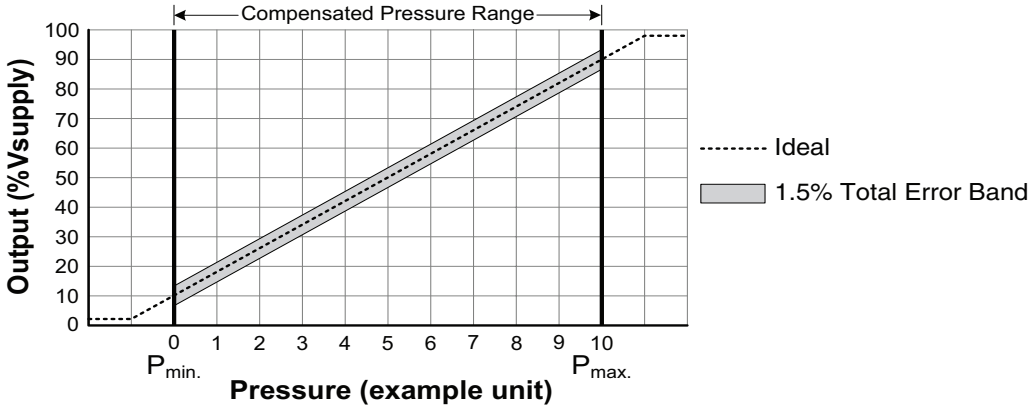

$$\text{Output (V)} = \frac{0.8 \times \text{Vsupply}}{P_{max.} - P_{min.}} \times (\text{Pressure}_{applied} - P_{min.}) + 0.10 \times \text{Vsupply}$$

Digital Versions

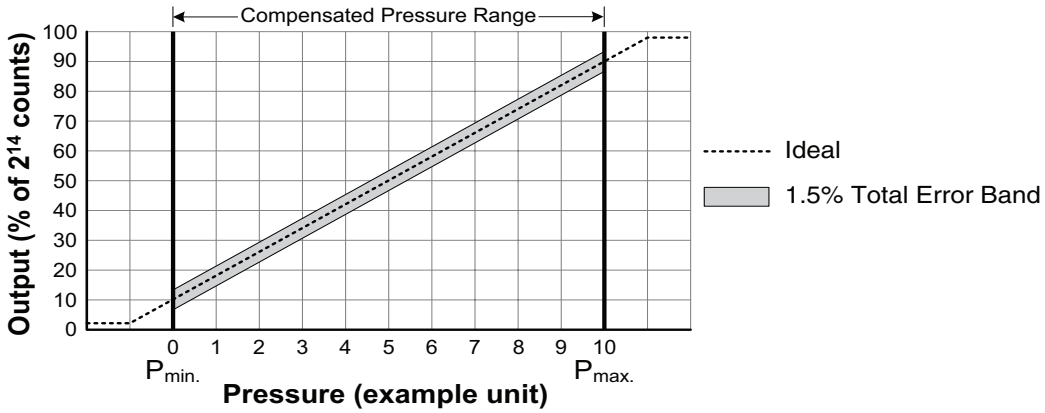

$$\text{Output (\% of } 2^{14} \text{ counts)} = \frac{80\%}{P_{max.} - P_{min.}} \times (\text{Pressure}_{applied} - P_{min.}) + 10\%$$

[1]Transfer Function "A" is shown. See Figure 3 for other available transfer functions.

FIGURE 3. NOMENCLATURE AND ORDER GUIDE

For example, **ABPDNNN150PGAA3** defines an ABP Series Amplified Basic Pressure Sensor, DIP package, NN pressure port, dry gases only, no diagnostics,150 psi gage pressure range, analog output type, 10% to 90% of Vsupply (analog), transfer function, no temperature output, no sleep mode, 3.3 Vdc supply voltage.

ABP D NN N 150PG A A 3

Product Series

ABP	Amplified Basic

Package

D	DIP (Dual Inline Pin)
M	SMT (Surface Mount Technology)
L	Leadless SMT

Pressure Port

DIP	SMT	Leadless SMT
NN No port	NN No port	NN No port
AN Single axial barbed port	AN Single axial barbed port	AN Single axial barbed port
LN Single axial barbless port	LN Single axial barbless port	LN Single axial barbless port
JN Single radial barbless port	JN Single radial barbless port	—
JJ Dual radial barbless ports, same side	JJ Dual radial barbless ports, same side	—
RN Single radial barbed port	RN Single radial barbed port	—
RR Dual radial barbed ports, same side	RR Dual radial barbed ports, same side	—

Supply Voltage

3	3.3 Vdc
5	5.0 Vdc

Transfer Function[3]

A	10% to 90% of Vsupply (analog), 2^{14} counts (digital) no temperature output, no sleep mode
D	10% to 90% of 2^{14} counts (digital only) temperature output enabled, sleep mode enabled
S	10% to 90% of 2^{14} counts (digital only) no temperature output, sleep mode enabled
T	10% to 90% of 2^{14} counts (digital only) temperature output enabled, no sleep mode

Output Type

A	Analog	3	I^2C, Address 0x38
S	SPI	4	I^2C, Address 0x48
0	I^2C, Address 0x08	5	I^2C, Address 0x58
1	I^2C, Address 0x18	6	I^2C, Address 0x68
2	I^2C, Address 0x28	7	I^2C, Address 0x78

Pressure Range[1, 2]

60 mbar to 10 bar Differential		6 kPa to 1 MPa Differential		1 psi to 150 psi Differential	
060MD	±60 mbar	006KD	±6 kPa	001PD	±1 psi
100MD	±100 mbar	010KD	±10 kPa	005PD	±5 psi
160MD	±160 mbar	016KD	±16 kPa	015PD	±15 psi
250MD	±250 mbar	025KD	±25 kPa	030PD	±30 psi
400MD	±400 mbar	040KD	±40 kPa	060PD	±60 psi
600MD	±600 mbar	060KD	±60 kPa		
001BD	±1 bar	100KD	±100 kPa		
1.6BD	±1.6 bar	160KD	±160 kPa		
2.5BD	±2.5 bar	250KD	±250 kPa		
004BD	±4 bar	400KD	±400 kPa		
Gage		**Gage**		**Gage**	
060MG	0 mbar to 60 mbar	006KG	0 kPa to 6 kPa	001PG	0 psi to 1 psi
100MG	0 mbar to 100 mbar	010KG	0 kPa to 10 kPa	005PG	0 psi to 5 psi
160MG	0 mbar to 160 mbar	016KG	0 kPa to 16 kPa	015PG	0 psi to 15 psi
250MG	0 mbar to 250 mbar	025KG	0 kPa to 25 kPa	030PG	0 psi to 30 psi
400MG	0 bar to 400 mbar	040KG	0 kPa to 40 kPa	060PG	0 psi to 60 psi
600MG	0 bar to 600 mbar	060KG	0 kPa to 60 kPa	100PG	0 psi to 100 psi
001BG	0 bar to 1 bar	100KG	0 kPa to 100 kPa	150PG	0 psi to 150 psi
1.6BG	0 bar to 1.6 bar	160KG	0 kPa to 160 kPa		
2.5BG	0 bar to 2.5 bar	250KG	0 kPa to 250 kPa		
004BG	0 bar to 4 bar	400KG	0 kPa to 400 kPa		
006BG	0 bar to 6 bar	600KG	0 kPa to 600 kPa		
010BG	0 bar to 10 bar	001GG	0 kPa to 1 MPa		

Option

N	Dry gases only, no diagnostics
D	Dry gases only, diagnostics on
T	Liquid media, silicone gel, no diagnostics
V	Liquid media, silicone gel, diagnostics on
F	Liquid media, flourosilicone gel, diagnostics on
G	Liquid media, flourosilicone gel, no diagnostics

[1] Custom pressure ranges are available. Contact Honeywell Customer Service for more information.
[2] See the explanation of sensor pressure types in Table 4.
[3] The transfer function limits define the output of the sensor at a given pressure input. By specifying Pmin. and Pmax., the output at Pmin. and Pmax., the complete transfer function of the sensor is defined. See the graphical representations of the transfer function in Figure 2.

Basic Board Mount Pressure Sensors, ABP Series

TABLE 7. PRESSURE RANGE SPECIFICATIONS

PRESSURE RANGE (SEE FIGURE 3.)	PRESSURE RANGE		UNIT	OVERPRESSURE[1]		BURST PRESSURE[2]		COMMON MODE PRESSURE[3]
	PMIN.	PMAX.		PORT 1 (P1)	PORT 2 (P2)	PORT 1 (P1)	PORT 2 (P2)	
1 psi to 150 psi								
Differential								
060MD	-60	60	mbar	2000	850	3500	1000	10000
100MD	-100	100	mbar	4000	1400	7000	2500	10000
160MD	-160	160	mbar	4000	1400	7000	2500	10000
250MD	-250	250	mbar	10000	2000	19000	4000	10000
400MD	-400	400	mbar	10000	2000	19000	4000	10000
600MD	-600	600	mbar	17000	2000	19000	4000	10000
001BD	-1	1	bar	17	4	19	8	17
1.6BD	-1.6	1.6	bar	17	8	19	16	17
2.5BD	-2.5	2.5	bar	17	8	19	16	17
004BD	-4.0	4.0	bar	17	16	19	19	17
Gage								
060MG	0	60	mbar	2000	—	3500	—	5500
100MG	0	100	mbar	2000	—	3500	—	10000
160MG	0	160	mbar	2000	—	3500	—	10000
250MG	0	250	mbar	4000	—	7000	—	10000
400MG	0	400	mbar	10000	—	19000	—	10000
600MG	0	600	mbar	10000	—	19000	—	10000
001BG	0	1	bar	17	—	19	—	17
1.6BG	0	1.6	bar	17	—	19	—	17
2.5BG	0	2.5	bar	17	—	19	—	17
004BG	0	4	bar	17	—	19	—	17
006BG	0	6	bar	17	—	19	—	17
010BG	0	10	bar	17	—	19	—	17
6 kPa to 1 MPa								
Differential								
006KD	-6	6	kPa	200	85	350	100	1000
010KD	-10	10	kPa	400	140	700	250	1000
016KD	-16	16	kPa	400	140	700	250	1000
025KD	-25	25	kPa	1000	200	1900	400	1000
040KD	-40	40	kPa	1000	200	1900	400	1000
060KD	-60	60	kPa	1700	200	1900	400	1000
100KD	-100	100	kPa	1700	400	1900	800	1700
160KD	-160	160	kPa	1700	800	1900	1600	1700
250KD	-250	250	kPa	1700	800	1900	1600	1700
400KD	-400	400	kPa	1700	1600	1900	1900	1700
Gage								
006KG	0	6	kPa	200	—	350	—	550
010KG	0	10	kPa	200	—	350	—	1000
016KG	0	16	kPa	200	—	350	—	1000
025KG	0	25	kPa	400	—	700	—	1000
040KG	0	40	kPa	1000	—	1900	—	1000
060KG	0	60	kPa	1000	—	1900	—	1000
100KG	0	100	kPa	1700	—	1900	—	1700
160KG	0	160	kPa	1700	—	1900	—	1700
250KG	0	250	kPa	1700	—	1900	—	1700
400KG	0	400	kPa	1700	—	1900	—	1700
600KG	0	600	kPa	1700	—	1900	—	1700
001GG	0	1	MPa	1.7	—	1.9	—	1.7

TABLE 7. PRESSURE RANGE SPECIFICATIONS (CONTINUED)

PRESSURE RANGE (SEE FIGURE 3.)	PRESSURE RANGE		UNIT	OVERPRESSURE[1]		BURST PRESSURE[2]		COMMON MODE PRESSURE[3]
	PMIN.	PMAX.		Port 1 (P1)	Port 2 (P2)	Port 1 (P1)	Port 2 (P2)	
1 psi to 150 psi								
Differential								
001PD	-1	1	psi	30	10	50	15	150
005PD	-5	5	psi	150	30	275	40	150
015PD	-15	15	psi	250	60	275	120	250
030PD	-30	30	psi	250	120	275	240	250
060PD	-60	60	psi	250	250	275	275	250
Gage								
001PG	0	1	psi	30	—	50	—	150
005PG	0	5	psi	150	—	275	—	150
015PG	0	15	psi	250	—	275	—	250
030PG	0	30	psi	250	—	275	—	250
060PG	0	60	psi	250	—	275	—	250
100PG	0	100	psi	250	—	275	—	250
150PG	0	150	psi	250	—	275	—	250

[1]Overpressure: The maximum pressure which may safely be applied to the product for it to remain in specification once pressure is returned to the operating pressure range. Exposure to higher pressures may cause permanent damage to the product. Unless otherwise specified this applies to all available pressure ports at any temperature with the operating temperature range.

[2]Burst pressure: The maximum pressure that may be applied to the specified port (P1 or P2) of the product without causing escape of pressure media. Product should not be expected to function after exposure to any pressure beyond the burst pressure.

[3]Common mode pressure: The maximum pressure that can be applied simultaneously to both ports of a differential pressure sensor without causing changes in specified performance.

FIGURE 4. RECOMMENDED FILTER CAP

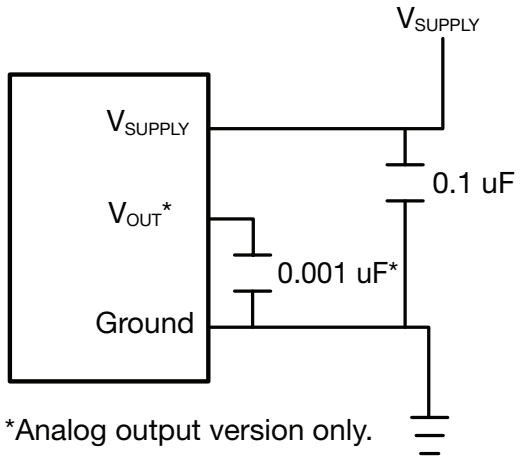

FIGURE 5. DIP PACKAGE DIMENSIONAL DRAWINGS (FOR REFERENCE ONLY: MM [IN].)

DIP NN: No port

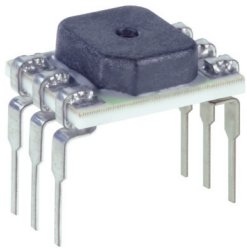

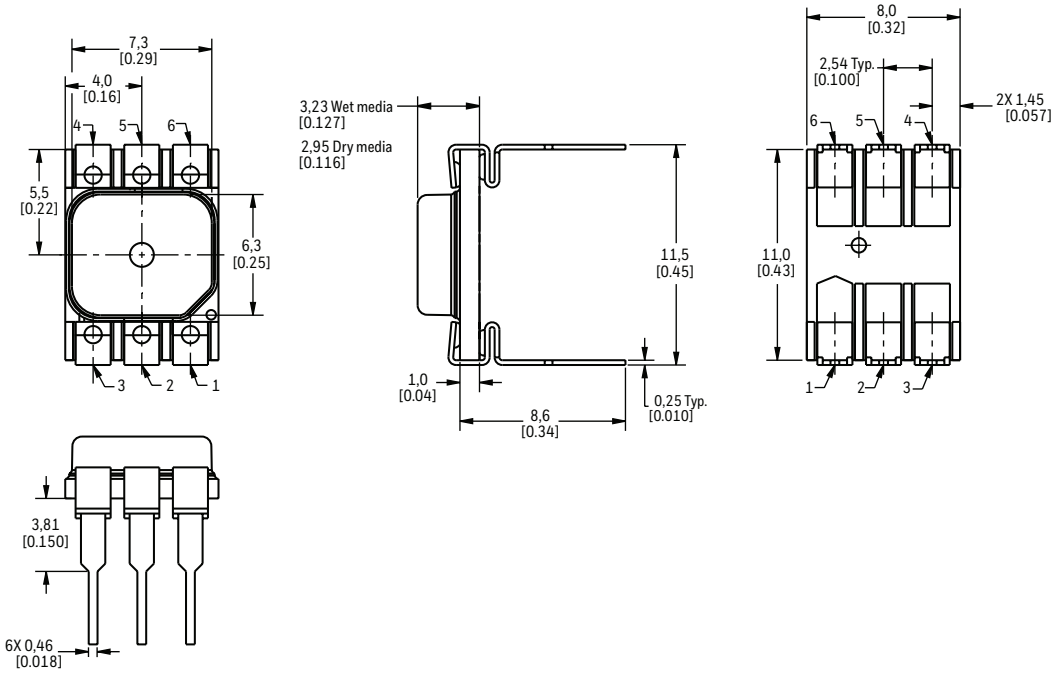

DIP AN: Single axial barbed port

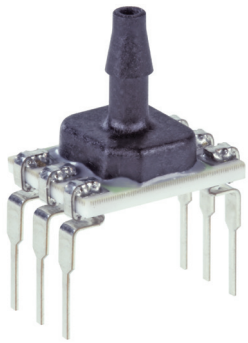

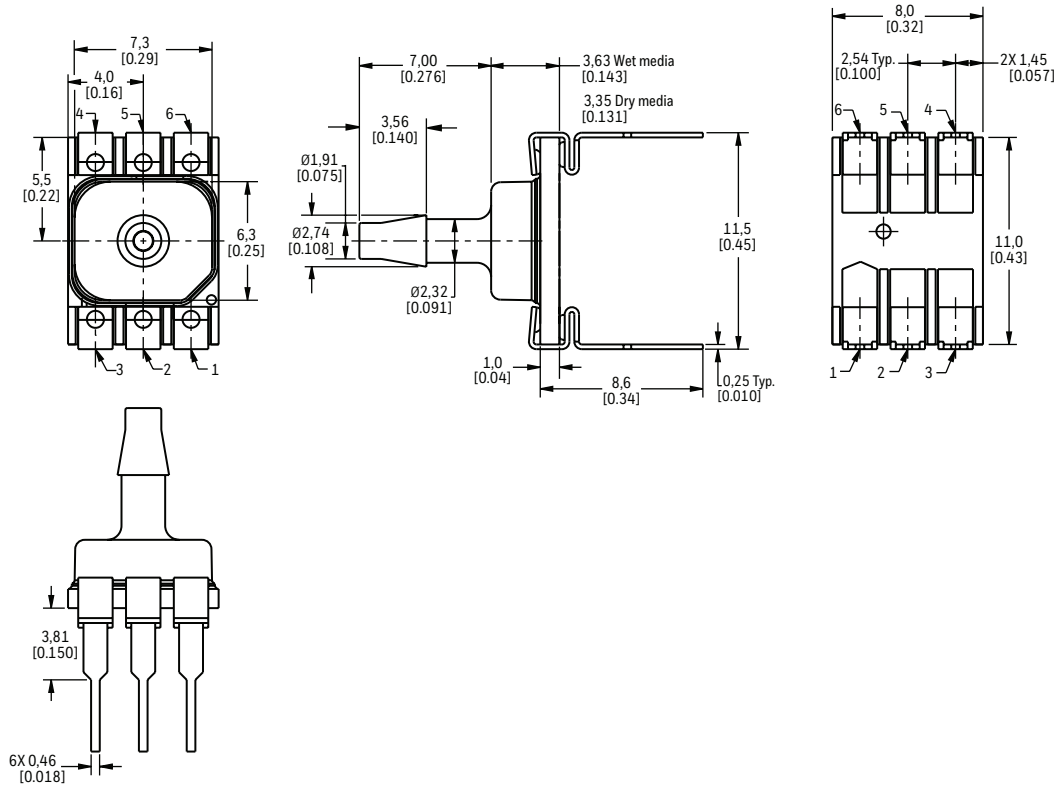

FIGURE 5. DIP PACKAGE DIMENSIONAL DRAWINGS (CONTINUED)

DIP LN: Single axial barbless port

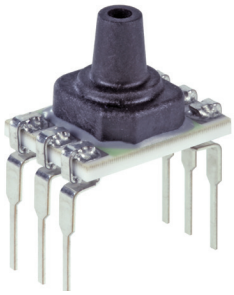

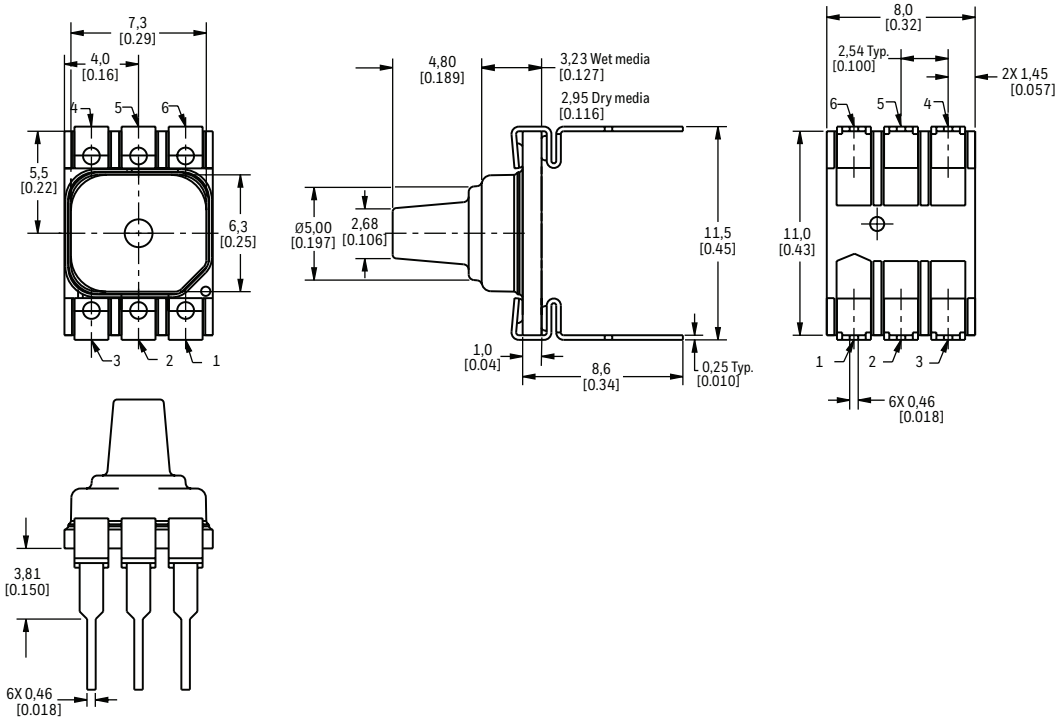

DIP JN: Single radial barbless port

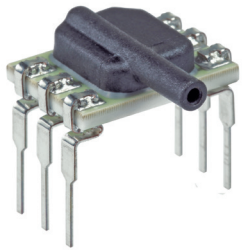

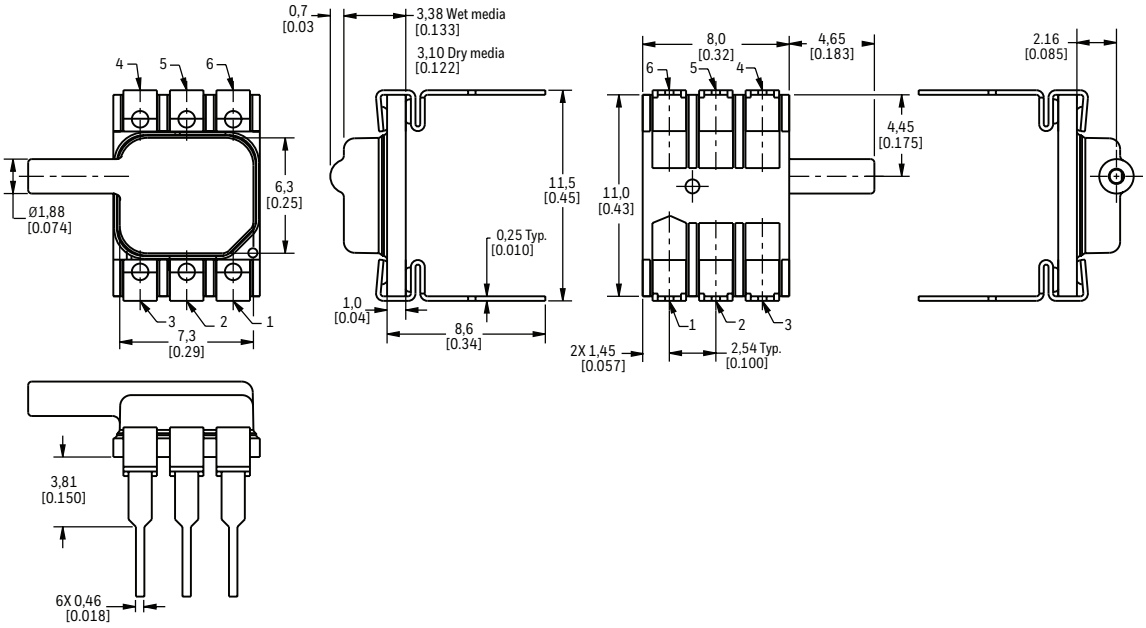

FIGURE 5. DIP PACKAGE DIMENSIONAL DRAWINGS (CONTINUED)

DIP JJ: Dual radial barbless ports, same side

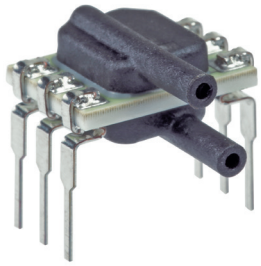

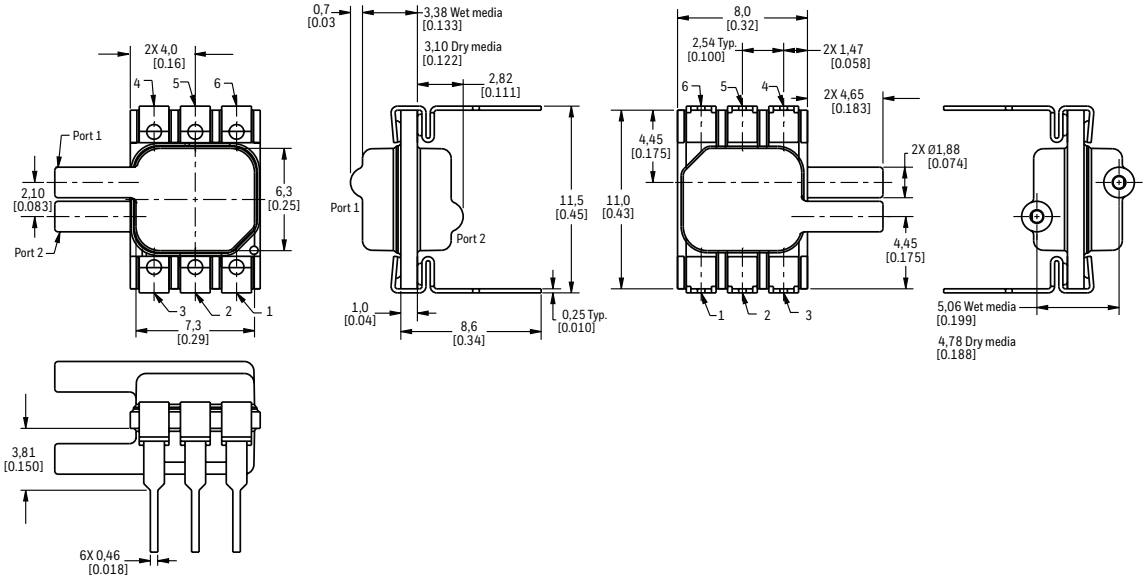

DIP RN: Single radial barbed port

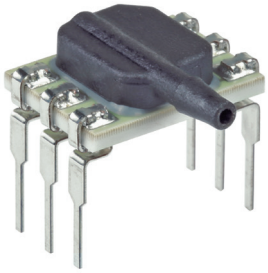

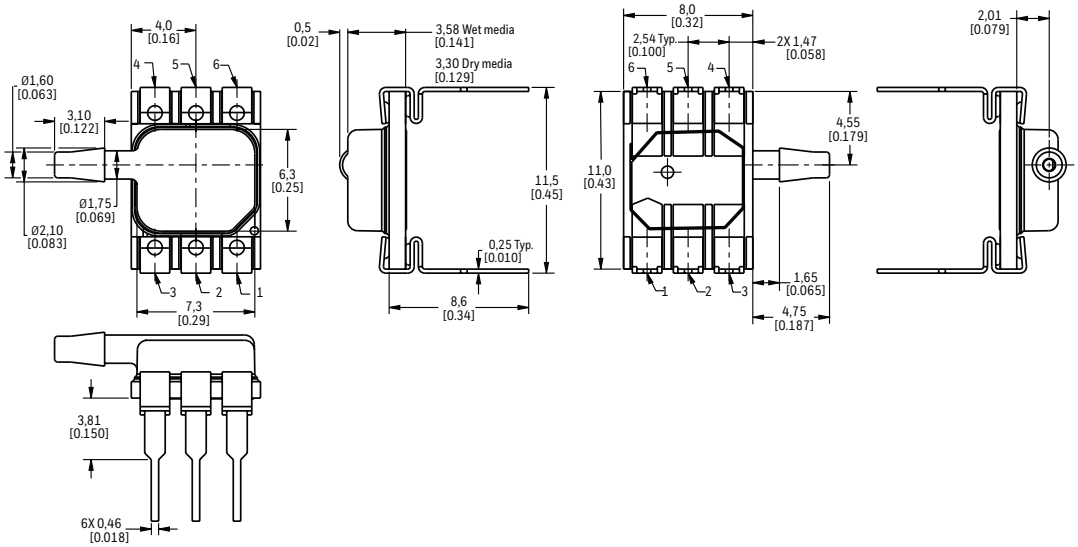

DIP RR: Dual radial barbed ports, same side

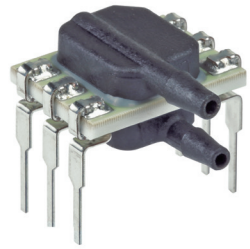

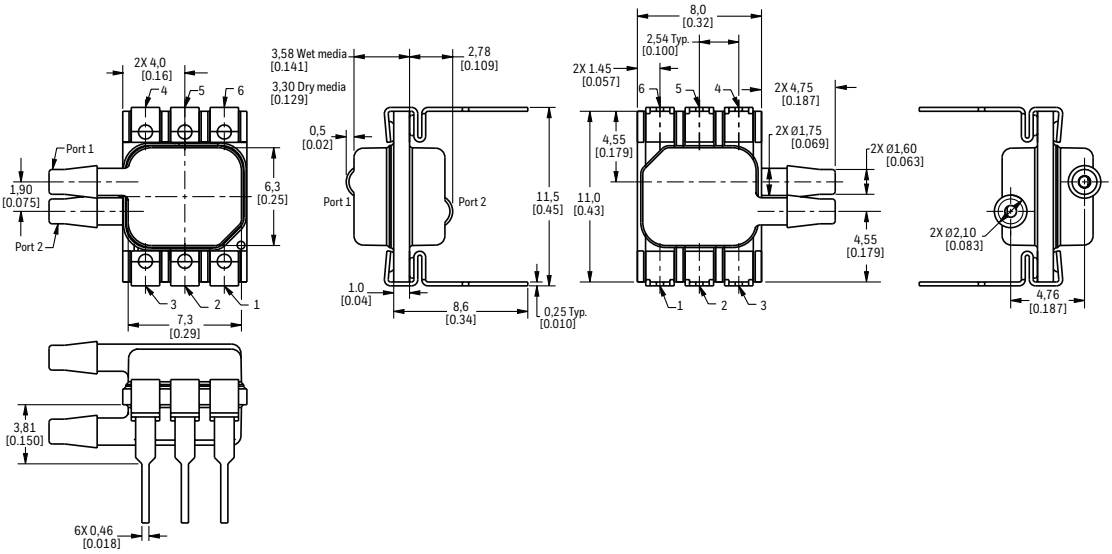

FIGURE 6. SMT PACKAGE DIMENSIONAL DRAWINGS (FOR REFERENCE ONLY: MM [IN].)

SMT NN: No port

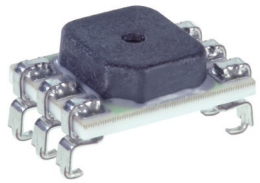

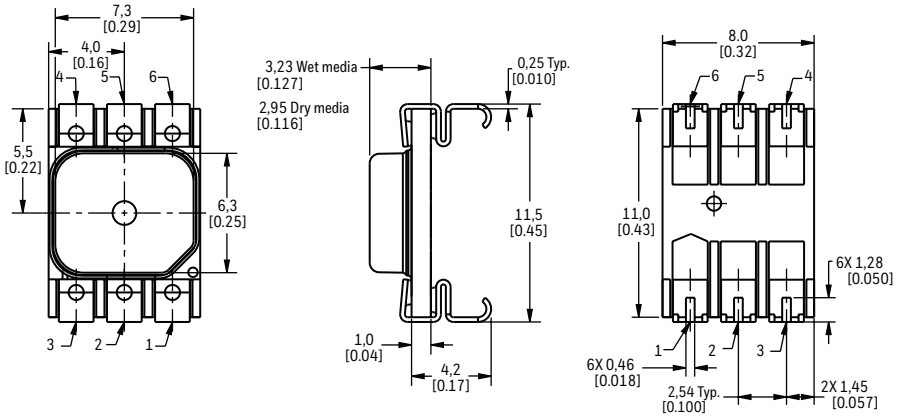

SMT AN: Single axial barbed port

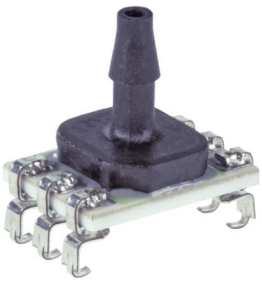

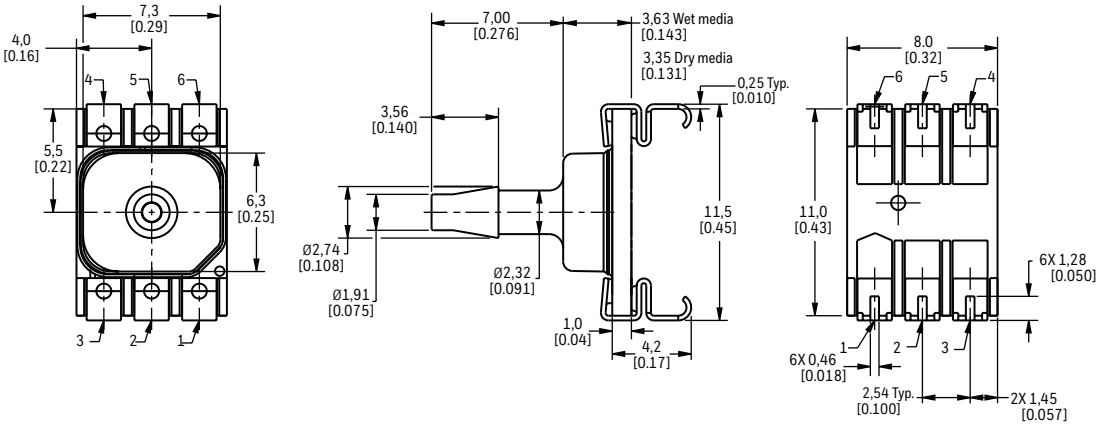

SMT LN: Single axial barbless port

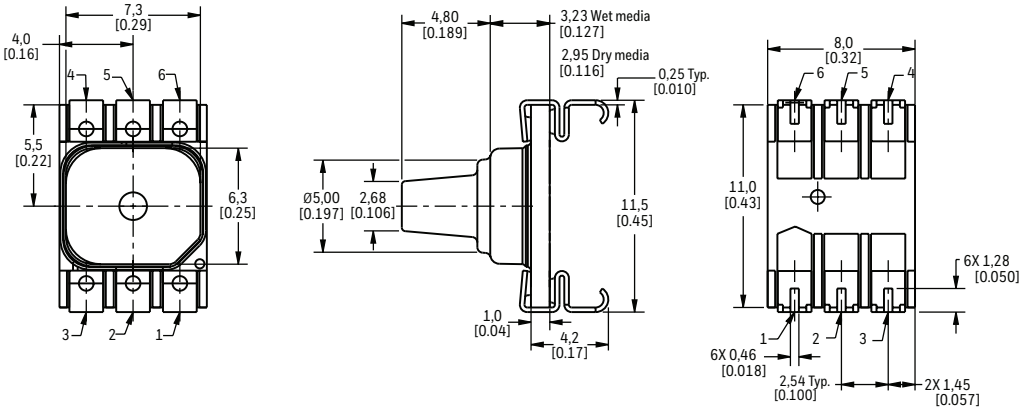

SMT JN: Single radial barbless port

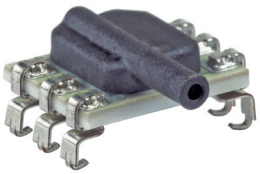

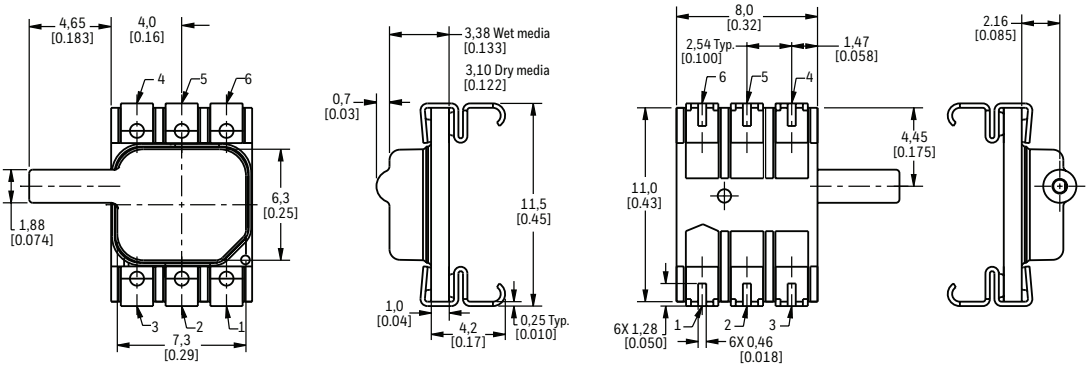

FIGURE 6. SMT PACKAGE DIMENSIONAL DRAWINGS (CONTINUED)

SMT JJ: Dual radial barbless ports, same side

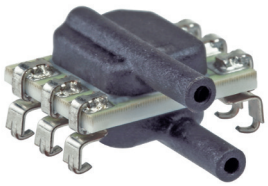

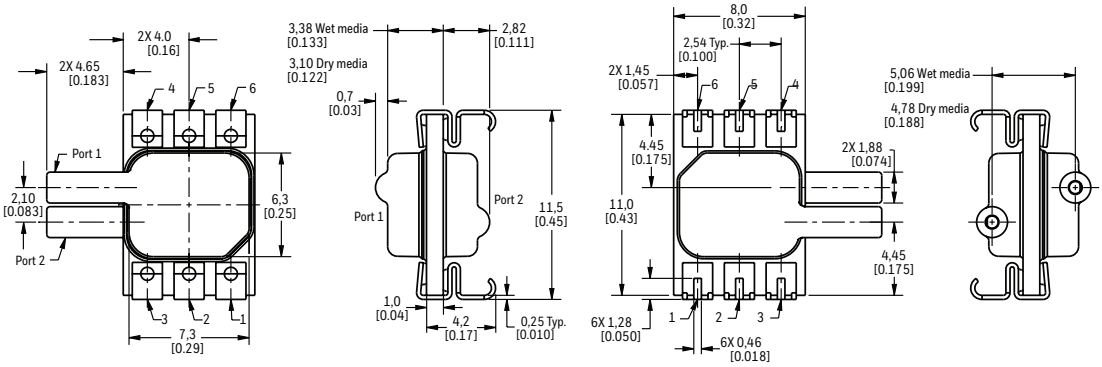

SMT RN: Single radial barbed port

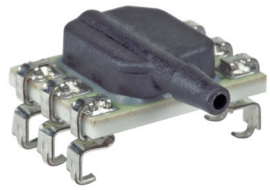

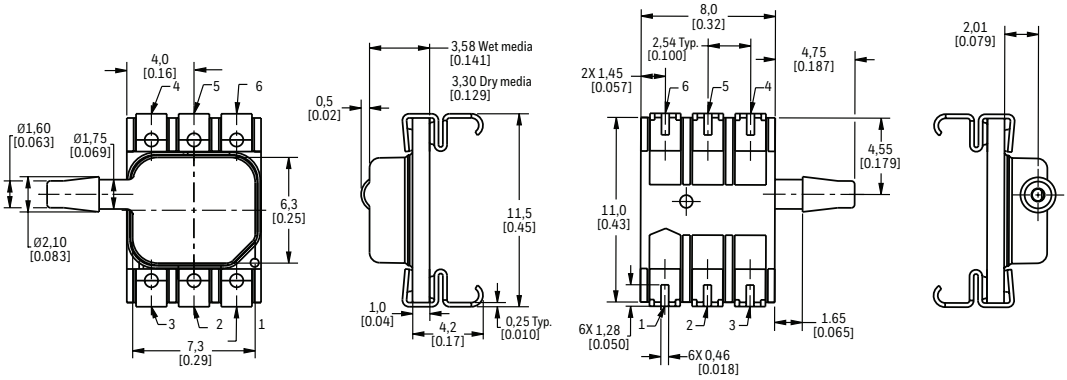

SMT RR: Dual radial barbed ports, both sides

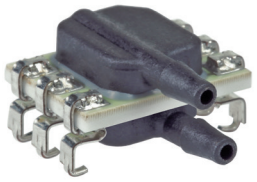

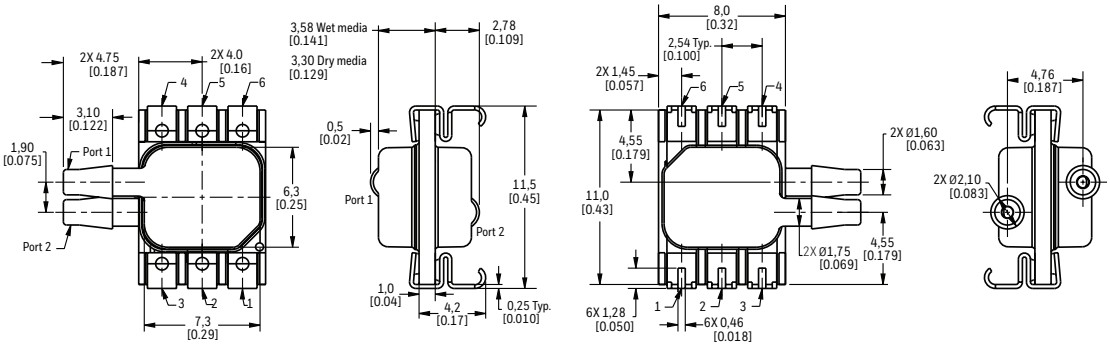

FIGURE 7. LEADLESS SMT PACKAGE DIMENSIONAL DRAWINGS (FOR REFERENCE ONLY: MM [IN].)

Leadless SMT NN: No port

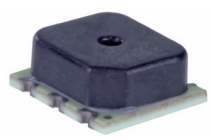

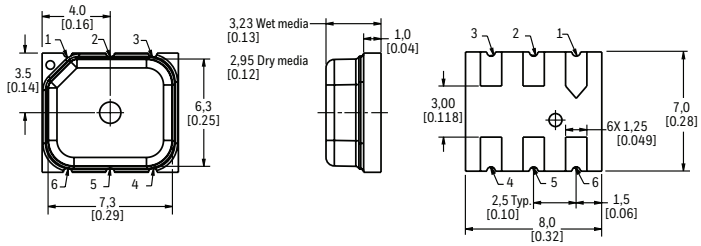

Leadless SMT AN: Single axial barbed port

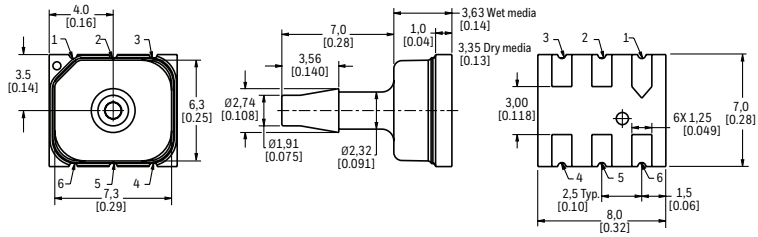

Leadless SMT LN: Single axial barbless port

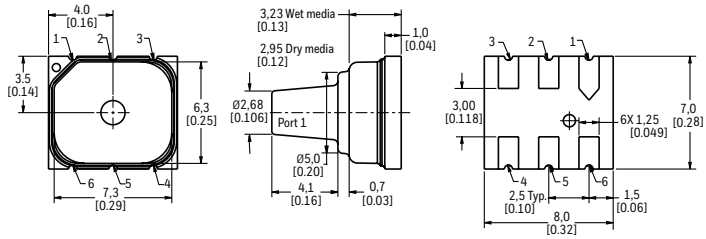

TABLE 8. PINOUTS

OUTPUT TYPE	PIN 1	PIN 2	PIN 3	PIN 4	PIN 5	PIN 6
I^2C	GND	V_{supply}	INT	NC	SDA	SCL
SPI	GND	V_{supply}	SS	NC	MISO	SCLK
analog	GND	NC	V_{out}	NC	NC	V_{supply}

FIGURE 8. RECOMMENDED PCB LAYOUTS

DIP

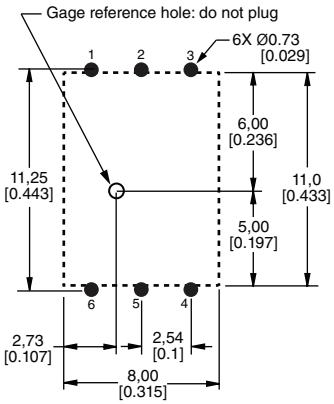

SMT

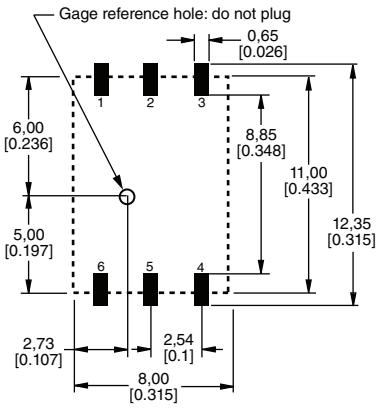

Leadless SMT

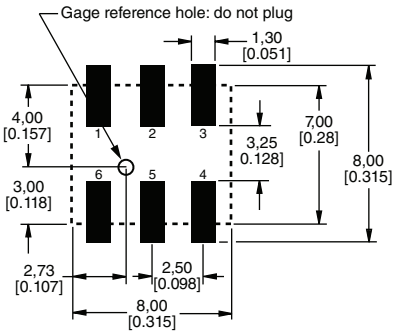

ADDITIONAL MATERIALS

The following associated literature is available at sensing.honeywell.com:

- Product range guide
- Installation instructions
- Application note

WARRANTY/REMEDY

Honeywell warrants goods of its manufacture as being free of defective materials and faulty workmanship during the applicable warranty period. Honeywell's standard product warranty applies unless agreed to otherwise by Honeywell in writing; please refer to your order acknowledgment or consult your local sales office for specific warranty details. If warranted goods are returned to Honeywell during the period of coverage, Honeywell will repair or replace, at its option, without charge those items that Honeywell, in its sole discretion, finds defective. **The foregoing is buyer's sole remedy and is in lieu of all other warranties, expressed or implied, including those of merchantability and fitness for a particular purpose. In no event shall Honeywell be liable for consequential, special, or indirect damages.**

While Honeywell may provide application assistance personally, through our literature and the Honeywell web site, it is buyer's sole responsibility to determine the suitability of the product in the application.

Specifications may change without notice. The information we supply is believed to be accurate and reliable as of this writing. However, Honeywell assumes no responsibility for its use.

⚠ WARNING
PERSONAL INJURY

DO NOT USE these products as safety or emergency stop devices or in any other application where failure of the product could result in personal injury.

Failure to comply with these instructions could result in death or serious injury.

⚠ WARNING
MISUSE OF DOCUMENTATION

- The information presented in this product sheet is for reference only. Do not use this document as a product installation guide.
- Complete installation, operation, and maintenance information is provided in the instructions supplied with each product.

Failure to comply with these instructions could result in death or serious injury.

FOR MORE INFORMATION

Honeywell Sensing and Internet of Things services its customers through a worldwide network of sales offices and distributors. For application assistance, current specifications, pricing or the nearest Authorized Distributor, visit sensing.honeywell.com or call:

Asia Pacific	+65 6355-2828
Europe	+44 1698 481481
USA/Canada	+1-800-537-6945

Honeywell
Sensing and Internet of Things
9680 Old Bailes Road
Fort Mill, SC 29707
honeywell.com

32305128-F-EN | F | 07/19
© 2019 Honeywell International Inc. All rights reserved.

Honeywell

OCEAN CHIPS
Океан Электроники
Поставка электронных компонентов

Компания «Океан Электроники» предлагает заключение долгосрочных отношений при поставках импортных электронных компонентов на взаимовыгодных условиях!

Наши преимущества:

- Поставка оригинальных импортных электронных компонентов напрямую с производств Америки, Европы и Азии, а так же с крупнейших складов мира;
- Широкая линейка поставок активных и пассивных импортных электронных компонентов (более 30 млн. наименований);
- Поставка сложных, дефицитных, либо снятых с производства позиций;
- Оперативные сроки поставки под заказ (от 5 рабочих дней);
- Экспресс доставка в любую точку России;
- Помощь Конструкторского Отдела и консультации квалифицированных инженеров;
- Техническая поддержка проекта, помощь в подборе аналогов, поставка прототипов;
- Поставка электронных компонентов под контролем ВП;
- Система менеджмента качества сертифицирована по Международному стандарту ISO 9001;
- При необходимости вся продукция военного и аэрокосмического назначения проходит испытания и сертификацию в лаборатории (по согласованию с заказчиком);
- Поставка специализированных компонентов военного и аэрокосмического уровня качества (Xilinx, Altera, Analog Devices, Intersil, Interpoint, Microsemi, Actel, Aeroflex, Peregrine, VPT, Syfer, Eurofarad, Texas Instruments, MS Kennedy, Miteq, Cobham, E2V, MA-COM, Hittite, Mini-Circuits, General Dynamics и др.);

Компания «Океан Электроники» является официальным дистрибьютором и эксклюзивным представителем в России одного из крупнейших производителей разъемов военного и аэрокосмического назначения **«JONHON»**, а так же официальным дистрибьютором и эксклюзивным представителем в России производителя высокотехнологичных и надежных решений для передачи СВЧ сигналов **«FORSTAR»**.

AVIC JONHON

«JONHON» (основан в 1970 г.)

Разъемы специального, военного и аэрокосмического назначения:

(Применяются в военной, авиационной, аэрокосмической, морской, железнодорожной, горно- и нефтедобывающей отраслях промышленности)

«FORSTAR» (основан в 1998 г.)

ВЧ соединители, коаксиальные кабели, кабельные сборки и микроволновые компоненты:

(Применяются в телекоммуникациях гражданского и специального назначения, в средствах связи, РЛС, а так же военной, авиационной и аэрокосмической отраслях промышленности).

FORSTAR®

Телефон: 8 (812) 309-75-97 (многоканальный)
Факс: 8 (812) 320-03-32
Электронная почта: ocean@oceanchips.ru
Web: http://oceanchips.ru/
Адрес: 198099, г. Санкт-Петербург, ул. Калинина, д. 2, корп. 4, лит. А