SN54153, SN54LS153, SN54S153
SN74153, SN74LS153, SN74S153
DUAL 4-LINE TO 1-LINE DATA SELECTORS/MULTIPLEXERS

DECEMBER 1972 – REVISED MARCH 1988

- Permits Multiplexing from N lines to 1 line
- Performs Parallel-to-Serial Conversion
- Strobe (Enable) Line Provided for Cascading (N lines to n lines)
- High-Fan-Out, Low-Impedance, Totem-Pole Outputs
- Fully Compatible with most TTL Circuits

SN54153, SN54LS153, SN54S153 . . . J OR W PACKAGE
SN74153 . . . N PACKAGE
SN74LS153, SN74S153 . . . D OR N PACKAGE
(TOP VIEW)

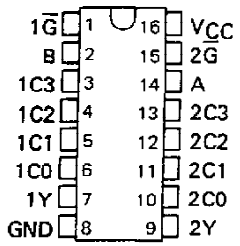

TYPE	TYPICAL AVERAGE PROPAGATION DELAY TIMES FROM DATA	FROM STROBE	FROM SELECT	TYPICAL POWER DISSIPATION
'153	14 ns	17 ns	22 ns	180 mW
'LS153	14 ns	19 ns	22 ns	31 mW
'S153	6 ns	9.5 ns	12 ns	225 mW

SN54LS153, SN54S153 . . . FK PACKAGE
(TOP VIEW)

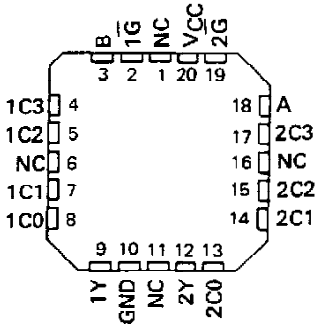

NC – No internal connection

description

Each of these monolithic, data selectors/multiplexers contains inverters and drivers to supply fully complementary, on-chip, binary decoding data selection to the AND-OR gates. Separate strobe inputs are provided for each of the two four-line sections.

FUNCTION TABLE

SELECT INPUTS B	A	DATA INPUTS C0	C1	C2	C3	STROBE $\overline{G}$	OUTPUT Y
X	X	X	X	X	X	H	L
L	L	L	X	X	X	L	L
L	L	H	X	X	X	L	H
L	H	X	L	X	X	L	L
L	H	X	H	X	X	L	H
H	L	X	X	L	X	L	L
H	L	X	X	H	X	L	H
H	H	X	X	X	L	L	L
H	H	X	X	X	H	L	H

Select inputs A and B are common to both sections.
H = high level, L = low level, X = irrelevant

absolute maximum ratings over operating free-air temperature range (unless otherwise noted)

Supply voltage, V_{CC} (See Note 1) . . . . . 7 V
Input voltage: '153, 'S153 . . . . . 5.5 V
'LS153 . . . . . 7 V
Operating free-air temperature range: SN54' . . . . . −55°C to 125°C
SN74' . . . . . 0°C to 70°C
Storage temperature range . . . . . −65°C to 150°C

NOTE 1: Voltage values are with respect to network ground terminal.

PRODUCTION DATA documents contain information current as of publication date. Products conform to specifications per the terms of Texas Instruments standard warranty. Production processing does not necessarily include testing of all parameters.

TEXAS INSTRUMENTS
POST OFFICE BOX 655012 • DALLAS, TEXAS 75265

logic symbol†

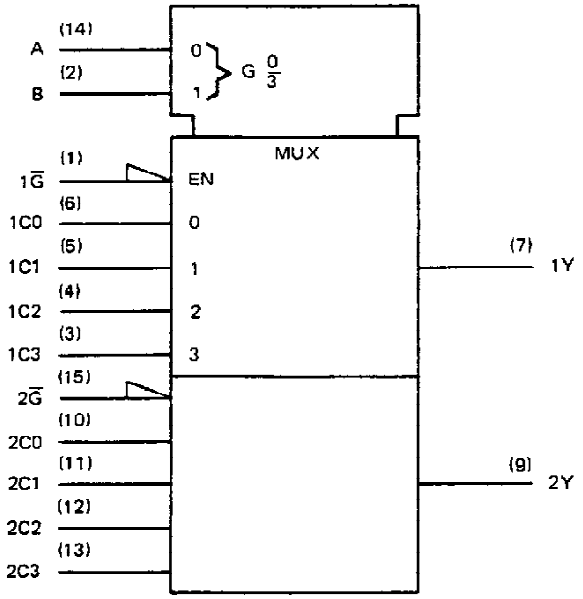

†This symbol is in accordance with ANSI/IEEE Std. 91-1984 and IEC Publication 617-12.

logic diagrams (positive logic)

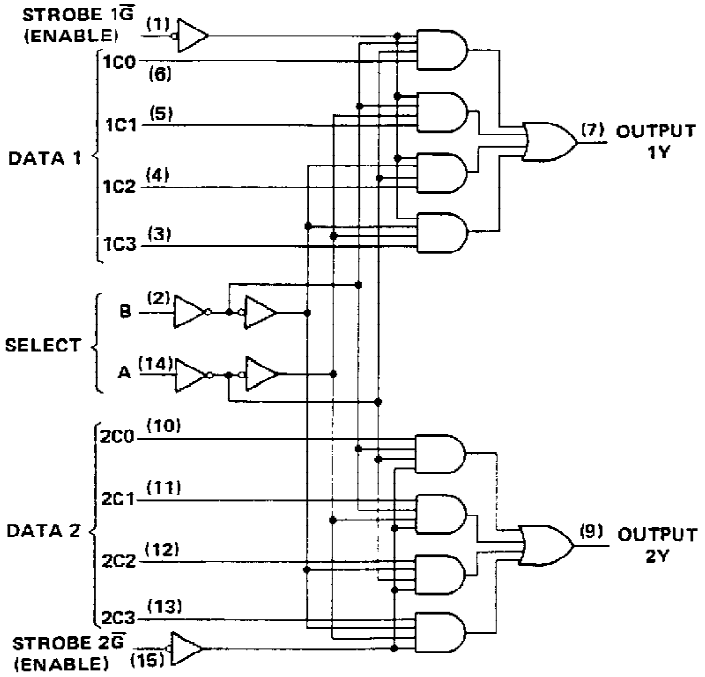

Pin numbers shown are for D, J, N, and W packages.

schematics of inputs and outputs

EQUIVALENT OF INPUTS OF '153

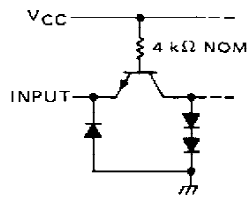

EQUIVALENT OF INPUTS OF 'S153

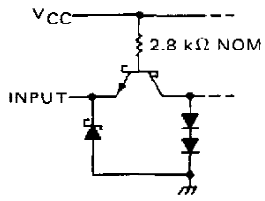

EQUIVALENT OF $1\overline{G}$, $2\overline{G}$ INPUTS OF LS153

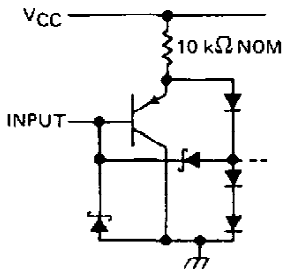

EQUIVALENT OF ALL OTHER INPUTS OF 'LS153

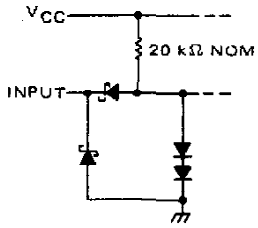

TYPICAL OF OUTPUTS OF '153

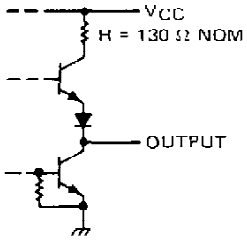

TYPICAL OF OUTPUTS OF 'LS153

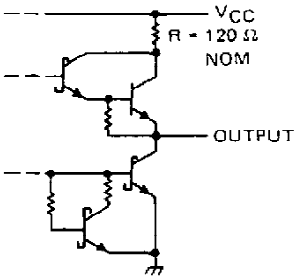

TYPICAL OF OUTPUTS OF 'S153

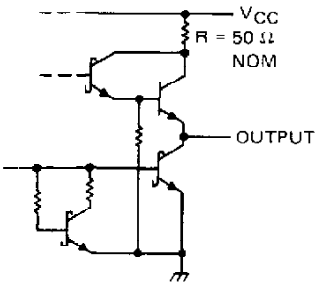

recommended operating conditions

	SN54153			SN74153			UNIT
	MIN	NOM	MAX	MIN	NOM	MAX	
Supply voltage, V_{CC}	4.5	5	5.5	4.75	5	5.25	V
High-level output current, I_{OH}			−800			−800	μA
Low-level output current, I_{OL}			16			16	mA
Operating free-air temperature, T_A	−55		125	0		70	°C

electrical characteristics over recommended operating free-air temperature range (unless otherwise noted)

PARAMETER		TEST CONDITIONS†	SN54153			SN74153			UNIT
			MIN	TYP‡	MAX	MIN	TYP‡	MAX	
V_{IH}	High-level input voltage		2			2			V
V_{IL}	Low-level input voltage				0.8			0.8	V
V_{IK}	Input clamp voltage	V_{CC} = MIN, I_I = −12 mA			−1.5			−1.5	V
V_{OH}	High-level output voltage	V_{CC} = MIN, V_{IH} = 2 V, V_{IL} = 0.8 V, I_{OH} = −800 μA	2.4	3.4		2.4	3.4		V
V_{OL}	Low-level output voltage	V_{CC} = MIN, V_{IH} = 2 V, V_{IL} = 0.8 V, I_{OL} = 16 mA		0.2	0.4		0.2	0.4	V
I_I	Input current at maximum input voltage	V_{CC} = MAX, V_I = 5.5 V			1			1	mA
I_{IH}	High-level input current	V_{CC} = MAX, V_I = 2.4 V			40			40	μA
I_{IL}	Low-level input current	V_{CC} = MAX, V_I = 0.4 V			−1.6			−1.6	mA
I_{OS}	Short-circuit output current§	V_{CC} = MAX	−20		−55	−18		−57	mA
I_{CCL}	Supply current, output low	V_{CC} = MAX, See Note 2		36	52		36	60	mA

†For conditions shown as MIN or MAX, use the appropriate value specified under recommended operating conditions.
‡All typical values are at V_{CC} = 5 V, T_A = 25°C.
§Not more than one output should be shorted at a time.
NOTE 2: I_{CCL} is measured with the outputs open and all inputs grounded.

switching characteristics, V_{CC} = 5 V, T_A = 25°C

PARAMETER¶	FROM (INPUT)	TO (OUTPUT)	TEST CONDITIONS	MIN	TYP	MAX	UNIT
t_{PLH}	Data	Y	C_L = 30 pF, R_L = 400 Ω, See Note 3		12	18	ns
t_{PHL}	Data	Y			15	23	ns
t_{PLH}	Select	Y			22	34	ns
t_{PHL}	Select	Y			22	34	ns
t_{PLH}	Strobe $\overline{G}$	Y			19	30	ns
t_{PHL}	Strobe $\overline{G}$	Y			15	23	ns

¶t_{PLH} = propagation delay time, low-to-high-level output
t_{PHL} = propagation delay time, high-to-low-level output
NOTE 3: Load circuits and voltage waveforms are shown in Section 1.

recommended operating conditions

		SN54LS153			SN74LS153			UNIT
		MIN	NOM	MAX	MIN	NOM	MAX	
V_{CC}	Supply voltage	4.5	5	5.5	4.75	5	5.25	V
V_{IH}	High-level input voltage	2			2			V
V_{IL}	Low-level input voltage			0.7			0.8	V
I_{OH}	High-level output current			−0.4			−0.4	mA
I_{OL}	Low-level output current			4			8	mA
T_A	Operating free-air temperature	−55		125	0		70	°C

electrical characteristics over recommended operating free-air temperature range (unless otherwise noted)

PARAMETER		TEST CONDITIONS†		SN54LS153			SN74LS153			UNIT
				MIN	TYP‡	MAX	MIN	TYP‡	MAX	
V_{IK}		V_{CC} = MIN, I_I = −18 mA				−1.5			−1.5	V
V_{OH}		V_{CC} = MIN, V_{IH} = 2 V, V_{IL} = MAX, I_{OH} = −0.4 mA		2.5	3.4		2.7	3.4		V
V_{OL}		V_{CC} = MIN, V_{IH} = 2 V, V_{IL} = MAX,	I_{OL} = 4 mA		0.25	0.4		0.25	0.4	V
			I_{OL} = 8 mA					0.35	0.5	
I_I		V_{CC} = MAX, V_I = 7 V				0.1			0.1	mA
I_{IH}		V_{CC} = MAX, V_I = 2.7 V				20			20	μA
I_{IL}	$\overline{1G}$, $\overline{2G}$	V_{CC} = MAX, V_I = 0.4 V				−0.2			−0.2	mA
	All other					−0.4			−0.4	
I_{OS}§		V_{CC} = MAX		−20		−100	−20		−100	mA
I_{CCL}		V_{CC} = MAX, See Note 2			6.2	10		6.2	10	mA

† For conditions shown as MIN or MAX, use the appropriate value specified under recommended operating conditions.
‡ All typical values are at V_{CC} = 5 V, T_A = 25°C.
§ Not more than one output should be shorted at a time.
NOTE 2: I_{CCL} is measured with the outputs open and all inputs grounded.

switching characteristics, V_{CC} = 5 V, T_A = 25°C

PARAMETER¶	FROM (INPUT)	TO (OUTPUT)	TEST CONDITIONS	MIN	TYP	MAX	UNIT
t_{PLH}	Data	Y	C_L = 15 pF, R_L = 2 kΩ, See Note 3		10	15	ns
t_{PHL}	Data	Y			17	26	ns
t_{PLH}	Select	Y			19	29	ns
t_{PHL}	Select	Y			25	38	ns
t_{PLH}	Strobe $\overline{G}$	Y			16	24	ns
t_{PHL}	Strobe $\overline{G}$	Y			21	32	ns

¶ t_{PLH} = propagation delay time, low-to-high-level output
t_{PHL} = propagation delay time, high-to-low-level output
NOTE 3: Load circuits and voltage waveforms are shown in Section 1.

recommended operating conditions

	SN54S153			SN74S153			UNIT
	MIN	NOM	MAX	MIN	NOM	MAX	
Supply voltage, V_{CC}	4.5	5	5.5	4.75	5	5.25	V
High-level output current, I_{OH}			−1			−1	mA
Low-level output current, I_{OL}			20			20	mA
Operating free-air temperature, T_A	−55		125	0		70	°C

electrical characteristics over recommended operating free-air temperature range (unless otherwise noted)

PARAMETER		TEST CONDITIONS†		MIN	TYP‡	MAX	UNIT
V_{IH}	High-level input voltage			2			V
V_{IL}	Low-level input voltage					0.8	V
V_{IK}	Input clamp voltage	V_{CC} = MIN, I_I = −18 mA				−1.2	V
V_{OH}	High-level output voltage	V_{CC} = MIN, V_{IH} = 2 V, V_{IL} = 0.8 V, I_{OH} = −1 mA	Series 54S	2.5	3.4		V
			Series 74S	2.7	3.4		
V_{OL}	Low-level output voltage	V_{CC} = MIN, V_{IH} = 2 V, V_{IL} = 0.8 V, I_{OL} = 20 mA				0.5	V
I_I	Input current at maximum input voltage	V_{CC} = MAX, V_I = 5.5 V				1	mA
I_{IH}	High-level input current	V_{CC} = MAX, V_I = 2.7 V				50	μA
I_{IL}	Low-level input current	V_{CC} = MAX, V_I = 0.5 V				−2	mA
I_{OS}	Short-circuit output current§	V_{CC} = MAX		−40		−100	mA
I_{CCL}	Supply current, low-level output	V_{CC} = MAX, See Note 2			45	70	mA

†For conditions shown as MIN or MAX, use the appropriate value specified under recommended operating conditions.
‡All typical values are at V_{CC} = 5 V, T_A = 25°C.
§Not more than one output should be shorted at a time and duration of short-circuit should not exceed one second.
NOTE 2: I_{CCL} is measured with the outputs open and all inputs grounded.

switching characteristics, V_{CC} = 5 V, T_A = 25°C

PARAMETER¶	FROM (INPUT)	TO (OUTPUT)	TEST CONDITIONS	MIN	TYP	MAX	UNIT
t_{PLH}	Data	Y	C_L = 15 pF, R_L = 280 Ω, See Note 3		6	9	ns
t_{PHL}	Data	Y			6	9	ns
t_{PLH}	Select	Y			11.5	18	ns
t_{PHL}	Select	Y			12	18	ns
t_{PLH}	Strobe $\overline{G}$	Y			10	15	ns
t_{PHL}	Strobe $\overline{G}$	Y			9	13.5	ns

¶t_{PLH} = propagation delay time, low-to-high-level output
t_{PHL} = propagation delay time, high to-low level output
NOTE 3: Load circuits and voltage waveforms are shown in Section 1.

IMPORTANT NOTICE

Texas Instruments (TI) reserves the right to make changes to its products or to discontinue any semiconductor product or service without notice, and advises its customers to obtain the latest version of relevant information to verify, before placing orders, that the information being relied on is current.

TI warrants performance of its semiconductor products and related software to the specifications applicable at the time of sale in accordance with TI's standard warranty. Testing and other quality control techniques are utilized to the extent TI deems necessary to support this warranty. Specific testing of all parameters of each device is not necessarily performed, except those mandated by government requirements.

Certain applications using semiconductor products may involve potential risks of death, personal injury, or severe property or environmental damage ("Critical Applications").

TI SEMICONDUCTOR PRODUCTS ARE NOT DESIGNED, INTENDED, AUTHORIZED, OR WARRANTED TO BE SUITABLE FOR USE IN LIFE-SUPPORT APPLICATIONS, DEVICES OR SYSTEMS OR OTHER CRITICAL APPLICATIONS.

Inclusion of TI products in such applications is understood to be fully at the risk of the customer. Use of TI products in such applications requires the written approval of an appropriate TI officer. Questions concerning potential risk applications should be directed to TI through a local SC sales office.

In order to minimize risks associated with the customer's applications, adequate design and operating safeguards should be provided by the customer to minimize inherent or procedural hazards.

TI assumes no liability for applications assistance, customer product design, software performance, or infringement of patents or services described herein. Nor does TI warrant or represent that any license, either express or implied, is granted under any patent right, copyright, mask work right, or other intellectual property right of TI covering or relating to any combination, machine, or process in which such semiconductor products or services might be or are used.

Copyright © 1996, Texas Instruments Incorporated

IMPORTANT NOTICE

Texas Instruments and its subsidiaries (TI) reserve the right to make changes to their products or to discontinue any product or service without notice, and advise customers to obtain the latest version of relevant information to verify, before placing orders, that information being relied on is current and complete. All products are sold subject to the terms and conditions of sale supplied at the time of order acknowledgement, including those pertaining to warranty, patent infringement, and limitation of liability.

TI warrants performance of its semiconductor products to the specifications applicable at the time of sale in accordance with TI's standard warranty. Testing and other quality control techniques are utilized to the extent TI deems necessary to support this warranty. Specific testing of all parameters of each device is not necessarily performed, except those mandated by government requirements.

CERTAIN APPLICATIONS USING SEMICONDUCTOR PRODUCTS MAY INVOLVE POTENTIAL RISKS OF DEATH, PERSONAL INJURY, OR SEVERE PROPERTY OR ENVIRONMENTAL DAMAGE ("CRITICAL APPLICATIONS"). TI SEMICONDUCTOR PRODUCTS ARE NOT DESIGNED, AUTHORIZED, OR WARRANTED TO BE SUITABLE FOR USE IN LIFE-SUPPORT DEVICES OR SYSTEMS OR OTHER CRITICAL APPLICATIONS. INCLUSION OF TI PRODUCTS IN SUCH APPLICATIONS IS UNDERSTOOD TO BE FULLY AT THE CUSTOMER'S RISK.

In order to minimize risks associated with the customer's applications, adequate design and operating safeguards must be provided by the customer to minimize inherent or procedural hazards.

TI assumes no liability for applications assistance or customer product design. TI does not warrant or represent that any license, either express or implied, is granted under any patent right, copyright, mask work right, or other intellectual property right of TI covering or relating to any combination, machine, or process in which such semiconductor products or services might be or are used. TI's publication of information regarding any third party's products or services does not constitute TI's approval, warranty or endorsement thereof.

Copyright © 1998, Texas Instruments Incorporated

OCEAN CHIPS
Океан Электроники
Поставка электронных компонентов

Компания «Океан Электроники» предлагает заключение долгосрочных отношений при поставках импортных электронных компонентов на взаимовыгодных условиях!

Наши преимущества:

- Поставка оригинальных импортных электронных компонентов напрямую с производств Америки, Европы и Азии, а так же с крупнейших складов мира;
- Широкая линейка поставок активных и пассивных импортных электронных компонентов (более 30 млн. наименований);
- Поставка сложных, дефицитных, либо снятых с производства позиций;
- Оперативные сроки поставки под заказ (от 5 рабочих дней);
- Экспресс доставка в любую точку России;
- Помощь Конструкторского Отдела и консультации квалифицированных инженеров;
- Техническая поддержка проекта, помощь в подборе аналогов, поставка прототипов;
- Поставка электронных компонентов под контролем ВП;
- Система менеджмента качества сертифицирована по Международному стандарту ISO 9001;
- При необходимости вся продукция военного и аэрокосмического назначения проходит испытания и сертификацию в лаборатории (по согласованию с заказчиком);
- Поставка специализированных компонентов военного и аэрокосмического уровня качества (Xilinx, Altera, Analog Devices, Intersil, Interpoint, Microsemi, Actel, Aeroflex, Peregrine, VPT, Syfer, Eurofarad, Texas Instruments, MS Kennedy, Miteq, Cobham, E2V, MA-COM, Hittite, Mini-Circuits, General Dynamics и др.);

Компания «Океан Электроники» является официальным дистрибьютором и эксклюзивным представителем в России одного из крупнейших производителей разъемов военного и аэрокосмического назначения **«JONHON»**, а так же официальным дистрибьютором и эксклюзивным представителем в России производителя высокотехнологичных и надежных решений для передачи СВЧ сигналов **«FORSTAR»**.

AVIC JONHON

«JONHON» (основан в 1970 г.)

Разъемы специального, военного и аэрокосмического назначения:

(Применяются в военной, авиационной, аэрокосмической, морской, железнодорожной, горно- и нефтедобывающей отраслях промышленности)

«FORSTAR» (основан в 1998 г.)

ВЧ соединители, коаксиальные кабели, кабельные сборки и микроволновые компоненты:

(Применяются в телекоммуникациях гражданского и специального назначения, в средствах связи, РЛС, а так же военной, авиационной и аэрокосмической отраслях промышленности).

FORSTAR®

Телефон: 8 (812) 309-75-97 (многоканальный)
Факс: 8 (812) 320-03-32
Электронная почта: ocean@oceanchips.ru
Web: http://oceanchips.ru/
Адрес: 198099, г. Санкт-Петербург, ул. Калинина, д. 2, корп. 4, лит. А