Circuit Breaker for Equipment thermal, 2 pole, Rocker actuation, with undervoltage

Thermal circuit breaker
Snap-in version
Rocker actuation

Thermal circuit breaker
Snap-in version
Rocker actuation

See below:
Approvals and Compliances

Description

- Thermal circuit breaker
- 1 or 2 pole thermal overload protection
- Positively trip-free release
- High configurability
- Rocker non-illuminated or illuminated
- Snap-in version
- Quick connect terminal 6.3 x 0.8 mm or screw clamp terminal M3.5 x 6 mm (lineside P1, P2)

Applications

- Power tools
- Industrial appliances
- Power supplies

References

Alternative: Standard version TA45-2R

Weblinks

pdf data sheet, html datasheet, General Product Information, Distributor-Stock-Check, Detailed request for product, Product News

Technical Data

Rated Voltage AC	240 VAC
Rated Voltage DC	60 VDC
Rated current range AC	0.05 - 20 A
Conditional short circuit capacity Inc	IEC 60934: PC1, AC 240 V: 1 kA
Short circuit capacity Icn	IEC 60934: At In < 3 A/ 240 VAC: 10xIn (max. 3 Zykl.) At In ≥ 3 A/ 240 VAC: 300A (max. 3 Zykl.) At In < 3 A/ 60 VDC: 10xIn (max. 3 Zykl.) At In ≥ 3 A/ 48 VDC: 120A (max. 3 Zykl.)
Degree of Protection	from front side IP40 acc. to IEC 60529
Dielectric Strength	4 kVAC
Insulation Resistance	500 VDC > 100 MΩ
Lifetime	mechanical: 50'000 switching cycles
	AC: 1 x Ir: 50'000 switching cycles
	DC: 1 x Ir: 50'000 switching cycles

Overload	AC: min. 40 trips @ 6 x Ir
	DC: min. 40 trips @ 4 x Ir
Allowable Operation Temp.	-10 °C to 55 °C
Vibration Resistance	± 0.75 mm @ 5 - 60 Hz acc. to IEC 60068-2-6, test Fc 10 G @ 60 - 500 Hz acc. to IEC 60068-2-6, test Fc
Shock Resistance	30 G / 18 ms acc. to IEC 60068-2-27, test Ea
Possible Tripping Types	Thermal Undervoltage release Remote trip Mechanical lock-out latch
Actuation Type	Rocker
Weight	50 - 60 g

Approvals and Compliances

Detailed information on product approvals, code requirements, usage instructions and detailed test conditions can be looked up in Details about Approvals

SCHURTER products are designed for use in industrial environments. They have approvals from independent testing bodies according to national and international standards. Products with specific characteristics and requirements such as required in the automotive sector according to IATF 16949, medical technology according to ISO 13485 or in the aerospace industry can be offered exclusively with customer-specific, individual agreements by SCHURTER.

Approvals

The approval mark is used by the testing authorities to certify compliance with the safety requirements placed on electronic products.

Approval Reference Type: TA45

Approval Logo	Certificates	Certification Body	Description
	VDE Approvals	VDE	VDE Certificate Number: 40019880
	UL Approvals	UL	UL File Number: E71572
	CCC Approvals	CCC	CCC Certificate Number: 2020970307001847

Product standards

Product standards that are referenced

Organization	Design	Standard	Description
	Designed according to	IEC 60934	Circuit-breakers for equipment (CBE)
	Designed according to	UL 1077	Standard for Supplementary Protectors for Use in Electrical Equipment
	Designed according to	CSA C22.2 No. 235	Supplementary Protectors
	Designed according to	GB 17701	Circuit-breaker for equipment

Application standards

Application standards where the product can be used

Organization	Design	Standard	Description
	Designed for applications acc.	IEC/UL 62368-1	IEC 62368-1 includes the basic requirements for safety of audio, video, information technology and office equipment.

Compliances

The product complies with following Guide Lines

Identification	Details	Initiator	Description
	CE declaration of conformity	SCHURTER AG	The CE marking declares that the product complies with the applicable requirements laid down in the harmonisation of Community legislation on its affixing in accordance with EU Regulation 765/2008.
	RoHS	SCHURTER AG	Directive RoHS 2011/65/EU, Amendment (EU) 2015/863
	China RoHS	SCHURTER AG	The law SJ / T 11363-2006 (China RoHS) has been in force since 1 March 2007. It is similar to the EU directive RoHS.
	REACH	SCHURTER AG	On 1 June 2007, Regulation (EC) No 1907/2006 on the Registration, Evaluation, Authorization and Restriction of Chemicals 1 (abbreviated as "REACH") entered into force.

Dimension [mm]

Undervoltage release, remote trip release

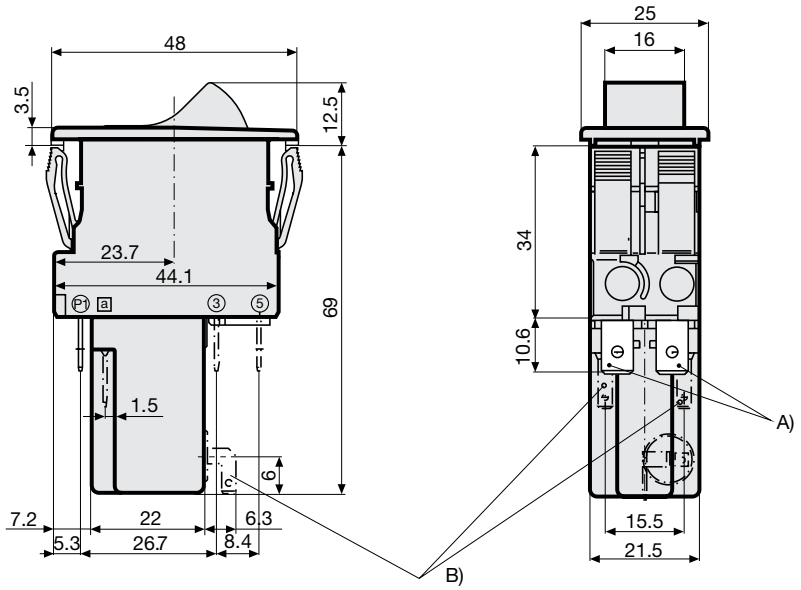

A) Quick connect terminal, IEC 61210, A6.3-0.8 mm
B) Quick connect terminal, IEC 61210, A2.8-0.8 mm

Mechanical lock-out latch

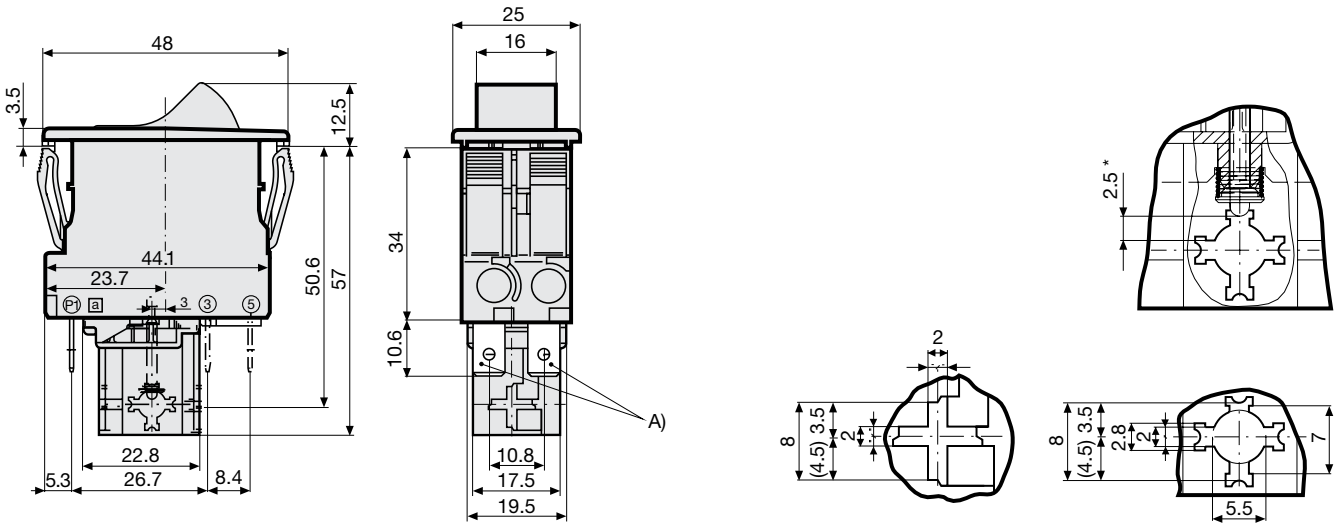

A) Quick connect terminal, IEC 61210, A6.3-0.8 mm

*) max. switching stroke

Accessories / factory mounted

AZM01 / Collar with cover, IP54

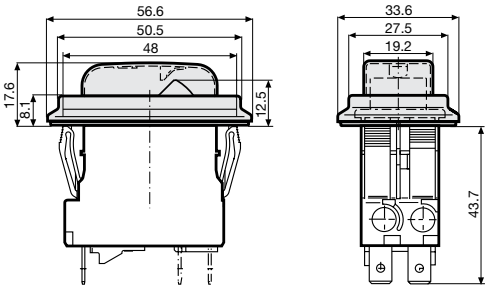

AZM02 / Raised collar with cover, narrow, IP54

AZM03 / Raised collar, IP40

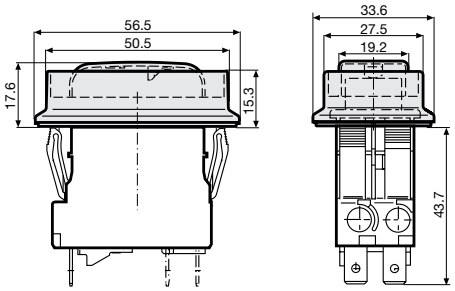

AZM10 / Collar with cover, narrow, IP54

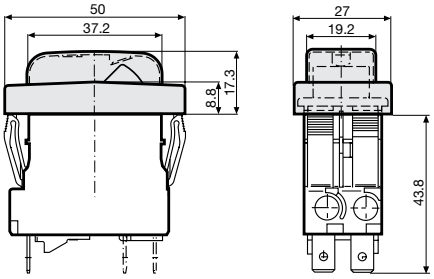

AZM11 / Partially raised collar with cover, narrow, IP54

AZM12 / Partially raised collar without cover, narrow, IP40

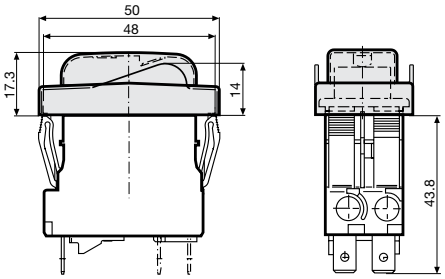

AZM13 / Raised collar narrow, IP40

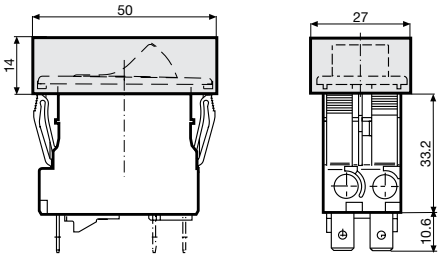

AZM14 / Raised collar with cover narrow, IP54

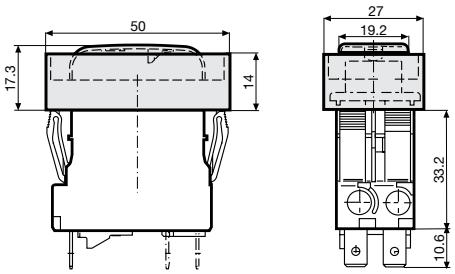

Cut-out and pin-out

Cut-out snap-in type

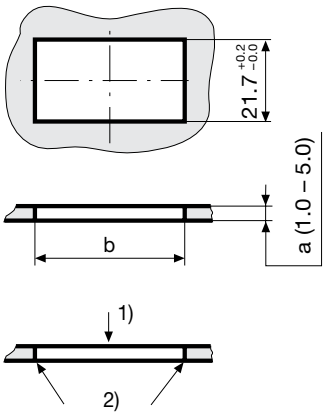

a	b
1.0	44,5...45,0
1.5	44,5...45,0
2.0	44,7...45,2
2.5	44,7...45,2
3.0	44,8...45,3
4.0	44,9...45,4
5.0	45,0...45,5

Pin-out

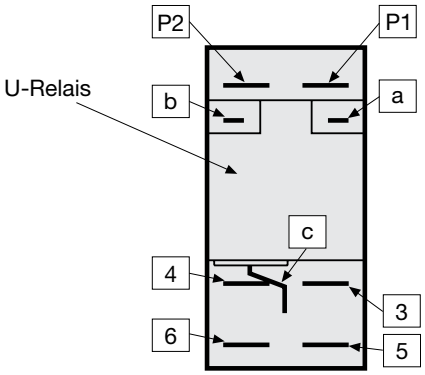

1) Assemble
2) edge must be sharp

Diagrams

1 pole thermal overload protection

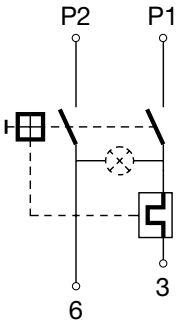

1 pole thermal overload protection, Shunt terminal

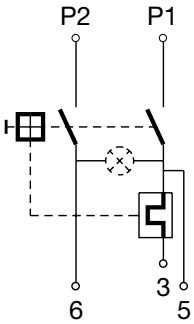

2 pole thermal overload protection

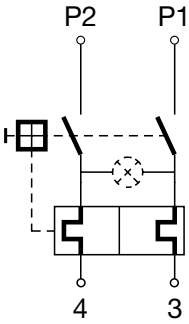

2 pole thermal overload protection, Shunt terminal

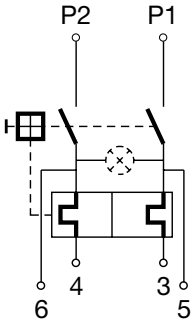

Effect of ambient temperature

The units are calibrated for an ambient temperature of +23°C. To determine the rated current for a lower or higher ambient temperature, use a correction factor (typical value) from the table below:

Ambient Temperature [°C]	Correction factor
-10	0.89
-5	0.91
0	0.92
+23	1.00
+30	1.03
+40	1.08
+55	1.16

Example: Rated current = 5 A, Environmental temperature = 40 °C, --> Correction factor = 1.08, Resulting current = 5.5 A --> Fount to next higher rated current: 6 A

Undervoltage release

Max. operating voltage							1.1 Ue
Rated operating voltage Ue	5 V	12 V	24 V	48 V	120 V	240 V	400 V[1)]
Current consumption (± 10%)	10.5 mA	16.5 mA	17.0 mA	3.2 mA	3.7 mA	3.1 mA	2.65 mA
Highest reset level							0.85 Ue
Lowest trip level							0.20 Ue
Trip delay							20 ms - 50 ms
Impulse withstand voltage (1.2 / 50 µs)							≥4 kV
1) only for 3pole							

Remote trip

Permissible impuls duration of the make contact (no)	Between terminal C and P1	unlimited
Electrical load of the make contact (no)	Current max. 12 mA / power max. 1.1 W	

Time-Current-Curves

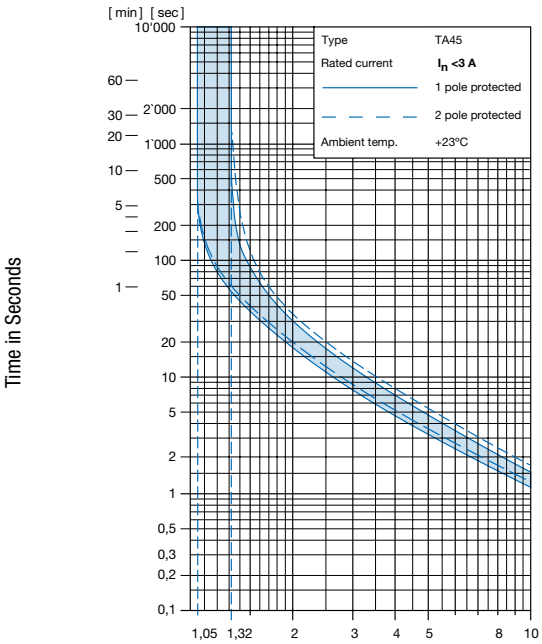

Reference Temperature +23°

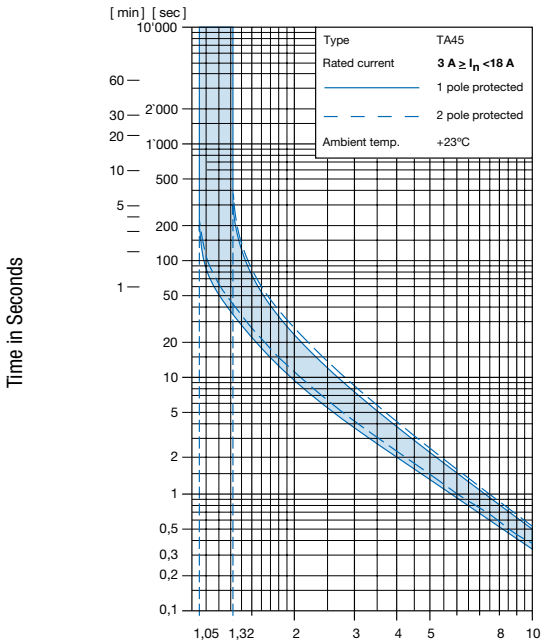

Reference Temperature +23°

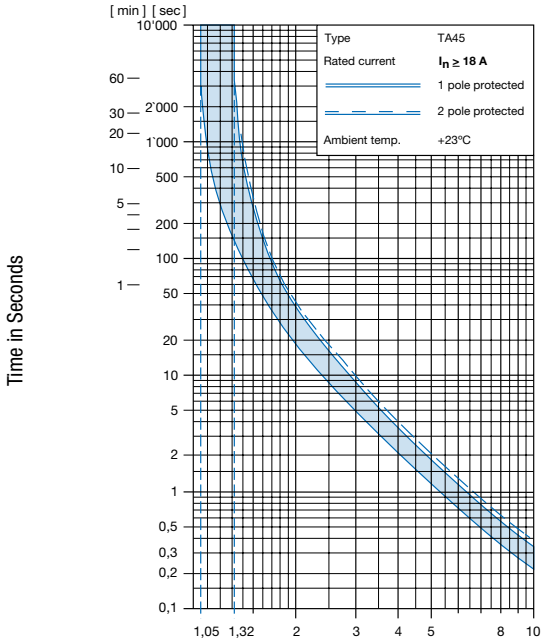

Reference Temperature +23°

Config. Code

TA45 - AK2 W F 120 A2 - AZM11

The characters are placeholders for the correspondingly keys of selections from the key tables.

TA45 - **AK2** W F 120 A2 - AZM11 = Basic function

Basic function	Configuration key
2-pole, rocker, 1pole overload protection, quick connect terminal, illuminated 220 V...240 V	A12
2-pole, rocker, 1pole overload protection, quick connect terminal, illuminated 110 V...120 V	A14
2-pole, rocker, 1pole overload protection, quick connect terminal, illuminated 20 V...26 V	A17
2-pole, rocker, 1pole overload protection, quick connect terminal, illuminated 10 V...13 V	A18
2-pole, rocker, 1pole overload protection, quick connect terminal, illuminated 4 V...7 V	A19
2-pole, rocker, 1pole overload protection, shunt terminal, quick connect terminal, illuminated 220 V...240 V	A22
2-pole, rocker, 1pole overload protection, shunt terminal, quick connect terminal, illuminated 110 V...120 V	A24
2-pole, rocker, 1pole overload protection, shunt terminal, quick connect terminal, illuminated 20 V...26 V	A27
2-pole, rocker, 1pole overload protection, shunt terminal, quick connect terminal, illuminated 10 V...13 V	A28
2-pole, rocker, 1pole overload protection, shunt terminal, quick connect terminal, illuminated 4 V...7 V	A29
2-pole, rocker, 2pole overload protection, quick connect terminal, illuminated 220 V...240 V	A32
2-pole, rocker, 2pole overload protection, quick connect terminal, illuminated 110 V...120 V	A34
2-pole, rocker, 2pole overload protection,quick connect terminal, illuminated 20 V...26 V	A37
2-pole, rocker, 2pole overload protection, quick connect terminal, illuminated 10 V...13 V	A38

Basic function	Configuration key
2-pole, rocker, 2pole overload protection, quick connect terminal, illuminated 4 V...7 V	A39
2-pole, rocker, 2pole overload protection, shunt terminal, quick connect terminal, illuminated 220 V...240 V	A42
2-pole, rocker, 2pole overload protection, shunt terminal, quick connect terminal, illuminated 110 V...120 V	A44
2-pole, rocker, 2pole overload protection, shunt terminal, quick connect terminal, illuminated 20 V...26 V	A47
2-pole, rocker, 2pole overload protection, shunt terminal, quick connect terminal, illuminated 10 V...13 V	A48
2-pole, rocker, 2pole overload protection, shunt terminal, quick connect terminal, illuminated 4 V...7 V	A49
2-pole, rocker, 1pole overload protection, screw connection, illuminated 220 V...240 V	A62
2-pole, rocker, 1pole overload protection, screw connection, illuminated 110 V...120 V	A64
2-pole, rocker, 1pole overload protection, screw connection, illuminated 20 V...26 V	A67
2-pole, rocker, 1pole overload protection, screw connection, illuminated 10 V...13 V	A68
2-pole, rocker, 1pole overload protection, screw connection, illuminated 4 V...7 V	A69
2-pole, rocker, 1pole overload protection, shunt terminal, screw connection, illuminated 220 V...240 V	A72
2-pole, rocker, 1pole overload protection, shunt terminal, screw connection, illuminated 110 V...120 V	A74
2-pole, rocker, 1pole overload protection, shunt terminal, screw connection, illuminated 20 V...26 V	A77
2-pole, rocker, 1pole overload protection, shunt terminal, screw connection, illuminated 10 V...13 V	A78

Basic function	Configuration key
2-pole, rocker, 1pole overload protection, shunt terminal, screw connection, illuminated 4 V...7 V	A79
2-pole, rocker, 2pole overload protection, screw connection, illuminated 220 V...240 V	A82
2-pole, rocker, 2pole overload protection, screw connection, illuminated 110 V...120 V	A84
2-pole, rocker, 2pole overload protection, screw connection, illuminated 20 V...26 V	A87
2-pole, rocker, 2pole overload protection, screw connection, illuminated 10 V...13 V	A88
2-pole, rocker, 2pole overload protection, screw connection, illuminated 4 V...7 V	A89
2-pole, rocker, 2pole overload protection, shunt terminal, screw connection, illuminated 220 V...240 V	A92
2-pole, rocker, 2pole overload protection, shunt terminal, screw connection, illuminated 110 V...120 V	A94
2-pole, rocker, 2pole overload protection, shunt terminal, screw connection, illuminated 20 V...26 V	A97
2-pole, rocker, 2pole overload protection, shunt terminal, screw connection, illuminated 10 V...13 V	A98
2-pole, rocker, 2pole overload protection, shunt terminal, screw connection, illuminated 4 V...7 V	A99
2-pole, rocker, 2pole overload protection, quick connect terminal, without illumination	ABD
2-pole, rocker, 1pole overload protection, shunt terminal, quick connect terminal, without illumination	ABF
2-pole, rocker, 2pole overload protection, shunt terminal, quick connect terminal, without illumination	ABG
2-pole, rocker, 1pole overload protection, quick connect terminal, without illumination	ABT
2-pole, rocker, 2pole overload protection, quick connect terminal, momentary switch, without illumination	AED
2-pole, rocker, 1pole overload protection, shunt terminal, quick connect terminal, momentary switch, without illumination	AEF
2-pole, rocker, 2pole overload protection, shunt terminal, quick connect terminal, momentary switch, without illumination	AEG
2-pole, rocker, 1pole overload protection, quick connect terminal, momentary switch, without illumination	AET
2-pole, rocker, 2pole overload protection, screw connection, without illumination	AHD
2-pole, rocker, 1pole overload protection, shunt terminal, screw connection, without illumination	AHF
2-pole, rocker, 2pole overload protection, shunt terminal, screw connection, without illumination	AHG
2-pole, rocker, 1pole overload protection, screw connection, without illumination	AHT
2-pole, rocker, 2pole overload protection, screw connection, momentary switch, without illumination	AJD
2-pole, rocker, 1pole overload protection, shunt terminal, screw connection, momentary switch, without illumination	AJF
2-pole, rocker, 2pole overload protection, shunt terminal, screw connection, momentary switch, without illumination	AJG
2-pole, rocker, 1pole overload protection, screw connection, momentary switch, without illumination	AJT

TA45 - AK2 **W** F 120 A2 - AZM11 = Actuator colour

Actuator colour	Configuration key
Clear transparent	1
Red transparent	3
Green transparent	4
Orange transparent	6
Black	B
Green	G
Red	R
White	W
Orange	X
Yellow	Y

TA45 - AK2 W **F** 120 A2 - AZM11 = Legend

Legend		Configuration key
embossed	– 0	F
white printed	ON OFF	H
black printed	ON OFF	K
white printed	– 0	L
black printed	– 0	M
white printed	I 0	P
black printed	I 0	R
white printed	ON I 0 OFF	S
black printed	ON I 0 OFF	T

TA45 - AK2 W F **120** A2 - AZM11 = Rated current

Rated current	Configuration key
0.05 A	Z05
0.1 A	J01
0.2 A	J02
0.3 A	J03
0.4 A	J04
0.5 A	J05
0.6 A	J06
0.7 A	J07
0.8 A	J08
0.9 A	J09
1.0 A	J10
1.1 A	J11
1.2 A	J12
1.3 A	J13
1.4 A	J14
1.5 A	J15
1.6 A	J16
1.7 A	J17
1.8 A	J18
1.9 A	J19
2.0 A	J20
2.1 A	J21

Other rated currents on request

Rated current	Configuration key
2.2 A	J22
2.3 A	J23
2.5 A	J25
2.8 A	J28
3.0 A	030
3.5 A	035
4.0 A	040
4.5 A	045
5.0 A	050
6.0 A	060
6.5 A	065
7.0 A	070
7.5 A	075
8.0 A	080
9.0 A	090
10.0 A	100
11.0 A	110
12.0 A	120
13.0 A	130
14.0 A	140
15.0 A	150
16.0 A	160
17.0 A	170
18.0 A	180
19.0 A	190
20.0 A	200

Other rated currents on request

TA45 - AK2 W F 120 **A2** - AZM11 **= Release / lock-out latch**

Release / lock-out latch	Configuration key
Remote trip release, rated voltage 240 V AC	A2
Remote trip release, rated voltage 230 V AC	A3
Remote trip release, rated voltage 120 V AC	A4
Remote trip release, rated voltage 48 V AC / DC	A6
Remote trip release, rated voltage 24 V AC / DC	A7
Remote trip release, rated voltage 12 V AC / DC	A8

Release / lock-out latch	Configuration key
whithout release / lock-out latch	C0
Undervoltage release with additional contact, rated voltage 240 V AC	E2
Undervoltage release with additional contact, rated voltage 230 V AC	E3
Undervoltage release with additional contact, rated voltage 120 V AC	E4
Undervoltage release with additional contact, rated voltage 48 V AC / DC	E6
Undervoltage release with additional contact, rated voltage 24 V AC / DC	E7
Undervoltage release with additional contact, rated voltage 12 V AC / DC	E8
Undervoltage release with additional contact, rated voltage 5 V AC / DC	E9
Mechanical lock-out latch	S0
Undervoltage release, rated voltage 240 V AC	U2
Undervoltage release, rated voltage 230 V AC	U3
Undervoltage release, rated voltage 120 V AC	U4
Undervoltage release, rated voltage 48 V AC / DC	U6
Undervoltage release, rated voltage 24 V AC / DC	U7
Undervoltage release, rated voltage 12 V AC / DC	U8
Undervoltage release, rated voltage 5 V AC / DC	U9
Undervoltage release with 2 additional contacts, rated voltage 240 V AC	Z2
Undervoltage release with 2 additional contacts, rated voltage 230 V AC	Z3
Undervoltage release with 2 additional contacts, rated voltage 120 V AC	Z4
Undervoltage release with 2 additional contacts, rated voltage 48 V AC / DC	Z6
Undervoltage release with 2 additional contacts, rated voltage 24 V AC / DC	Z7
Undervoltage release with 2 additional contacts, rated voltage 12 V AC / DC	Z8
Undervoltage release with 2 additional contacts, rated voltage 5 V AC / DC	Z9

TA45 - AK2 W F 120 A2 - **AZM11** **= Accessories**

Factory mounted accessories	Configuration key
Without cover	
Collar with cover, IP54	AZM01
Raised collar with cover, IP54	AZM02
Raised collar, IP40	AZM03
Raised collar with cover narrow, IP54	AZM10
Partially raised collar with cover, narrow, IP54	AZM11
Partially raised collarwithout cover, narrow, IP40	AZM12
Raised collar narrow, IP40	AZM13
Raised collar with cover narrow, IP54	AZM14

For subsequent fitting accessories see:

https://www.schurter.com/pdf/english/typ_TA45-ACC.pdf

Variants

Thermal overload protection	Addition	connection type	Illumination	Actuator colour	Legend	Rated current	Accessories	Config. Code	Order Number
2-pole		Quick connect terminal	without illumination	White	black printed	5.0 A	Without cover	TA45-ABDWK050U3	4430.1564
2-pole		Quick connect terminal	illumination 220 V...240 V	Orange transparent	white printed	4.0 A	Collar with cover, IP54	TA45-A326L040U2-AZM01	4430.2609
1-pole		Quick connect terminal	without illumination	Yellow	black printed	8.0 A	Raised collar with cover narrow, IP54	TA45-ABTYK080E3-AZM10	4430.2960
1-pole		Quick connect terminal	without illumination	Orange	black printed	8.0 A	Without cover	TA45-ABTXM080E2	4430.3240

Most Popular.

Thermal overload protection	Addition	connection type	Illumination	Actuator colour	Legend	Rated current	Accessories	Config. Code	Order Number

Availability for all products can be searched real-time:https://www.schurter.com/en/Stock-Check/Stock-Check-SCHURTER

Packaging Unit

1 Pcs

Accessories

	Description
	TA45-ACC Accessories to TA45

26.06.2020

The specifications, descriptions and illustrations indicated in this document are based on current information. All content is subject to modifications and amendments. Information furnished is believed to be accurate and reliable. However, users should independently evaluate the suitability and test each product selected for their own applications.

OCEAN CHIPS
Океан Электроники
Поставка электронных компонентов

Компания «Океан Электроники» предлагает заключение долгосрочных отношений при поставках импортных электронных компонентов на взаимовыгодных условиях!

Наши преимущества:

- Поставка оригинальных импортных электронных компонентов напрямую с производств Америки, Европы и Азии, а так же с крупнейших складов мира;
- Широкая линейка поставок активных и пассивных импортных электронных компонентов (более 30 млн. наименований);
- Поставка сложных, дефицитных, либо снятых с производства позиций;
- Оперативные сроки поставки под заказ (от 5 рабочих дней);
- Экспресс доставка в любую точку России;
- Помощь Конструкторского Отдела и консультации квалифицированных инженеров;
- Техническая поддержка проекта, помощь в подборе аналогов, поставка прототипов;
- Поставка электронных компонентов под контролем ВП;
- Система менеджмента качества сертифицирована по Международному стандарту ISO 9001;
- При необходимости вся продукция военного и аэрокосмического назначения проходит испытания и сертификацию в лаборатории (по согласованию с заказчиком);
- Поставка специализированных компонентов военного и аэрокосмического уровня качества (Xilinx, Altera, Analog Devices, Intersil, Interpoint, Microsemi, Actel, Aeroflex, Peregrine, VPT, Syfer, Eurofarad, Texas Instruments, MS Kennedy, Miteq, Cobham, E2V, MA-COM, Hittite, Mini-Circuits, General Dynamics и др.);

Компания «Океан Электроники» является официальным дистрибьютором и эксклюзивным представителем в России одного из крупнейших производителей разъемов военного и аэрокосмического назначения **«JONHON»**, а так же официальным дистрибьютором и эксклюзивным представителем в России производителя высокотехнологичных и надежных решений для передачи СВЧ сигналов **«FORSTAR»**.

AVIC JONHON

«JONHON» (основан в 1970 г.)

Разъемы специального, военного и аэрокосмического назначения:

(Применяются в военной, авиационной, аэрокосмической, морской, железнодорожной, горно- и нефтедобывающей отраслях промышленности)

«FORSTAR» (основан в 1998 г.)

ВЧ соединители, коаксиальные кабели, кабельные сборки и микроволновые компоненты:

(Применяются в телекоммуникациях гражданского и специального назначения, в средствах связи, РЛС, а так же военной, авиационной и аэрокосмической отраслях промышленности).

FORSTAR®

Телефон: 8 (812) 309-75-97 (многоканальный)
Факс: 8 (812) 320-03-32
Электронная почта: ocean@oceanchips.ru
Web: http://oceanchips.ru/
Адрес: 198099, г. Санкт-Петербург, ул. Калинина, д. 2, корп. 4, лит. А