Data Sheet | August 2004 | FN4516.3

Low Cost Dual Power Distribution Controller

The HIP1013 is a low cost HOT SWAP dual supply power distribution controller. Two external N-Channel MOSFETs are driven to distribute power while providing load fault isolation. At turn-on, the gate of each external N-Channel MOSFET is charged with a 10µA current source. Capacitors on each gate (see the Typical Application Diagram), create a programmable ramp (soft turn-on) to control inrush currents. A built in charge pump supplies the gate drive for the 12V supply N-Channel MOSFET switch.

Over current protection is facilitated by two external current sense resistors. When the current through either resistor exceeds the user programmed value the N-Channel MOSFETs are latched off by the HIP1013. The controller is reset by a rising edge on either $\overline{\text{PWRON}}$ pin.

Choosing the voltage selection mode the HIP1013 controls either +12V/5V or +3.3V/+5V supplies.

Although pin compatible with the HIP1012 device, the HIP1013 does not offer current regulation during an OC event.

Ordering Information

PART NUMBER	TEMP. RANGE (°C)	PACKAGE	PKG. DWG. #
HIP1013CB	-0 to 70	14 Ld SOIC	M14.15
HIP1013CBZA (Note)	-0 to 70	14 Ld SOIC (Pb-free)	M14.15

NOTE: Intersil Pb-free products employ special Pb-free material sets; molding compounds/die attach materials and 100% matte tin plate termination finish, which is compatible with both SnPb and Pb-free soldering operations. Intersil Pb-free products are MSL classified at Pb-free peak reflow temperatures that meet or exceed the Pb-free requirements of IPC/JEDEC J Std-020B.

*Tape & Reel packaging available with "-T" suffix..

Pinout

HIP1013 (SOIC)
TOP VIEW

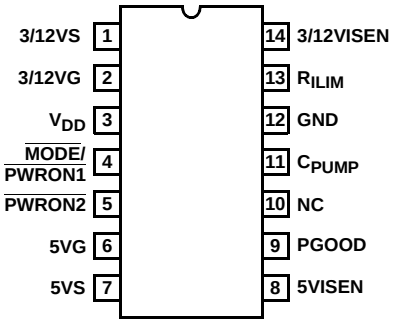

Features

- HOT SWAP Dual Power Distribution Control for +5V and +12V or +5V and +3.3V
- Provides Fault Isolation
- Charge Pump Allows the Use of N-Channel MOSFETs
- Redundant Power On Controls
- Power Good and Over Current Latch Indicators
- Adjustable Turn-On Ramp
- Protection During Turn-On
- Pb-free Available

Applications

- Power Distribution Control
- Hot Plug™ Components

Typical Application Diagram

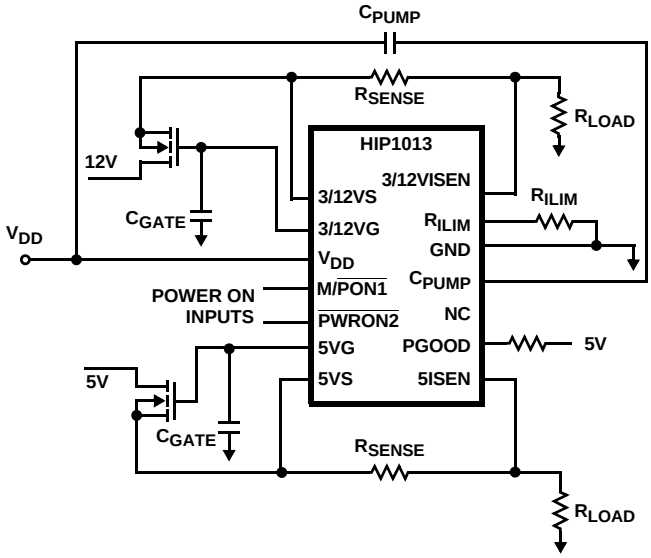

CAUTION: These devices are sensitive to electrostatic discharge; follow proper IC Handling Procedures.
1-888-INTERSIL or 321-724-7143 | Intersil (and design) is a trademark of Intersil Americas Inc.
Copyright Intersil Americas Inc. 1998, 1999, 2004. All Rights Reserved
Hot Plug™ is a trademark of Core International, Inc. All other trademarks mentioned are the property of their respective owners.

Functional Diagram

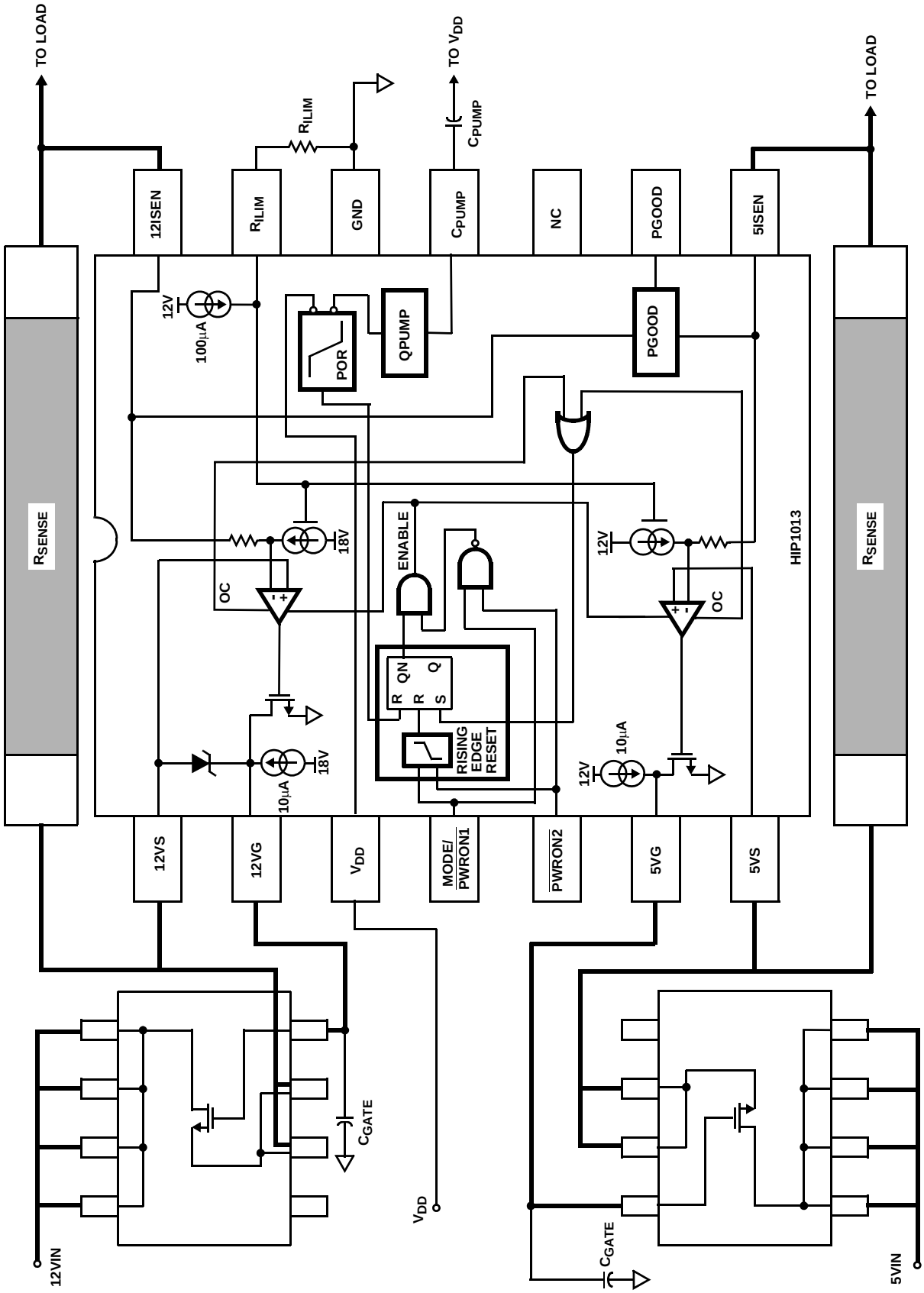

Pin Description

PIN NO.	SYMBOL	FUNCTION	DESCRIPTION
1	12VS	12V Source	Connect to source of associated external N-Channel MOSFET switch to sense output voltage.
2	12VG	12V Gate	Connect to the gate of associated N-Channel MOSFET switch. A capacitor from this node to ground sets the turn-on ramp. At turn-on this capacitor will be charged to ≈17.4V by a 10µA current source when in 5V/12V mode of operation, otherwise capacitor will be charged to ≈11.4V.
3	V_{DD}	Chip Supply	Connect to 12V supply. This can be either connected directly to the +12V rail supplying the load voltage or to a dedicated V_{DD} +12V supply.
4	MODE/ $\overline{\text{PWRON1}}$	Power ON/ Reset invokes 3.3V operation when shorted to V_{DD}, Pin 3.	$\overline{\text{PWRON1}}$ and $\overline{\text{PWRON2}}$ are used to turn-on and reset the chip. Both outputs turn-on when either pin is driven low. After an over current limit fault, the chip is reset by the rising edge of a reset signal applied to either $\overline{\text{PWRON}}$ pin. Each input has 100µA pull up capability which is compatible with 3V and 5V open drain and standard logic. $\overline{\text{PWRON1}}$ is also used to invoke 3.3V control operation in preference to +12V control. By tying pin 4 to pin 3 the charge pump is disabled and the UV threshold also shifts to ≈2.8V.
5	$\overline{\text{PWRON2}}$	Power ON/Reset	
6	5VG	5V Gate	Connect to the gate of the external 5V N-Channel MOSFET. A capacitor from this node to ground sets the turn-on ramp. At turn-on this capacitor will be charged to ≈11.4V by a 10µA current source.
7	5VS	5V Source	Connect to the source side of 5V external N-Channel MOSFET switch to sense output voltage.
8	5VISEN	5V Current Sense	Connect to the load side of the 5V sense resistor to measure the voltage drop across this resistor between 5VS and 5VISEN pins.
9	PGOOD	Power Good Indicator	PGOOD is driven by an open drain N-Channel MOSFET. It is pulled low when either output voltage is not within specification or and OC condition exists.
10			No Connection.
11	C_{PUMP}	Charge Pump Capacitor	Connect a 0.1µF capacitor between this pin and V_{DD} (Pin 3).
12	GND	Chip Ground	
13	R_{ILIM}	Current Limit Set Resistor	A resistor connected between this pin and ground determines the current level at which current limit is activated. This current is determined by the ratio of the R_{ILIM} resistor to the sense resistor (R_{SENSE}). The current at current limit onset is equal to 10µA x (R_{ILIM}/R_{SENSE}).
14	12VISEN	12V Current Sense	Connect to the load side of sense resistor to measure the voltage drop across this resistor.

Absolute Maximum Ratings T_A = 25°C

V_{DD} . . . . . -0.3V to +17V
3/12VG, C_{PUMP}. . . . . -0.3V to 25V
3/12VISEN, 3/12VS . . . . . -5V to V_{DD} + 0.3V
5VISEN, 5VS . . . . . -5V to 7.5V
PGOOD, R_{ILIM}. . . . . -0.3V to 7.5V
MODE/$\overline{PWRON1}$, $\overline{PWRON2}$, 5VG . . . . . -0.3V to V_{DD} + 0.3V
ESD Classification . . . . . 2kV (Class 2)

Thermal Information

Thermal Resistance (Typical, Note 1) θ_{JA} (°C/W)
SOIC Package 120
Maximum Junction Temperature (Plastic Package) . . . . . 150°C
Maximum Storage Temperature Range . . . . . -65°C to 150°C
Maximum Lead Temperature (Soldering 10s) . . . . . 300°C
(SOIC - Lead Tips Only)

Operating Conditions

V_{DD} Supply Voltage Range . . . . . +10.5V to +16V
Temperature Range (T_A) . . . . . 0°C to 70°C

CAUTION: Stresses above those listed in "Absolute Maximum Ratings" may cause permanent damage to the device. This is a stress only rating and operation of the device at these or any other conditions above those indicated in the operational sections of this specification is not implied.

NOTES:

1. θ_{JA} is measured with the component mounted on an evaluation PC board in free air.
2. All voltages are relative to GND, unless otherwise specified.

Electrical Specifications

V_{DD} = 12V, C_{VG} = 0.01µF, R_{SENSE} = 0.1Ω, C_{BULK} = 220µF, ESR = 0.5Ω, T_A = T_J = 0°C to 70°C, Unless Otherwise Specified

PARAMETER	SYMBOL	TEST CONDITIONS	MIN	TYP	MAX	UNITS
CONTROL SECTION						
Current Limit Threshold Voltage (Voltage Across Sense Resistor)	V_{IL}	R_{ILIM} = 10kΩ	85	100	115	mV
Over Current Limit Response Time	OC_{Lrt}	Current Overload, R_{ILIM} = 10kΩ, R_{SHORT} = 6.0Ω	-	2	-	µs
Response Time To Dead Short	RT_{SHORT}	C_{VG} = 0.01µF	-	500	1000	ns
12V Gate Turn-On Time	t_{ON12V}	C_{VG} = 0.01µF	-	12	-	ms
5V Gate Turn-On Time	t_{ON5V}	C_{VG} = 0.01µF	-	5	-	ms
Gate Turn-On Current	I_{ON}	C_{VG} = 0.01µF	8	10	12	µA
12V Under Voltage Threshold	$12V_{VUV}$		10.5	10.8	11.0	V
5V Under Voltage Threshold	$5V_{VUV}$		4.35	4.5	4.65	V
3.3V Under Voltage Threshold	$3.3V_{VUV}$		2.65	2.8	2.95	V
Charge pumped 12VG Voltage	V12VG	C_{PUMP} = 0.1µF	16.8	17.3	17.9	V
3/5VG High Voltage	3/5VG		11.2	11.9	-	V
SUPPLY CURRENT AND IO SPECIFICATIONS						
V_{DD} Supply Current	I_{VDD}		4	8	10	mA
V_{DD} POR Rising Threshold	POR_{rvth}		9.5	10.0	10.5	V
V_{DD} POR Falling Threshold	POR_{fvth}		9.3	9.8	10.3	V
$\overline{PWRON}$ Pull-up Voltage	PWRN_V	$\overline{PWRON}$ pins open	1.8	2.4	3.2	V
$\overline{PWRON}$ Rising Threshold	PWR_Vth		1.1	1.5	2	V
$\overline{PWRON}$ Hysteresis	PWR_hys		0.1	0.2	0.3	V
$\overline{PWRON}$ Pull-Up Current	PWRN_I		60	80	100	µA
R_{ILIM} Pin Current Source Output	R_{ILIM}_Io		90	100	110	µA
Charge Pump Output Current	Qpmp_Io	C_{PUMP} = 0.1µF, C_{PUMP} = 16V	400	590	800	µA
Charge Pump Output Voltage	Qpmp_Vo	No load	17.2	17.4	-	V
Charge Pump Output Voltage - Loaded	Qpmp_VIo	Load current = 100µA	16.2	16.7	-	V
Charge Pump POR Rising Threshold	Qpmp+Vth		15.6	16	16.5	V
Charge Pump POR Falling Threshold	Qpmp-Vth		15.2	15.7	16.2	V

Typical Performance Curves

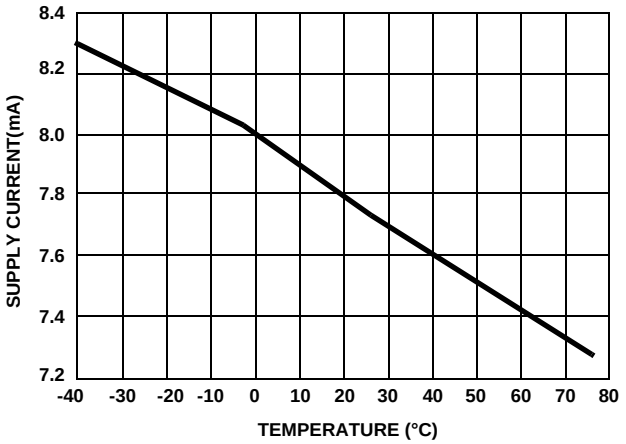

FIGURE 1. SUPPLY CURRENT

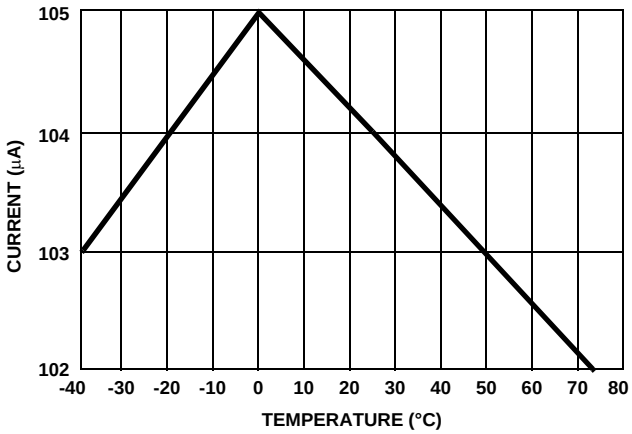

FIGURE 2. R_{ILIM} SOURCE CURRENT

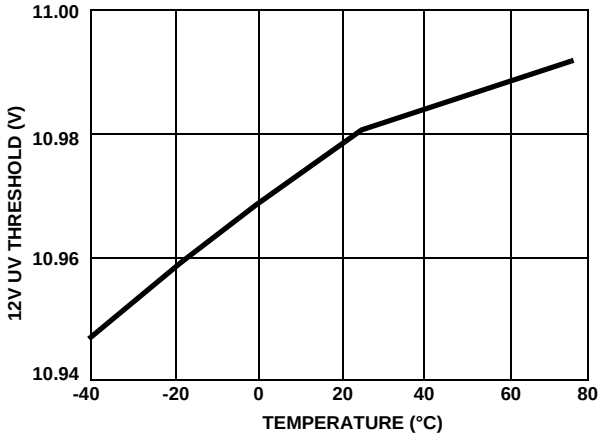

FIGURE 3. 12V UV THRESHOLD

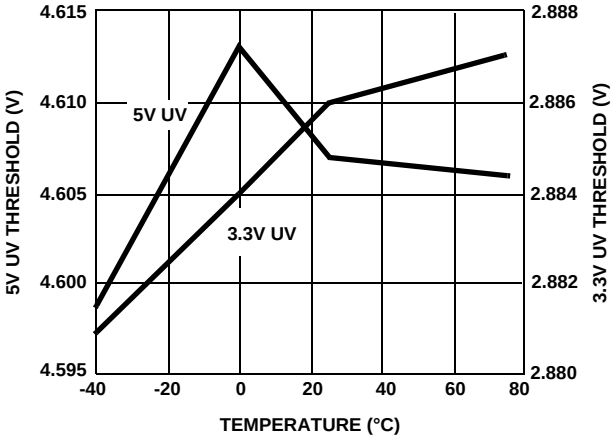

FIGURE 4. 3.3V/5V UV THRESHOLD

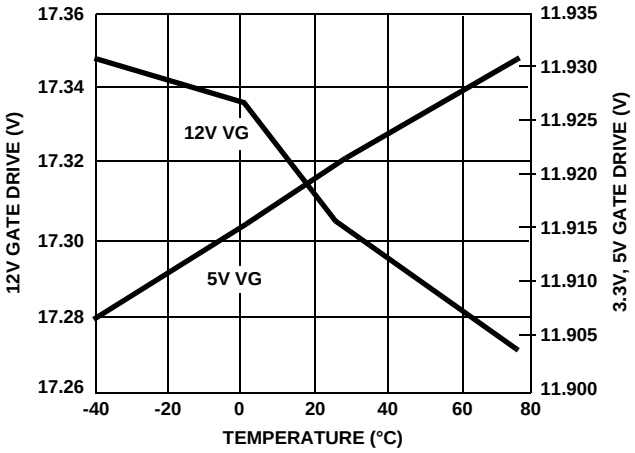

FIGURE 5. 12V, 5V GATE DRIVE

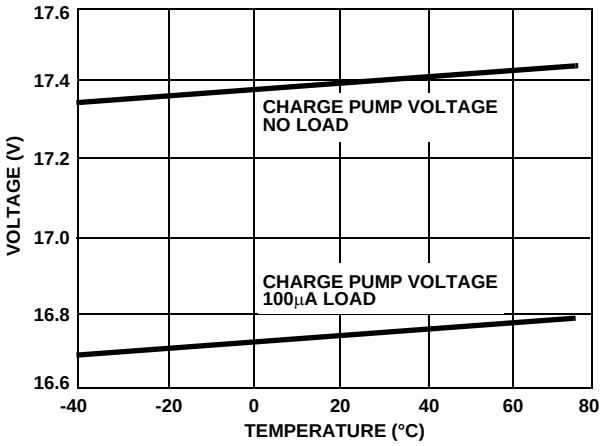

FIGURE 6. CHARGE PUMP VOLTAGE

Typical Performance Curves (Continued)

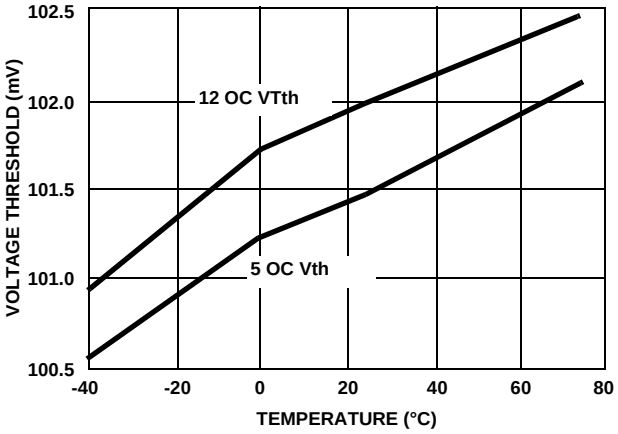

FIGURE 7. OC VOLTAGE THRESHOLD WITH = R_{ILIM} 10kΩ

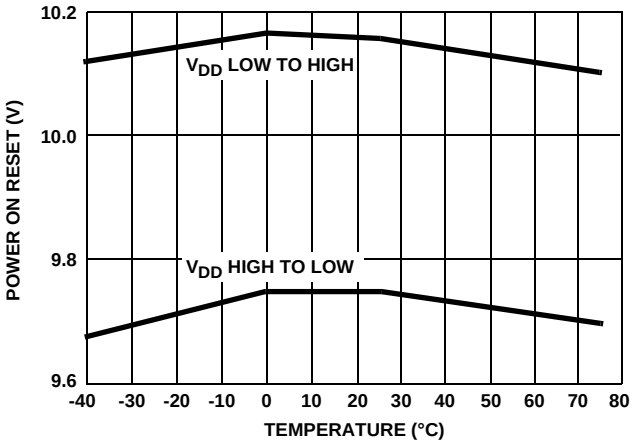

FIGURE 8. POWER ON RESET VOLTAGE THRESHOLD

HIP1013 Description and Operation

The HIP1013 offers the designer a cost efficient 5V and 12V true hot plug controller. This device drives two external N-Channel MOSFET switches and uses a charge pump to provide ≈17V to drive the gate of the 12V supply switch. The HIP1013 features Over Current (OC) programing with a single external resistor, R_{ILIM} and during turn-on, the gate capacitor of each external N-Channel MOSFET is charged with a 10µA current source. These capacitors create a programmable ramp (soft turn-on).

Upon initial power up, the HIP1013 can either isolate the voltage supply from the load by holding the external N-Channel MOSFET switches off or apply the supply rail voltage directly to the load for true hot swap capability. In either case the HIP1013 turns on in a soft start mode protecting the supply rail from sudden current loading.

The load currents pass through two external current sense resistors. When the voltage across either resistor exceeds the user programmed Over Current (OC) voltage threshold value, (see Table 1) the HIP1013 controller turns both N-Channel MOSFETs off in ≈ 2µs.

TABLE 1.

R_{ILIM} RESISTOR	NOMINAL OC VTH
15K	150mv
10K	100mV
7.5K	75mV
4.99K	50mV

NOTE: Nominal OC Vth = R_{ILIM} x 10 µA

The HIP1013 is reset by a rising edge on either $\overline{PWRON}$ pin and is turned on by either $\overline{PWRON}$ pin being driven low. The HIP1013 can control either +12V/5V or +3.3V/+5V supplies. Tying the $\overline{PWRON1}$ pin to V_{DD}, invokes the +3.3V/+5V voltage mode. In this mode, the external charge pump capacitor is not needed and C_{PUMP}, pin 11 is also tied directly to V_{DD}. Upon any OC or Under Voltage (UV) condition the PGOOD fault indicating signal will pull low when tied high through a resistor to the logic supply.

HIP1013 Application Considerations

There is no unique and specific HIP1013 application evaluation board. Since the HIP1013 is pin compatible with the HIP1012 device, you can substitute a HIP1013 for the existing HIP1012 in either of the HIP1012EVAl1 or EVAL2 boards. Otherwise contact your Intersil Corporation sales office and an already modified board will be provided. Although pin compatible to the HIP1012, the HIP1013 is a less featured dual power supply distribution controller and does not include programmable current limiting regulation and delay time to latch off.

Random resets can also occur if the HIP1013 (PINS 8 and 14) sense pins are pulled below ground when turning off a highly inductive load. Place a large load capacitor (10-50µF) on the output to eliminate unintended resets.

Physical layout of R_{SENSE} resistors is critical to avoid the possibility of false over current occurrences. Ideally trace routing between the R_{SENSE} resistors and the HIP1013 VS and VISEN pins are direct and as short as possible with zero current in the sense lines.

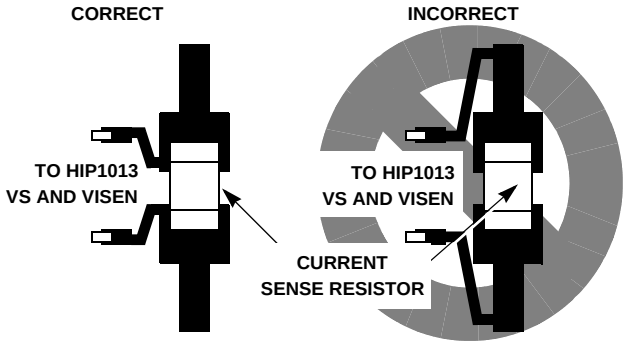

Small Outline Plastic Packages (SOIC)

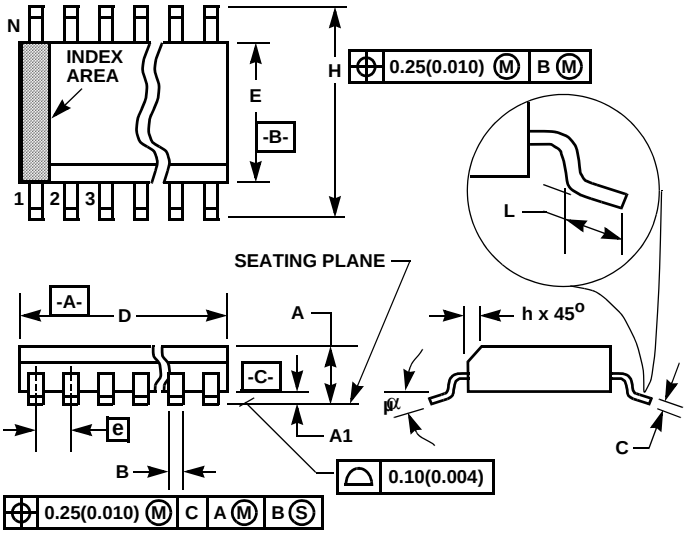

NOTES:

1. Symbols are defined in the “MO Series Symbol List” in Section 2.2 of Publication Number 95.
2. Dimensioning and tolerancing per ANSI Y14.5M-1982.
3. Dimension “D” does not include mold flash, protrusions or gate burrs. Mold flash, protrusion and gate burrs shall not exceed 0.15mm (0.006 inch) per side.
4. Dimension “E” does not include interlead flash or protrusions. Interlead flash and protrusions shall not exceed 0.25mm (0.010 inch) per side.
5. The chamfer on the body is optional. If it is not present, a visual index feature must be located within the crosshatched area.
6. “L” is the length of terminal for soldering to a substrate.
7. “N” is the number of terminal positions.
8. Terminal numbers are shown for reference only.
9. The lead width “B”, as measured 0.36mm (0.014 inch) or greater above the seating plane, shall not exceed a maximum value of 0.61mm (0.024 inch).
10. Controlling dimension: MILLIMETER. Converted inch dimensions are not necessarily exact.

M14.15 **(JEDEC MS-012-AB ISSUE C)**
14 LEAD NARROW BODY SMALL OUTLINE PLASTIC PACKAGE

SYMBOL	INCHES		MILLIMETERS		NOTES
	MIN	MAX	MIN	MAX	
A	0.0532	0.0688	1.35	1.75	-
A1	0.0040	0.0098	0.10	0.25	-
B	0.013	0.020	0.33	0.51	9
C	0.0075	0.0098	0.19	0.25	-
D	0.3367	0.3444	8.55	8.75	3
E	0.1497	0.1574	3.80	4.00	4
e	0.050 BSC		1.27 BSC		-
H	0.2284	0.2440	5.80	6.20	-
h	0.0099	0.0196	0.25	0.50	5
L	0.016	0.050	0.40	1.27	6
N	14		14		7
α	0°	8°	0°	8°	-

Rev. 0 12/93

All Intersil U.S. products are manufactured, assembled and tested utilizing ISO9000 quality systems.
Intersil Corporation’s quality certifications can be viewed at www.intersil.com/design/quality

Intersil products are sold by description only. Intersil Corporation reserves the right to make changes in circuit design, software and/or specifications at any time without notice. Accordingly, the reader is cautioned to verify that data sheets are current before placing orders. Information furnished by Intersil is believed to be accurate and reliable. However, no responsibility is assumed by Intersil or its subsidiaries for its use; nor for any infringements of patents or other rights of third parties which may result from its use. No license is granted by implication or otherwise under any patent or patent rights of Intersil or its subsidiaries.

For information regarding Intersil Corporation and its products, see www.intersil.com

OCEAN CHIPS
Океан Электроники
Поставка электронных компонентов

Компания «Океан Электроники» предлагает заключение долгосрочных отношений при поставках импортных электронных компонентов на взаимовыгодных условиях!

Наши преимущества:

- Поставка оригинальных импортных электронных компонентов напрямую с производств Америки, Европы и Азии, а так же с крупнейших складов мира;
- Широкая линейка поставок активных и пассивных импортных электронных компонентов (более 30 млн. наименований);
- Поставка сложных, дефицитных, либо снятых с производства позиций;
- Оперативные сроки поставки под заказ (от 5 рабочих дней);
- Экспресс доставка в любую точку России;
- Помощь Конструкторского Отдела и консультации квалифицированных инженеров;
- Техническая поддержка проекта, помощь в подборе аналогов, поставка прототипов;
- Поставка электронных компонентов под контролем ВП;
- Система менеджмента качества сертифицирована по Международному стандарту ISO 9001;
- При необходимости вся продукция военного и аэрокосмического назначения проходит испытания и сертификацию в лаборатории (по согласованию с заказчиком);
- Поставка специализированных компонентов военного и аэрокосмического уровня качества (Xilinx, Altera, Analog Devices, Intersil, Interpoint, Microsemi, Actel, Aeroflex, Peregrine, VPT, Syfer, Eurofarad, Texas Instruments, MS Kennedy, Miteq, Cobham, E2V, MA-COM, Hittite, Mini-Circuits, General Dynamics и др.);

Компания «Океан Электроники» является официальным дистрибьютором и эксклюзивным представителем в России одного из крупнейших производителей разъемов военного и аэрокосмического назначения **«JONHON»**, а так же официальным дистрибьютором и эксклюзивным представителем в России производителя высокотехнологичных и надежных решений для передачи СВЧ сигналов **«FORSTAR»**.

AVIC JONHON

«JONHON» (основан в 1970 г.)

Разъемы специального, военного и аэрокосмического назначения:

(Применяются в военной, авиационной, аэрокосмической, морской, железнодорожной, горно- и нефтедобывающей отраслях промышленности)

«FORSTAR» (основан в 1998 г.)

ВЧ соединители, коаксиальные кабели, кабельные сборки и микроволновые компоненты:

(Применяются в телекоммуникациях гражданского и специального назначения, в средствах связи, РЛС, а так же военной, авиационной и аэрокосмической отраслях промышленности).

FORSTAR®

Телефон: 8 (812) 309-75-97 (многоканальный)
Факс: 8 (812) 320-03-32
Электронная почта: ocean@oceanchips.ru
Web: http://oceanchips.ru/
Адрес: 198099, г. Санкт-Петербург, ул. Калинина, д. 2, корп. 4, лит. А